BROADBENT
8 West Pacific Ave., Henderson, NV 89015
[T] 702-563-0600 [F] 702-563-0610
broadbentinc.com

July 21, 2025 Project No. 23-01-200

Alan Pineda, PE
Professional Engineer
Bureau of Industrial Site Cleanup
Nevada Division of Environmental Protection
375 E. Warm Springs Rd., Ste. 200
Las Vegas, NV 89119

Attn: Mr. Pineda

Re: **Modification No. 7 to the Remedial Design Report**
Hydro Pit Liner, Revision 1
Three Kids Mine, Henderson, Nevada

Dear Mr. Pineda:

Broadbent & Associates, Inc. (Broadbent) is pleased to submit this revised modification to the *Remedial Design Report, Revision 1* for the Three Kids Mine located in Henderson, Nevada.

Please do not hesitate to contact us if you should have any questions or require additional information.

Sincerely,
BROADBENT & ASSOCIATES, INC.

Kirk Stowers, CEM
Principal Geologist

CC:
JD Dotchin, NDEP
Joe McGinley, McGinley & Associates, Inc.
Caitlin Jelle, McGinley & Associates, Inc.
Ann Verwiel, ToxStrategies
Robert Unger, Lakemoor Ventures LLC
Mindy Unger-Wadkins, Lakemoor Ventures LLC
Leo Drozdoff, Drozdoff Group, LLC
Karen Gastineau, Broadbent & Associates, Inc.
Christene Klimek, City of Henderson
Sean Robertson, City of Henderson
Stephanie Garcia-Vause, City of Henderson
Anthony Molloy, City of Henderson
Quincy Edwards, Pulte Group
Doug Adair, Pulte Group
Paul Kenner, on behalf of Pulte Group
Michael Ford, Snell & Wilmer
Brad Cahoon, Dentons
Bryan Douglass, Douglass, Inc.
Charles M. Damus, Laker Development, LLC
Darryn Padfield, River Mountain Bike Shop
David Grossheim, Laker Plaza, Inc.
Frank Sator, Laker Development, LLC
Laird Sanders, Lake Mead Boat Storage
Rhonda Sanders, Lake Mead Boat Storage
Tyler Cahoon, Dentons

Modification No. 7 to the Remedial Design Report, Revision 1
Hydro Pit Liner, Revision 1
Three Kids Mine
Henderson, Nevada

JURAT: I, Karen Gastineau, certify that I am responsible for the services in this document and for the preparation of this document. The services described in this document have been provided in a manner consistent with the current standards of the profession and to the best of my knowledge comply with all applicable federal, State, and local statutes, regulations, ordinances, and the requirements of the Mine Remediation and Reclamation Agreement and Administrative Order on Consent for the Three Kids Mine Site.

Karen Gastineau

Karen Gastineau
Senior Hydrogeologist
CEM #2468 (4/1/2027)

July 21, 2025
Date

BROADBENT

TECHNICAL MEMORANDUM

To: Alan Pineda, Nevada Division of Environmental Protection

From: Karen Gastineau, Broadbent & Associates, Inc.

Subject: Modification No. 7 to the Remedial Design Report
Hydro Pit Liner, Revision 1
Three Kids Mine Site, Henderson, Nevada

Date: July 21, 2025

This Technical Memorandum presents Modification No. 7 to the *Remedial Design Report, Revision 1* dated March 4, 2024 (Remedial Design Report) for the Three Kids Mine Site (Site) in Henderson, Nevada. This modification presents changes to the Hydro Pit liner design.

Hydro Pit Liner Redesign

The Hydro Pit liner design in the Remedial Design Report is depicted in Figure G-15, and Figure G-16 depicts the elevation with the two feet of cover as required by the Record of Decision (Nevada Division of Environmental Protection [NDEP] 2023). The original design conceptualized that the entire Hydro Pit would be filled with a tailings-waste rock mixture; however, the actual volume of tailings excavated and the waste rock required for compaction did not fill the Hydro Pit to its rim. Additionally, planned stormwater infrastructure previously included a detention basin over the Hydro Pit liner, but the future development's stormwater system no longer includes a detention basin over the Hydro Pit.

To allow for a thicker cover above the liner which will provide greater protection of the liner, a redesigned liner was created and presented herein. The lower liner elevation and increased cover thickness on top of the liner also allows for more flexibility with park design features for future development. The redesigned final grades over the Hydro Pit are depicted in GRD-1, the liner elevation is depicted in GRD-2, and six profiles of the backfilled Hydro Pit, liner, and cover are presented as PROF-1 through PROF-6. Figure G-17 from the Remedial Design Report was also revised to clarify the anchor trench design.

Attachments

GRD-1	Community Park C Grading Plan
GRD-2	Hydro Pit Liner Grading Plan
PROF-1	Hydro Pit Liner and Park Profile 1
PROF-2	Hydro Pit Liner and Park Profile 2
PROF-3	Hydro Pit Liner and Park Profile 3
PROF-4	Hydro Pit Liner and Park Profile 4
PROF-5	Hydro Pit Liner and Park Profile 5
PROF-6	Hydro Pit Liner and Park Profile 6
Figure G-17 (Rev 2)	Hydro Pit Liner Details
A	Responses to NDEP Comments

References

Broadbent. 2024. Remedial Design Report, Revision 1, Three Kids Mine, Henderson, Nevada. March 4.

NDEP. 2023. Record of Decision, Three Kids Mine, Henderson, Nevada. September.

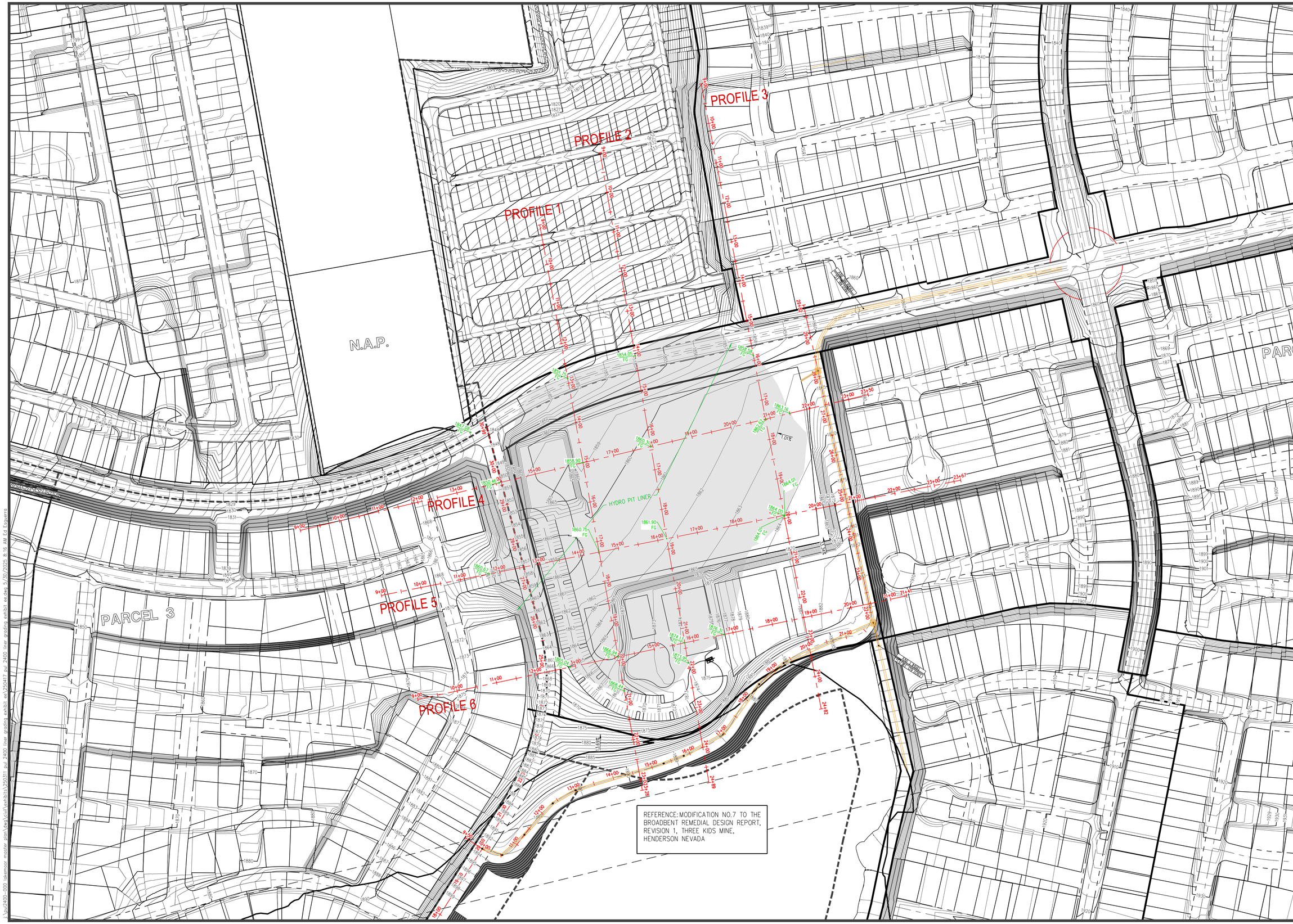

Westwood

Phone (702) 284-5300

5725 W. Badura Ave.
Suite 100
Las Vegas, NV 89118
westwoodps.com

Westwood Professional Services, Inc.

NO.	DESCRIPTION	DATE	BY	APP. DATE	APP.

LAKEMOOR
COMMUNITY PARK C GRADING PLAN
EXHIBIT

DATE: 5/30/25
DRAFTER: EE
DESIGNER: EE
CHECKED: DY

PROJECT NO.
PUL2400

PROFESSIONAL ENGINEER — STATE OF NEVADA
DERICK J. YORO
Exp: 06/30/2026
PROJECT No. 16396
5/30/25

GRD-1
SHEET 1

\\pul2400-2000 lakemoor master plan\dwg\civil\exhibits\250311 pul 2400 inter grading exhibit ee.dwg 5/30/2025 8:16 AM Eli Esquerra

Westwood

Phone (702) 284-5300

5725 W. Badura Ave.
Suite 100
Las Vegas, NV 89118

westwoodps.com

Westwood Professional Services, Inc.

NO.	DESCRIPTION	DATE	BY	APP. DATE	APP.

LAKEMOOR

HYDRO PIT LINER GRADING PLAN EXHIBIT

DATE: 5/30/25

DRAFTER: EE

DESIGNER: EE

CHECKED: DY

PROJECT NO.
PUL2400

PROFESSIONAL ENGINEER - STATE OF NEVADA
DERICK Y. YORO
Exp: 06/30/2026
PROJECT No. 16396

5/30/25

GRD-2
SHEET 2

h:\pul2400-000 lakemoor master plan\dwg\civil\exhibits\250311 pul 2400 inter grading exhibit ee.dwg 5/30/2025 8:16 AM Eli Esquerra

PROFILE 1

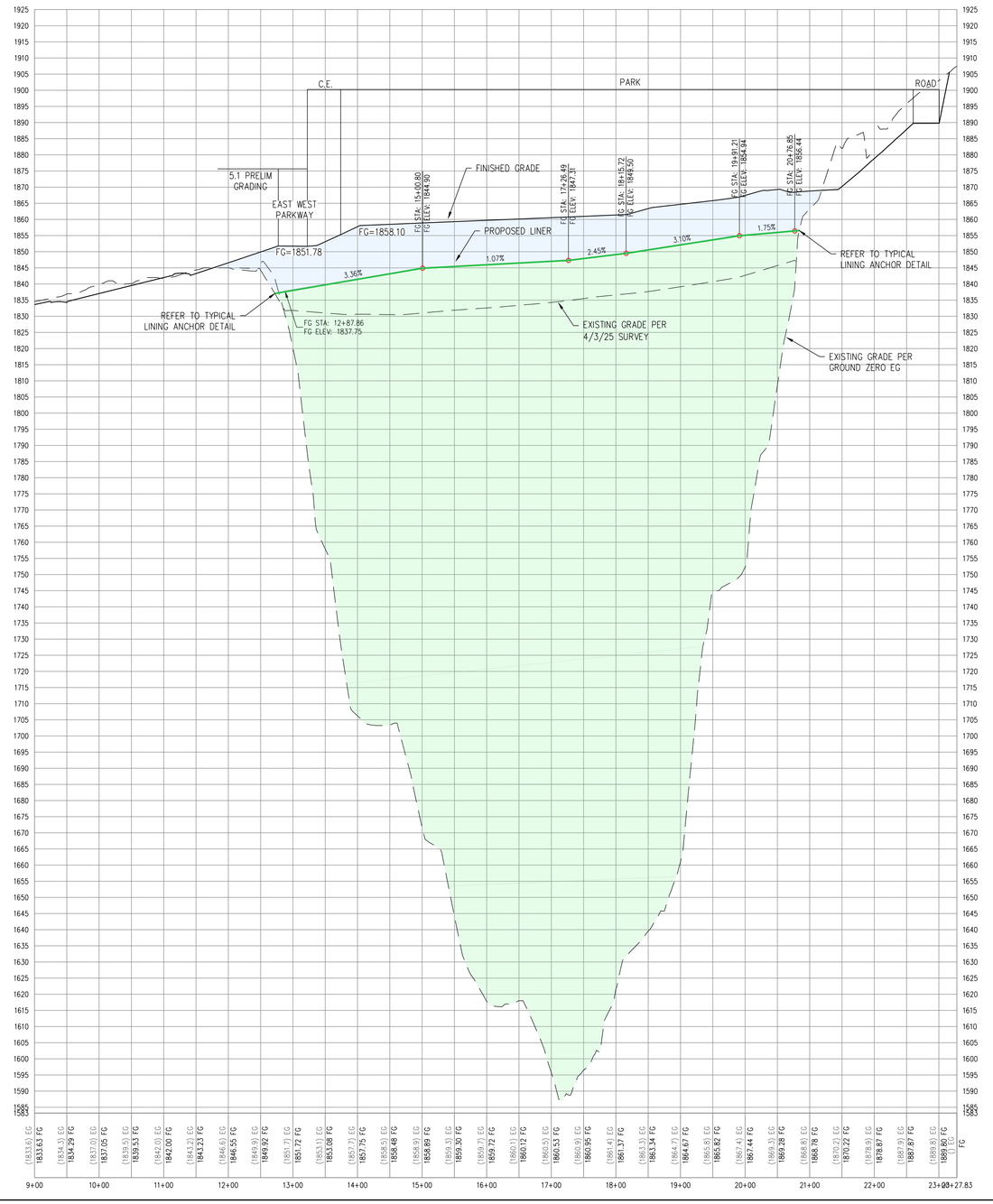

HORZ: 1" = 100'
VERT: 1" = 20'

SCALE – 1"=100' 0 100 200 FEET

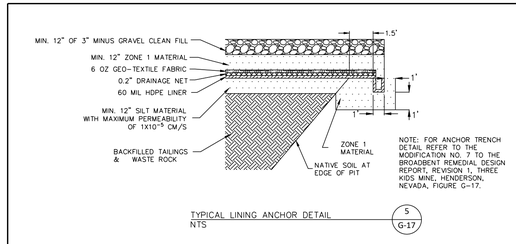

TYPICAL LINING ANCHOR DETAIL
NTS

S
G-17

Westwood
Phone (702) 284-5300
5725 W. Badura Ave.
Suite 100
Las Vegas, NV 89118
westwoodps.com
Westwood Professional Services, Inc.

NO.	DESCRIPTION	DATE	BY	APP. DATE	APP.

LAKEMOOR

HYDRO PIT LINER AND PARK PROFILE 1

EXHIBIT

DATE: 5/30/25
DRAFTER: EE
DESIGNER: EE
CHECKED: DY
PROJECT NO.
PUL2400

PROFESSIONAL ENGINEER – STATE OF NEVADA
DERICK Y. YONO
Exp: 06/30/2026
No. 16398
5/30/25

PROF-1
SHEET 3

J:\pul2400-000 lakemoor master plan\dwg\civil\exhibits\250311 pul 2400 liner grading exhibit ee\250417 pul 2400 liner grading exhibit ee.dwg 5/30/2025 8:17 AM Ed Esquerra

PROFILE 2

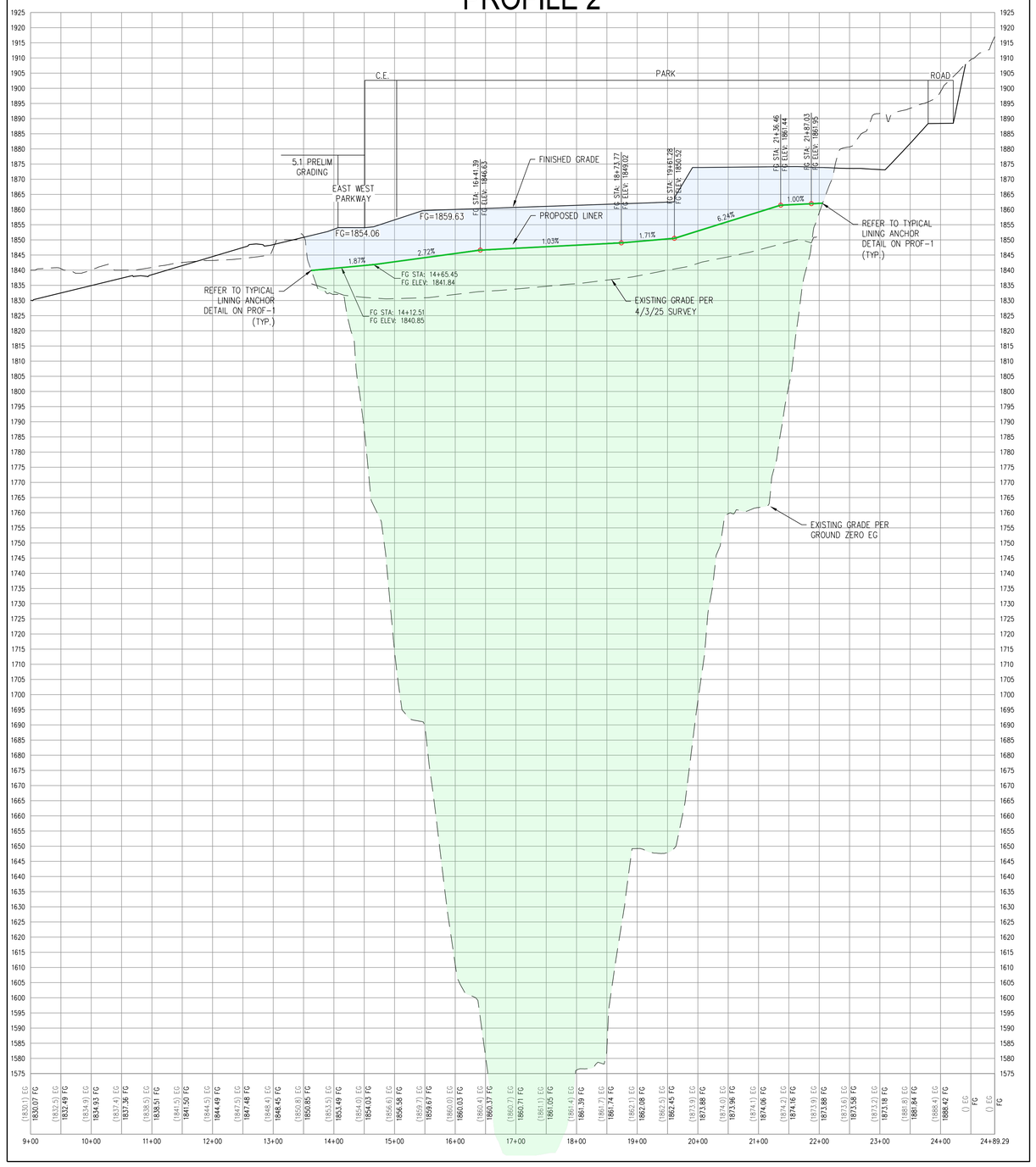

HORZ: 1" = 100'
VERT: 1" = 20'

SCALE → 1"=100' (0, 100, 200 FEET)

Westwood
Phone (702) 284-5300
5725 W. Badura Ave.
Suite 100
Las Vegas, NV 89118
westwoodps.com
Westwood Professional Services, Inc.

NO.	DESCRIPTION	DATE	BY	APP. DATE	APP.

LAKEMOOR

HYDRO PIT LINER AND PARK PROFILE 2

EXHIBIT

DATE: 5/30/25
DRAFTER: EE
DESIGNER: EE
CHECKED: DY
PROJECT NO. PUL2400

PROFESSIONAL ENGINEER STATE OF NEVADA
DERICK J. YORO
Exp: 06/30/2026
No. 16396
5/30/25

PROF-2
SHEET 4

z:\pul2400-000 lakemoor master plan\dwg\civil\exhibits\250311 pul 2400 liner grading exhibit ee.dwg 5/30/2025 8:17 AM Ed Esquerra

PROFILE 3

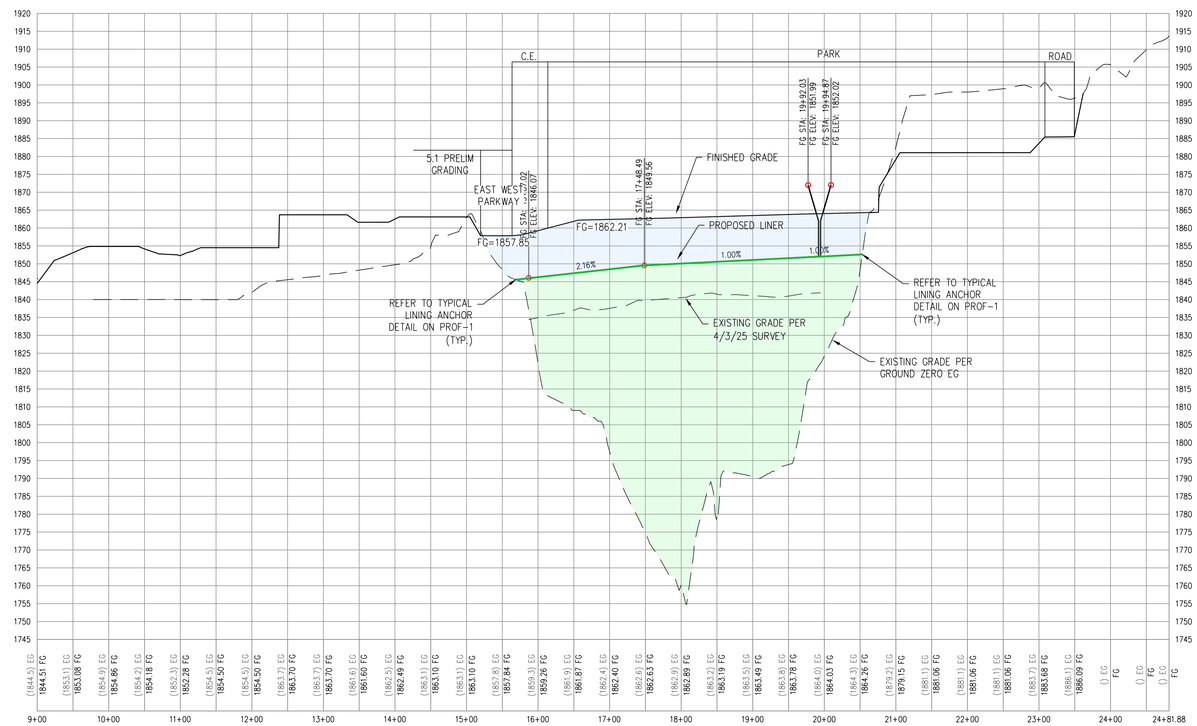

HORZ: 1" = 100'
VERT: 1" = 20'

SCALE – 1"=100' 0 100 200 FEET

z:\pul2400-000 lakemoor master plan\dwg\civil\exhibits\250311 pul 2400 inter grading exhibit ee.\250417 pul 2400 inter grading exhibit ee.dwg 5/30/2025 8:18 AM Ed Esguerra

Westwood
Phone (702) 284-5300
5725 W. Badura Ave.
Suite 100
Las Vegas, NV 89118
westwoodps.com
Westwood Professional Services, Inc.

NO.	DESCRIPTION	DATE	BY	APP. DATE	APP.

LAKEMOOR

HYDRO PIT LINER AND PARK PROFILE 3

EXHIBIT

DATE: 5/30/25
DRAFTER: EE
DESIGNER: EE
CHECKED: DY

PROJECT NO.
PUL2400

PROFESSIONAL ENGINEER – STATE OF NEVADA
DERICK J. YORO
Exp: 06/30/2026
PROF. No. 16396
5/30/25

PROF-3
SHEET 5

PROFILE 4

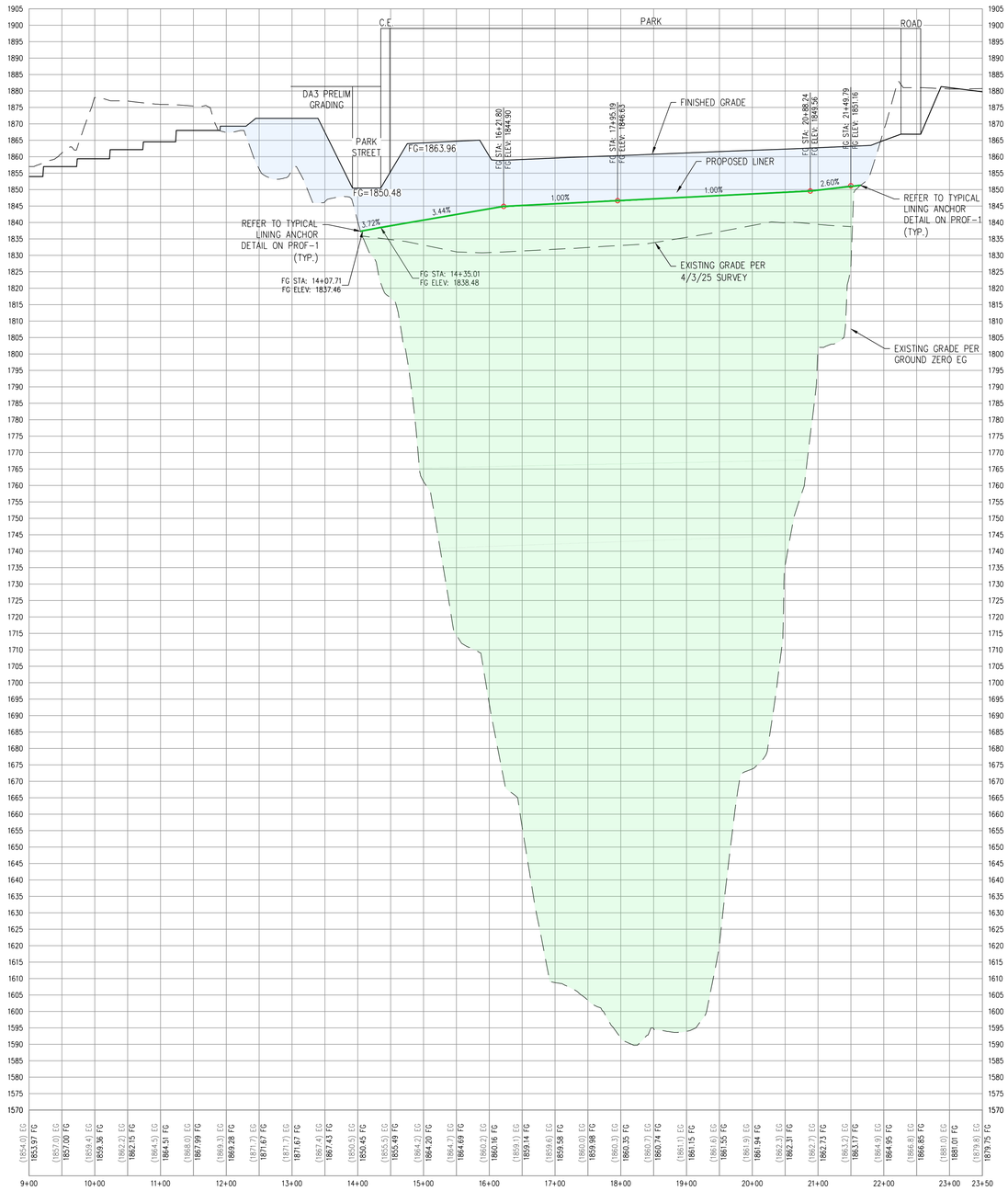

HORZ: 1" = 100'
VERT: 1" = 20'

0 100 200
SCALE - 1"=100' FEET

Westwood
Phone (702) 284-5300
5725 W. Badura Ave.
Suite 100
Las Vegas, NV 89118
westwoodps.com
Westwood Professional Services, Inc.

NO.	DESCRIPTION	DATE	BY	APP. DATE	APP.

LAKEMOOR

HYDRO PIT LINER AND PARK PROFILE 4

EXHIBIT

DATE: 5/30/25
DRAFTER: EE
DESIGNER: EE
CHECKED: DY

PROJECT NO.
PUL2400

PROFESSIONAL ENGINEER - STATE OF NEVADA
DERICK J. YORO
Exp: 06/30/2026
No. 16398

5/30/25

PROF-4
SHEET 6

J:\pul2400-000 lakemoor master plan\dwg\civil\exhibits\250531 pul 2400 liner grading exhibit ee\250417 pul 2400 liner grading exhibit ee.dwg 5/30/2025 8:18 AM Ed Esquerra

PROFILE 5

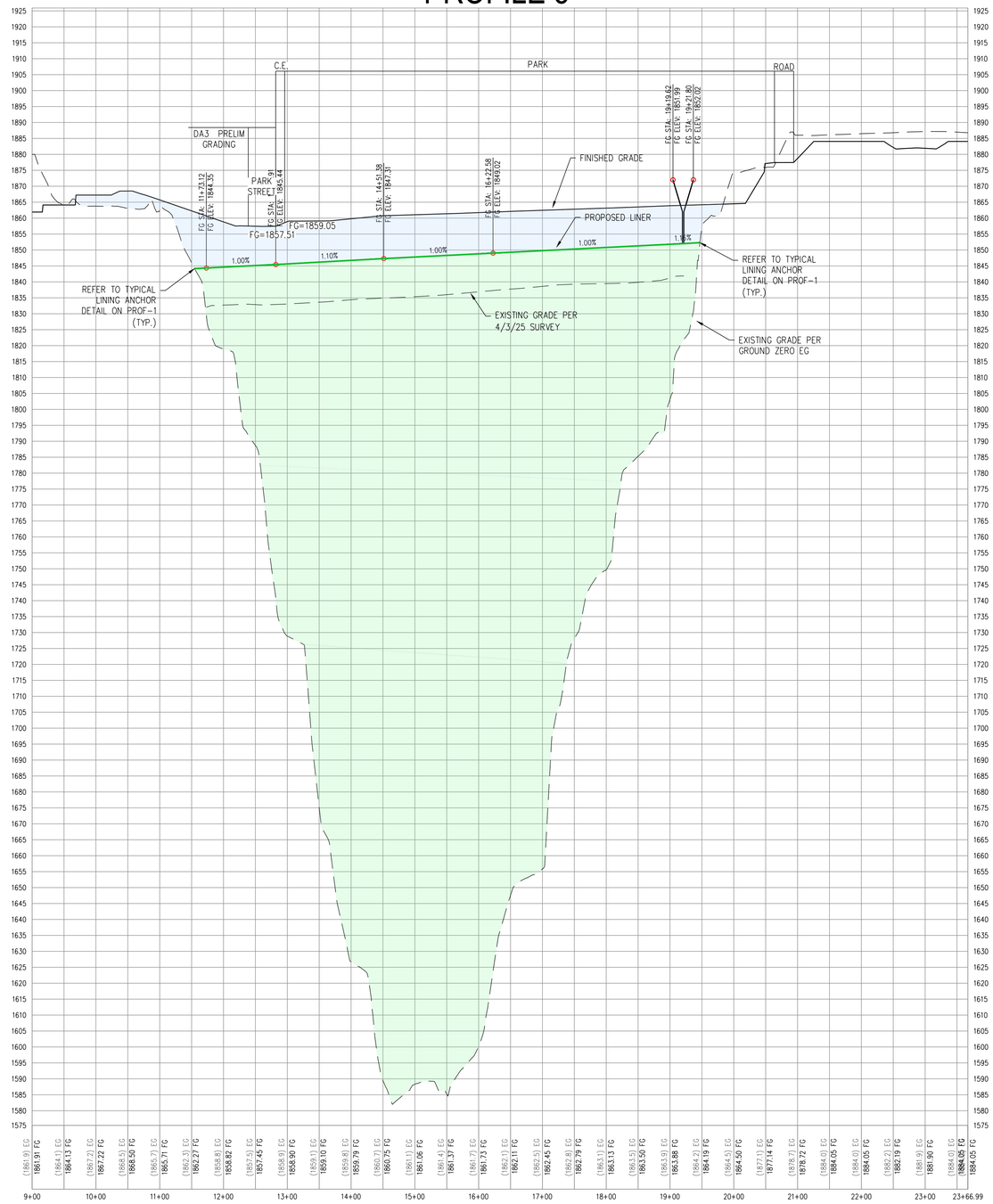

HORZ: 1" = 100'
VERT: 1" = 20'

0 100 200
SCALE - 1"=100' FEET

Westwood
Phone (702) 284-5300
5725 W. Badura Ave.
Suite 100
Las Vegas, NV 89118
westwoodps.com
Westwood Professional Services, Inc.

NO.	DESCRIPTION	DATE	BY	APP. DATE	APP.

LAKEMOOR

HYDRO PIT LINER AND PARK PROFILE 5

EXHIBIT

DATE: 5/30/25
DRAFTER: EE
DESIGNER: EE
CHECKED: DY

PROJECT NO.
PUL2400

PROFESSIONAL ENGINEER - STATE OF NEVADA
DERICK Y. YONO
Exp: 06/30/2026
CIVIL
No. 15396

5/30/25

PROF-5
SHEET 7

J:\pul2400-000 lakemoor master plan\dwg\civil\exhibits\250311 pul 2400 liner grading exhibit ee\250417 pul 2400 liner grading exhibit ee.dwg 5/30/2025 8:18 AM Ed Esquerra

PROFILE 6

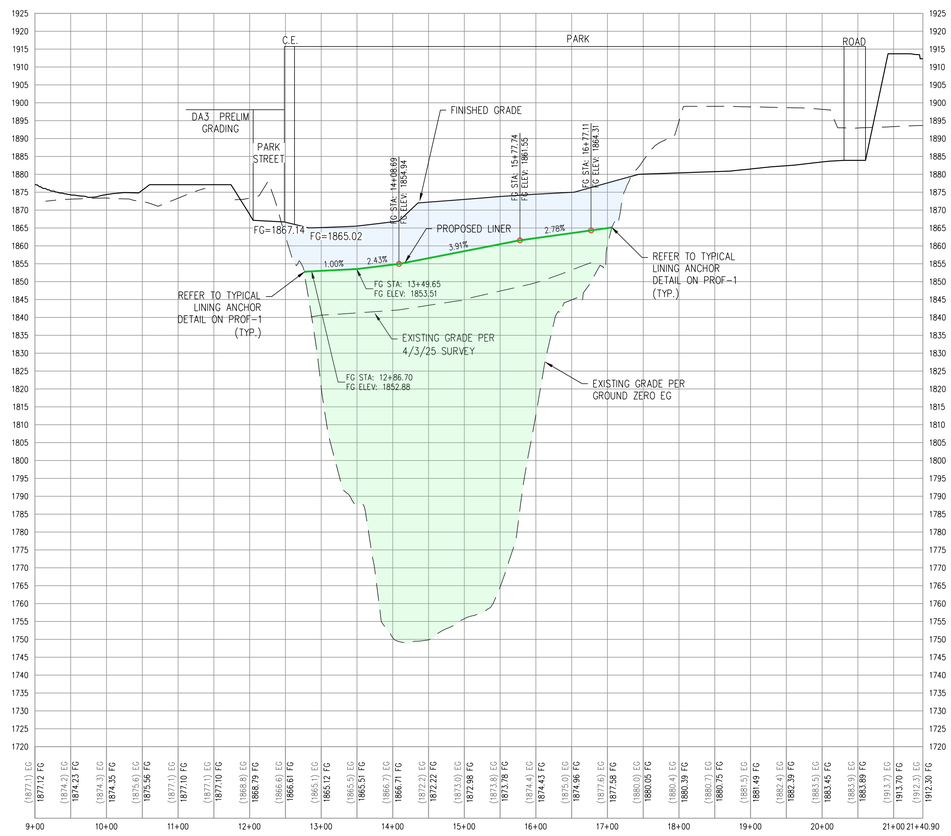

HORZ: 1" = 100'
VERT: 1" = 20'

0 100 200
SCALE - 1"=100' FEET

NO.	DESCRIPTION	DATE	BY	APP. DATE	APP.

Westwood
Phone (702) 284-5300
5725 W. Badura Ave.
Suite 100
Las Vegas, NV 89118
westwoodps.com
Westwood Professional Services, Inc.

LAKEMOOR

HYDRO PIT LINER AND PARK PROFILE

EXHIBIT

DATE: 5/30/25
DRAFTER: EE
DESIGNER: EE
CHECKED: DY
PROJECT NO.
PUL2400

PROFESSIONAL ENGINEER - STATE OF NEVADA
DERICK J. Y. YONO
Exp: 06/30/2026
CIVIL
No. 16396
5/30/25

PROF-6
SHEET 8

J:\pul2400-000 lakemoor master plan\dwg\civil\exhibits\250311 pul 2400 liner grading exhibit ee\250417 pul 2400 liner grading exhibit ee.dwg 5/30/2025 8:18 AM Ed Esquerra

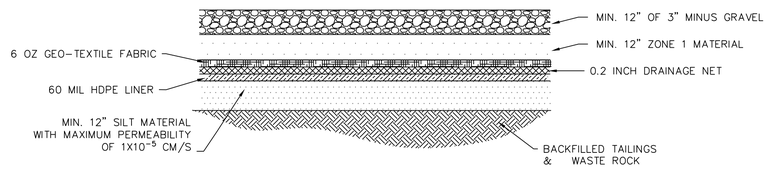

TYPICAL LINING SYSTEM
NTS
1 G-17

CONSTRUCTION NOTES

1. ZONE 1 MATERIAL SHALL BE PROCESSED OR NATURAL MATERIAL WITH 100% PASSING A $\frac{3}{4}$" SIEVE. NO CRUSHED STONE, PARTICLES MUST BE SUB-ANGULAR TO ROUNDED AND FREE OF ORGANICS AND DEBRIS OF ANY KIND. UNIFORMITY COEFFICIENT OF 1.9 TO 2.4 AND COMPACTED TO 95% PER ASTM D1557.
2. ZONE 3 MATERIAL SHALL BE PROCESSED OR NATURAL MATERIAL WITH 100% PASSING A $\frac{3}{8}$" SIEVE AND 100% RETAINED ON THE $\frac{1}{8}$" SIEVE. NO CRUSHED STONE, PARTICLES MUST BE SUB-ANGULAR TO ROUNDED AND FREE OF ORGANICS AND DEBRIS OF ANY KIND. UNIFORMITY COEFFICIENT OF 1.9 TO 2.4
3. THE CONTRACTOR SHALL BACKFILL AND FINAL GRADE ALL CUT OR FILL SLOPES TO MATCH EXISTING CONDITIONS TO THE SATISFACTION OF THE ENGINEER.
4. THE CONTRACTOR IS RESPONSIBLE FOR ALL CONSTRUCTION SURVEYING. ANY DEVIATIONS FROM EXISTING GRADES AS SHOWN ON THE PLANS SHALL BE IMMEDIATELY REPORTED TO THE ENGINEER.
5. AREAS OF STOCKPILED MATERIALS WITHIN THE CONSTRUCTION AREA ARE TO BE TREATED IN SUCH A MANNER AS TO PREVENT MOVEMENT OR EROSION RESULTING FROM WIND CONDITIONS OR RAINFALL. THE CONTRACTOR IS TO SWEEP ON A DAILY BASIS ROADWAYS THAT ARE ALONG ITS ROUTES AND IMMEDIATELY CLEAN UP MUD THAT FALLS ON ANY PAVEMENT OUTSIDE OF ITS LIMITS OF CONSTRUCTION OR HAULING ACTIVITIES.
6. SOILS PREPARATION SHALL CONFORM TO THE REQUIREMENTS OF THE GEOTECHNICAL REPORT FOR FORMER THREE KIDS MINE SITE, CENTURY CONSULTANTS, JOB NUMBER 22004 AUGUST 19, 2022.
7. IMPERMEABLE LAYER CONSISTS OF SILT/CLAY MATERIAL WITH A PLACED PERMEABILITY OF NO GREATER THAN 1X10^{-5} CM/S.
8. FINAL DEPTHS AND ELEVATIONS TO BE PROPOSED BY CONTRACTOR AND APPROVED BY ENGINEER PRIOR TO PLACEMENT.

2

3

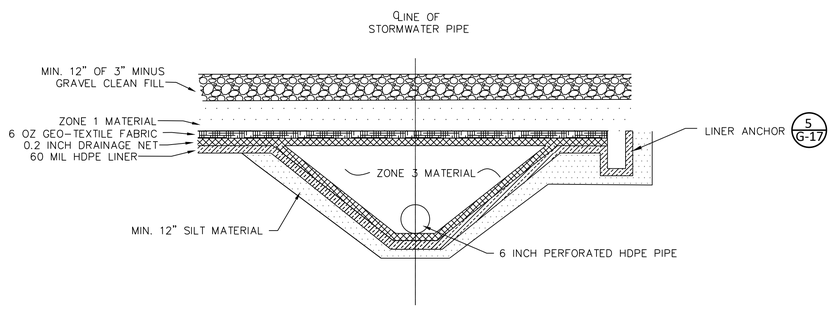

STORMWATER COLLECTION PIPE
NTS
2 G-17

2

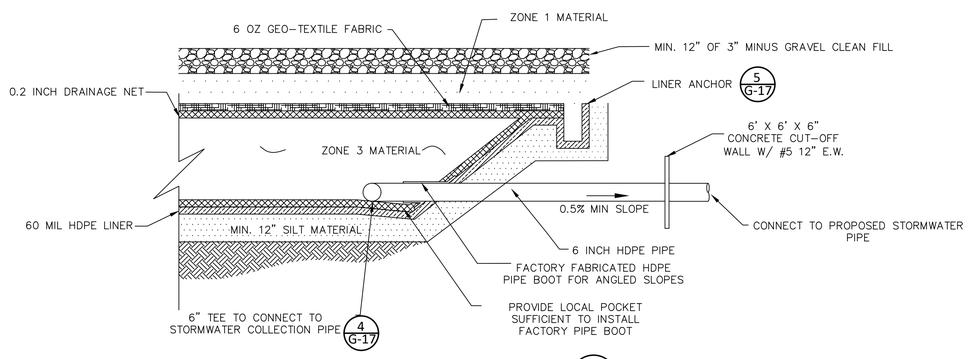

STORMWATER OUTLET PIPE
NTS
3 G-17

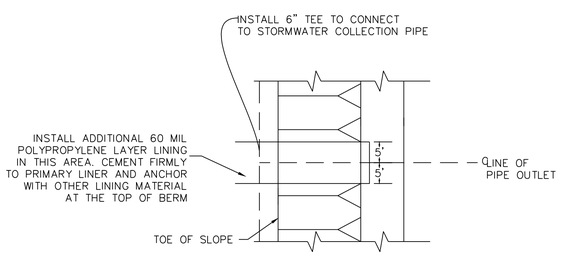

PIPE OUTLET DETAIL
NTS
4 G-17

2

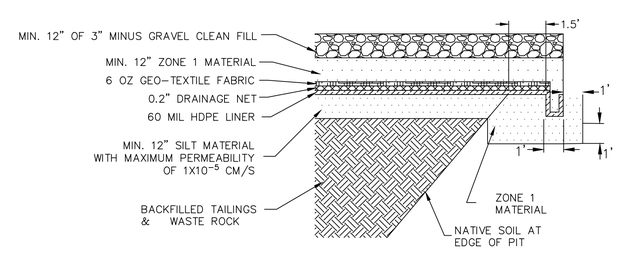

TYPICAL LINING ANCHOR DETAIL
NTS
5 G-17

G-15,16,17 - HYDRO PIT LINER, FINAL GRADING PLAN, AND DETAILS - LINER DESIGN AND SUBDRAIN SYSTEM PROVIDED.

REV	DATE	BY	DESCRIPTION
1	03/11/25	CAC	ANCHOR TRENCH UPDATE
2	06/27/25	CAC	ANCHOR TRENCH UPDATE
3	07/18/25	CAC	ANCHOR TRENCH UPDATE

LAKEMOOR VENTURES, LLC
921 AMERICAN PACIFIC DRIVE, SUITE 305
HENDERSON, NV 89014

BROADBENT
8 WEST PACIFIC AVENUE
HENDERSON, NEVADA, 89015
(702) 563-0600 (P) ● (702) 563-0610 (F)

COPYRIGHT © 2023 BY BROADBENT & ASSOCIATES, INC.
ALL RIGHTS RESERVED

PROJECT NUMBER: 14-01-156
SCALE: NTS
DESIGNED BY: CAC
DRAWN BY: TM
CHECKED BY: CAC

HYDRO PIT LINER DETAILS

REMEDIAL DESIGN TO IMPLEMENT CORRECTIVE ACTION PLAN SOIL AND MINE WASTES THREE KIDS MINE

SEAL
PROFESSIONAL ENGINEER - STATE OF NEVADA
CHRISTOPHER A. CARRIER
Exp: 12-31-26
CIVIL
No. 24060
7-18-25

FIGURE
G-17
17 OF 23 SHEETS

Z:\JOBS\2014\14-01-156 3 KIDS MINE\DRAWINGS\CAD FILES OF FINAL DRAWINGS\HYDRO PIT LINER 03-11-25.DWG
July 18, 2025

ATTACHMENT A

Responses to NDEP Comments made on June 30, 2025

to Modification No. 7 to the Remedial Design Report – Hydro Pit Liner, dated June 2, 2025

1. **General Comment #1** – Details 2 and 3 in Figure G-17 include the following text, respectively: "2.4' BELOW FINISHED GRADE OF LINER" and "2.4' BELOW FINISHED GRADE." These values should be updated to reflect the new elevations.

   The values in Details 2 and 3 showing depth from ground surface to the bottom of the silt material are variable, depending on the thickness of cover placed in the new design. As a result, the text ""2.4' BELOW FINISHED GRADE OF LINER" and "2.4' BELOW FINISHED GRADE" were removed from the figure. Depths can be inferred from attachments GRD-1 and GRD-2. Additionally, a note was added indicated that final depths and elevations to be proposed by the contactor will be approved by an engineer.

2. Detail 3 in Figure G-17 includes an arrow labeled as "ZONE 1 MATERIAL," but the arrow is pointing to the gravel above the Zone 1 material. The arrow should be extended to point to the Zone 1 material.

   Detail 3 in Figure G-17 was revised to extend the arrow labeling "ZONE 1 MATERIAL" to reach the intended layer.