DRAWING NUMBER	DRAWING TITLE
PL-TYP-001	TYPICAL STANDARD CONSTRUCTION ROW PROFILE
PL-TYP-008	TYPICAL ADDITIONAL WORKSPACE FOR OPEN-CUT WATERBODY CROSSING
PL-TYP-009	TYPICAL ADDITIONAL WORKSPACE FOR HDD WATERBODY CROSSING
PL-TYP-048	TYPICAL EQUIPMENT CLEANING STATION (SHT. 1 OF 2)
PL-TYP-049	TYPICAL EQUIPMENT CLEANING STATION (SHT. 2 OF 2)
PL-TYP-050	TYPICAL TRAFFIC CONTROL PLAN
PL-TYP-053	TYPICAL ACCESS DRIVE ACROSS SECTION
PL-TYP-055	TYPICAL LANDFILL OR OPEN CUT HEAVY WALL PIPE TRENCHING, BACKFILL & COMPACTION
PL-TYP-063	TYPICAL TYPE 1 AERIAL MARKER
PL-TYP-064	TYPICAL TYPE 2 PIPELINE MARKER
PL-TYP-065	TYPICAL TYPE 3 PIPELINE MARKER
BMP-TYP-001	TYPICAL SLOPE BREAKER WITH LONGITUDINAL & CROSS SLOPES (SHT. 1 OF 3)
BMP-TYP-002	TYPICAL SLOPE BREAKER WITH LONGITUDINAL & CROSS SLOPES (SHT. 2 OF 3)
BMP-TYP-003	TYPICAL SLOPE BREAKER WITH LONGITUDINAL & CROSS SLOPES (SHT. 3 OF 3)
BMP-TYP-004	TYPICAL TRENCH BREAKER REQUIREMENTS
BMP-TYP-005	TYPICAL MINI-TRENCH BREAKER
BMP-TYP-006	TYPICAL STRAW BALE DEWATERING STYRUCTURE LARGE VOLUME - OPTION 1 (SHT. 1 OF 2)
BMP-TYP-007	TYPICAL STRAW BALE DEWATERING STYRUCTURE LARGE VOLUME - OPTION 2 (SHT. 2 OF 2)
BMP-TYP-008	TYPICAL TEMPORARY SOIL CONTAINMENT BERM
BMP-TYP-009	TYPICAL EROSION CONTROL MATTING UPLAND SLOPES
BMP-TYP-010	TYPICAL EROSION CONTROL MATTING STREAMBANKS
BMP-TYP-011	TYPICAL RIPRAP AT WATERBODY BANKS (SHT. 1 OF 2)
BMP-TYP-012	TYPICAL RIPRAP AT WATERBODY BANKS (SHT. 2 OF 2)
BMP-TYP-013	TYPICAL HYDRO-MULCH & TACKIFIER
BMP-TYP-014	TYPICAL GEOTEXTILE FILTER BAG FOR DEWATERING
BMP-TYP-015	TYPICAL SILT FENCE SEDIMENT BARRIER (SHT. 1 OF 3)
BMP-TYP-016	TYPICAL SILT FENCE SEDIMENT BARRIER (SHT. 2 OF 3)
BMP-TYP-017	TYPICAL SILT FENCE SEDIMENT BARRIER (SHT. 3 OF 3)
BMP-TYP-018	TYPICAL STRAW BALE & SILT FENCE
BMP-TYP-019	TYPICAL STRAW BALE SEDIMENT BARRIER (SHT. 1 OF 2)
BMP-TYP-020	TYPICAL STRAW BALE SEDIMENT BARRIER (SHT. 2 OF 2)
BMP-TYP-021	TYPICAL STRAW BALE DEWATERING - SMALL VOLUME (SHT. 1 OF 2)
BMP-TYP-022	TYPICAL STRAW BALE DEWATERING - SMALL VOLUME (SHT. 2 OF 2)
BMP-TYP-023	TYPICAL SPLASH PUP FOR TEST WATER DISCHARGE
BMP-TYP-024	TYPICAL STRAW WATTLES CHANNEL
BMP-TYP-025	TYPICAL LOG WATTLES SLOPE INTERUPTION
BMP-TYP-026	TYPICAL CURLEX SEDIMENT LOGS CHANNEL
BMP-TYP-027	TYPICAL CHECK DAM
25020-PL-800	TYPICAL AIR/VACUUM ASSEMBLY DETAIL

REV	REVISION DESCRIPTION	DATE	BY	CHK	APP
A	ISSUED FOR PERMITTING	--/--/--	PGH	SMH	BWY

This document is copyrighted and is an instrument of service by Samuel Engineering (SE). It was prepared solely for the Owner's/Client's use on this project only. Use, copy or disclosure of any information shown, in whole or in part, without SE's consent, is strictly prohibited, is a copyright breach and may be prosecuted. Any unauthorized reuse shall be at the sole risk of the user.

SAMUEL ENGINEERING
WE PROVIDE SOLUTIONS
8450 E. Crescent Parkway, Suite 200
Greenwood Village, CO 80111
Phone: 303.714.4840
Fax: 303.714.4800
Web: samuelengineering.com

TYPICAL
DRAWING INDEX
PAGE 1 OF 2

DRAWING NUMBER

INDEX

REV A

CAD File: S:\Projects\25020_Equinox_Pipeline\CAD\Pipeline\Drawings\Typicals\EQUINOX-TYPICALS.dwg
Plot Date: Tuesday, June 9, 2026 6:52:12 AM Plotted By: Jeff Schilz
Monochrome.ctb

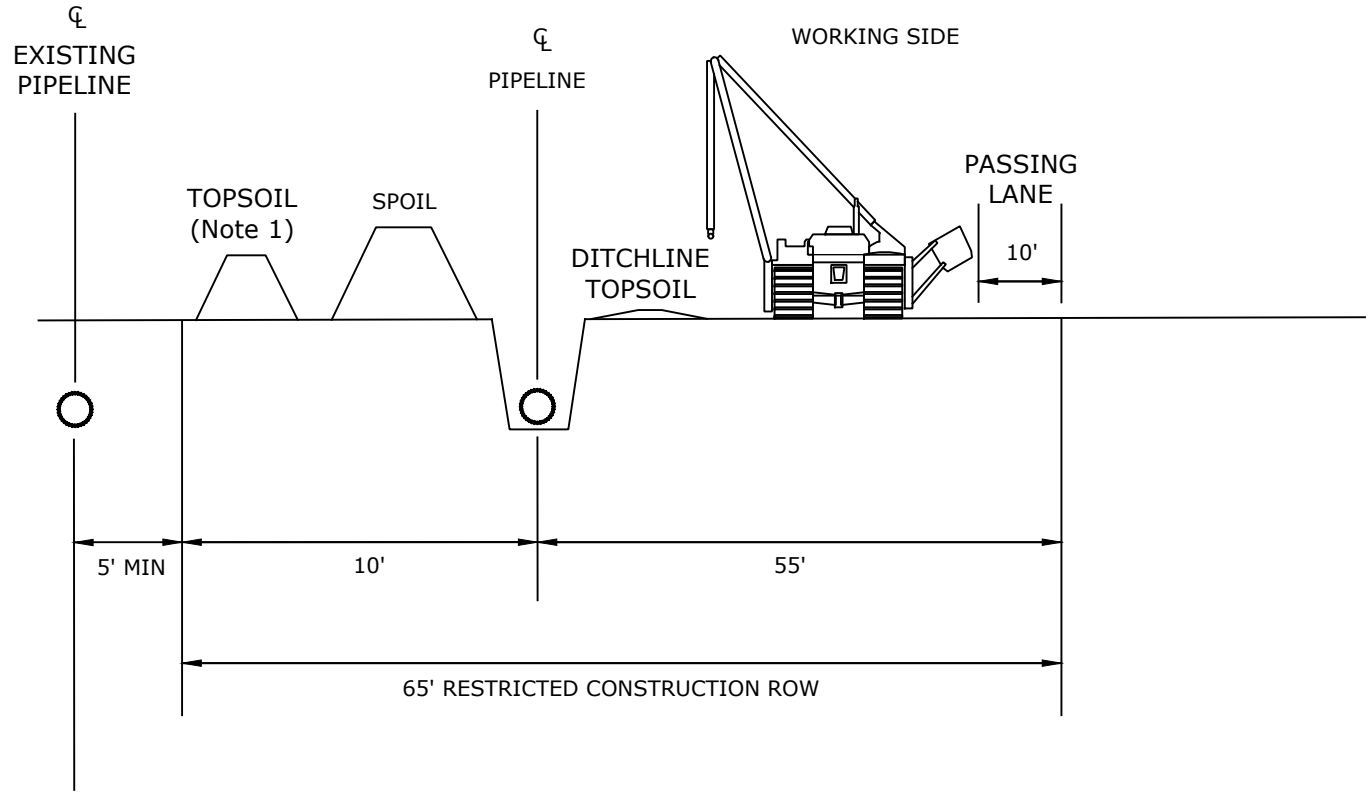

NOTES:

1. THIS IS AN ALTERNATE TOPSOIL LOCATION FOR THE DITCH LINE TOPSOIL DEPENDING UPON THE CONDITIONS ENCOUNTERED IN THE FIELD DURING CONSTRUCTION.

REV	REVISION DESCRIPTION	DATE	BY	CHK	APP
A	ISSUED FOR PERMITTING	--/--/--	PGH	SMH	BWY

This document is copyrighted and is an instrument of service by Samuel Engineering (SE). It was prepared solely for the Owner's/Client's use on this project only. Use, copy or disclosure of any information shown, in whole or in part, without SE's consent, is strictly prohibited, is a copyright breach and may be prosecuted. Any unauthorized reuse shall be at the sole risk of the user.

SAMUEL ENGINEERING
WE PROVIDE SOLUTIONS
8450 E. Crescent Parkway, Suite 200
Greenwood Village, CO 80111
Phone: 303.714.4840
Fax: 303.714.4800
Web: samuelengineering.com

PIPELINE TYPICAL
STANDARD CONTRUCTION
ROW PROFILE

DRAWING NUMBER
PL-TYP-001
REV A

CAD File: S:\Projects\25020_Equinox_Pipeline\CAD\Pipeline\Drawings\Typicals\EQUINOX-TYPICALS.dwg
Plot Date: Tuesday, June 9, 2026 6:52:13 AM Plotted By: Jeff Schilz
Monochrome.ctb

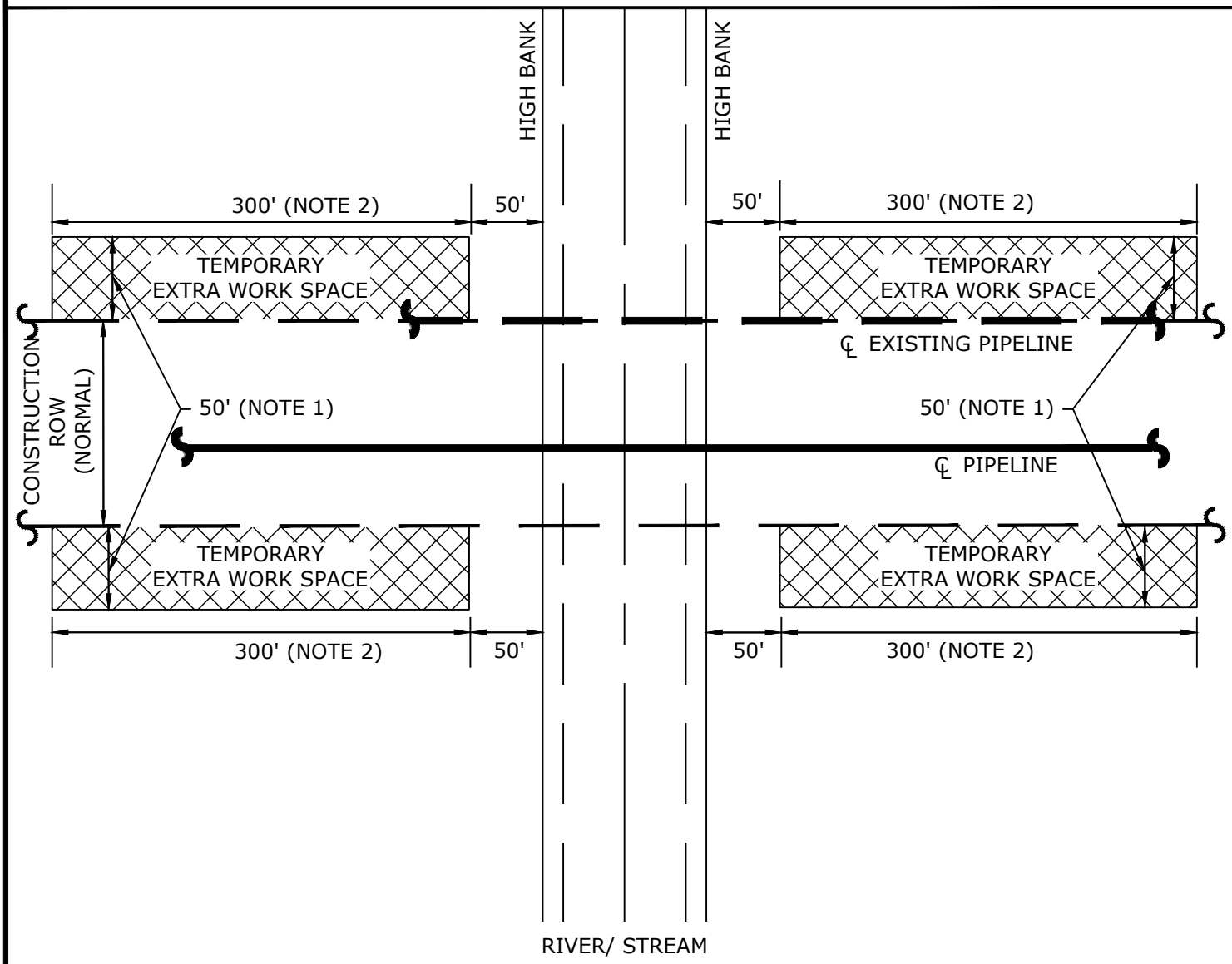

NOTES:

1. 50' IS THE MINIMUM THAT WOULD BE REQUIRED. IF THE CROSSING IS 100' OR LONGER THIS WIDTH REQUIREMENT INCREASES TO 100'.

2. 300' IS THE MINIMUM THAT WOULD BE REQUIRED. IF THE CROSSING IS LONGER THAN 100' THIS LENGTH WILL INCREASE AS THE LENGTH CROSSING LENGTH INCREASES.

3. IF TEMPORARY WORKSPACE OVERLAPS EXISTING UTILITIES ADDITIONAL COVER MAY BE REQUIRED AS SPECIFIED IN THE CONSTRUCTION SPECIFICATIONS AND PL-TYP 22 - 24.

4. REFER TO ALIGNMENT SHEETS FOR PROJECT SPECIFIC WORKSPACE LOCATIONS AND DIMENSIONS.

5. REQUESTS FOR ADDITIONAL WORKSPACE NOT SHOWN ON ALIGNMENT SHEETS SHALL BE SUBMITTED TO COMPANY THROUGH AN RFI.

REV	REVISION DESCRIPTION	DATE	BY	CHK	APP
A	ISSUED FOR PERMITTING	--/--/--	PGH	SMH	BWY

This document is copyrighted and is an instrument of service by Samuel Engineering (SE). It was prepared solely for the Owner's/Client's use on this project only. Use, copy or disclosure of any information shown, in whole or in part, without SE's consent, is strictly prohibited, is a copyright breach and may be prosecuted. Any unauthorized reuse shall be at the sole risk of the user.

SAMUEL ENGINEERING
WE PROVIDE SOLUTIONS
8450 E. Crescent Parkway, Suite 200
Greenwood Village, CO 80111
Phone: 303.714.4840
Fax: 303.714.4800
Web: samuelengineering.com

PIPELINE TYPICAL
ADDITIONAL WORKSPACE FOR OPEN-CUT
WATERBODY CROSSING

DRAWING NUMBER
PL-TYP-008
REV A

CAD File: S:\Projects\25020_Equinox_Pipeline\CAD\Pipeline\Drawings\Typicals\EQUINOX-TYPICALS.dwg
Plot Date: Tuesday, June 9, 2026 6:52:18 AM Plotted By: Jeff Schilz
Monochrome.ctb

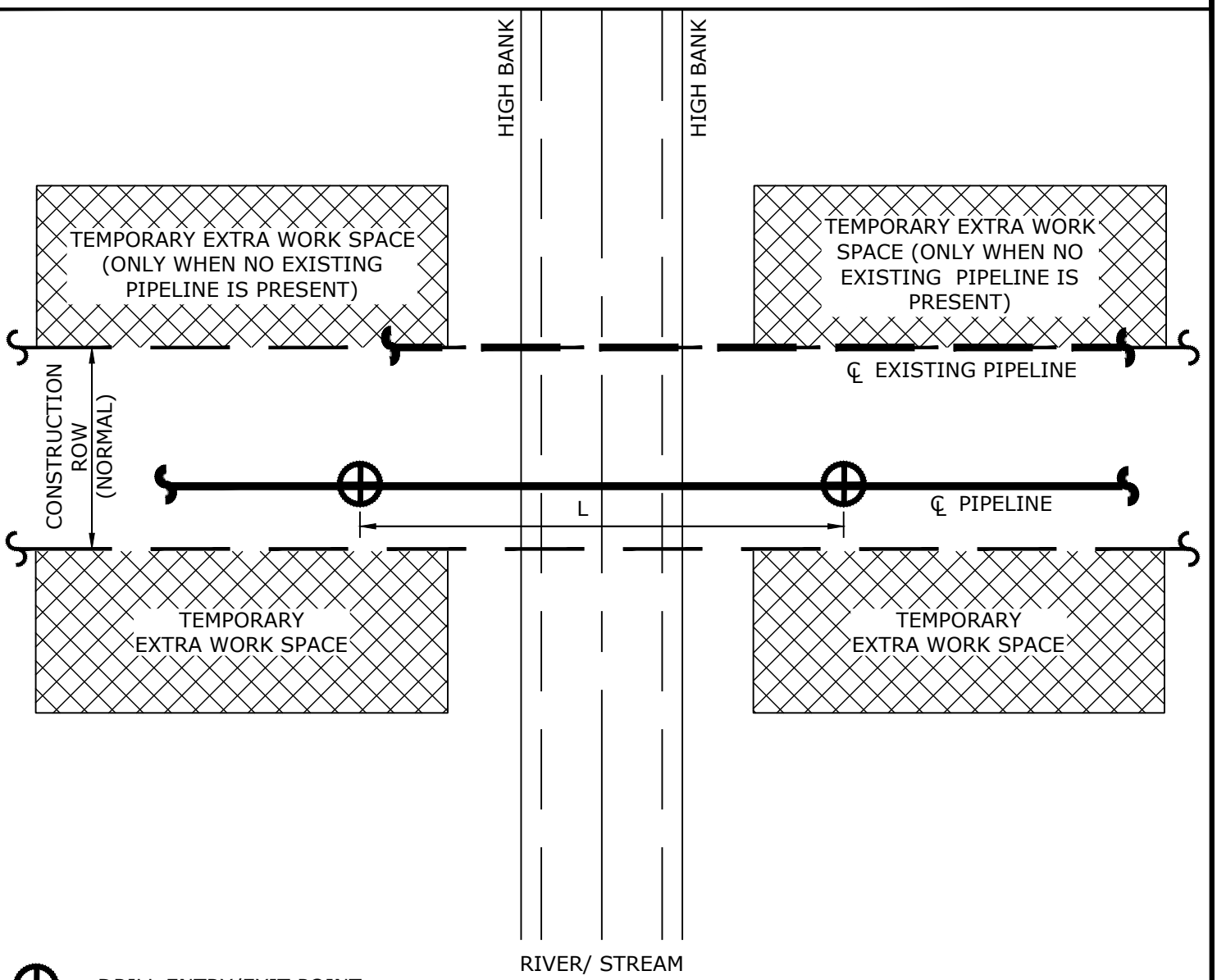

⊕ = DRILL ENTRY/EXIT POINT

L = LENGTH BETWEEN DRILL ENTRY AND EXIT POINTS.

NOTES:

1. IF TEMPORARY WORKSPACE OVERLAPS EXISTING UTILITIES ADDITIONAL COVER MAY BE REQUIRED AS SPECIFIED IN THE CONSTRUCTION SPECIFICATIONS AND PL-TYP 22 - 24.
2. REFER TO ALIGNMENT SHEETS FOR PROJECT SPECIFIC WORKSPACE LOCATIONS AND DIMENSIONS.
3. REQUESTS FOR ADDITIONAL WORKSPACE NOT SHOWN ON ALIGNMENT SHEETS SHALL BE SUBMITTED TO COMPANY THROUGH AN RFI.

REV	REVISION DESCRIPTION	DATE	BY	CHK	APP
A	ISSUED FOR PERMITTING	--/--/--	PGH	SMH	BWY

This document is copyrighted and is an instrument of service by Samuel Engineering (SE). It was prepared solely for the Owner's/Client's use on this project only. Use, copy or disclosure of any information shown, in whole or in part, without SE's consent, is strictly prohibited, is a copyright breach and may be prosecuted. Any unauthorized reuse shall be at the sole risk of the user.

SAMUEL ENGINEERING
WE PROVIDE SOLUTIONS
8450 E. Crescent Parkway, Suite 200
Greenwood Village, CO 80111
Phone: 303.714.4840
Fax: 303.714.4800
Web: samuelengineering.com

PIPELINE TYPICAL
ADDITIONAL WORKSPACE FOR HDD
WATERBODY CROSSING

DRAWING NUMBER
PL-TYP-009
REV A

CAD File: S:\Projects\25020_Equinox_Pipeline\CAD\Pipeline\Drawings\Typicals\EQUINOX-TYPICALS.dwg
Plot Date: Tuesday, June 9, 2026 6:52:23 AM Plotted By: Jeff Schilz
Monochrome.ctb

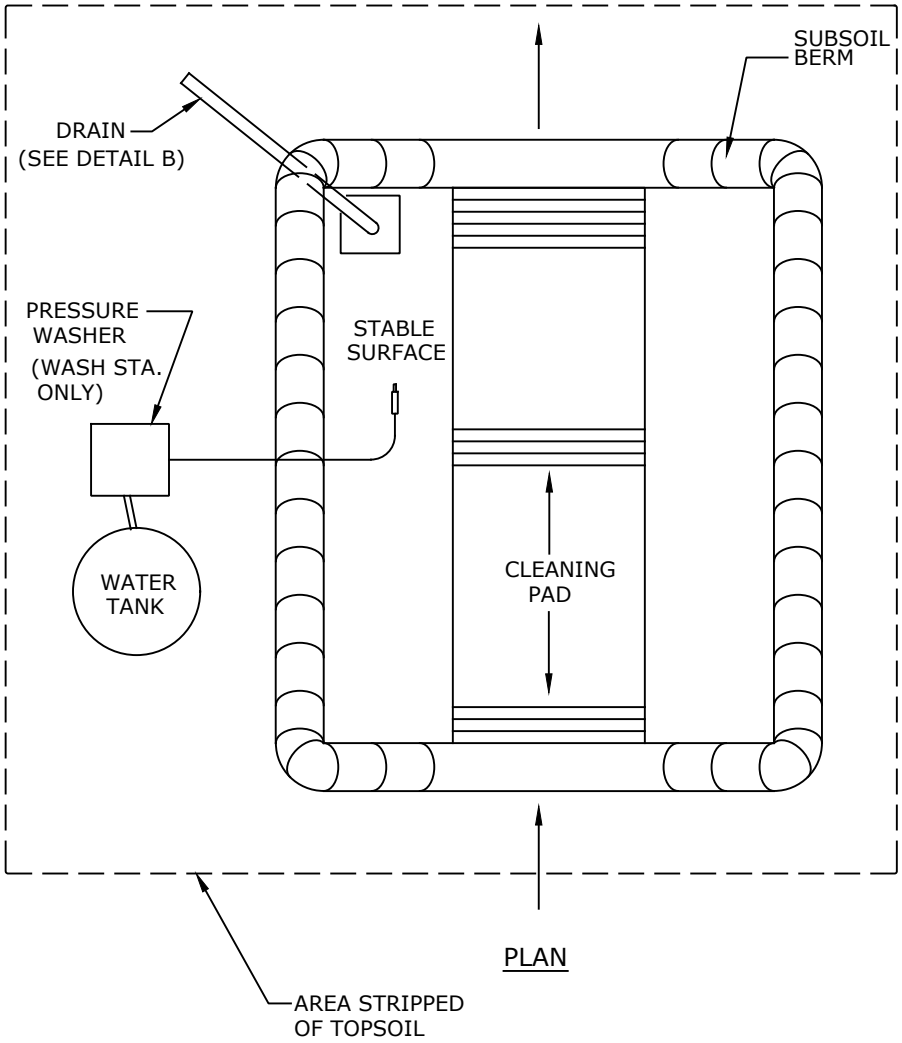

PLAN

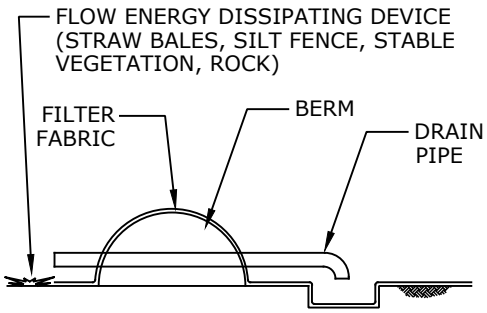

DETAIL "B"
(NOT TO SCALE)

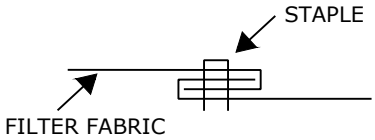

DETAIL "A"
(NOT TO SCALE)

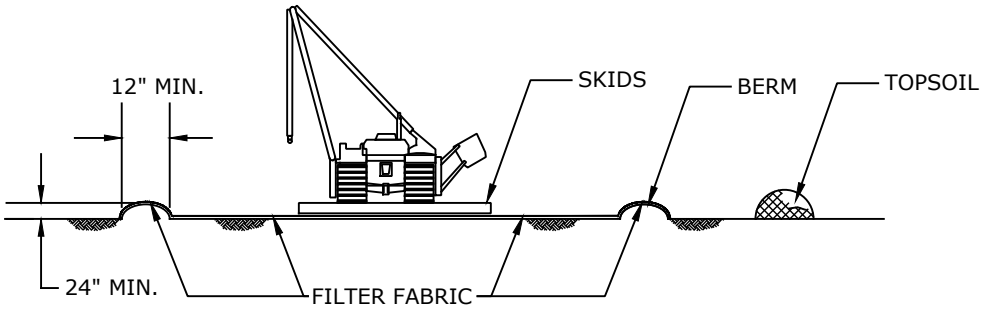

ELEVATION

REV	REVISION DESCRIPTION	DATE	BY	CHK	APP
A	ISSUED FOR PERMITTING	--/--/--	PGH	SMH	BWY

This document is copyrighted and is an instrument of service by Samuel Engineering (SE). It was prepared solely for the Owner's/Client's use on this project only. Use, copy or disclosure of any information shown, in whole or in part, without SE's consent, is strictly prohibited, is a copyright breach and may be prosecuted. Any unauthorized reuse shall be at the sole risk of the user.

SAMUEL ENGINEERING
WE PROVIDE SOLUTIONS
8450 E. Crescent Parkway, Suite 200
Greenwood Village, CO 80111
Phone: 303.714.4840
Fax: 303.714.4800
Web: samuelengineering.com

PIPELINE TYPICAL
EQUIPMENT CLEANING STATION
(SHT. 1 OF 2)

DRAWING NUMBER
PL-TYP-048
REV A

CAD File: S:\Projects\25020_Equinox_Pipeline\CAD\Pipeline\Drawings\Typicals\EQUINOX-TYPICALS.dwg
Plot Date: Tuesday, June 9, 2026 6:52:28 AM Plotted By: Jeff Schilz
Monochrome.ctb

EQUIPMENT CLEANING STATION NOTES:

1. STATIONS MUST BE INSTALLED AT ALL LOCATIONS REQUIRED BY COMPANY AND MUST BE A MINIMUM OF 1,320 FEET (0.25 MILES) FROM PERENNIAL WATERBODIES. EQUIPMENT MOVED FROM A WEED INFESTED AREA MUST BE WASHED OR OTHERWISE CLEANED PRIOR TO MOBILIZATION.

2. DURING NON-FROZEN SOIL CONDITIONS, CONSTRUCT CLEANING STATIONS FOR HIGH PRESSURE WATER CLEANING AT APPROVED LOCATIONS BY STRIPPING TOPSOIL AND CONSTRUCTING CONTAINMENT BERMS OUT OF SUBSOIL.

3. CONTAINMENT BERMS WILL NOT BE REQUIRED WHEN CLEANING WILL BE DONE USING COMPRESSED AIR AND TRACK SHOVELS INSTEAD OF HIGH PRESSURE WATER.

4. CLEANING SHALL BE CARRIED OUT UNDER THE SUPERVISION AND TO THE SATISFACTION OF THE ENVIRONMENTAL INSPECTOR.

5. STATION TO BE EQUIPPED WITH TIMBER MATS, SKID PADS, OR RACKS TO ELEVATE EQUIPMENT TRACKS/TIRES SO THAT SOIL AND WEEDS WILL BE CONTAINED IN THE STATION BASIN.

6. FILTER FABRIC TO BE INSTALLED AS A CONTINUOUS PIECE AND PLACED OVER THE TOP AND TO THE OUTSIDE EDGE OF THE BERMS AND FIRMLY FASTENED IN PLACE. THE EDGES OF PARALLEL PIECES SHALL BE OVERLAPPED A MINIMUM OF 12 INCHES (SHINGLE STYLE), AND FOLDED OVER (SEE DETAIL A). STAPLE THROUGH THE OVERLAPPED AREA EVERY 12 INCHES.

7. FILTER FABRIC SHALL BE NON-WOVEN POLYPROPYLENE, WITH AN APPARENT OPENING SIZE OF 70 TO 100 (U.S. SIEVE), 200-POUND GRAB STRENGTH, AND 8 OUNCES PER YARD UNIT WEIGHT, OR BETTER. IN AREAS THAT ARE NOT ROCKY, CONTRACTOR MAY CHOOSE TO USE NON-WOVEN POLYPROPYLENE, 160-POUND GRAB STRENGTH, AND 6 OUNCES PER YARD UNIT WEIGHT IF APPROVED BY COMPANY INSPECTOR.

8. WATER USED FOR CLEANING SHALL NOT BE ALLOWED TO FLOW INTO ANY WATERBODY, WETLAND OR IRRIGATION CANAL/DITCH.

9. SIZE OF STATION SHALL BE ADEQUATE TO ACCOMMODATE THE MAXIMUM SIZE OF EQUIPMENT EXPECTED.

10. SKIDS ARE TO BE CLEANED BETWEEN WASHING INDEPENDENT PIECES OF EQUIPMENT.

11. FILTER FABRIC WILL BE REMOVED TO AN ACCEPTABLE LANDFILL WHEN THE WASH STATION IS DISMANTLED.

12. THE DEPRESSION WILL BE BACKFILLED WITH BERMED MATERIAL. ANY SOILS CONTAMINATED BY PETROLEUM BASED OR OTHER UNDESIRABLE MATERIALS FROM CLEAN OFF STATIONS SHALL BE REMOVED IN ACCORDANCE WITH APPLICABLE REGULATORY REQUIREMENTS.

13. TOPSOIL WILL BE RETURNED AND THE AREA RECLAIMED.

14. CLEANING SITES WILL BE MONITORED DURING THE POST CONSTRUCTION MONITORING PROGRAM AND WEEDS CONTROLLED AS REQUIRED.

15. ALTERNATIVE CLEANING STATION CONFIGURATIONS SHALL BE APPROVED BY THE COMPANY ENVIRONMENTAL INSPECTOR AND THRU AN APPROVED RFI.

REV	REVISION DESCRIPTION	DATE	BY	CHK	APP
A	ISSUED FOR PERMITTING	--/--/--	PGH	SMH	BWY

This document is copyrighted and is an instrument of service by Samuel Engineering (SE). It was prepared solely for the Owner's/Client's use on this project only. Use, copy or disclosure of any information shown, in whole or in part, without SE's consent, is strictly prohibited, is a copyright breach and may be prosecuted. Any unauthorized reuse shall be at the sole risk of the user.

SAMUEL ENGINEERING
WE PROVIDE SOLUTIONS
8450 E. Crescent Parkway, Suite 200
Greenwood Village, CO 80111
Phone: 303.714.4840
Fax: 303.714.4800
Web: samuelengineering.com

PIPELINE TYPICAL
EQUIPMENT CLEANING STATION
(SHT. 2 OF 2)

DRAWING NUMBER
PL-TYP-049
REV A

CAD File: S:\Projects\25020_Equinox_Pipeline\CAD\Pipeline\Drawings\Typicals\EQUINOX-TYPICALS.dwg
Plot Date: Tuesday, June 9, 2026 6:52:33 AM Plotted By: Jeff Schilz
Monochrome.ctb

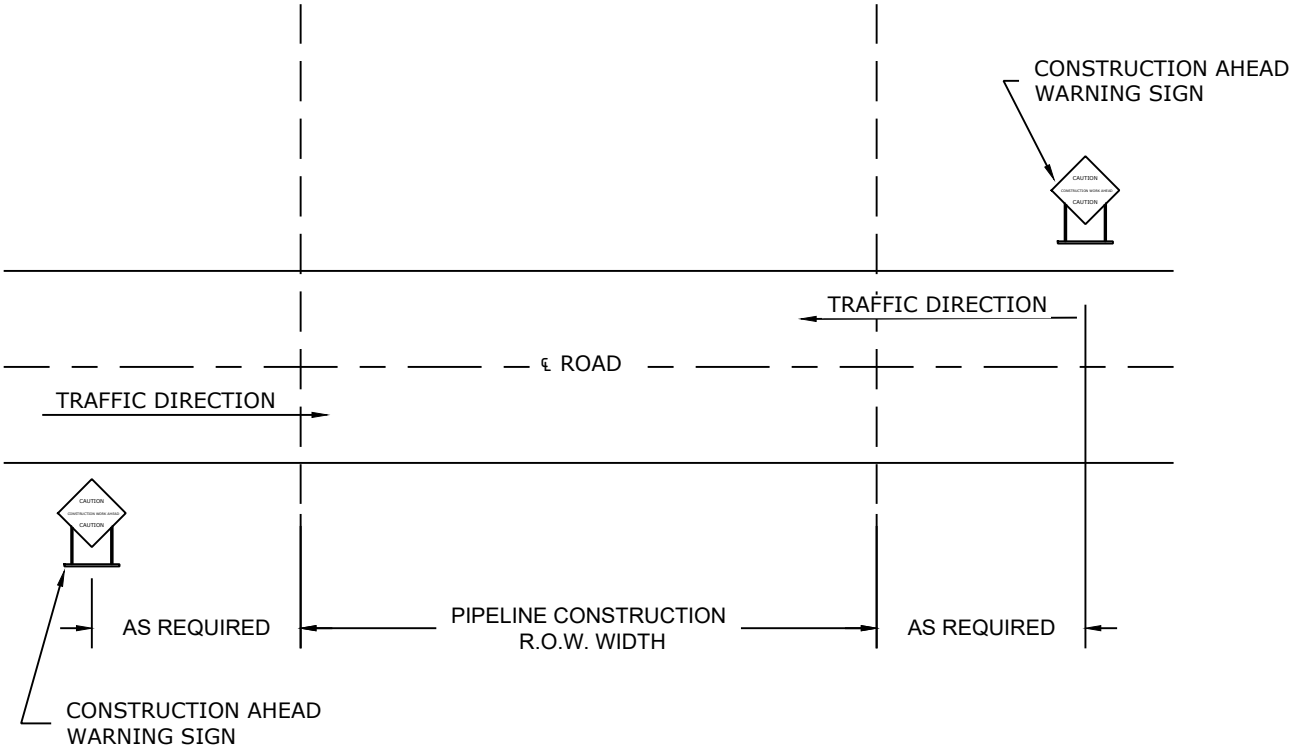

NOTES:

1. CONTRACTOR IS TO CONTACT APPROPRIATE CITY, COUNTY, STATE OR FEDERAL AGENCIES TO IDENTIFY TRAFFIC CONTROL REQUIREMENTS.

2. CONTRACTOR SHALL PROVIDE DETAILED TRAFFIC CONTROL PLAN TO COMPANY THAT ADHERES TO FEDERAL, STATE AND LOCAL REQUIREMENTS FOR APPROVAL. COMPANY REVIEW AND APPROVAL DOES NOT RELIEVE CONTRACTOR OF ANY RESPONSIBILITIES RELATED TO THE QUALITY, CORRECTNESS AND IMPLEMENTATION OF THE TRAFFIC CONTROL PLAN.

3. CONTRACTOR IS TO SUPPLY ALL REQUIRED MATERIAL AND LABOR TO PROVIDE TRAFFIC CONTROL.

4. DRAWING INDICATES MINIMUM REQUIREMENTS. ADDITIONAL TRAFFIC CONTROL METHODS WILL BE REQUIRED IN ACCORDANCE WITH THE APPROVED TRAFFIC CONTROL PLAN.

REV	REVISION DESCRIPTION	DATE	BY	CHK	APP
A	ISSUED FOR PERMITTING	--/--/--	PGH	SMH	BWY

This document is copyrighted and is an instrument of service by Samuel Engineering (SE). It was prepared solely for the Owner's/Client's use on this project only. Use, copy or disclosure of any information shown, in whole or in part, without SE's consent, is strictly prohibited, is a copyright breach and may be prosecuted. Any unauthorized reuse shall be at the sole risk of the user.

SAMUEL ENGINEERING
WE PROVIDE SOLUTIONS
8450 E. Crescent Parkway, Suite 200
Greenwood Village, CO 80111
Phone: 303.714.4840
Fax: 303.714.4800
Web: samuelengineering.com

PIPELINE TYPICAL
TRAFFIC CONTROL PLAN

DRAWING NUMBER
PL-TYP-050
REV A

CAD File: S:\Projects\25020_Equinox_Pipeline\CAD\Pipeline\Drawings\Typicals\EQUINOX-TYPICALS.dwg
Plot Date: Tuesday, June 9, 2026 6:52:38 AM Plotted By: Jeff Schilz
Monochrome.ctb

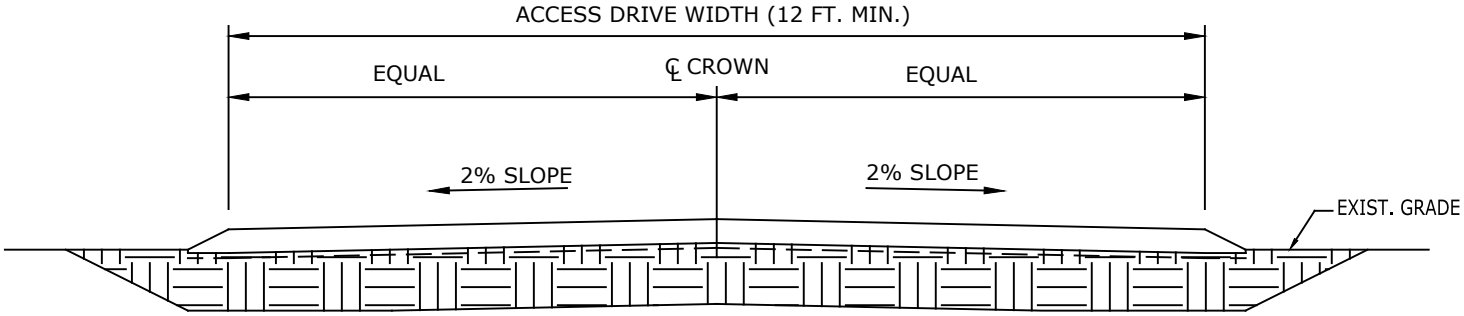

ACCESS DRIVE CROSS-SECTION
SCALE: NTS

NOTES:

1. THREE TYPES OF AGGREGATES MAY BE USED:
   WASHED GRAVEL, ROAD BASE OR RECLAIMED ASPHALT

2. LANDOWNER STIPULATIONS AND PERMITS APPLY AND MAY HAVE ADDITIONAL REQUIREMENTS.

REV	REVISION DESCRIPTION	DATE	BY	CHK	APP
A	ISSUED FOR PERMITTING	--/--/--	PGH	SMH	BWY

This document is copyrighted and is an instrument of service by Samuel Engineering (SE). It was prepared solely for the Owner's/Client's use on this project only. Use, copy or disclosure of any information shown, in whole or in part, without SE's consent, is strictly prohibited, is a copyright breach and may be prosecuted. Any unauthorized reuse shall be at the sole risk of the user.

SAMUEL ENGINEERING
WE PROVIDE SOLUTIONS
8450 E. Crescent Parkway, Suite 200
Greenwood Village, CO 80111
Phone: 303.714.4840
Fax: 303.714.4800
Web: samuelengineering.com

PIPELINE TYPICAL
ACCESS DRIVE CROSS SECTION

DRAWING NUMBER
PL-TYP-053
REV A

CAD File: S:\Projects\25020_Equinox_Pipeline\CAD\Pipeline\Drawings\Typicals\EQUINOX-TYPICALS.dwg
Plot Date: Tuesday, June 9, 2026 6:52:43 AM Plotted By: Jeff Schilz
Monochrome.ctb

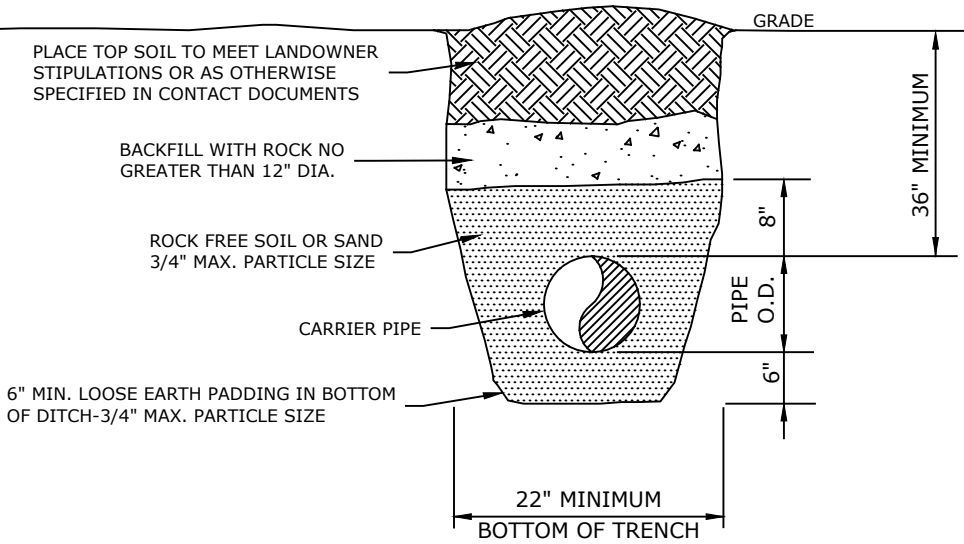

NOTES:

1. UNLESS GREATER DEPTH REQUIRED BY PERMIT OR ROW AGREEMENT OR AS SPECIFIED ON ALIGNEMENT SHEETS.
2. UNLESS WITHIN PUBLIC ROAD DRAINAGE DITCHES, THEN DEPTH OF COVER INCREASES TO 120" AT LOW POINT OF DRAINAGE DITCH.SECURE BRIDGE MAT TO SUPPORTS ON EACH SIDE TO ADEQUATELY PREVENT ANY LATERAL MOVEMENT WHILE IN USE (TYP EACH END).
3. SEE LANDOWNER STIPULATIONS. WHERE COMPACTION IS REQUIRED, TRENCH SHALL BE BACKFILLED IN 12 INCH LIFTS AND COMPACTED TO 80 - 90% MAXIMUM DRY DENSITY PER ASTM D698.

REV	REVISION DESCRIPTION	DATE	BY	CHK	APP
A	ISSUED FOR PERMITTING	--/--/--	PGH	SMH	BWY

This document is copyrighted and is an instrument of service by Samuel Engineering (SE). It was prepared solely for the Owner's/Client's use on this project only. Use, copy or disclosure of any information shown, in whole or in part, without SE's consent, is strictly prohibited, is a copyright breach and may be prosecuted. Any unauthorized reuse shall be at the sole risk of the user.

SAMUEL ENGINEERING
WE PROVIDE SOLUTIONS
8450 E. Crescent Parkway, Suite 200
Greenwood Village, CO 80111
Phone: 303.714.4840
Fax: 303.714.4800
Web: samuelengineering.com

PIPELINE TYPICAL
LANDFILL OR OPEN CUT HEAVY WALL PIPE
TRENCHING, BACKFILL & COMPACTION

DRAWING NUMBER
PL-TYP-055
REV A

CAD File: S:\Projects\25020_Equinox_Pipeline\CAD\Pipeline\Drawings\Typicals\EQUINOX-TYPICALS.dwg
Plot Date: Monday, June 15, 2026 1:38:44 PM Plotted By: Jeff Schilz
Monochrome.ctb

AERIAL MARKER

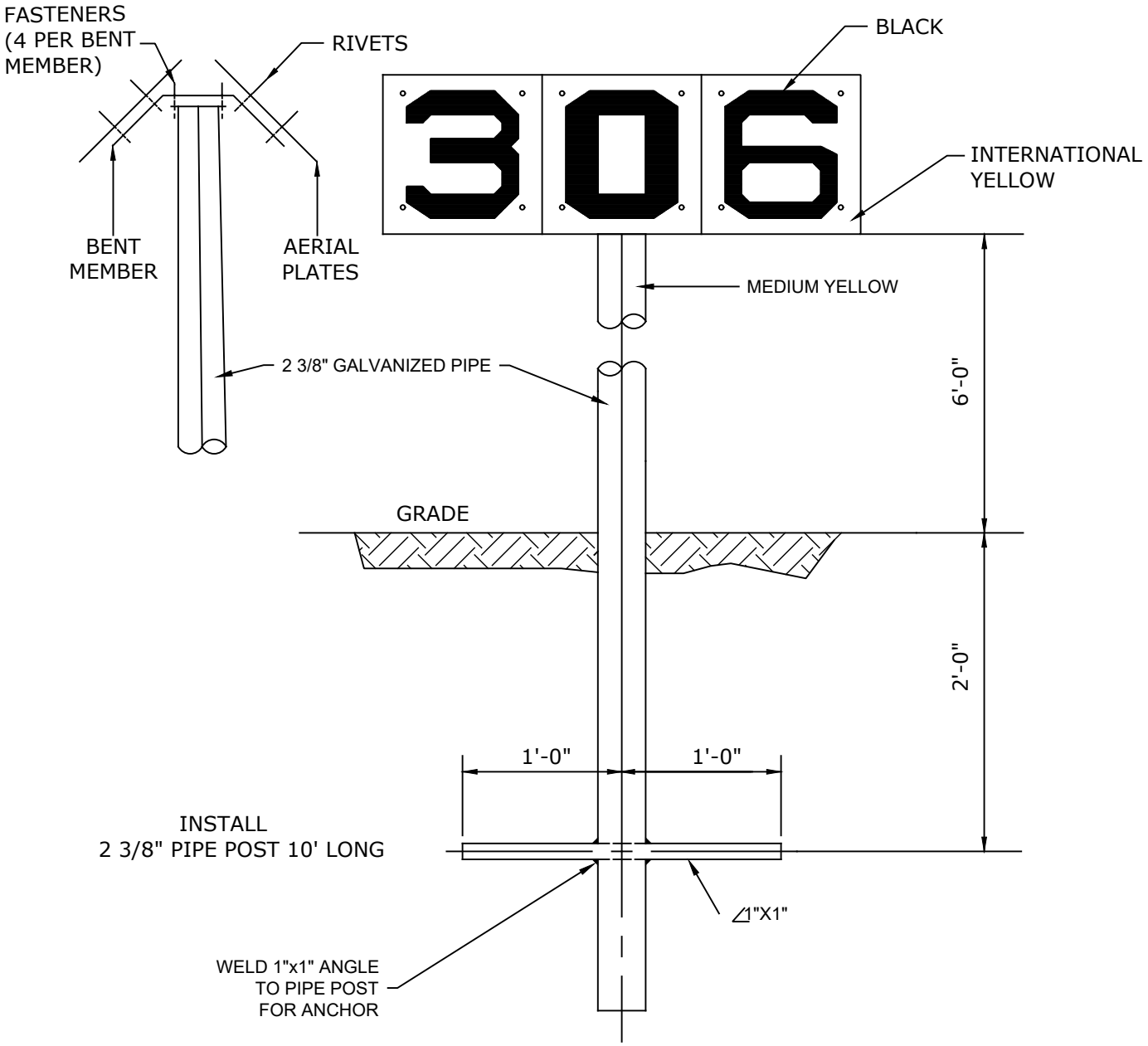

NOTES:

1. SIGNAGE AND MOUNTING FRAME FURNISHED BY OWNER.
2. CONTRACTOR TO ASSEMBLE SIGN AND MOUNT ON POST.
3. TO BE PLACED AT LOCATIONS IDENTIFIED BY OWNER.
4. IF ANY INTERFERENCE OR CONFLICT ARISES DUE TO THE LOCATION, LANDOWNER CONCERNS, PRACTICALITY ETC; COMPANY WILL ADDRESS AT THE TIME IT IS DISCOVERED.
5. LINE MARKERS MAY NEED TO BE OFFSET 90 DEGREES FROM THE PIPELINE IF AN INTERFERENCE EXISTS SUCH AS BEING IN THE MIDDLE OF A PARALLEL RTD OR UTILITY ACCESS ROAD ETC.

REV	REVISION DESCRIPTION	DATE	BY	CHK	APP
A	ISSUED FOR PERMITTING	--/--/--	PGH	SMH	BWY

This document is copyrighted and is an instrument of service by Samuel Engineering (SE). It was prepared solely for the Owner's/Client's use on this project only. Use, copy or disclosure of any information shown, in whole or in part, without SE's consent, is strictly prohibited, is a copyright breach and may be prosecuted. Any unauthorized reuse shall be at the sole risk of the user.

SAMUEL ENGINEERING
WE PROVIDE SOLUTIONS
8450 E. Crescent Parkway, Suite 200
Greenwood Village, CO 80111
Phone: 303.714.4840
Fax: 303.714.4800
Web: samuelengineering.com

PIPELINE TYPICAL
TYPE 1 AERIAL MARKER

DRAWING NUMBER
PL-TYP-063
REV A

CAD File: S:\Projects\25020_Equinox_Pipeline\CAD\Pipeline\Drawings\Typicals\EQUINOX-TYPICALS.dwg
Plot Date: Tuesday, June 9, 2026 6:52:53 AM Plotted By: Jeff Schilz
Monochrome.ctb

"CAUTION" PIPELINE SIGN

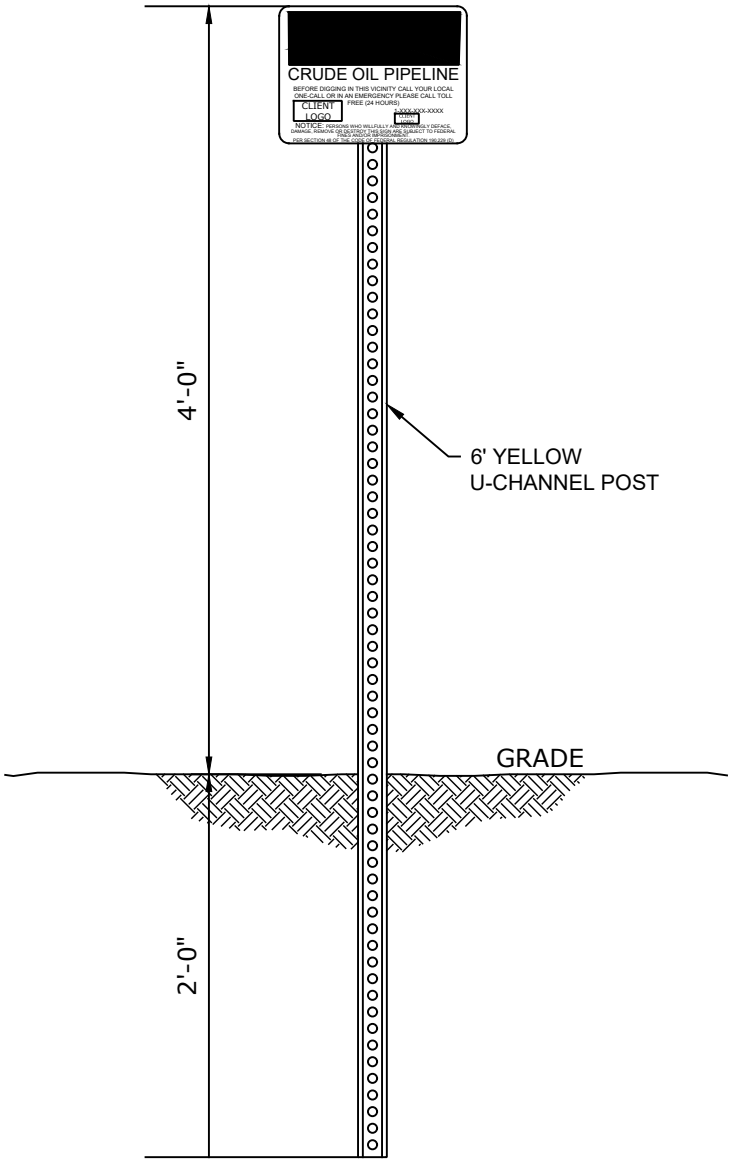

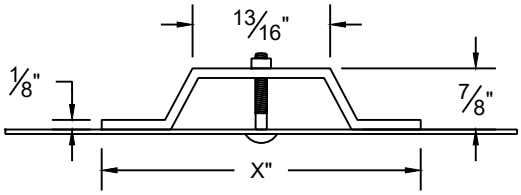

TOP VIEW
1.12"/FT
U-CHANNEL POST

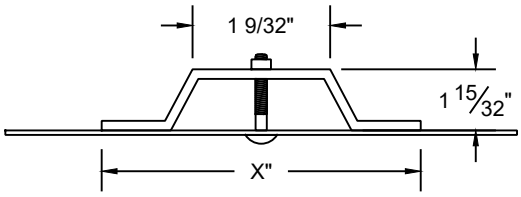

TOP VIEW
12"/FT
U-CHANNEL POST

NOTES:

1. SIGNAGE, POSTS, AND FASTENERS SUPPLIED BY COMPANY.
2. CONTRACTOR SHALL ASSEMBLE AND INSTALL AT BOTH SIDES OF ALL ROADWAYS (PAVED AND UNPAVED), BOTH SIDES OF RAILROADS AND BOTH SIDES OF ALL WATER BODY CROSSINGS, OR AS DESIGNATED BY COMPANY.
3. MARKER SHALL BE PLACED DIRECTLY OVER THE PIPELINE FACING IN THE DIRECTION OF FLOW UNLESS OTHERWISE CALLED OUT ELSEWHERE OR DESIGNATED BY THE COMPANY REPRESENTATIVE.
4. MARKER SHALL BE FACED TO READ FROM ROAD WITH FACE OF MARKER PARALLEL WITH ROAD R-O-W LINES.
5. IF ANY INTERFERENCE OR CONFLICT ARISES DUE TO THE LOCATION, LANDOWNER CONCERNS, PRACTICALITY ETC; COMPANY WILL ADDRESS AT THE TIME IT IS DISCOVERED.
6. LINE MARKERS MAY NEED TO BE OFFSET 90 DEGREES FROM THE PIPELINE IF AN INTERFERENCE EXISTS SUCH AS BEING IN THE MIDDLE OF A PARALLEL RTD OR UTILITY ACCESS ROAD ETC.

REV	REVISION DESCRIPTION	DATE	BY	CHK	APP
A	ISSUED FOR PERMITTING	--/--/--	PGH	SMH	BWY

This document is copyrighted and is an instrument of service by Samuel Engineering (SE). It was prepared solely for the Owner's/Client's use on this project only. Use, copy or disclosure of any information shown, in whole or in part, without SE's consent, is strictly prohibited, is a copyright breach and may be prosecuted. Any unauthorized reuse shall be at the sole risk of the user.

SAMUEL ENGINEERING
WE PROVIDE SOLUTIONS
8450 E. Crescent Parkway, Suite 200
Greenwood Village, CO 80111
Phone: 303.714.4840
Fax: 303.714.4800
Web: samuelengineering.com

PIPELINE TYPICAL
TYPE 2 PIPELINE MARKER

DRAWING NUMBER
PL-TYP-064
REV A

CAD File: S:\Projects\25020_Equinox_Pipeline\CAD\Pipeline\Drawings\Typicals\EQUINOX-TYPICALS.dwg
Plot Date: Tuesday, June 9, 2026 6:52:58 AM Plotted By: Jeff Schilz
Monochrome.ctb

PIPELINE WARNING MARKER

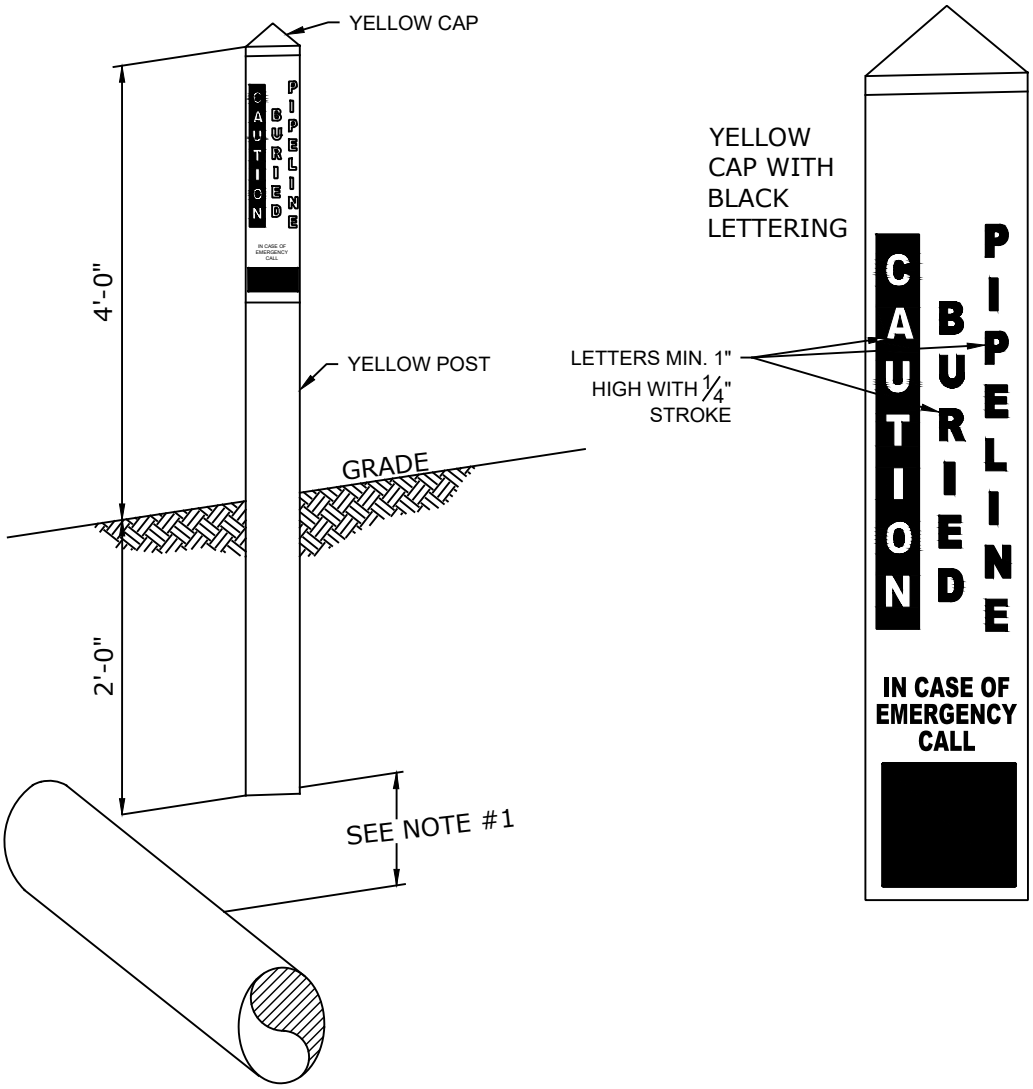

NOTES:

1. MARKER POST SHALL BE PLACED DIRECTLY OVER THE PIPELINE WHEN THERE IS AT LEAST 1'-0" OF CLEARANCE BETWEEN THE TOP OF THE PIPE AND THE BOTTOM OF THE MARKER.
2. MARKERS SHALL BE PLACED IN THE FOLLOWING LOCATIONS:
   - ONE SIDE OF EVERY PATHWAY OR SIDEWALK CROSSING (NOTE: IF A PATHWAY OR SIDEWALK IS ADJACENT TO AND PARALLEL TO A ROADWAY THEN ONE TYPE 2 STEEL POST W/ALUMINUM SIGN MARKER WILL SUFFICE FOR BOTH THE ROAD AND THE SIDEWALK/PATHWAY. AN ADDITIONAL TYPE 2 MARKER IS STILL REQUIRED ON THE OTHER SIDE OF THE ROADWAY)
   - EVERY PROPERTY LINE CROSSING WITHOUT A FENCE (FENCE LINE REQUIREMENTS APPLY IF A FENCE LINE IS PRESENT)
   - BOTH SIDES OF ALL RAILROAD CROSSINGS
   - EVERY PI AND 100' U/S & D/S OF THE PI (NOTE: IF ANOTHER MARKER IS REQUIRED WITHIN 100' BUT BEYOND THE TANGENTS OF THE PI SUCH AS A MARKER ON A FENCE LINE THEN THE FENCE LINE MARKER WILL SUFFICE FOR THE 100' MARKER ON THE SIDE OF THE PI THAT FENCE LINE MARKER IS ON)
   - EVERY 500' OR LINE OF SIGHT FROM ONE MARKER TO THE NEXT MARKER (WHICHEVER IS THE SHORTEST DISTANCE) IN OPEN PIPE ROW WHERE OTHER REQUIRED MARKERS DO NOT EXIST.
3. MARKER POSTS SUPPLIED BY COMPANY.
5. IF ANY INTERFERENCE OR CONFLICT ARISES DUE TO THE LOCATION, LANDOWNER CONCERNS, PRACTICALITY ETC; COMPANY WILL ADDRESS AT THE TIME IT IS DISCOVERED.
6. LINE MARKERS MAY NEED TO BE OFFSET 90 DEGREES FROM THE PIPELINE IF AN INTERFERENCE EXISTS SUCH AS BEING IN THE MIDDLE OF A PARALLEL RTD OR UTILITY ACCESS ROAD ETC.

REV	REVISION DESCRIPTION	DATE	BY	CHK	APP
A	ISSUED FOR PERMITTING	--/--/--	PGH	SMH	BWY

This document is copyrighted and is an instrument of service by Samuel Engineering (SE). It was prepared solely for the Owner's/Client's use on this project only. Use, copy or disclosure of any information shown, in whole or in part, without SE's consent, is strictly prohibited, is a copyright breach and may be prosecuted. Any unauthorized reuse shall be at the sole risk of the user.

SAMUEL ENGINEERING
WE PROVIDE SOLUTIONS
8450 E. Crescent Parkway, Suite 200
Greenwood Village, CO 80111
Phone: 303.714.4840
Fax: 303.714.4800
Web: samuelengineering.com

PIPELINE TYPICAL
TYPE 3 PIPELINE MARKER

DRAWING NUMBER
PL-TYP-065
REV A

CAD File: S:\Projects\25020_Equinox_Pipeline\CAD\Pipeline\Drawings\Typicals\EQUINOX-TYPICALS.dwg
Plot Date: Tuesday, June 9, 2026 6:53:03 AM Plotted By: Jeff Schilz
Monochrome.ctb

SLOPE(%)	SPACING (FEET)
5-15	300
>15-30	200
>30	100

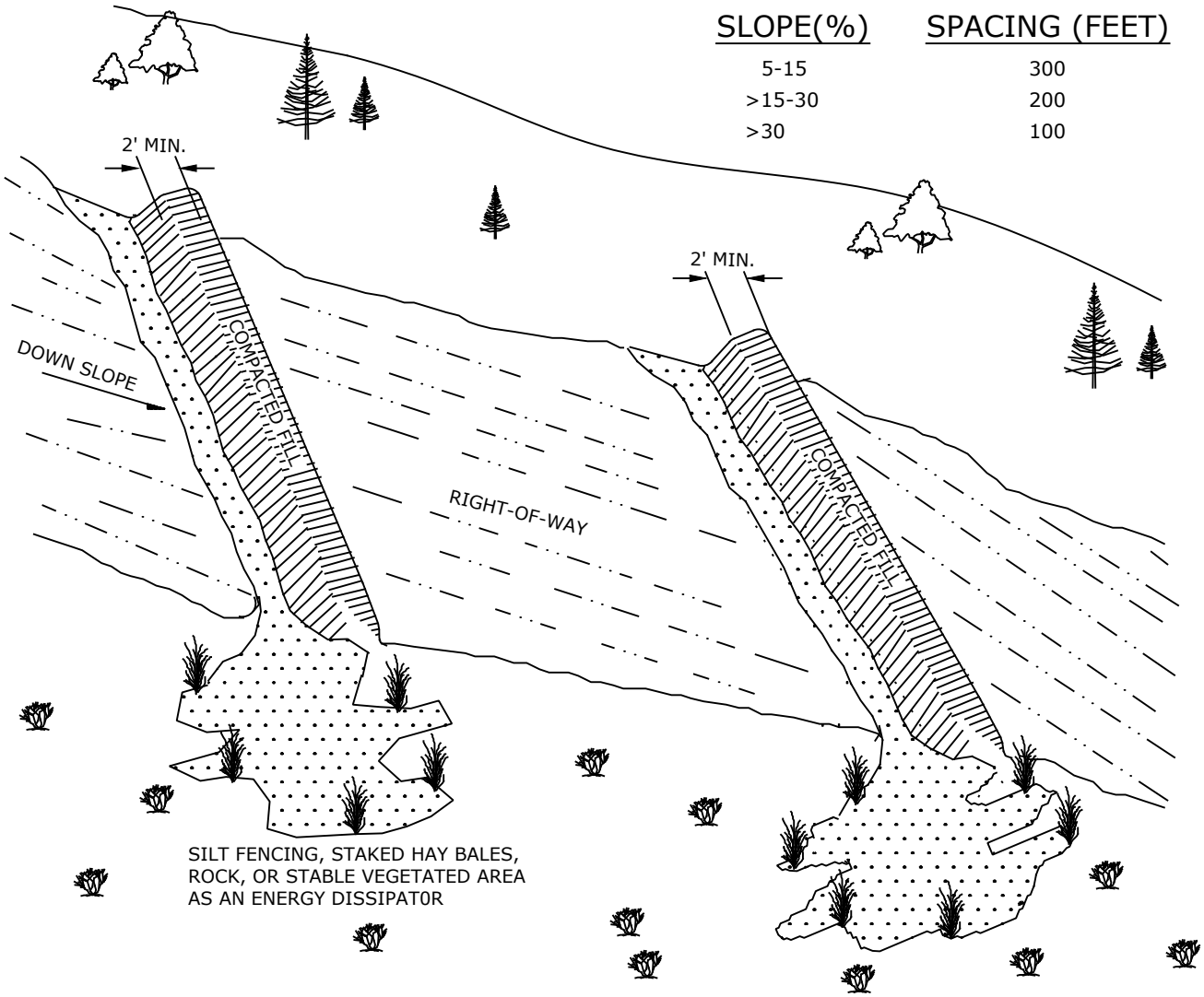

SLOPE BREAKER NOTES:

1. SLOPE BREAKERS SHALL BE CONSTRUCTED OF COMPACTED NATIVE SOIL AND INSTALLED AT LOCATIONS AS SHOWN ON THE CONSTRUCTION DRAWINGS OR AS DIRECTED BY THE COMPANY REPRESENTATIVE.
2. SLOPE BREAKER SHALL BE ORIENTED AS SHOWN OR OTHER PATTERN AS DIRECTED BY THE COMPANY REPRESENTATIVE TO DIRECT THE WATER OFF THE R.O.W.
3. SLOPE BREAKERS SHALL BE CONSTRUCTED AT A 2-8% GRADIENT ACROSS THE SLOPE.
4. THE SLOPE BREAKERS SHALL BE 18" DEEP (AS MEASURED FROM THE TROUGH TO THE TOP OF THE SLOPE BREAKER). THE TROUGH WILL BE A MINIMUM OF 5' WIDE ACROSS THE WIDTH OF THE RIGHT-OF-WAY.
5. THE OUTLET OF THE SLOPE BREAKER MUST FREELY DISCHARGE ALL RUNOFF OFF THE DISTURBED R.O.W. INTO A STABLE, WELL VEGETATED AREA OR INTO AN ENERGY DISSIPATOR.
6. WHERE SLOPE BREAKERS EXTEND BEYOND THE EDGE OF THE CONSTRUCTION R.O.W. TO DIRECT RUNOFF INTO STABLE, WELL VEGETATED AREAS, THESE LOCATIONS MUST BE APPROVED THROUGH AN RFI.
7. INSTALL A TRENCH BREAKER (SEE BMP-TYP-004 OR BMP-TYP-005) AT EVERY SLOPE BREAKER.
8. SLOPE BREAKERS SHALL BE AS CLOSE TO 90° TO SLOPE AS POSSIBLE.

REV	REVISION DESCRIPTION	DATE	BY	CHK	APP
A	ISSUED FOR PERMITTING	--/--/--	PGH	SMH	BWY

This document is copyrighted and is an instrument of service by Samuel Engineering (SE). It was prepared solely for the Owner's/Client's use on this project only. Use, copy or disclosure of any information shown, in whole or in part, without SE's consent, is strictly prohibited, is a copyright breach and may be prosecuted. Any unauthorized reuse shall be at the sole risk of the user.

SAMUEL ENGINEERING
WE PROVIDE SOLUTIONS
8450 E. Crescent Parkway, Suite 200
Greenwood Village, CO 80111
Phone: 303.714.4840
Fax: 303.714.4800
Web: samuelengineering.com

PIPELINE TYPICAL
SLOPE BREAKER WITH LONGTITUDINAL & CROSS SLOPES (SHT. 1 OF 3)

DRAWING NUMBER
BMP-TYP-001
REV A

CAD File: S:\Projects\25020_Equinox_Pipeline\CAD\Pipeline\Drawings\Typicals\EQUINOX-TYPICALS.dwg
Plot Date: Tuesday, June 9, 2026 6:53:10 AM Plotted By: Jeff Schilz
Monochrome.ctb

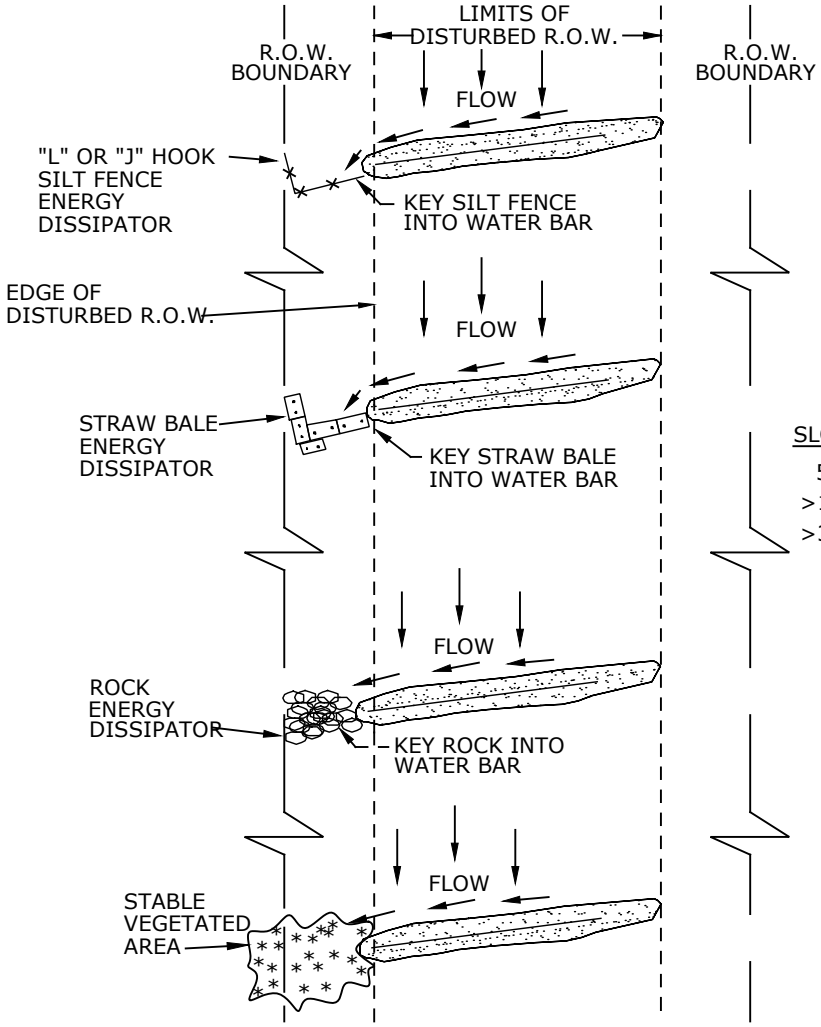

SLOPE(%)	SPACING (FEET)
5-15	300
>15-30	200
>30	100

PLAN VIEW

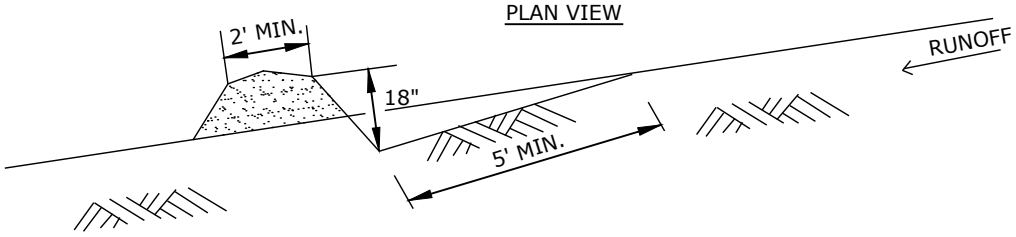

SLOPE BREAKER CROSS SECTION DETAIL

FLOW ENERGY DISSIPATOR NOTES:

1. THE OUTLET SHALL CONTAIN AN ENERGY DISSIPATOR IF THE COMPANY REPRESENTATIVE DETERMINES EXISTING VEGETATION IS NOT SUFFICIENTLY STABLE TO PREVENT EROSION. THE ENERGY DISSIPATOR SHALL BE CONSTRUCTED AS FOLLOWS:
   - OUTFALL END OF DISSIPATOR SHOULD BE LOWER THAN SLOPE BREAKER END.
   - SILT FENCE, STRAW BALE OR ROCK DISSIPATORS SHOULD BE KEYED INTO THE END OF THE SLOPE BREAKER A MINIMUM OF 12" BELOW GRADE.
   - PROVIDE ENOUGH AREA INSIDE "L" TO CAPTURE AND HOLD SEDIMENT.

REV	REVISION DESCRIPTION	DATE	BY	CHK	APP
A	ISSUED FOR PERMITTING	--/--/--	PGH	SMH	BWY

This document is copyrighted and is an instrument of service by Samuel Engineering (SE). It was prepared solely for the Owner's/Client's use on this project only. Use, copy or disclosure of any information shown, in whole or in part, without SE's consent, is strictly prohibited, is a copyright breach and may be prosecuted. Any unauthorized reuse shall be at the sole risk of the user.

SAMUEL ENGINEERING
WE PROVIDE SOLUTIONS
8450 E. Crescent Parkway, Suite 200
Greenwood Village, CO 80111
Phone: 303.714.4840
Fax: 303.714.4800
Web: samuelengineering.com

PIPELINE TYPICAL
SLOPE BREAKER WITH LONGTITUDINAL & CROSS SLOPES (SHT. 2 OF 3)

DRAWING NUMBER
BMP-TYP-002
REV A

CAD File: S:\Projects\25020_Equinox_Pipeline\CAD\Pipeline\Drawings\Typicals\EQUINOX-TYPICALS.dwg
Plot Date: Tuesday, June 9, 2026 6:53:13 AM Plotted By: Jeff Schilz
Monochrome.ctb

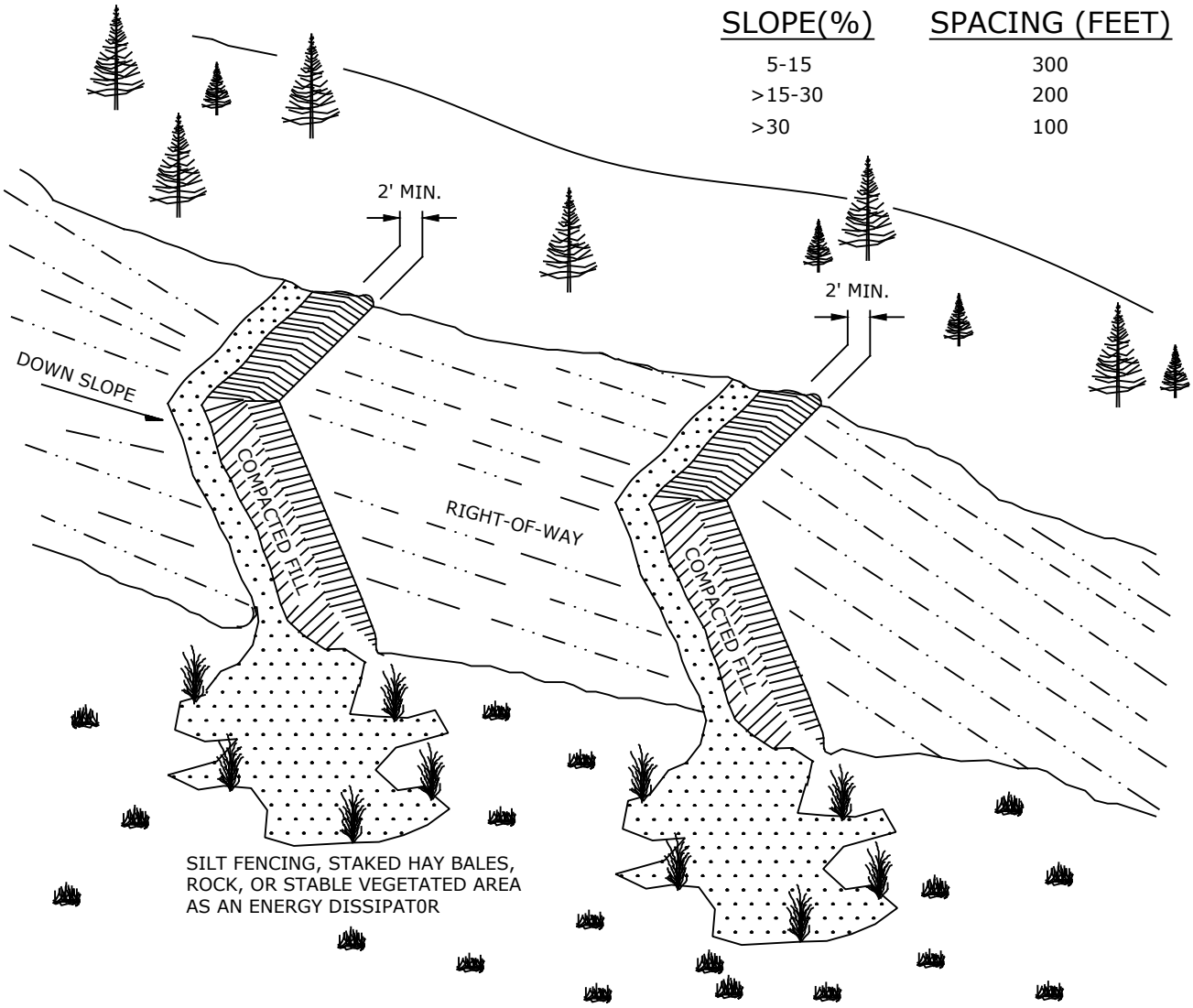

SLOPE(%)	SPACING (FEET)
5-15	300
>15-30	200
>30	100

SLOPE BREAKER NOTES:

1. SEE (BMP-TYP-001 & BMP-TYP-020) FOR SLOPE BREAKER DETAIL AND NOTES.
2. INSTALL A TRENCH BREAKER (SEE BMP-TYP-004) AT EVERY SLOPE BREAKER.
3. IF SLOPE BREAKERS EXIST AND THE SPACING BETWEEN SLOPE BREAKERS IS LESS THAN THE SPACING SHOWN ON (BMP-TYP-001 & BMP-TYP-002), THEN MATCH THE EXISTING SPACING.

REV	REVISION DESCRIPTION	DATE	BY	CHK	APP
A	ISSUED FOR PERMITTING	--/--/--	PGH	SMH	BWY

This document is copyrighted and is an instrument of service by Samuel Engineering (SE). It was prepared solely for the Owner's/Client's use on this project only. Use, copy or disclosure of any information shown, in whole or in part, without SE's consent, is strictly prohibited, is a copyright breach and may be prosecuted. Any unauthorized reuse shall be at the sole risk of the user.

SAMUEL ENGINEERING
WE PROVIDE SOLUTIONS
8450 E. Crescent Parkway, Suite 200
Greenwood Village, CO 80111
Phone: 303.714.4840
Fax: 303.714.4800
Web: samuelengineering.com

PIPELINE TYPICAL
SLOPE BREAKER WITH LONGTITUDINAL & CROSS SLOPES (SHT. 3 OF 3)

DRAWING NUMBER
BMP-TYP-003
REV A

CAD File: S:\Projects\25020_Equinox_Pipeline\CAD\Pipeline\Drawings\Typicals\EQUINOX-TYPICALS.dwg
Plot Date: Tuesday, June 9, 2026 6:53:20 AM Plotted By: Jeff Schilz
MonochromeLetb

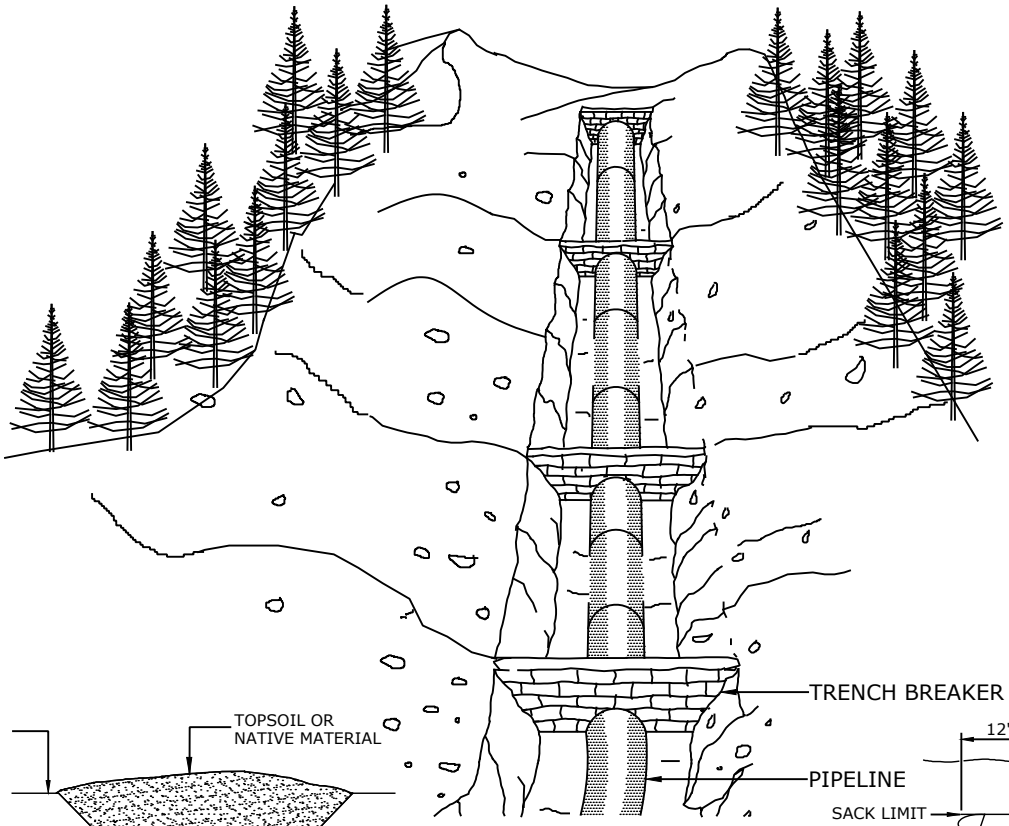

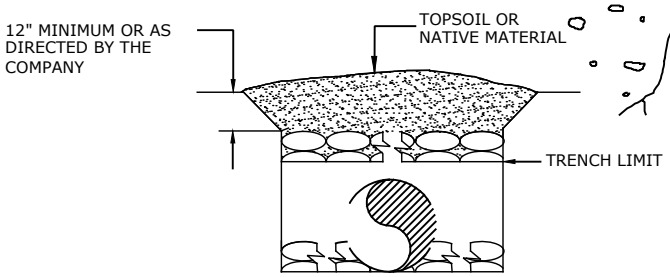

CROSS SECTION

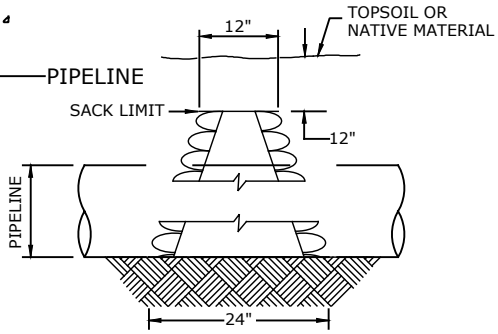

SIDE VIEW

NOTES:

1. TRENCH BREAKERS SHALL BE INSTALLED:
   * ON SLOPES ALONG THE TRENCH LINE WHERE THE NATURAL DRAINAGE PATTERN, PROFILE, AND TYPE OF BACKFILL MATERIAL MAY RESULT IN LOSS OF BACKFILL MATERIAL OR ALTERATION OF THE NATURAL PATTERN
   * AT THE BASE OF SLOPES ADJACENT TO WATERBODIES AND WETLANDS
   * WHERE NEEDED TO AVOID DRAINING A WETLAND
   * ON UPLAND SLOPES, AT THE SAME SPACING AS SLOPE BREAKERS AND UP SLOPE OF SLOPE BREAKERS
   * IN AGRICULTURAL $\geq$ 5 PERCENT LAND AND RESIDENTIAL AREAS WHERE PERMANENT SLOPE BREAKERS ARE NOT TYPICALLY INSTALLED, AT THE SAME SPACING AS IF PERMANENT SLOPE BREAKERS WHERE REQUIRED.

2. BURLAP SACKS SHALL BE FILLED WITH A MINIMUM OF 55 LBS OF WASHED SAND.

3. BREAKER SPACING AND CONFIGURATION, INCLUDING THE NEED TO KEY THE BREAKER INTO THE UNDISTURBED SOIL AT THE SIDES AND BOTTOM OF THE TRENCH, MAY CHANGE AS DETERMINED BY COMPANY REPRESENTATIVE.

4. ALL MATERIALS SHALL BE SUPPLIED BY CONTRACTOR.

5. INSTALL ONE TRENCH BREAKER UNDER EVERY SLOPE BREAKER.

REV	REVISION DESCRIPTION	DATE	BY	CHK	APP
A	ISSUED FOR PERMITTING	--/--/--	PGH	SMH	BWY

This document is copyrighted and is an instrument of service by Samuel Engineering (SE). It was prepared solely for the Owner's/Client's use on this project only. Use, copy or disclosure of any information shown, in whole or in part, without SE's consent, is strictly prohibited, is a copyright breach and may be prosecuted. Any unauthorized reuse shall be at the sole risk of the user.

SAMUEL ENGINEERING
WE PROVIDE SOLUTIONS
8450 E. Crescent Parkway, Suite 200
Greenwood Village, CO 80111
Phone: 303.714.4840
Fax: 303.714.4800
Web: samuelengineering.com

PIPELINE TYPICAL
TRENCH BREAKER REQUIREMENTS

DRAWING NUMBER
BMP-TYP-004
REV A

CAD File: S:\Projects\25020_Equinox_Pipeline\CAD\Pipeline\Drawings\Typicals\EQUINOX-TYPICALS.dwg
Plot Date: Tuesday, June 9, 2026 6:53:24 AM Plotted By: Jeff Schilz
Monochrome.ctb

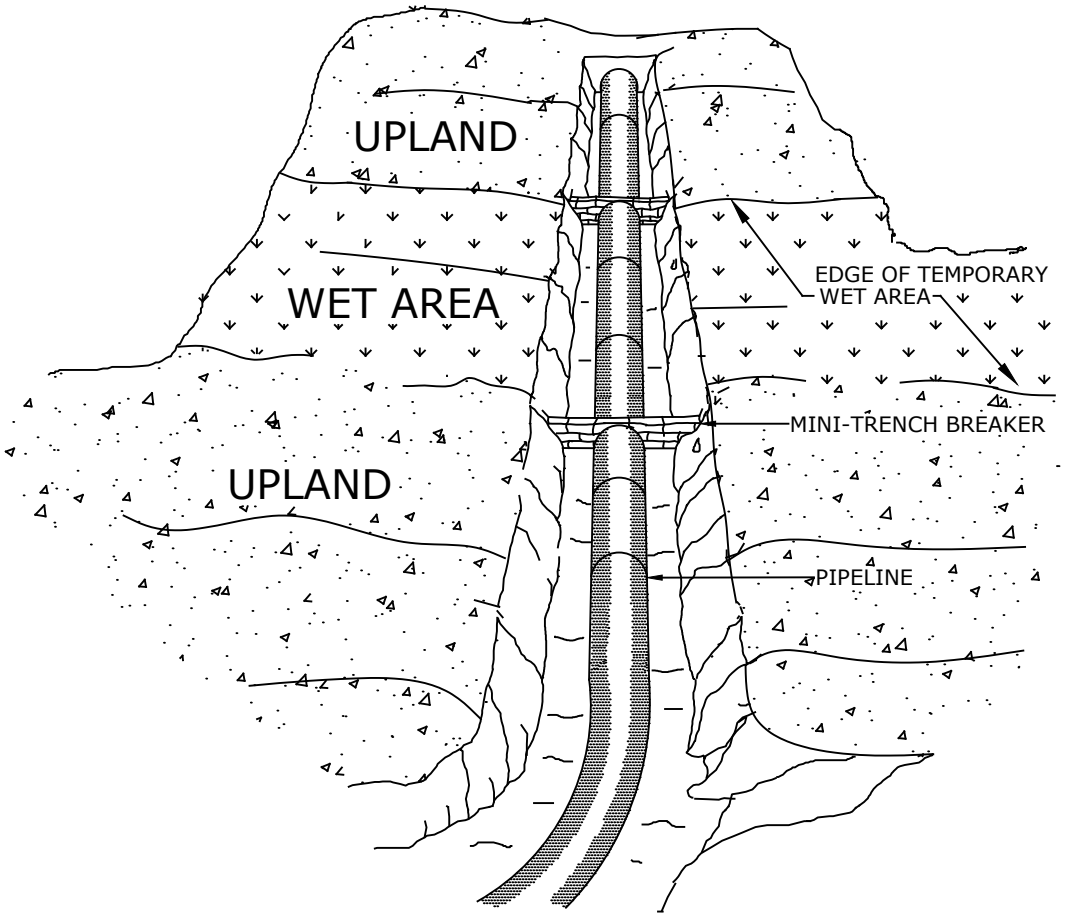

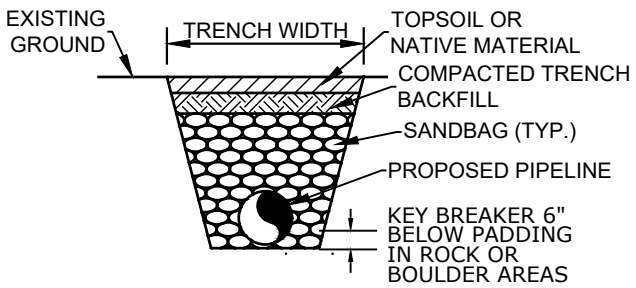

CROSS SECTION

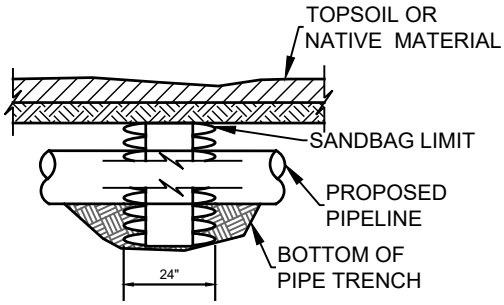

SIDE VIEW

NOTES:

1. MINI-TRENCH BREAKERS SHALL BE INSTALLED AT EDGE OF EACH TEMPORARY WET AREA.
2. BURLAP SACKS SHALL BE FILLED WITH A MINIMUM OF 55 LBS. OF WASHED SAND.
3. BREAKER CONFIGURATION MAY BE CHANGED AS DETERMINED BY COMPANY REPRESENTATIVE.

REV	REVISION DESCRIPTION	DATE	BY	CHK	APP
A	ISSUED FOR PERMITTING	--/--/--	PGH	SMH	BWY

This document is copyrighted and is an instrument of service by Samuel Engineering (SE). It was prepared solely for the Owner's/Client's use on this project only. Use, copy or disclosure of any information shown, in whole or in part, without SE's consent, is strictly prohibited, is a copyright breach and may be prosecuted. Any unauthorized reuse shall be at the sole risk of the user.

SAMUEL ENGINEERING
WE PROVIDE SOLUTIONS
8450 E. Crescent Parkway, Suite 200
Greenwood Village, CO 80111
Phone: 303.714.4840
Fax: 303.714.4800
Web: samuelengineering.com

PIPELINE TYPICAL
MINI-TRENCH BREAKER

DRAWING NUMBER
BMP-TYP-005
REV A

CAD File: S:\Projects\25020_Equinox_Pipeline\CAD\Pipeline\Drawings\Typicals\EQUINOX-TYPICALS.dwg
Plot Date: Tuesday, June 9, 2026 6:53:29 AM Plotted By: Jeff Schilz
Monochrome.ctb

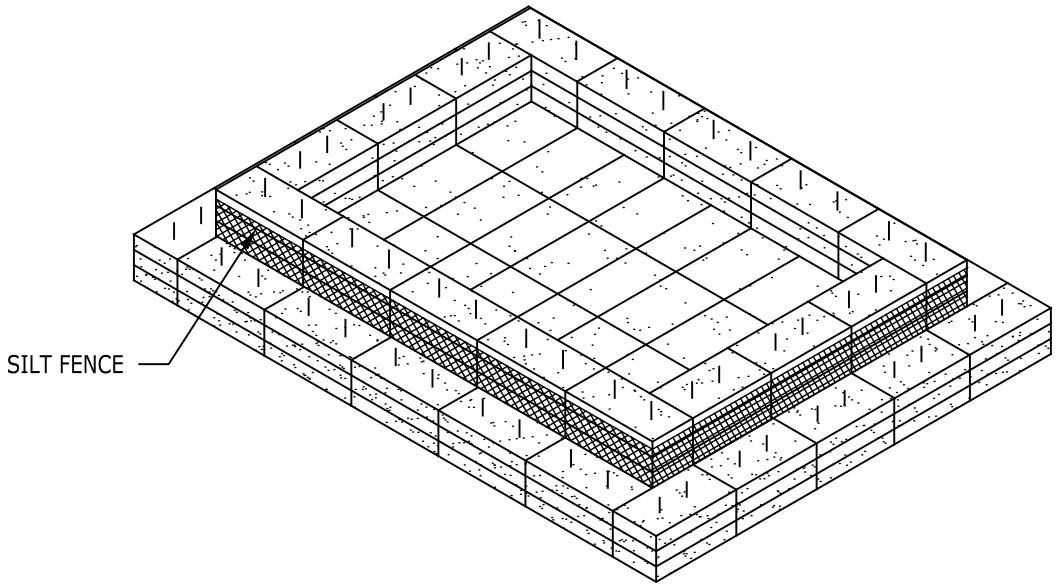

PERSPECTIVE VIEW

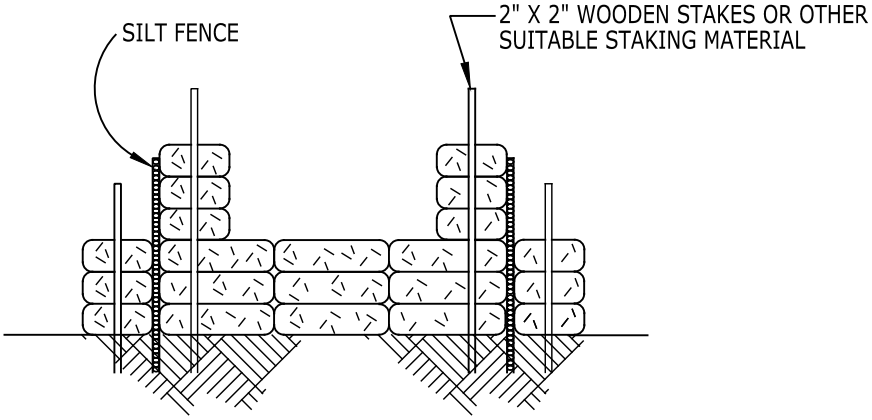

OPTION 1

NOTES:

1. INSTALL A STRAW BALE DEWATERING STRUCTURE WHEREVER IT IS NECESSARY AND AS DIRECTED BY THE COMPANY'S REPRESENTATIVE TO PREVENT THE FLOW OF HEAVILY SILT LADEN WATER INTO WATER BODIES OR WETLANDS.

2. DISCHARGE SITE SHALL BE WELL VEGETATED AND THE TOPOGRAPHY OF THE SITE SUCH THAT WATER WILL FLOW AWAY FROM ANY WORK AREAS. THE AREA DOWN SLOPE FROM THE DEWATERING SITE MUST BE REASONABLY PLANE OR STABILIZED BY VEGETATION OR OTHER MEANS TO ALLOW THE FILTERED WATER TO CONTINUE AS SHEET FLOW.

3. IN AREAS OF HIGHLY ERODIBLE SOILS, LINE ENTIRE STRUCTURE WITH GEOTEXTILE FILTER FABRIC, PLASTIC SHEETING, OR STRAW.

4. THE DIMENSIONS OF THE STRUCTURE SHALL BE DETERMINED IN THE FIELD BASED UPON SITE CONDITIONS AND/OR ANTICIPATED DISCHARGE RATES.

5. DISCHARGE RATES SHALL BE SUCH THAT WATER WILL NOT OVERFLOW THE TOP OF THE STRUCTURE.

6. INSTALL A SPLASH PUP IF THE DISCHARGE VELOCITY IS EXCESSIVE (BMP-TYP-023).

REV	REVISION DESCRIPTION	DATE	BY	CHK	APP
A	ISSUED FOR PERMITTING	--/--/--	PGH	SMH	BWY

This document is copyrighted and is an instrument of service by Samuel Engineering (SE). It was prepared solely for the Owner's/Client's use on this project only. Use, copy or disclosure of any information shown, in whole or in part, without SE's consent, is strictly prohibited, is a copyright breach and may be prosecuted. Any unauthorized reuse shall be at the sole risk of the user.

SAMUEL ENGINEERING
WE PROVIDE SOLUTIONS
8450 E. Crescent Parkway, Suite 200
Greenwood Village, CO 80111
Phone: 303.714.4840
Fax: 303.714.4800
Web: samuelengineering.com

PIPELINE TYPICAL
STRAW BALE DEWATERING STRUCTURE
LARGE VOLUME - OPTION 1 (SHT. 1 OF 2)

DRAWING NUMBER
BMP-TYP-006
REV A

CAD File: S:\Projects\25020_Equinox_Pipeline\CAD\Pipeline\Drawings\Typicals\EQUINOX-TYPICALS.dwg
Plot Date: Tuesday, June 9, 2026 6:53:33 AM Plotted By: Jeff Schilz
Monochrome.ctb

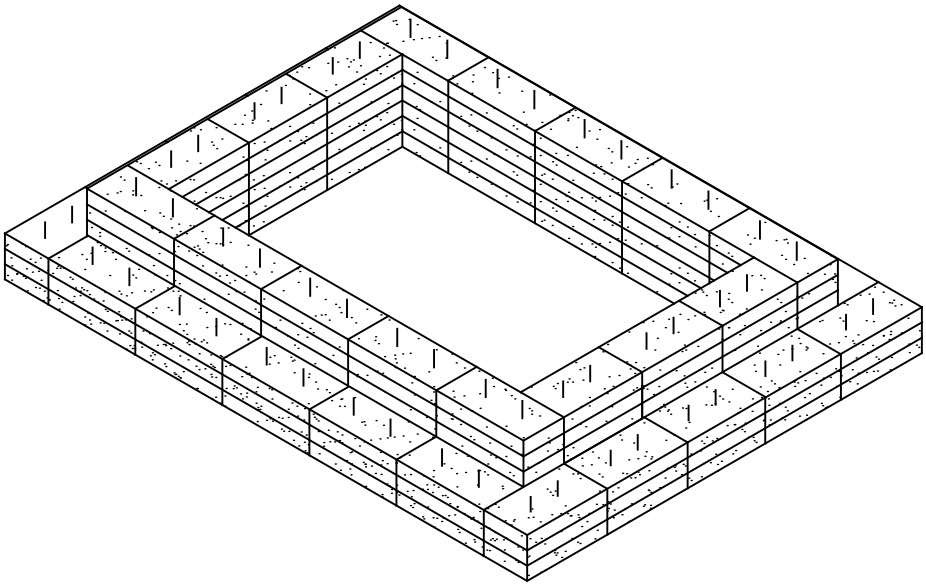

PERSPECTIVE VIEW

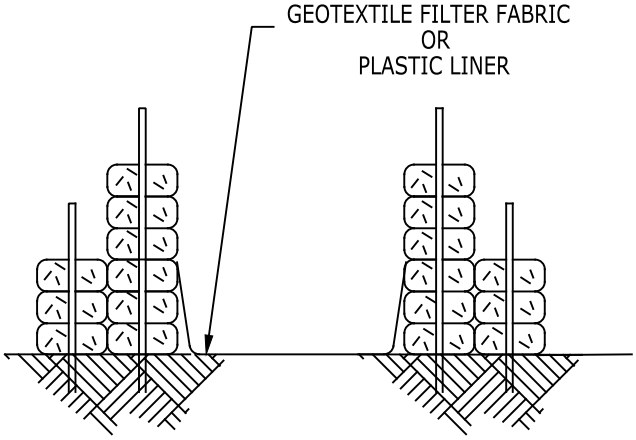

OPTION 2

NOTES:

1. INSTALL A STRAW BALE DEWATERING STRUCTURE WHEREVER IT IS NECESSARY AND AS DIRECTED BY THE COMPANY'S REPRESENTATIVE TO PREVENT THE FLOW OF HEAVILY SILT LADEN WATER INTO WATER BODIES OR WETLANDS.
2. DISCHARGE SITE SHALL BE WELL VEGETATED AND THE TOPOGRAPHY OF THE SITE SUCH THAT WATER WILL FLOW AWAY FROM ANY WORK AREAS. THE AREA DOWN SLOPE FROM THE DEWATERING SITE MUST BE REASONABLY PLANE OR STABILIZED BY VEGETATION OR OTHER MEANS TO ALLOW THE FILTERED WATER TO CONTINUE AS SHEET FLOW.
3. LINE ENTIRE STRUCTURE WITH GEOTEXTILE FILTER FABRIC, PLASTIC SHEETING, OR STRAW.
4. THE DIMENSIONS OF THE STRUCTURE SHALL BE DETERMINED IN THE FIELD BASED UPON SITE CONDITIONS AND ANTICIPATED DISCHARGE RATES.
5. DISCHARGE RATES SHALL BE SUCH THAT WATER WILL NOT OVERFLOW THE TOP OF THE STRUCTURE.
6. INSTALL A SPLASH PUP IF THE DISCHARGE VELOCITY IS EXCESSIVE (BMP-TYP-023).

REV	REVISION DESCRIPTION	DATE	BY	CHK	APP
A	ISSUED FOR PERMITTING	--/--/--	PGH	SMH	BWY

This document is copyrighted and is an instrument of service by Samuel Engineering (SE). It was prepared solely for the Owner's/Client's use on this project only. Use, copy or disclosure of any information shown, in whole or in part, without SE's consent, is strictly prohibited, is a copyright breach and may be prosecuted. Any unauthorized reuse shall be at the sole risk of the user.

SAMUEL ENGINEERING
WE PROVIDE SOLUTIONS
8450 E. Crescent Parkway, Suite 200
Greenwood Village, CO 80111
Phone: 303.714.4840
Fax: 303.714.4800
Web: samuelengineering.com

PIPELINE TYPICAL
STRAW BALE DEWATERING STRUCTURE
LARGE VOLUME - OPTION 2 (SHT. 2 OF 2)

DRAWING NUMBER
BMP-TYP-007
REV A

CAD File: S:\Projects\25020_Equinox_Pipeline\CAD\Pipeline\Drawings\Typicals\EQUINOX-TYPICALS.dwg
Plot Date: Tuesday, June 9, 2026 6:53:38 AM Plotted By: Jeff Schilz
Monochrome.ctb

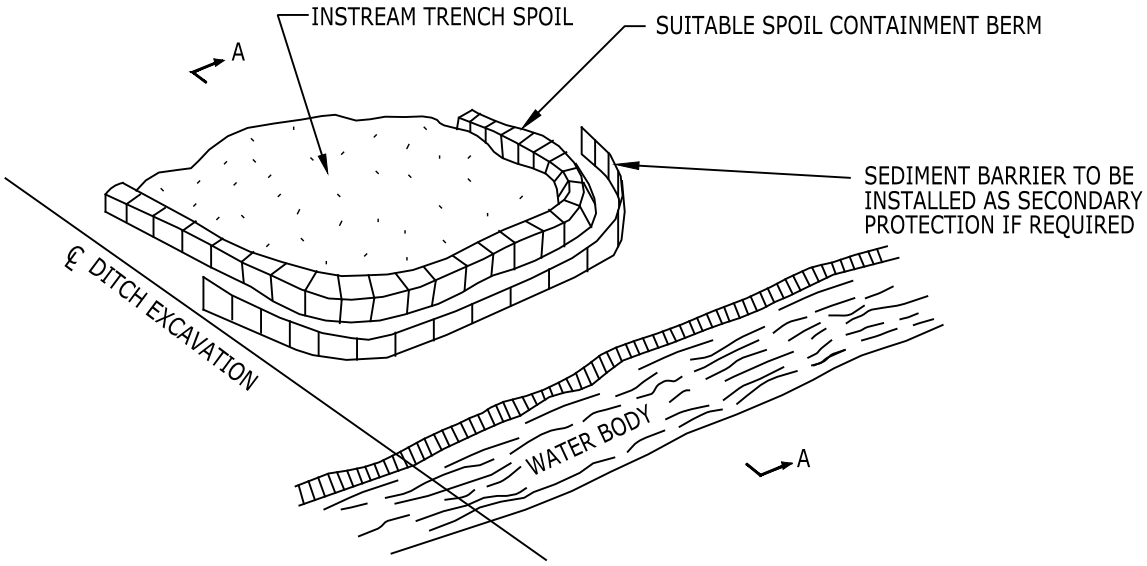

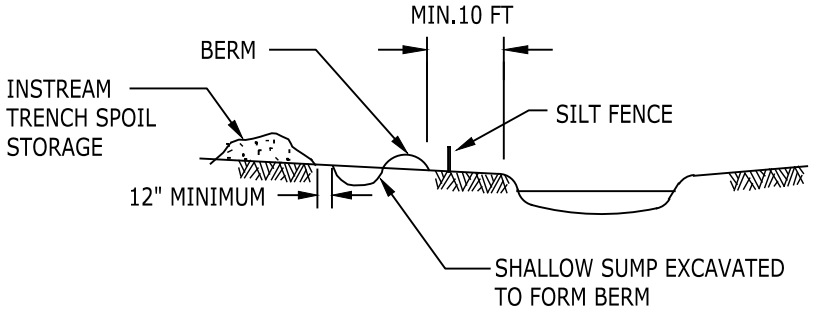

SECTION A-A

NOTE:

1. SOIL CONTAINMENT BERMS ARE TO BE USED WHERE INSTREAM TRENCH SPOIL COULD REENTER THE WATERBODY DIRECTLY OR INDIRECTLY AND WITH SIMULTANEOUS UTILIZATION OF SEDIMENT BARRIERS IF REQUIRED.
2. MATERIAL USED FOR THE CONTAINMENT BERM SHALL BE A MINIMUM OF 10 FT. FROM THE WATER'S EDGE. IT SHOULD BE KEPT TO A HEIGHT WHICH REMAINS STABLE DURING THE CONSTRUCTION PERIOD.
3. CARE SHOULD BE TAKEN THAT THE SPOIL PILE DOES NOT OVERTOP THE CONTAINMENT BERM.
4. THE CONTAINMENT BERM SHALL BE DISMANTLED AND THE SITE RESTORED TO THE ORIGINAL CONDITION UPON COMPLETION OF THE WATER CROSSING.
5. WHERE POSSIBLE, RIPARIAN VEGETATION SHALL BE LEFT IN PLACE.
6. STAGED MOVEMENT OF INSTREAM SPOIL MAY BE REQUIRED IF QUANTITIES ARE EXCESSIVE.
7. CARE AND ATTENTION MUST BE TAKEN TO ENSURE SPOIL CONTAINMENT BERMS ARE MAINTAINED.
8. FULL CONSIDERATION FOR OVERALL SLOPE STABILITY IS REQUIRED WHEN SELECTING A SPOIL CONTAINMENT LOCATION.

REV	REVISION DESCRIPTION	DATE	BY	CHK	APP
A	ISSUED FOR PERMITTING	--/--/--	PGH	SMH	BWY

This document is copyrighted and is an instrument of service by Samuel Engineering (SE). It was prepared solely for the Owner's/Client's use on this project only. Use, copy or disclosure of any information shown, in whole or in part, without SE's consent, is strictly prohibited, is a copyright breach and may be prosecuted. Any unauthorized reuse shall be at the sole risk of the user.

SAMUEL ENGINEERING
WE PROVIDE SOLUTIONS
8450 E. Crescent Parkway, Suite 200
Greenwood Village, CO 80111
Phone: 303.714.4840
Fax: 303.714.4800
Web: samuelengineering.com

PIPELINE TYPICAL
TEMPORARY SOIL CONTAINMENT BERM

DRAWING NUMBER
BMP-TYP-008
REV A

CAD File: S:\Projects\25020_Equinox_Pipeline\CAD\Pipeline\Drawings\Typicals\EQUINOX-TYPICALS.dwg
Plot Date: Tuesday, June 9, 2026 6:53:43 AM Plotted By: Jeff Schilz
Monochrome.ctb

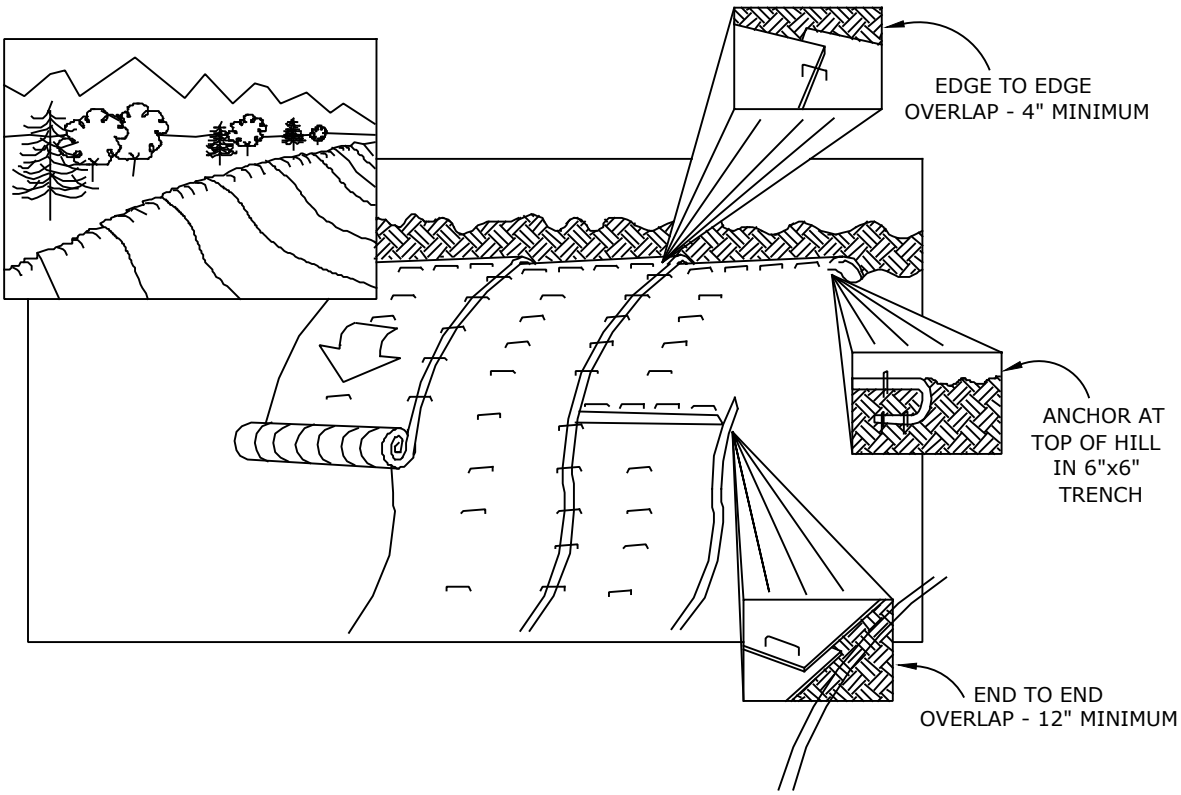

NOTES:

1. EROSION CONTROL MATTING (BLANKETS) SHALL BE USED AT THE FOLLOWING LOCATIONS:
   * ALL SLOPES OVER 33%.
   * AS DIRECTED BY THE COMPANY REPRESENTATIVE.
   * RILLS

2. THE EROSION CONTROL MAT SHALL BE MADE OF BIODEGRADABLE NATURAL FIBER, UNLESS OTHERWISE APPROVED BY THE COMPANY REPRESENTATIVE.

3. THE EROSION CONTROL MAT SHALL BE NORTH AMERICAN GREEN SC150 OR SC150BN OR A COMPANY APPROVED EQUIVALENT WITH THESE SPECIFICATIONS:
   * 70% STRAW AND 30% COCONUT (COIR) FABRIC
   * WEIGHT OF 0.5 LBS/YD
   * UNDERLAIN WITH PHOTODEGRADABLE PLASTIC NETTING OR NATURAL FIBER NET AND OVERLAIN WITH UV STABILIZED PLASTIC
   * NETTING OR NATURAL FIBER NET. SHALL BE INSTALLED PER MANUFACTURER RECOMMENDATIONS.

4. STAPLES SHALL BE MADE OF 11 GAUGE WIRE, U-SHAPED WITH 6" LEGS AND A 1" CROWN AND GROUND FOR THE FULL LENGTH OF THE STAPLE LEGS. LONGER STAPLES MAY BE REQUIRED IN LOOSE OR SANDY SOILS.

5. MATTING SHALL BE INSTALLED ACCORDING TO MANUFACTURER'S SPECIFICATIONS OR AS STATED BELOW:
   * THE TOP OF THE BLANKET SHALL EXTEND 3' PAST THE UPPER EDGE OF THE SLOPE.
   * ANCHOR ("KEY") THE UPPER EDGE OF THE BLANKET INTO THE SLOPE IN A 6" WIDE BY 6" DEEP TRENCH. BLANKET ROLL
   * SHALL BE ON UPHILL SIDE OF TRENCH. DOUBLE STAPLE EVERY 12" BEFORE BACKFILLING AND COMPACTING TRENCH.
   * BRING MAT ROLL BACK OVER THE TOP OF THE TRENCH AND CONTINUE TO ROLL DOWN SLOPE. STAPLE EVERY 12" WHERE
   * MAT EXITS THE TRENCH AT TOP OF SLOPE.
   * THE EDGES OF PARALLEL BLANKETS SHALL BE OVERLAPPED A MIN. OF 4" AND STAPLED EVERY 12" THE LENGTH OF THE EDGE.
   * WHEN BLANKETS ARE SPLICED DOWN SLOPE TO ADJOINING MATS, THE UPPER BLANKET SHALL BE PLACED OVER THE LOWER
   * MAT (SHINGLE STYLE) WITH APPROXIMATELY 12" OF OVERLAP. STAPLE THROUGH THE OVERLAPPED AREA EVERY 12".
   * STAPLE DOWN THE CENTER OF THE BLANKET(S). TWO STAPLES IN EVERY SQUARE YARD.
   * STAPLE ACROSS THE BOTTOM OF THE EROSION CONTROL MATTING EVERY 12".

6. THE EROSION CONTROL MATTING SHALL MAKE UNIFORM CONTACT WITH THE SOIL UNDERNEATH WITH NO BRIDGING OF RILLS OR GULLIES.

7. MONITOR FOR WASHOUTS, STAPLE INTEGRITY OR MAT MOVEMENT. PRIOR TO COMPLETION OF CONSTRUCTION, REPLACE OR REPAIR AS NECESSARY.

REV	REVISION DESCRIPTION	DATE	BY	CHK	APP
A	ISSUED FOR PERMITTING	--/--/--	PGH	SMH	BWY

This document is copyrighted and is an instrument of service by Samuel Engineering (SE). It was prepared solely for the Owner's/Client's use on this project only. Use, copy or disclosure of any information shown, in whole or in part, without SE's consent, is strictly prohibited, is a copyright breach and may be prosecuted. Any unauthorized reuse shall be at the sole risk of the user.

SAMUEL ENGINEERING
WE PROVIDE SOLUTIONS
8450 E. Crescent Parkway, Suite 200
Greenwood Village, CO 80111
Phone: 303.714.4840
Fax: 303.714.4800
Web: samuelengineering.com

PIPELINE TYPICAL
EROSION CONTROL MATTING UPLAND SLOPES

DRAWING NUMBER
BMP-TYP-009
REV A

CAD File: S:\Projects\25020_Equinox_Pipeline\CAD\Pipeline\Drawings\Typicals\EQUINOX-TYPICALS.dwg
Plot Date: Tuesday, June 9, 2026 6:53:49 AM Plotted By: Jeff Schilz
Monochrome.ctb

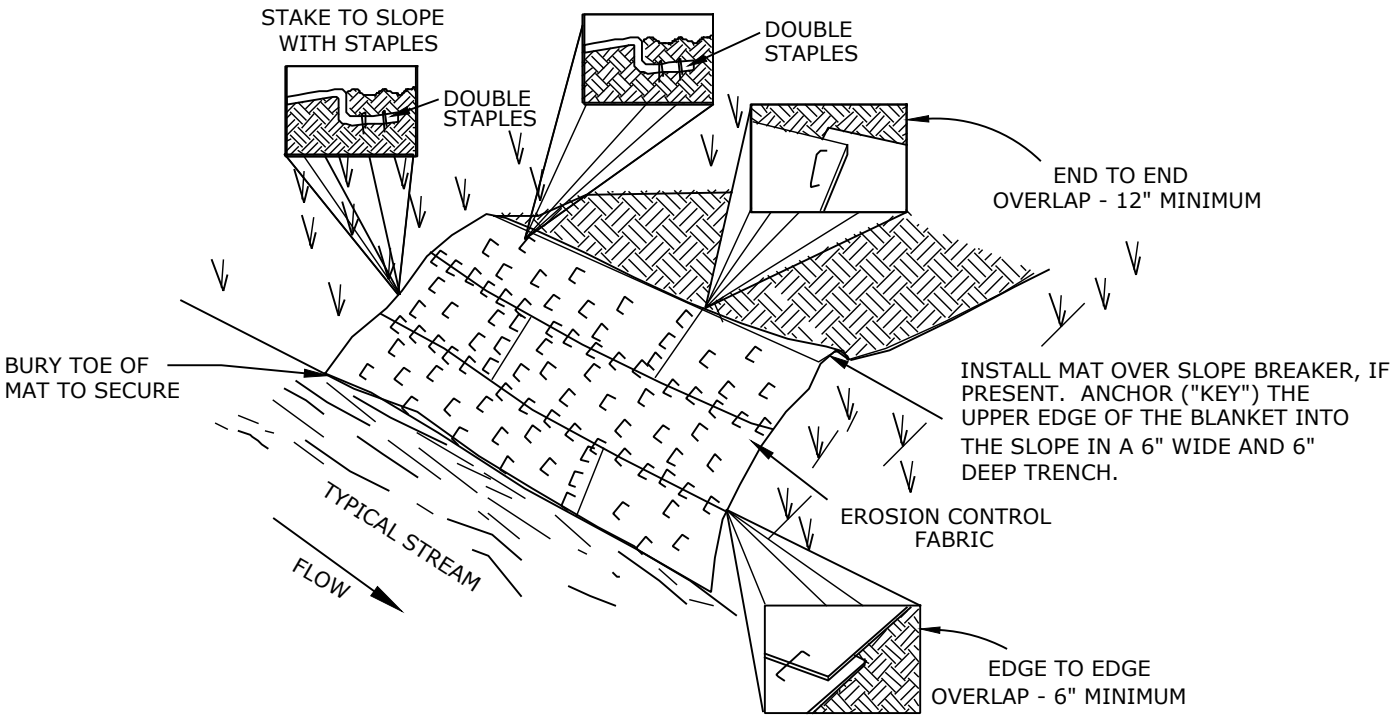

NOTES:

1. EROSION CONTROL MATTING (BLANKETS) SHALL BE PLACED ON THE BANKS OF ALL WATERBODIES WHERE VEGETATION HAS BEEN REMOVED, RILLS, AND/OR AS DIRECTED BY THE COMPANY REPRESENTATIVE.
2. THE TYPE OF EROSION CONTROL MAT SHALL BE MADE OF BIODEGRADABLE NATURAL FIBERS, UNLESS OTHERWISE APPROVED BY THE COMPANY REPRESENTATIVE. EROSION CONTROL MATS SHALL BE FURNISHED IN CONTINUOUS ROLLS OF 30' OR GREATER WITH A MINIMUM WIDTH OF 4'.
3. THE COIR FIBER TWINE MESH EROSION CONTROL MAT SHALL BE BON TERRA CF7 OR CURLEX OR A COMPANY APPROVED EQUIVALENT WITH THESE SPECIFICATIONS:
   * 100% WOVEN COCONUT (COIR) FABRIC.
   * WEIGHT OF 1.2 LBS/YD.
   * 50% OPEN AREA.
4. STAPLES SHALL BE MADE OF 11 GAUGE WIRE, U-SHAPED WITH 6" LEGS AND A 1" CROWN. STAPLES SHALL BE DRIVEN INTO THE GROUND FOR THE FULL LENGTH OF THE STAPLE LEGS. LONGER STAPLES MAY BE REQUIRED IN LOOSE OR SANDY SOILS.
5. MATTING SHALL BE INSTALLED ACCORDING TO MANUFACTURE SPECIFICATIONS OR AS STATED BELOW:
   * THE TOP OF THE BLANKET SHALL EXTEND A MINIMUM OF 2' PAST THE UPPER EDGE OF THE ORDINARY HIGH WATER MARK. IF A SLOPE BREAKER IS PRESENT ON THE APPROACH SLOPE, THE BLANKET SHALL EXTEND OVER THE CREST AND THE THROUGH OF THE SLOPE BREAKER.
   * INSTALL BLANKET(S) ACROSS THE SLOPE IN THE DIRECTION OF WATER FLOW.
   * ANCHOR ("KEY") THE UPSTREAM EDGE OF THE BLANKET(S) INTO THE SLOPE USING A 6" WIDE BY 6" DEEP TRENCH. DOUBLE STAPLE EVERY 12" BEFORE BACKFILLING AND COMPACTING TRENCH.
   * ANCHOR ("KEY") THE UPPER EDGE OF THE BLANKET INTO THE SLOPE IN A 6" WIDE BY 6" DEEP TRENCH. DOUBLE STAPLE EVERY 12" BEFORE BACKFILLING AND COMPACTING TRENCH.
   * THE EDGES OF PARALLEL BLANKETS SHALL BE OVERLAPPED A MINIMUM OF 6". THE UPPER BLANKET SHALL BE PLACED OVER THE LOWER BLANKET (SHINGLE STYLE) AND STAPLED EVERY 12" THE LENGTH OF THE EDGE.
   * WHEN BLANKET ENDS, THE UPSTREAM BLANKET SHALL BE PLACED OVER THE DOWNSTREAM BLANKET (SHINGLE STYLE) WITH AT LEAST 12" OF OVERLAP. STAPLE THROUGH THE OVERLAPPED AREA EVERY 12".
   * STAPLE DOWN THE CENTER OF THE BLANKET(S) WITH THREE STAPLES IN EVERY SQUARE YARD.
   * STAPLE ACROSS THE BOTTOM OF THE EROSION CONTROL MATTING EVERY 12".
6. THE EROSION CONTROL MATTING SHALL MAKE UNIFORM CONTACT WITH THE SOIL UNDERNEATH WITH NO BRIDGING OF RILLS OR GULLIES.
7. MONITOR FOR WASHOUTS, STAPLE INTEGRITY OR MAT MOVEMENT PRIOR TO COMPLETION OF CONSTRUCTION. REPLACE OR REPAIR AS NECESSARY.

REV	REVISION DESCRIPTION	DATE	BY	CHK	APP
A	ISSUED FOR PERMITTING	--/--/--	PGH	SMH	BWY

This document is copyrighted and is an instrument of service by Samuel Engineering (SE). It was prepared solely for the Owner's/Client's use on this project only. Use, copy or disclosure of any information shown, in whole or in part, without SE's consent, is strictly prohibited, is a copyright breach and may be prosecuted. Any unauthorized reuse shall be at the sole risk of the user.

SAMUEL ENGINEERING
WE PROVIDE SOLUTIONS
8450 E. Crescent Parkway, Suite 200
Greenwood Village, CO 80111
Phone: 303.714.4840
Fax: 303.714.4800
Web: samuelengineering.com

PIPELINE TYPICAL
EROSION CONTROL MATTING
STREAMBANKS

DRAWING NUMBER
BMP-TYP-010
REV A

CAD File: S:\Projects\25020_Equinox_Pipeline\CAD\Pipeline\Drawings\Typicals\EQUINOX-TYPICALS.dwg
Plot Date: Tuesday, June 9, 2026 6:53:54 AM Plotted By: Jeff Schilz
Monochrome.ctb

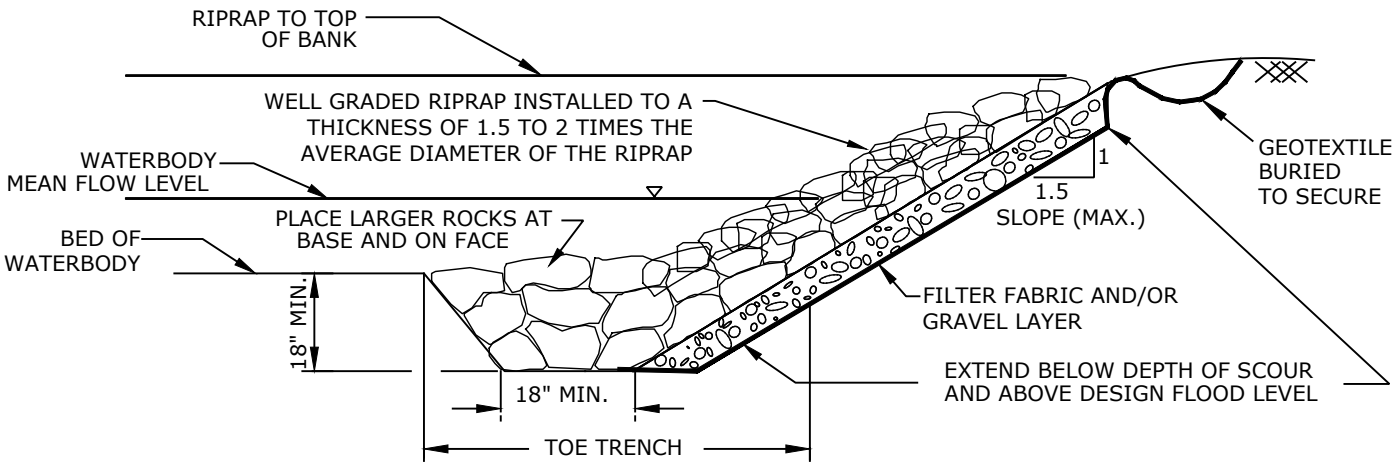

SECTION A-A

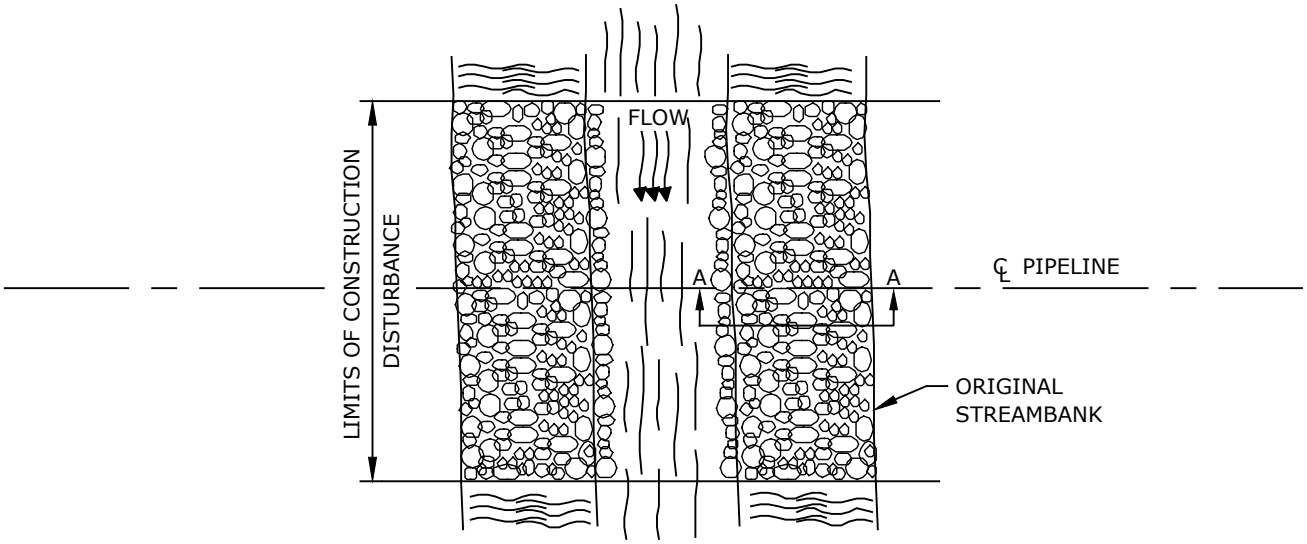

PLAN VIEW

NOTES:

1. CONTRACTOR TO ISSUE AN RFI TO COMPANY FOR APPROVAL OF THE USE OF THIS TYPICAL SHOULD THE SITUATION ARISE WHERE RIPRAP IS NEEDED AT A WATERBODY BANK.
2. STREAM BANK RIPRAP STRUCTURES SHALL CONSIST OF A LAYER OF STONE UNDERLAIN WITH APPROVED GEOTEXTILE FILTER FABRIC OR A GRAVEL FILTER BLANKET, DESIGNED TO PROTECT AND STABILIZE AREAS PRONE TO EROSION.
3. GRAVEL FILTER BLANKET SHALL MEET THE FOLLOWING SPECIFICATIONS:
   - HAVE A PERMEABILITY GREATER THAN THAT OF THE SUBGRADE SOIL.
   - IF A WELL-GRADED GRAVEL OR SAND-GRAVEL LAYER IS USED, THE LAYER SHALL BE A MINIMUM OF 6" THICK AND SPREAD IN A UNIFORM LAYER OVER THE SUBGRADE.
   - IF WATER TURBULENCE COULD RESULT IN EROSION OF BANK MATERIAL BETWEEN LARGE ROCKS (AS DETERMINED BY THE COMPANY REPRESENTATIVE), A GEOTEXTILE FILTER FABRIC SHALL BE USED BETWEEN THE GRAVEL LAYER AND THE RIPRAP.
4. THE GEOTEXTILE FILTER FABRIC SHALL BE PERMEATEX OR AN APPROVED EQUIVALENT MEETING THE FOLLOWING SPECIFICATIONS:
   (A) BE COMMERCIAL QUALITY NONWOVEN FABRIC DESIGNED FOR RIPRAP UNDERLAYMENT;
   (B) BE A MINIMUM OF 20 MILS IN THICKNESS;
   (C) HAVE A GRAB STRENGTH BETWEEN 90 TO 120 POUNDS;
   (D) HAVE A GREATER THAN 4% OPEN AREA (U.S. STANDARD SIEVE NUMBER 100 (0.15MM.)
   (E) HAVE A DENSITY OF 8oz PER SQUARE YARD.
5. THE USE OF RIPRAP SHALL BE LIMITED TO AREAS WHERE FLOWING CONDITIONS PREVENT EFFECTIVE VEGETATIVE STABILIZATION TECHNIQUES. PLACEMENT OF RIPRAP MAY BE SUBJECT TO PERMITTING OR GOVERNING AUTHORITY.

REV	REVISION DESCRIPTION	DATE	BY	CHK	APP
A	ISSUED FOR PERMITTING	--/--/--	PGH	SMH	BWY

This document is copyrighted and is an instrument of service by Samuel Engineering (SE). It was prepared solely for the Owner's/Client's use on this project only. Use, copy or disclosure of any information shown, in whole or in part, without SE's consent, is strictly prohibited, is a copyright breach and may be prosecuted. Any unauthorized reuse shall be at the sole risk of the user.

SAMUEL ENGINEERING
WE PROVIDE SOLUTIONS
8450 E. Crescent Parkway, Suite 200
Greenwood Village, CO 80111
Phone: 303.714.4840
Fax: 303.714.4800
Web: samuelengineering.com

PIPELINE TYPICAL
RIPRAP AT WATERBODY BANKS
(SHT. 1 OF 2)

DRAWING NUMBER
BMP-TYP-011
REV A

CAD File: S:\Projects\25020_Equinox_Pipeline\CAD\Pipeline\Drawings\Typicals\EQUINOX-TYPICALS.dwg
Plot Date: Tuesday, June 9, 2026 6:53:58 AM Plotted By: Jeff Schilz
Monochrome.ctb

NOTES:

6. RIPRAP (ROCK) SHALL HAVE THE FOLLOWING SPECIFICATIONS:
   - RIPRAP SHALL BE DENSE, DURABLE, EQUIDIMENSIONAL (NOT FLAT OR THIN), ANGULAR AND CLEAN.
   - SIZE OF RIPRAP USED SHALL BE DEPENDENT UPON BANK SLOPE AND WATER VELOCITY. THE ROCK WILL GENERALLY BE APPROXIMATELY 12" TO 18" IN DIAMETER.
   - WHERE PRACTICABLE, NATIVE ROCK SIMILAR IN APPEARANCE TO ADJACENT ROCK OR SOIL SHALL BE UTILIZED AS RIPRAP.
7. WATERBODY RIPRAP SHALL BE CONSTRUCTED AS FOLLOWS:
   - CONSTRUCT RIPRAP BOUNDARIES IN A MANNER SUCH THAT THEY SHALL NOT BE UNDERMINED FROM THE SIDE.
   - REMOVE ALL STUMPS, ORGANIC MATTER AND WORK MATERIAL.
   - GRADE THE BANK TO A MAXIMUM SLOPE OF 1.5:1.
   - CUT THE SUBGRADE SUFFICIENTLY DEEP FOR THE FINISHED GRADE OF THE RIPRAP TO BE AT THE SAME ELEVATION AS SURROUNDING AREA.
   - COMPACT THE SUBGRADE TO A DENSITY APPROXIMATELY EQUAL TO THE SURROUNDING SOILS.
   - CONSTRUCT TOE OF TRENCH TO "KEY" IN BOTTOM OF ARMOR PROTECTION. THE TRENCH SHALL BE A MINIMUM OF 18" WIDE AND 18" DEEP.
   - PLACE THE FILTER BLANKET (GRAVEL, GRAVEL-SAND OR GEOTEXTILE) AND RIPRAP (ROCK) IMMEDIATELY FOLLOWING GRADING AND SUBGRADE COMPACTION.
   - PLACE ANY FILTER FABRIC USED DIRECTLY ON THE PREPARED SUBGRADE UNLESS EXCESSIVE TURBULENCE EXISTS (SEE NOTE 2 ABOVE). EDGES OF ADJOINING FABRIC PIECES SHALL BE OVERLAPPED A MINIMUM OF 12" (UPSTREAM FABRIC OVER TOP OF DOWNSTREAM FABRIC) AND ANCHOR PINS SHALL BE SPACED A MAXIMUM OF 36" ALONG THE OVERLAP. BURY THE OUTSIDE EDGES OF THE CLOTH A MINIMUM OF 12" BELOW GROUND AROUND THE RIPRAP PERIMETER.
   - PLACE RIPRAP ON SLOPE TO BE PROTECTED. INSTALL RIPRAP TO A DEPTH APPROXIMATELY 1.5 TO 2 TIMES THE DIAMETER OF THE ROCK OR AT LEAST 12" THICK ON THE SLOPE AND THICKER AT BASE. LARGER ROCK WILL BE PLACED AT THE BASE AND FACE OF THE SLOPE.
8. BECAUSE RIPRAP SHALL BE PLACED BY EQUIPMENT, SUFFICIENT PRECAUTIONS MUST BE TAKEN TO AVOID DAMAGING THE FILTER FABRIC OR CAUSING EXCESSIVE GRAVEL MOVEMENT THAT EXPOSES SUBGRADE MATERIAL TO HYDRAULIC FORCES. SHOULD DAMAGE TO THE FILTER FABRIC OCCUR DURING RIPRAP PLACEMENT, THE RIPRAP SHALL BE REMOVED AND THE SHEET SHALL BE REPAIRED BY ADDING ANOTHER LAYER OF FILTER MATERIAL WITH A MINIMUM OVERLAP OF 12" OVER ORIGINAL MATERIAL.
9. THE RIPRAP STRUCTURE SHALL BE INSPECTED DURING GENERAL RIGHT-OF-WAY MONITORING FOR UNDERMINING AND ROCK LOSS. PRIOR TO COMPLETION OF CONSTRUCTION REPAIRS TO THE RIPRAP SHALL BE CARRIED OUT AS NECESSARY.

REV	REVISION DESCRIPTION	DATE	BY	CHK	APP
A	ISSUED FOR PERMITTING	--/--/--	PGH	SMH	BWY

This document is copyrighted and is an instrument of service by Samuel Engineering (SE). It was prepared solely for the Owner's/Client's use on this project only. Use, copy or disclosure of any information shown, in whole or in part, without SE's consent, is strictly prohibited, is a copyright breach and may be prosecuted. Any unauthorized reuse shall be at the sole risk of the user.

SAMUEL ENGINEERING
WE PROVIDE SOLUTIONS
8450 E. Crescent Parkway, Suite 200
Greenwood Village, CO 80111
Phone: 303.714.4840
Fax: 303.714.4800
Web: samuelengineering.com

PIPELINE TYPICAL
RIPRAP AT WATERBODY BANKS
(SHT. 2 OF 2)

DRAWING NUMBER
BMP-TYP-012
REV A

CAD File: S:\Projects\25020_Equinox_Pipeline\CAD\Pipeline\Drawings\Typicals\EQUINOX-TYPICALS.dwg
Plot Date: Tuesday, June 9, 2026 6:54:03 AM Plotted By: Jeff Schilz
Monochrome.ctb

NOTES:

APPLICATIONS AND LOCATIONS

1. HYDRO-MULCH WITH TACKIFIER SHALL BE USED AT LOCATIONS IDENTIFIED IN THE GEOTECHINCAL PLAN, RECLAMATION PLAN, AND/OR AS DIRECTED BY THE COMPANY REPRESENTATIVE TO PROTECT SOIL AGAINST EROSION.
2. THE CONTRACTOR SHALL BE REQUIRED TO USE EXTENSION HOSES TO REACH INACCESSIBLE AREAS. WHERE THE USE OF EXTENSION HOSES IS NOT SUFFICIENT TO REACH AREAS, EROSION CONTROL MATTING CAN BE SUBSTITUTED.
3. HYDRO-MULCH AND TACKIFIER SHALL BE APPLIED AT A RATE OF 3,000 AND 100 LBS/ACRE RESPECTIVELY, IN A SINGLE APPLICATION. HYDRO-MULCH AND TACKIFIER SHALL PRODUCE A UNIFORM, MAT-LIKE COVERING ON THE GROUND.
4. WHEN DIRECTED BY THE COMPANY REPRESENTATIVE, TOPSOIL STOCKPILES SHALL BE EITHER WET WITH WATER OR TACKIFIER TO PROVIDE AN UNERODABLE CRUST OR TO CONTROL WIND EROSION.

HYDRO-MULCH MATERIAL

1. THE HYDRO-MULCH MATERIAL SHALL CONSIST OF WOOD FIBERS MEETING THE FOLLOWING PHYSICAL AND CHEMICAL PROPERTIES:

* MOISTURE CONTENT	12% ± 3%
* ORGANIC MATTER (OVEN-DRIED BASIS)	99.2% ± 0.2%
* ASH CONTENT	0.7% ± 0.2%
* WATER HOLDING CAPACITY	100 GRAMS MINIMUM

NOTE: WATER HOLDING CAPACITY - 1000 GRAMS OF OVEN-DRIED MULCH SATURATED, DRANIED AND WEIGHED.

2. THE HYDRO-MULCH MATERIAL SHALL MEET THE FOLLOWING ADDITIONAL REQUIRMENTS:
   * THE FIBERS SHALL NOT CONTAIN ANY GROWTH OR GERMINATION INHABITATING FACTORS.
   * THE FIBERS SHALL NOT BE PRODUCED FROM RECYCLED MATERIAL SUCH AS SAWDUST, PAPER, CARDBOARD, OR PULP AND PAPER PLANT RESIDUE.
   * THE FIBERS SHALL BE DYED TO FACILITATE VISUAL METERING DURING APPLICATION.
3. HYDRO-MULCH SHALL BE SUPPLIED IN 50 POUND NET WEIGHT BAGS. EACH PACKAGE SHALL BE MARKED BY THE MANUFACTURE TO SHOW THE AIR-DRY WEIGHT CONTENT.
4. THE HYDRO-MULCH MATERIAL SHALL BE OF SUCH A CONSISTENCY THAT AFTER BEING COMBINED IN A SLURRY TANK WITH WATER AND APPROVED TACKIFIER, THE FIBERS IN THE MATERIAL SHALL BE UNIFORMLY SUSPENDED TO FORM A HOMOGENOUS SLURRY.
5. MULCH WHICH HAS BEEN DAMAGED BY MOISTURE OR OTHER MEANS SHALL NOT BE ACCEPTED.
6. IF REQUESTED, THE CONTRACTOR SHALL SUBMIT A MINIMUM 1-POUND BAG OF THE PRODUCT PROPOSED FOR USE ON THE PROJECT TO THE COMPANY FOR TESTING. OR, IF REQUESTED, THE CONTRACTOR SHALL SUBMIT A SIGNED STATEMENT CERTIFYING THAT THE MATERIAL FURNISHED HAS BEEN LABORATORY AND FEILD-TESTED AND THAT IS IT MEETS REQUIREMENTS FOR ITS INTENDED USE. THE COMPANY MAY ACCEPT THE HYDRO-MULCH MATERIAL FOR USE BASED ON A CERTIFICATE OF COMPLIANCE.

TACKIFIER MATERIAL

1. TACKIFIER SHALL MEET THE FOLLOWING REQUIREMENTS:
   * BE OF A BIODEGRADABLE ORGANIC FORMULATION. CONSIST OF SPECIFICALLY BLENDED COMPATIBLE HYDROCOLLIODS (SOLUBLE POLYSACCHARIDES, GAUR GUM OR PLANGAGE). STARCH-BASED TACKIFIERS ARE UNACCEPTABLE.
   * HAVE AN EQUILIBRIUM AIR-DRY MOISTURE CONTENT AT TIME OF MANUFACTURE OF 8% ± 2% WITH A MINIMUM WATER HOLDING CAPACITY OF 6.5 TIMES BY WEIGHT OF DRY MATERIAL.
   * BE ABLE TO HYDRATE AND UNIFORMLY DISPERSE IN CIRCULATING WATER TO FORM A HOMOGENOUS SLURRY AND REMAIN IN SUCH A STATE IN THE HYDRAULIC MIXING UNIT (USUALLY A HYDRO-MULCHER).
2. TACKIFIER SHALL BE SUPPLIED IN PACKAGES MARKED BY THE MANUFACTURE TO SHOW WEIGHT CONTENT. TACKIFIER WHICH HAS BEEN DAMAGED BY MOISTURE OR OTHER MEANS SHALL NOT BE ACCEPTED.

REV	REVISION DESCRIPTION	DATE	BY	CHK	APP
A	ISSUED FOR PERMITTING	--/--/--	PGH	SMH	BWY

This document is copyrighted and is an instrument of service by Samuel Engineering (SE). It was prepared solely for the Owner's/Client's use on this project only. Use, copy or disclosure of any information shown, in whole or in part, without SE's consent, is strictly prohibited, is a copyright breach and may be prosecuted. Any unauthorized reuse shall be at the sole risk of the user.

SAMUEL ENGINEERING
WE PROVIDE SOLUTIONS
8450 E. Crescent Parkway, Suite 200
Greenwood Village, CO 80111
Phone: 303.714.4840
Fax: 303.714.4800
Web: samuelengineering.com

PIPELINE TYPICAL
HYDRO-MULCH & TACKIFIER

DRAWING NUMBER
BMP-TYP-013
REV A

CAD File: S:\Projects\25020_Equinox_Pipeline\CAD\Pipeline\Drawings\Typicals\EQUINOX-TYPICALS.dwg
Plot Date: Tuesday, June 9, 2026 6:54:08 AM Plotted By: Jeff Schilz
Monochrome.ctb

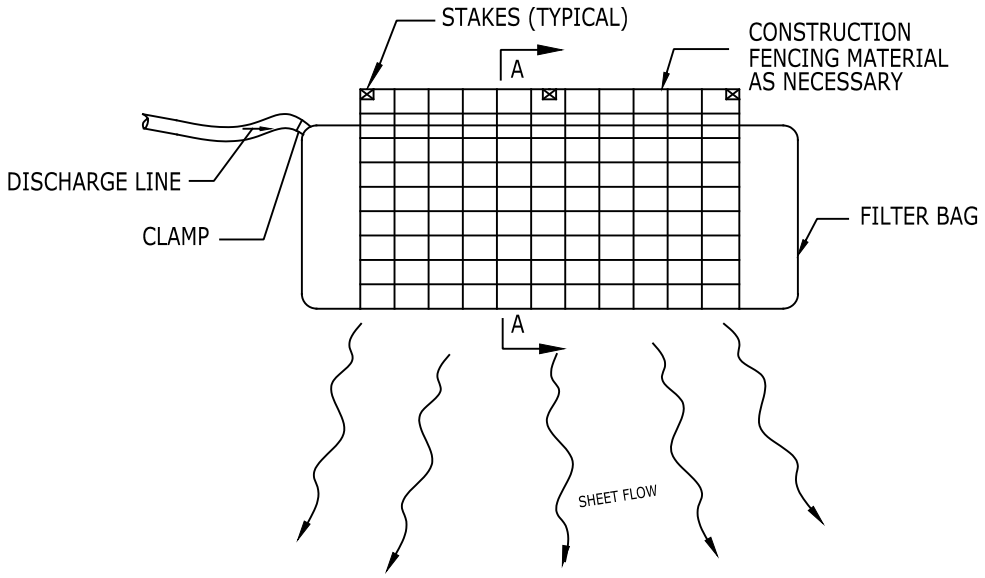

PLAN

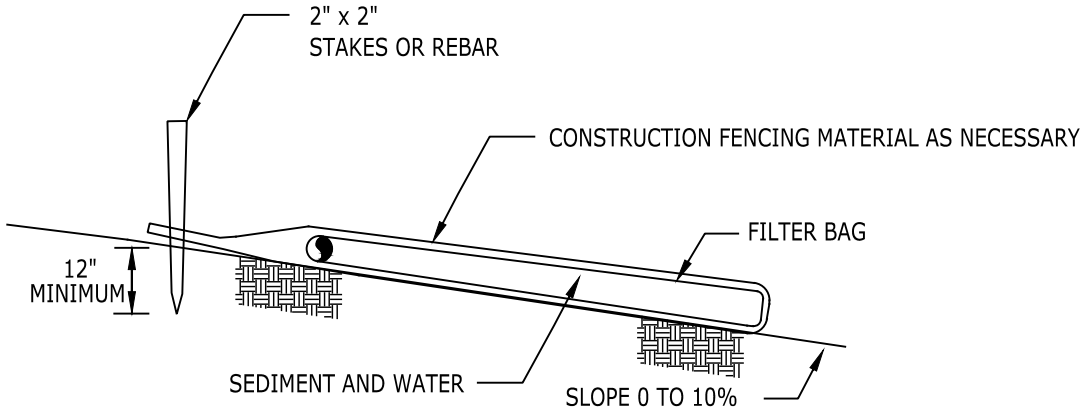

SECTION "A-A"

NOTES:

1. INSTALL A DEWATERING GEOTEXTILE FILTER BAG(S) AS NECESSARY TO PREVENT THE FLOW OF HEAVILY SILT LADEN WATER INTO WATERBODIES OR WETLANDS.
2. DISCHARGE SITE SHALL BE WELL VEGETATED AND THE TOPOGRAPHY OF THE SITE SUCH THAT WATER WILL FLOW AWAY FROM ANY WORK AREAS. THE AREA DOWN SLOPE FROM THE DEWATERING SITE MUST BE REASONABLY PLANE OR STABILIZED BY VEGETATION OR OTHER MEANS TO ALLOW THE FILTERED WATER TO CONTINUE AS SHEET FLOW.
3. ATTACH A DISCHARGE HOSE IN A MANNER TO CONTROL SEDIMENT, FLOW AND POINT OF DISCHARGE.
4. DISCHARGE RATE SHALL NOT EXCEED FILTER BAG SIZE.
5. REPLACE FILTER BAG BEFORE IT IS COMPLETELY FILLED WITH SEDIMENT. MONITOR DISCHARGE TO AVOID OVER PRESSURING DUE TO PLUGGING, WHICH MAY RESULT IN RUPTURE.
6. DISPOSE OF USED FILTER BAG AND SEDIMENT AT A SITE APPROVED BY THE COMPANY'S REPRESENTATIVE.

REV	REVISION DESCRIPTION	DATE	BY	CHK	APP
A	ISSUED FOR PERMITTING	--/--/--	PGH	SMH	BWY

This document is copyrighted and is an instrument of service by Samuel Engineering (SE). It was prepared solely for the Owner's/Client's use on this project only. Use, copy or disclosure of any information shown, in whole or in part, without SE's consent, is strictly prohibited, is a copyright breach and may be prosecuted. Any unauthorized reuse shall be at the sole risk of the user.

SAMUEL ENGINEERING
WE PROVIDE SOLUTIONS
8450 E. Crescent Parkway, Suite 200
Greenwood Village, CO 80111
Phone: 303.714.4840
Fax: 303.714.4800
Web: samuelengineering.com

PIPELINE TYPICAL
GEOTEXTILE FILTER BAG FOR DEWATERING

DRAWING NUMBER
BMP-TYP-014
REV A

CAD File: S:\Projects\25020_Equinox_Pipeline\CAD\Pipeline\Drawings\Typicals\EQUINOX-TYPICALS.dwg
Plot Date: Tuesday, June 9, 2026 6:54:13 AM Plotted By: Jeff Schilz
Monochrome.ctb

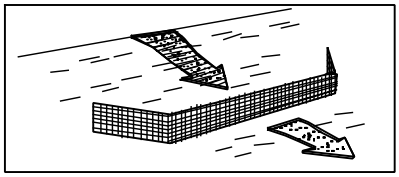

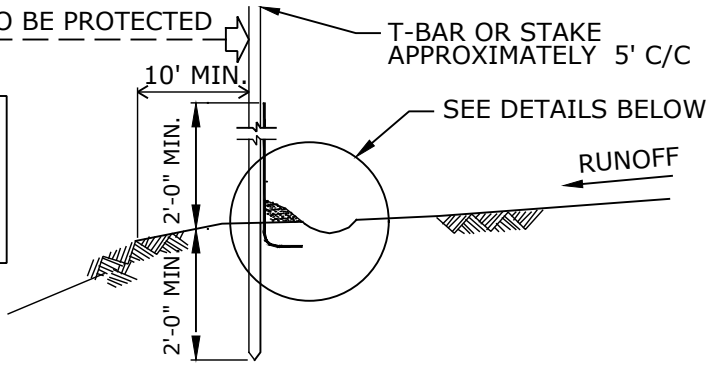

SIDE VIEW OF SILT FENCE

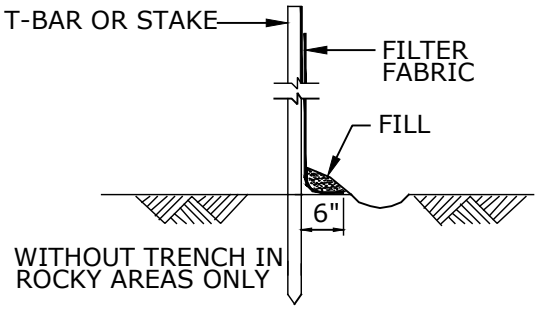

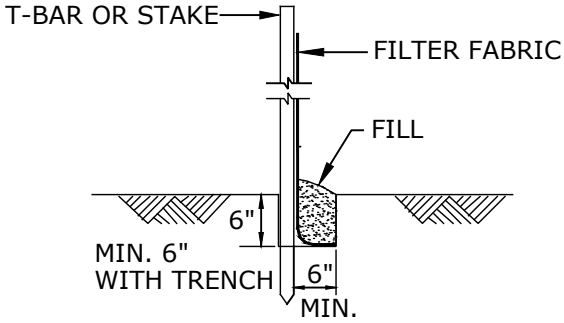

NOTES:

1. GENERALLY WHEN A LONG SEDIMENT BARRIER IS REQUIRED, SILT FENCE WILL BE UTILIZED RATHER THAN STRAW BALES AT:
   * THE BASE OF ALL SLOPES ABOVE ROADS, SPRINGS, WELTANDS, IMPOUNDMENTS AND PERENNIAL AND INTERMITTENT STREAMS.
   * THE DOWN SLOPE RIGHT-OF-WAY EDGE WHERE ANY OF THE ABOVE MENTIONED LOCATIONS ARE ADJACENT TO THE RIGHT-OF-WAY.
   * BETWEEN TOPSOIL/SPOIL STOCKPILES AND PERENNIAL OR INTERMITTENT STREAMS OR WETLANDS WHERE BUFFER ZONE REQUIREMENTS CANNOT BE MET.
   * ALONG R.O.W. BOUNDARIES OF WETLAND CONSTRUCTION.
   * ACROSS CONSTRUCTION R.O.W. AT ALL WATERBODY CROSSINGS.
   * AS SPECIFIED IN THE SPILL PREVENTION, CONTAINMENT AND COUNTERMEASURE PLAN OR OTHER PROJECT DOCUMENTS.
   * AS DIRECTED BY THE COMPANY REPRESENTATIVE.
2. THE SILT FENCE SHALL BE CONSTRUCTED AS FOLLOWS: FABRIC USED FOR THE SILT FENCE SHALL BE A "STANDARD STRENGTH" GEOTEXTILE, SUCH AS MIRAFI 100X OR AN APPROVED EQUIVALENT. THE FABRIC SHALL BE CUT FROM A CONTINUOUS FABRIC ROLL. THE HEIGHT OF THE FENCE SHALL NOT EXCEED 36". SPLICES SHALL ONLY BE DONE AT POSTS AND SHALL CONSIST OF A MINIMUM OF 6" OF OVERLAP WITH BOTH ENDS SECURED TO THE POST. POSTS SHALL BE POSITIONED A MAXIMUM OF 5' APART. POSTS SHALL CONSIST OF 2"X2" WOODEN STAKES OF SUFFICIENT LENGTH TO EXTEND A MINIMUM OF 24" INTO THE GROUND. FABRIC SHALL BE STAPLED OR WIRED TO THE POSTS A MAXIMUM OF EVERY 9".
3. THE SILT FENCE SHALL BE INSTALLED AS SPECIFIED BY THE MANUFACTURER OR AS FOLLOWS:
   * A TRENCH, 6" WIDE AND 6" DEEP, SHALL BE EXCAVATED ALONG THE CONTOUR THE POST SHALL BE DRIVEN INTO THE BOTTOM OF THE TRENCH ON THE DOWNSTREAM SIDE OF THE FILTER FABRIC. THE TRENCH SHALL BE BACK FILLED AND COMPACTED, ENSURING 6" OF FENCE IS BURIED WITHIN THE TRENCH.
   * IN AREAS WHERE THE TERRAIN IS TOO ROCKY FOR TRENCHING, A 6" GROUND FLAP WITH ROCK FILL TO HOLD IT IN PLACE SHALL BE USED.

REV	REVISION DESCRIPTION	DATE	BY	CHK	APP
A	ISSUED FOR PERMITTING	--/--/--	PGH	SMH	BWY

This document is copyrighted and is an instrument of service by Samuel Engineering (SE). It was prepared solely for the Owner's/Client's use on this project only. Use, copy or disclosure of any information shown, in whole or in part, without SE's consent, is strictly prohibited, is a copyright breach and may be prosecuted. Any unauthorized reuse shall be at the sole risk of the user.

SAMUEL ENGINEERING
WE PROVIDE SOLUTIONS
8450 E. Crescent Parkway, Suite 200
Greenwood Village, CO 80111
Phone: 303.714.4840
Fax: 303.714.4800
Web: samuelengineering.com

PIPELINE TYPICAL
SILT FENCE SEDIMENT BARRIER
(SHT. 1 OF 3)

DRAWING NUMBER
BMP-TYP-015
REV A

CAD File: S:\Projects\25020_Equinox_Pipeline\CAD\Pipeline\Drawings\Typicals\EQUINOX-TYPICALS.dwg
Plot Date: Tuesday, June 9, 2026 6:54:18 AM Plotted By: Jeff Schilz
Monochrome.ctb

NOTES CONTINUED:

* SILT FENCES PLACED AT THE TOE OF A SLOPE SHALL BE SET AT LEAST 6' DOWN GRADIENT FROM THE TOE OF THE SLOPE (WHERE POSSIBLE) IN ORDER TO INCREASE PONDING.
* SILT FENCE PLACED AT THE TOP OF SLOPES SHALL BE AT LEAST 10' BELOW THE CREST.
* SILT FENCES PLACED AT THE BASE OF SPOIL OR TOPSOIL STOCKPILES SHALL EXTEND AROUND THE BASE OF THE PILES IN ORDER TO CONTAIN ANY SEDIMENTS AND/OR PREVENT FLOW-AROUND.
* WHEN INSTALLING SILT FENCES IN DRAINAGES, EXTEND THE FENCE UP THE CHANNEL BANKS AND TURN BOTH ENDS AT A SLIGHT ANGLE TOWARDS THE CENTER OF THE RIGHT-OF-WAY.
* UPON THE REQUEST OF THE COMPANY REPRESENTATIVE, STRAW BALES SHALL BE USED IN CONJUNCTION WITH THE SILT FENCE.

4. SILT FENCES SHALL BE CHECKED AND MAINTAINED ON A REGULAR BASIS. THE DEPTH OF THE ANCHOR TRENCH SHALL BE ADJUSTED IF UNDERMINED. SHOULD INSPECTION REVEAL SEDIMENT LOADING AT OR NEAR 40% CAPACITY, THE SEDIMENT SHALL BE REMOVED AND PLACED IN AN AREA WHERE IT SHALL NOT RE-ENTER THE SILT FENCE IMPOUNDMENT OR A WATERWAY.
5. SILT FENCE SHALL BE REMOVED ONLY AS DIRECTED BY THE COMPANY REPRESENTATIVE.
6. EROSION CONTROL STRUCTURES SHALL BE INSPECTED DAILY IN AREAS OF ACTIVE CONSTRUCTION. STRUCTURES SHALL BE INSPECTED WEEKLY AT INACTIVE CONSTRUCTION AREAS AND WITHIN 24 HOURS OF EACH RAINFALL EVENT WITH 0.5 INCH OR MORE. STRUCTURES SHALL BE REPAIRED AS NECESSARY.

INSTALLATIONS AT VEHICLE CROSSINGS OF WATERBODIES AND WETLANDS

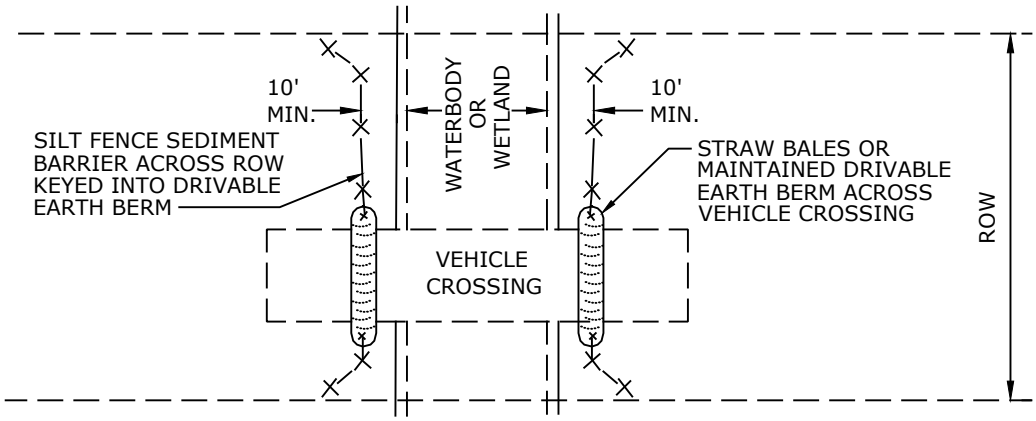

PLAN

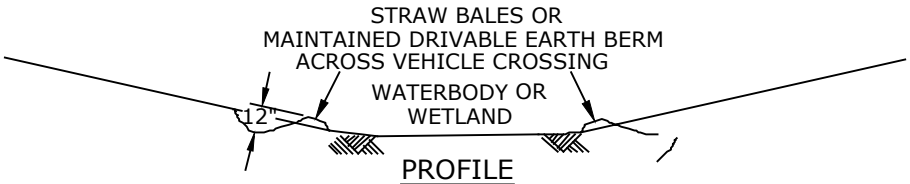

PROFILE

NOTES:

1. IF REQUIRED, A 15' GAP SHALL BE LEFT IN THE SILT FENCE TO ACCOMMODATE TRAFFIC. HOWEVER, A SECTION OF SILT FENCE OR A DRIVABLE EARTH BERM TIED INTO ADJACENT SILT FENCE SHALL BE USED TO CLOSE THE GAP AT THE END OF EACH DAY. THE SILT FENCE USED TO CLOSE THE GAP MUST OVERLAP THE ENDS OF THE PERMANENT SILT FENCE FOR A MINIMUM OF 24", AND SHALL BE "KEYED" INTO THE GROUND THE SAME AS THE FILTER FABRIC ON EITHER SIDE OF THE GAP.
2. A MAINTAINED DRIVABLE EARTH BERM MAY BE INSTALLED ACROSS THE VEHICLE CROSSING IN LIEU OF SILT FENCE DURING ACTIVE CONSTRUCTION.
3. BERM MUST BE TIED INTO SILT FENCE.
4. BERM MUST BE MAINTAINED TO ENSURE SEDIMENT TRAPPING CAPACITY.
5. WHEN ACTIVE CONSTRUCTION IS COMPLETE, INSTALL SILT FENCE ACROSS ENTIRE R.O.W.

REV	REVISION DESCRIPTION	DATE	BY	CHK	APP
A	ISSUED FOR PERMITTING	--/--/--	PGH	SMH	BWY

This document is copyrighted and is an instrument of service by Samuel Engineering (SE). It was prepared solely for the Owner's/Client's use on this project only. Use, copy or disclosure of any information shown, in whole or in part, without SE's consent, is strictly prohibited, is a copyright breach and may be prosecuted. Any unauthorized reuse shall be at the sole risk of the user.

SAMUEL ENGINEERING
WE PROVIDE SOLUTIONS
8450 E. Crescent Parkway, Suite 200
Greenwood Village, CO 80111
Phone: 303.714.4840
Fax: 303.714.4800
Web: samuelengineering.com

PIPELINE TYPICAL
SILT FENCE SEDIMENT BARRIER
(SHT. 2 OF 3)

DRAWING NUMBER
BMP-TYP-016
REV A

CAD File: S:\Projects\25020_Equinox_Pipeline\CAD\Pipeline\Drawings\Typicals\EQUINOX-TYPICALS.dwg
Plot Date: Tuesday, June 9, 2026 6:54:23 AM Plotted By: Jeff Schilz
Monochrome.ctb

SLOPE PROTECTION

THE MAXIMUM SIZE OF THE DRAINAGE AREA SHOULD BE 0.25 ACRES PER 100 FEET OF FENCE LENGTH. SEE TABLE FOR INFORMATION ON SLOPE LENGTH BEHIND THE FENCE.

MAXIMUM SLOPE LENGTH ABOVE A 24" TO 30" HIGH SILT FENCE

SLOPE	LENGTH (FT)
<2%	500
2 TO 5%	200
5 TO 10%	150
10 TO 20%	100
20 TO 30%	70
30 TO 40%	40
40 TO 50%	25

REV	REVISION DESCRIPTION	DATE	BY	CHK	APP
A	ISSUED FOR PERMITTING	--/--/--	PGH	SMH	BWY

This document is copyrighted and is an instrument of service by Samuel Engineering (SE). It was prepared solely for the Owner's/Client's use on this project only. Use, copy or disclosure of any information shown, in whole or in part, without SE's consent, is strictly prohibited, is a copyright breach and may be prosecuted. Any unauthorized reuse shall be at the sole risk of the user.

SAMUEL ENGINEERING
WE PROVIDE SOLUTIONS
8450 E. Crescent Parkway, Suite 200
Greenwood Village, CO 80111
Phone: 303.714.4840
Fax: 303.714.4800
Web: samuelengineering.com

PIPELINE TYPICAL
SILT FENCE SEDIMENT BARRIER
(SHT. 3 OF 3)

DRAWING NUMBER
BMP-TYP-017
REV A

CAD File: S:\Projects\25020_Equinox_Pipeline\CAD\Pipeline\Drawings\Typicals\EQUINOX-TYPICALS.dwg
Plot Date: Tuesday, June 9, 2026 6:54:28 AM Plotted By: Jeff Schilz
Monochrome.ctb

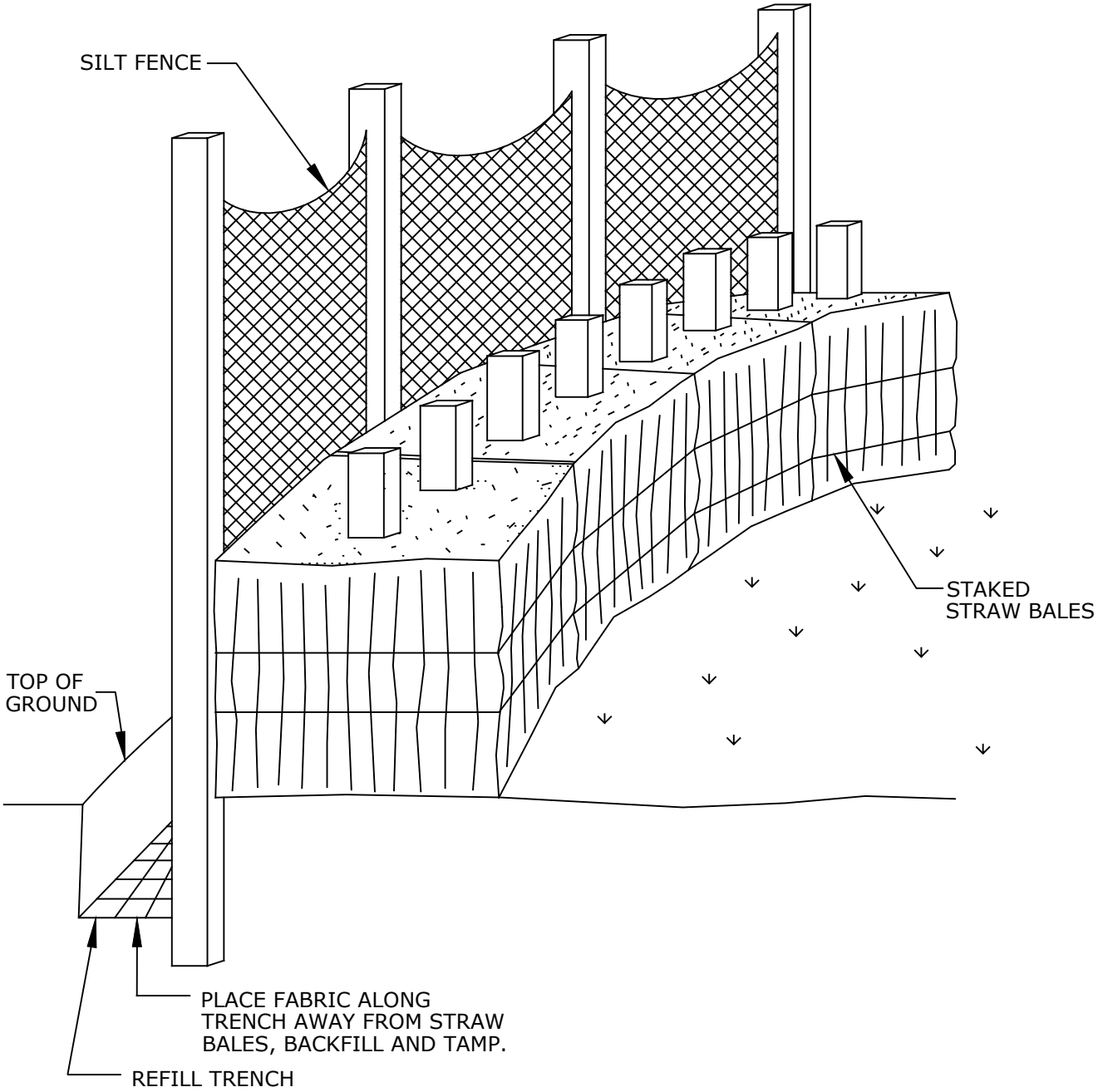

NOTE:

1. WHERE EXTREMELY ERODIBLE SOIL CONDITIONS EXIST, AT THE DIRECTION OF THE COMPANY'S REPRESENTATIVE A COMBINED STRAW BALE AND SILT FENCE SEDIMENT CONTROL BARRIER SHALL BE INSTALLED. FOR INSTALLATION CONDITIONS AND INSTRUCTIONS SEE:
   - SEE BMP-TYP-015 THROUGH BMP-TYP-017 FOR SILT FENCE SEDIMENT BARRIERS
   - SEE BMP-TYP-019 & BMP-TYP-020 FOR STRAW BALE SEDIMENT BARRIERS

REV	REVISION DESCRIPTION	DATE	BY	CHK	APP
A	ISSUED FOR PERMITTING	--/--/--	PGH	SMH	BWY

This document is copyrighted and is an instrument of service by Samuel Engineering (SE). It was prepared solely for the Owner's/Client's use on this project only. Use, copy or disclosure of any information shown, in whole or in part, without SE's consent, is strictly prohibited, is a copyright breach and may be prosecuted. Any unauthorized reuse shall be at the sole risk of the user.

SAMUEL ENGINEERING
WE PROVIDE SOLUTIONS
8450 E. Crescent Parkway, Suite 200
Greenwood Village, CO 80111
Phone: 303.714.4840
Fax: 303.714.4800
Web: samuelengineering.com

PIPELINE TYPICAL
STRAW BALE & SILT FENCE

DRAWING NUMBER
BMP-TYP-018
REV A

CAD File: S:\Projects\25020_Equinox_Pipeline\CAD\Pipeline\Drawings\Typicals\EQUINOX-TYPICALS.dwg
Plot Date: Tuesday, June 9, 2026 6:54:33 AM Plotted By: Jeff Schilz
Monochrome.ctb

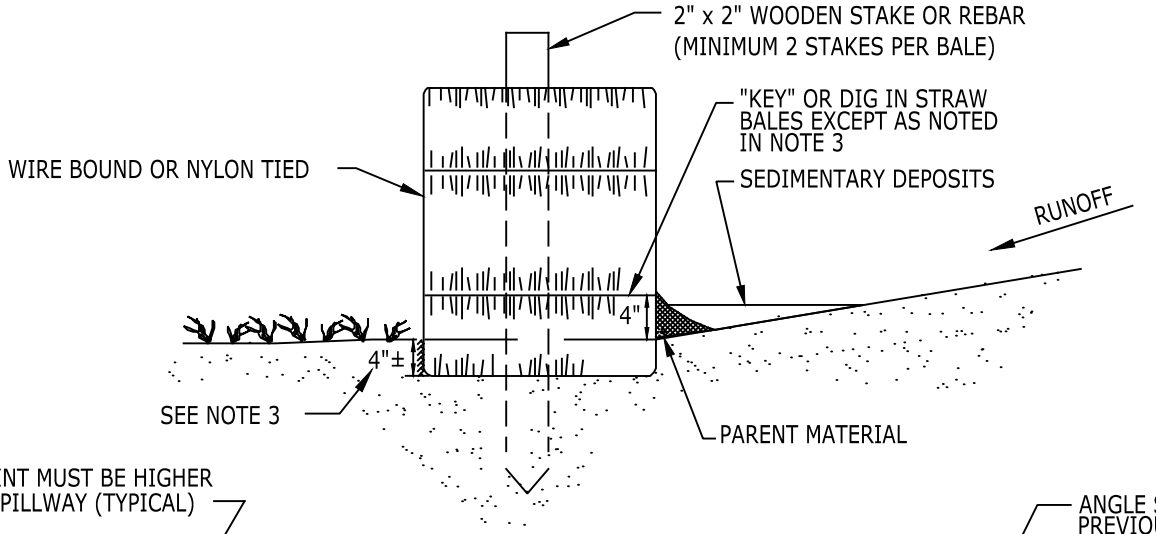

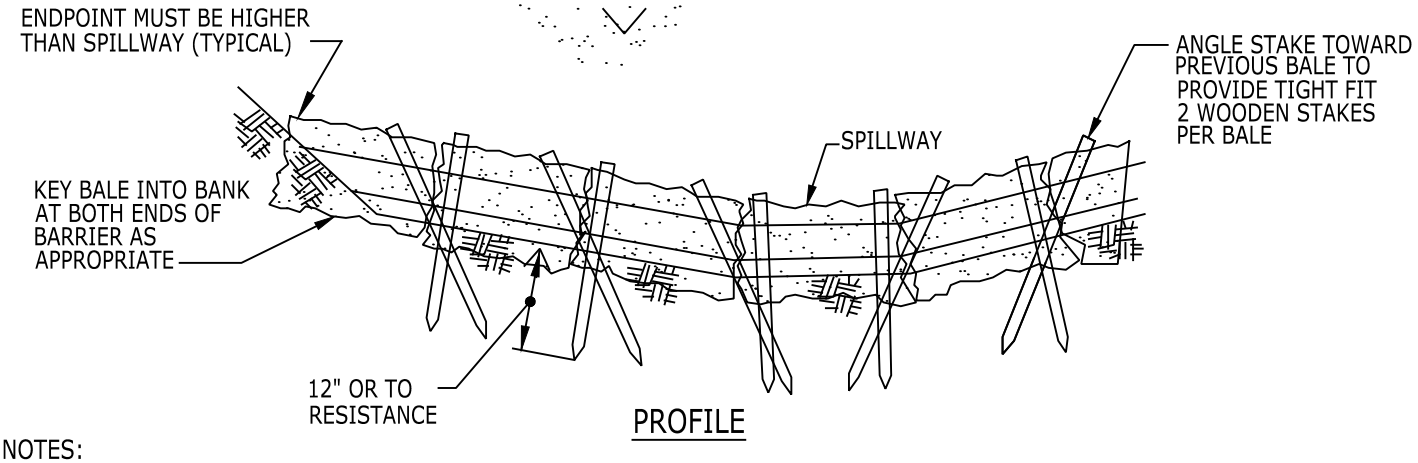

PROFILE

NOTES:

1. STRAW BALE SEDIMENT BARRIERS SHALL BE INSTALLED AT THE FOLLOWING LOCATIONS:
   - THE BASE OF ALL SLOPES ABOVE ROADS, SPRINGS, WETLANDS, IMPOUNDMENTS AND FLOWING STREAMS.
   - THE DOWNSLOPE RIGHT-OF-WAY EDGE WHERE ANY OF THE ABOVE-MENTIONED LOCATIONS ARE ADJACENT TO THE RIGHT-OF-WAY.
   - BETWEEN TOPSOIL/SPOIL STOCKPILES AND STREAMS OR WETLANDS AS NEEDED.
   - ALONG R.O.W. BOUNDARIES IN WETLAND CONSTRUCTION.
   - AS SPECIFIED IN THE SPILL PREVENTION, CONTAINMENT, AND COUNTERMEASURE PLAN.
   - AS DIRECTED BY THE COMPANY'S REPRESENTATIVE.
2. STRAW BALE SEDIMENT BARRIERS SHALL CONSIST OF A ROW OF STRAW BALES, PLACED ON THE FIBER-CUT EDGE (TIES NOT IN CONTACT WITH THE GROUND). BALES SHALL BE TIGHTLY ABUTTED TO ONE ANOTHER. THE BARRIER SHALL BE ONE BALE HIGH. ONLY CERTIFIED "NOXIOUS WEED-FREE" STRAW SHALL BE USED WHENEVER POSSIBLE.
3. ENTRENCH ("KEY") STRAW BALES INTO THE GROUND TO A DEPTH OF 4" EXCEPT IN FROZEN, SATURATED, OR EXTREMELY ROCKY SOILS. PLACE PARENT MATERIAL ON UPSTREAM SIDE OF STRAW BALES TO PREVENT UNDERMINING.
4. WALK ON STRAW BALES OR OTHER METHOD TO ENSURE ADEQUATE BALE-TO-SOIL CONTACT.
5. ANCHOR STRAW BALES SECURELY IN PLACE WITH TWO WOODEN OR STEEL REBAR STAKES DRIVEN THROUGH THE TOPS OF THE BALES. THE STAKES SHALL PENETRATE THE GROUND A DISTANCE OF 12" UNLESS ROCK OR AN IMPERMEABLE LAYER IS ENCOUNTERED:
   - THE FIRST, CENTER AND END BALES OF THE BARRIER SHALL HAVE STAKES DRIVEN VERTICALLY THROUGH THE BALE.
   - BALES, OTHER THAN THOSE LOCATED AT THE ENDS OR CENTER OF THE BARRIER, SHALL HAVE THE FIRST STAKE DRIVEN THROUGH THE TOP OF THE BALE AT AN ANGLE SO THAT THE STAKE PASSES THROUGH THE PREVIOUSLY PLACED BALE, IN ORDER TO PROVIDE TIGHT CONTACT BETWEEN BALES. THE SECOND STAKE SHALL BE DRIVEN VERTICALLY THROUGH THE TOP OF THE BALE.

REV	REVISION DESCRIPTION	DATE	BY	CHK	APP
A	ISSUED FOR PERMITTING	--/--/--	PGH	SMH	BWY

This document is copyrighted and is an instrument of service by Samuel Engineering (SE). It was prepared solely for the Owner's/Client's use on this project only. Use, copy or disclosure of any information shown, in whole or in part, without SE's consent, is strictly prohibited, is a copyright breach and may be prosecuted. Any unauthorized reuse shall be at the sole risk of the user.

SAMUEL ENGINEERING
WE PROVIDE SOLUTIONS
8450 E. Crescent Parkway, Suite 200
Greenwood Village, CO 80111
Phone: 303.714.4840
Fax: 303.714.4800
Web: samuelengineering.com

PIPELINE TYPICAL
STRAW BALE SEDIMENT BARRIER
(SHT. 1 OF 2)

DRAWING NUMBER
BMP-TYP-019
REV A

CAD File: S:\Projects\25020_Equinox_Pipeline\CAD\Pipeline\Drawings\Typicals\EQUINOX-TYPICALS.dwg
Plot Date: Tuesday, June 9, 2026 6:54:39 AM Plotted By: Jeff Schilz
Monochrome.ctb

NOTES:

6. PLACE STRAW BALES SO THEY ARE EFFECTIVE BUT DO NOT HINDER CONSTRUCTION. IF NECESSARY A 15' GAP IN STRAW BALE BARRIERS SHALL BE PROVIDED AS NEEDED TO ACCOMMODATE TRAFFIC ON TEMPORARY CONSTRUCTION ROADS. THE GAP SHALL BE CLOSED AT THE END OF EACH WORK DAY, USING STRAW BALE BARRIERS, OR A DRIVABLE EARTH BERM TIED INTO ADJACENT STRAW BALES. THE BALES USED TO CLOSE THE GAP SHALL BE PLACED ON THE UPHILL SIDE OF THE STRAW BALE BARRIER, THE END BALES OF THE GAP SEGMENT SHALL OVERLAP A MINIMUM OF 12".
7. MONITOR FOR UNDERMINING OR FLOW-AROUND. INSPECT BALE POSITION TO ASSURE THAT THEY REMAIN CLOSE TOGETHER. MAINTAIN STRAW BALE BARRIERS BY REPLACING DAMAGED BALES AND REMOVING SEDIMENT LOAD. WHEN SEDIMENT LOAD IS GREATER THAN 60% BEHIND THE BARRIER, SEDIMENT SHALL BE REMOVED AND PLACED IN AN AREA WHERE IT SHALL NOT REENTER THE BARRIER OR A WATERWAY. IF SEDIMENT BEHIND STRAW BALE BARRIERS CANNOT BE REMOVED, A SECOND ROW OF BALES SHALL BE INSTALLED UPSLOPE OF THE BARRIER.
8. WHERE STRAW BALES AND SILT FENCE ARE INSTALLED AS A UNIT, THE STRAW BALES SHALL BE INSTALLED ON THE DOWN SLOPE SIDE OF THE SILT FENCE.
9. EROSION CONTROL STRUCTURES SHALL BE INSPECTED DAILY IN AREAS OF ACTIVE CONSTRUCTION. STRUCTURES SHALL BE INSPECTED WEEKLY AT INACTIVE CONSTRUCTION AREAS AND WITHIN 24 HOURS OF EACH 0.5 INCH RAINFALL EVENT. STRUCTURES SHALL BE REPAIRED AS NECESSARY.
10. STRAW BALE BARRIERS SHALL BE REMOVED ONLY AS DIRECTED BY THE COMPANY'S REPRESENTATIVE.

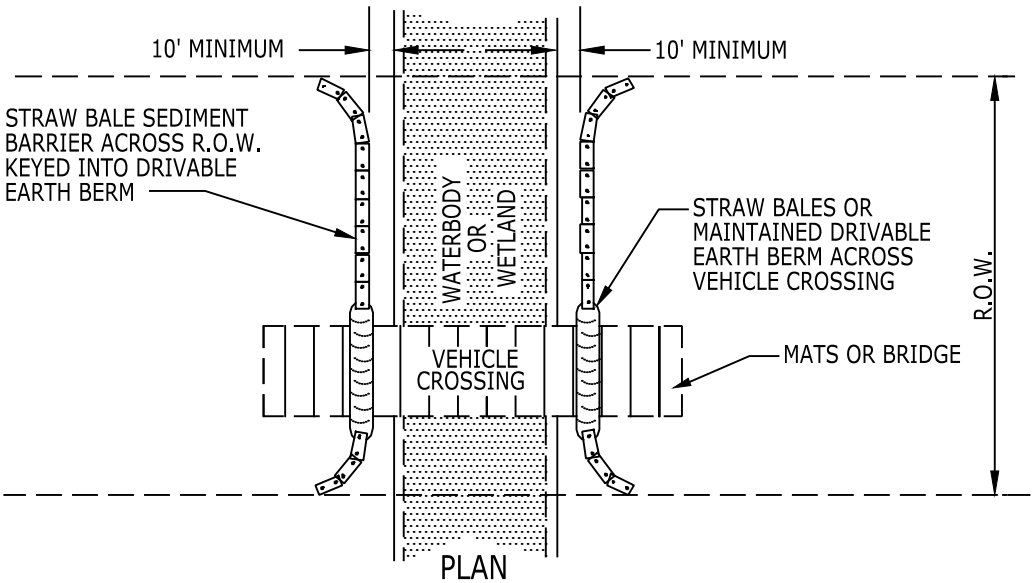

PLAN

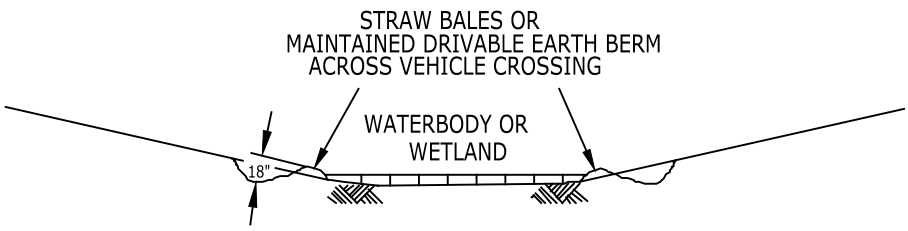

PROFILE

DRIVABLE BERM NOTES:

1. A MAINTAINED DRIVABLE EARTH BERM MAY BE INSTALLED ACROSS VEHICLE CROSSINGS IN LIEU OF STRAW BALES.
2. BERM MUST BE TIED INTO STRAW BALES.
3. BERM MUST BE MAINTAINED TO ENSURE SEDIMENT TRAPPING CAPACITY.
4. COMPLETED WETLAND CROSSING SEDIMENT BARRIER STRUCTURE SHALL BE APPROVED BY THE COMPANY REPRESENTATIVE PRIOR TO CROSSING USE.

REV	REVISION DESCRIPTION	DATE	BY	CHK	APP
A	ISSUED FOR PERMITTING	--/--/--	PGH	SMH	BWY

This document is copyrighted and is an instrument of service by Samuel Engineering (SE). It was prepared solely for the Owner's/Client's use on this project only. Use, copy or disclosure of any information shown, in whole or in part, without SE's consent, is strictly prohibited, is a copyright breach and may be prosecuted. Any unauthorized reuse shall be at the sole risk of the user.

SAMUEL ENGINEERING
WE PROVIDE SOLUTIONS
8450 E. Crescent Parkway, Suite 200
Greenwood Village, CO 80111
Phone: 303.714.4840
Fax: 303.714.4800
Web: samuelengineering.com

PIPELINE TYPICAL
STRAW BALE SEDIMENT BARRIER
(SHT. 2 OF 2)

DRAWING NUMBER
BMP-TYP-020
REV A

CAD File: S:\Projects\25020_Equinox_Pipeline\CAD\Pipeline\Drawings\Typicals\EQUINOX-TYPICALS.dwg
Plot Date: Tuesday, June 9, 2026 6:54:43 AM Plotted By: Jeff Schilz
Monochrome.ctb

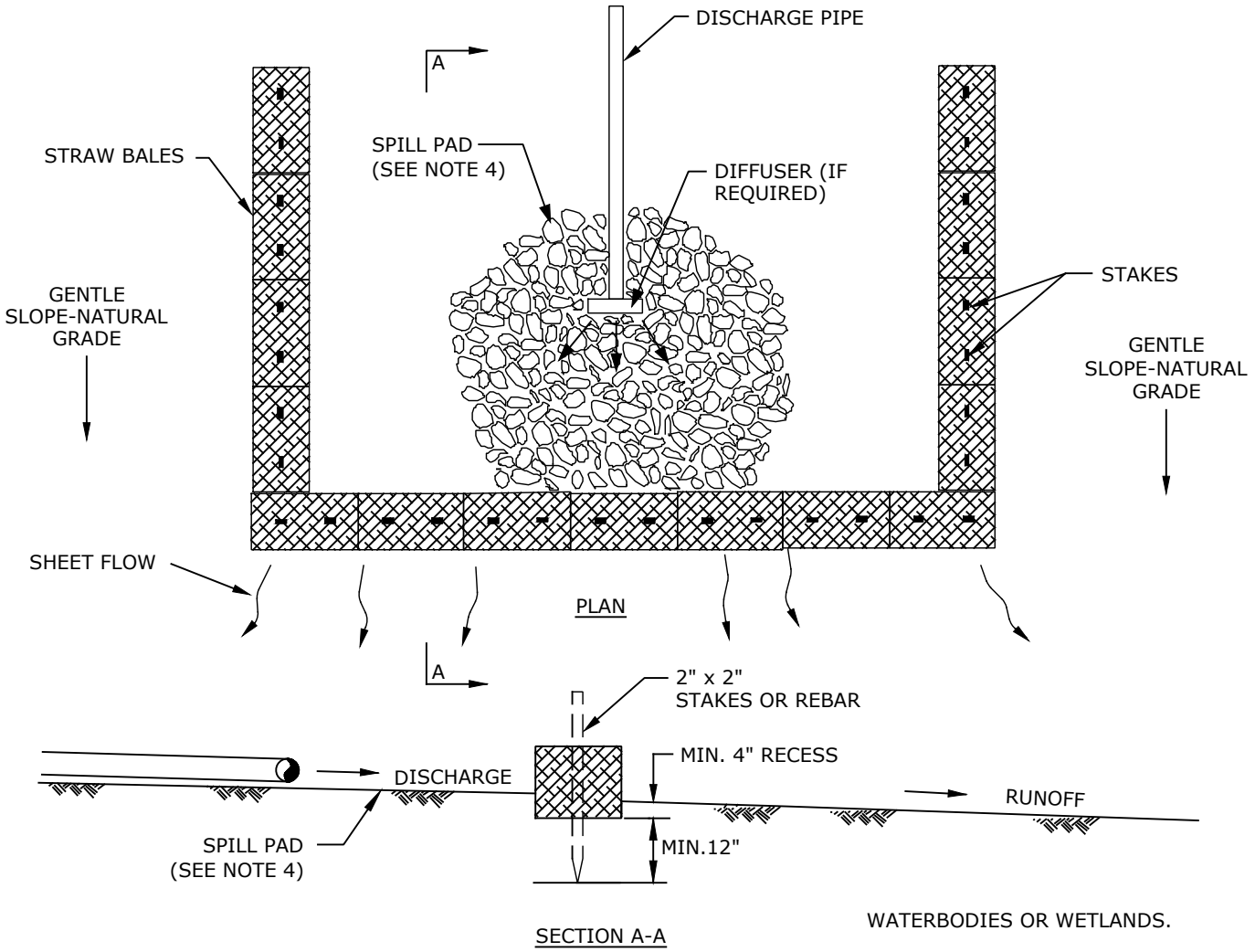

NOTES:

1. INSTALL A STRAW BALE DEWATERING STRUCTURE WHEREVER IT IS NECESSARY AND AS DIRECTED BY THE COMPANY REPRESENTATIVE TO PREVENT THE FLOW OF SILT LADEN WATER INTO WATERBODIES OR WETLANDS.

2. DISCHARGE SITE SHALL BE WELL VEGETATED AND THE TOPOGRAPHY OF THE SITE SUCH THAT WATER WILL FLOW INTO THE DEWATERING STRUCTURE AND AWAY FROM ANY WORK AREAS. THE AREA DOWN SLOPE FROM THE DEWATERING SITE MUST BE REASONABLY PLANE OR STABILIZED BY VEGETATION OR OTHER MEANS TO ALLOW THE FILTERED WATER TO CONTINUE AS SHEET FLOW.

3. ANCHOR STRAW BALES SECURELY IN PLACE WITH TWO WOODEN STAKES OR REBAR. ENTRENCH ("KEY") STRAW BALES INTO THE GROUND TO A DEPTH OF 4".

4. DIRECT THE PUMPED WATER ONTO A STABLE SPILL PAD CONSTRUCTED OF STRAW BALES, ROCK FILL, WEIGHTED TIMBERS, ROCK SHIELD OR WOVEN GEOTEXTILE STAKED TO THE GROUND SURFACE (SUCH AS MIRAFI 600X) OR AN APPROVED EQUIVALENT.

5. DISCHARGE RATES SHALL BE SUCH THAT WATER WILL NOT OVERFLOW THE TOP OF THE STRUCTURE.

6. MANUFACTURED FILTER BAGS (BMP-TYP-014) ARE A SUITABLE ALTERNATIVE TO STRAW BALE STRUCTURES FOR TRENCH DEWATERING.

7. INSTALL A SPLASH PUP (BMP-TYP-023) IF THE DISCHARGE VELOCITY IS ERODING THE SOILS.

REV	REVISION DESCRIPTION	DATE	BY	CHK	APP
A	ISSUED FOR PERMITTING	--/--/--	PGH	SMH	BWY

This document is copyrighted and is an instrument of service by Samuel Engineering (SE). It was prepared solely for the Owner's/Client's use on this project only. Use, copy or disclosure of any information shown, in whole or in part, without SE's consent, is strictly prohibited, is a copyright breach and may be prosecuted. Any unauthorized reuse shall be at the sole risk of the user.

SAMUEL ENGINEERING
WE PROVIDE SOLUTIONS
8450 E. Crescent Parkway, Suite 200
Greenwood Village, CO 80111
Phone: 303.714.4840
Fax: 303.714.4800
Web: samuelengineering.com

PIPELINE TYPICAL
STRAW BALE DEWATERING -
SMALL VOLUME (SHT 1 OF 2)

DRAWING NUMBER
BMP-TYP-021
REV A

CAD File: S:\Projects\25020_Equinox_Pipeline\CAD\Pipeline\Drawings\Typicals\EQUINOX-TYPICALS.dwg
Plot Date: Tuesday, June 9, 2026 6:54:48 AM Plotted By: Jeff Schilz
Monochrome.ctb

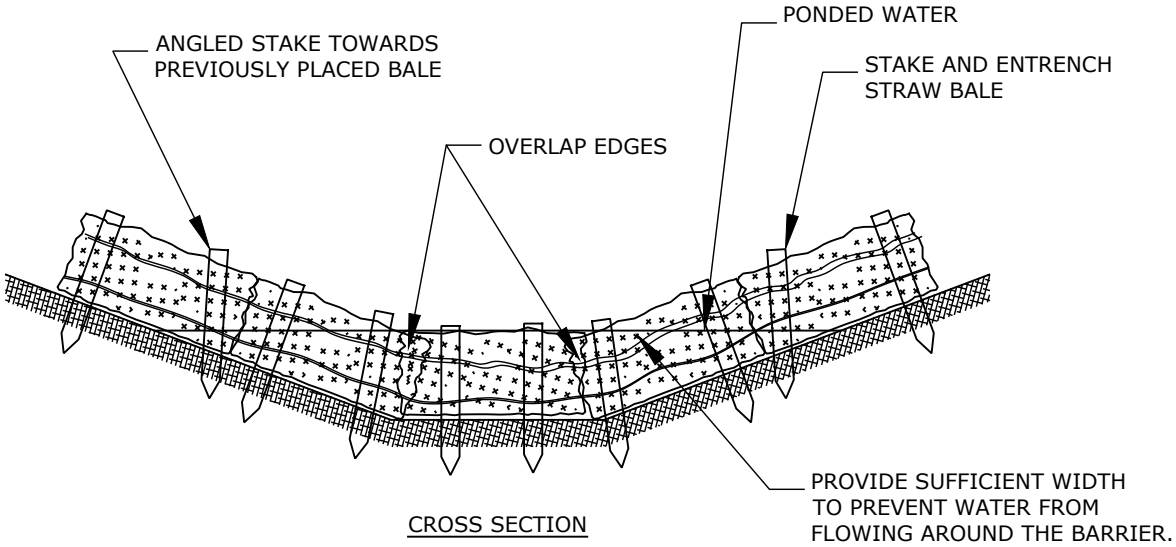

CROSS SECTION

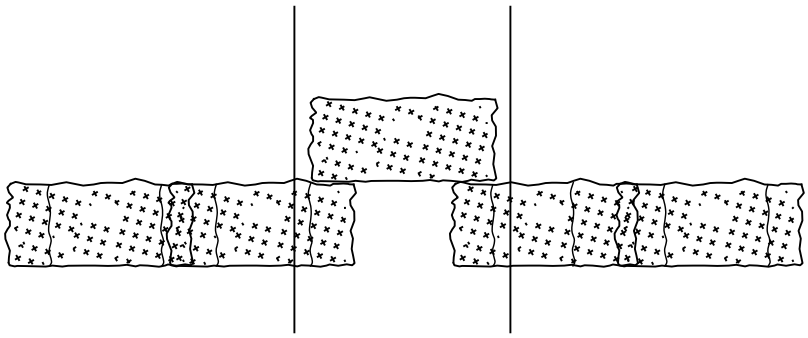

PLAN VIEW

THE MAXIMUM SIZE OF THE DRAINAGE AREA SHOULD BE 0.25 ACRES PER 100 FEET OF FENCE LENGTH.
SEE TABLE FOR MORE INFORMATION ABOUT HILLSIDE LENGTH.

SLOPE PROTECTION

MAXIMUM HILLSIDE LENGTH ALONG ROW BETWEEN SLOPE PROTECTION FOR GIVEN SLOPE

SLOPE	LENGTH (FT)
<2%	250
2 TO 5%	100
5 TO 10%	50
10 TO 20%	35
>20%	15

REV	REVISION DESCRIPTION	DATE	BY	CHK	APP
A	ISSUED FOR PERMITTING	--/--/--	PGH	SMH	BWY

This document is copyrighted and is an instrument of service by Samuel Engineering (SE). It was prepared solely for the Owner's/Client's use on this project only. Use, copy or disclosure of any information shown, in whole or in part, without SE's consent, is strictly prohibited, is a copyright breach and may be prosecuted. Any unauthorized reuse shall be at the sole risk of the user.

SAMUEL ENGINEERING
WE PROVIDE SOLUTIONS
8450 E. Crescent Parkway, Suite 200
Greenwood Village, CO 80111
Phone: 303.714.4840
Fax: 303.714.4800
Web: samuelengineering.com

PIPELINE TYPICAL
STRAW BALE DEWATERING -
SMALL VOLUME (SHT. 2 OF 2)

DRAWING NUMBER
BMP-TYP-022
REV A

CAD File: S:\Projects\25020_Equinox_Pipeline\CAD\Pipeline\Drawings\Typicals\EQUINOX-TYPICALS.dwg
Plot Date: Tuesday, June 9, 2026 6:54:53 AM Plotted By: Jeff Schilz
Monochrome.ctb

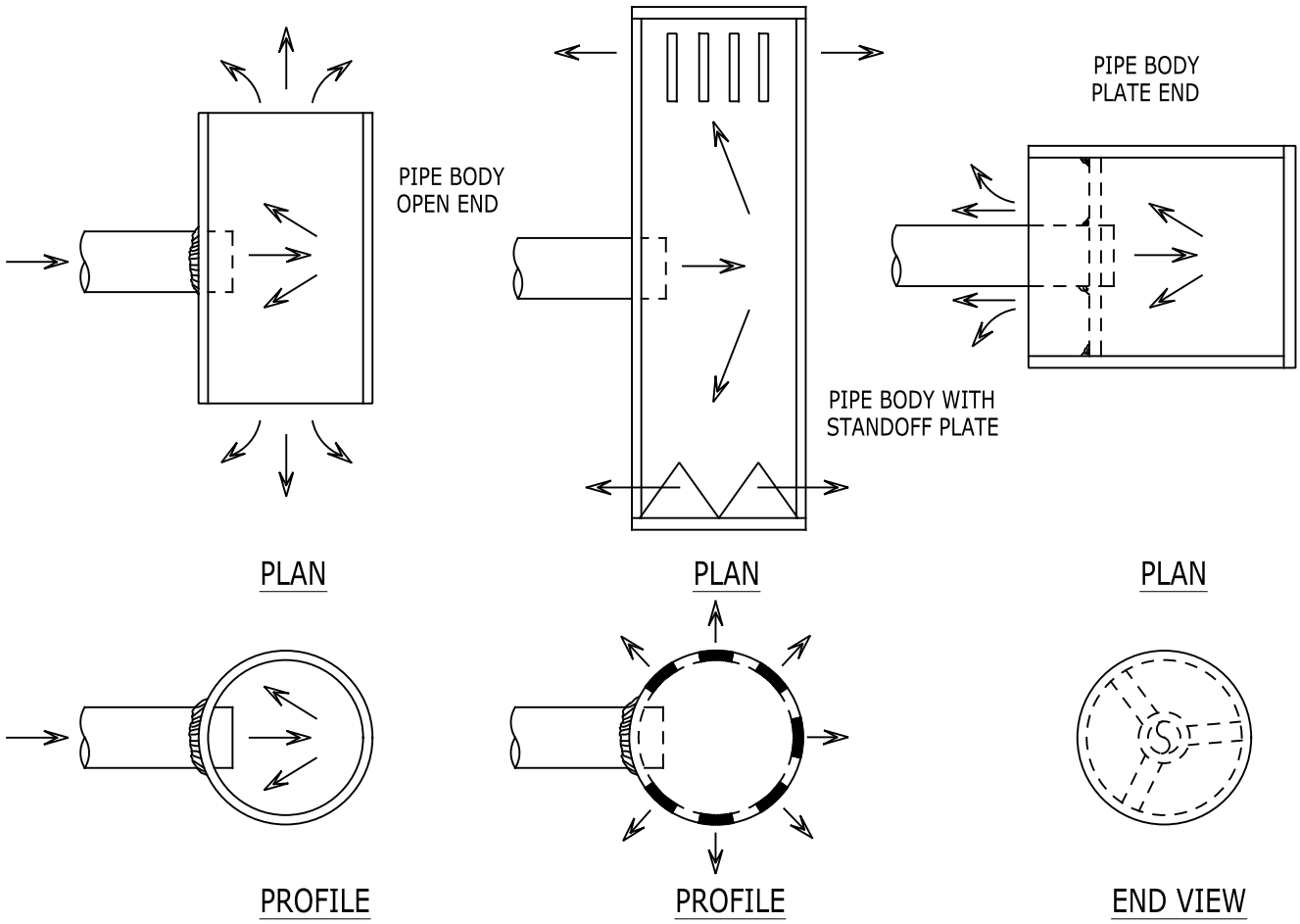

BASIC SPLASH PUP

BASIC SPLASH PLATE

PLATE COMBINATION

NOTES:

1. AN ENERGY DISSIPATER SHALL BE UTILIZED WHENEVER WATER DISCHARGE VELOCITIES MAY CAUSE EROSION.
2. THE DESIGN AND EFFECTIVENESS OF THE ENERGY DISSIPATER IS THE RESPONSIBILITY OF THE CONSTRUCTION CONTRACTOR.
3. ENERGY DISSIPATERS ARE UTILIZED IN CONJUNCTION WITH A DEWATERING STRUCTURE.
4. GEOTEX FABRIC OR EQUIV. SHALL BE PLACED UNDERNEATH AND AROUND DISAPATOR DEVICE TO MIN. EROSION.

REV	REVISION DESCRIPTION	DATE	BY	CHK	APP
A	ISSUED FOR PERMITTING	--/--/--	PGH	SMH	BWY

This document is copyrighted and is an instrument of service by Samuel Engineering (SE). It was prepared solely for the Owner's/Client's use on this project only. Use, copy or disclosure of any information shown, in whole or in part, without SE's consent, is strictly prohibited, is a copyright breach and may be prosecuted. Any unauthorized reuse shall be at the sole risk of the user.

SAMUEL ENGINEERING
WE PROVIDE SOLUTIONS
8450 E. Crescent Parkway, Suite 200
Greenwood Village, CO 80111
Phone: 303.714.4840
Fax: 303.714.4800
Web: samuelengineering.com

PIPELINE TYPICAL
SPLASH PUP FOR TEST WATER
DISCHARGE

DRAWING NUMBER
BMP-TYP-023
REV A

CAD File: S:\Projects\25020_Equinox_Pipeline\CAD\Pipeline\Drawings\Typicals\EQUINOX-TYPICALS.dwg
Plot Date: Tuesday, June 9, 2026 6:54:58 AM Plotted By: Jeff Schilz
Monochrome.ctb

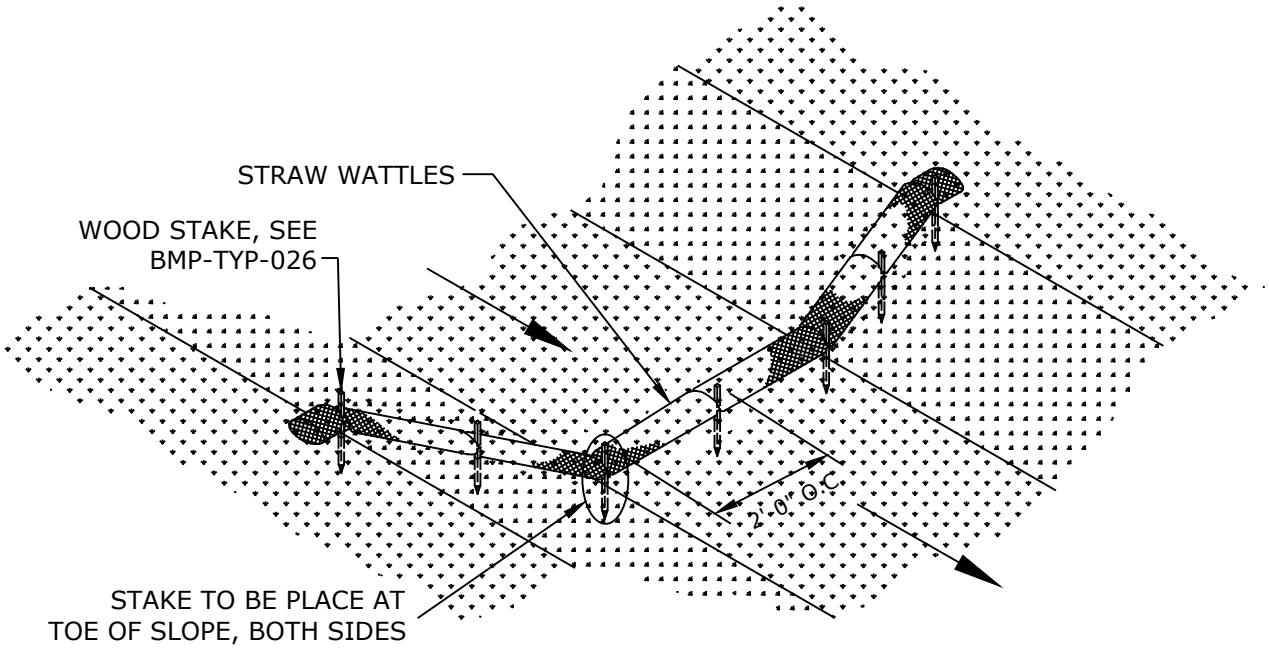

STRAW WATTLES
DETAIL (NO BLANKET)

NO SCALE

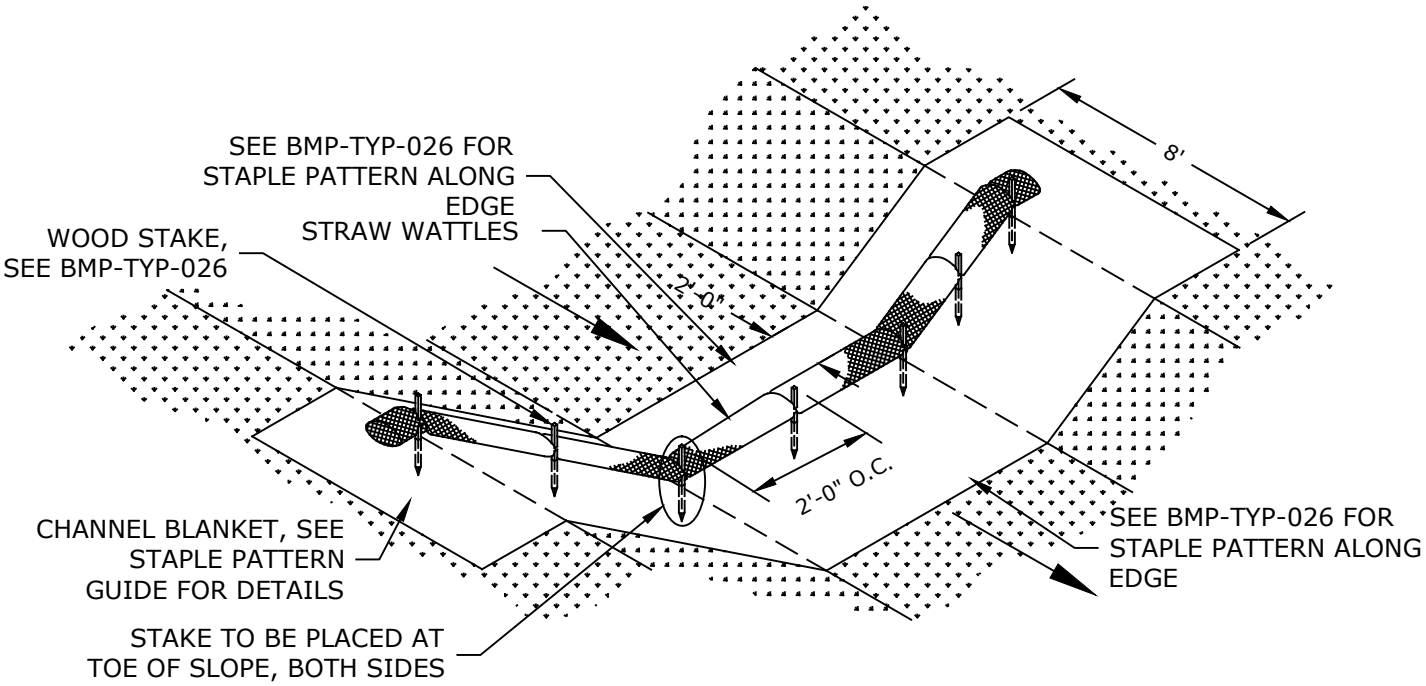

STRAW WATTLES
DETAIL (WITH BLANKET)

NO SCALE

REV	REVISION DESCRIPTION	DATE	BY	CHK	APP
A	ISSUED FOR PERMITTING	--/--/--	PGH	SMH	BWY

This document is copyrighted and is an instrument of service by Samuel Engineering (SE). It was prepared solely for the Owner's/Client's use on this project only. Use, copy or disclosure of any information shown, in whole or in part, without SE's consent, is strictly prohibited, is a copyright breach and may be prosecuted. Any unauthorized reuse shall be at the sole risk of the user.

SAMUEL ENGINEERING
WE PROVIDE SOLUTIONS
8450 E. Crescent Parkway, Suite 200
Greenwood Village, CO 80111
Phone: 303.714.4840
Fax: 303.714.4800
Web: samuelengineering.com

PIPELINE TYPICAL
STRAW WATTLES CHANNEL

DRAWING NUMBER
BMP-TYP-024
REV A

CAD File: S:\Projects\25020_Equinox_Pipeline\CAD\Pipeline\Drawings\Typicals\EQUINOX-TYPICALS.dwg
Plot Date: Tuesday, June 9, 2026 6:55:03 AM Plotted By: Jeff Schilz
Monochrome.ctb

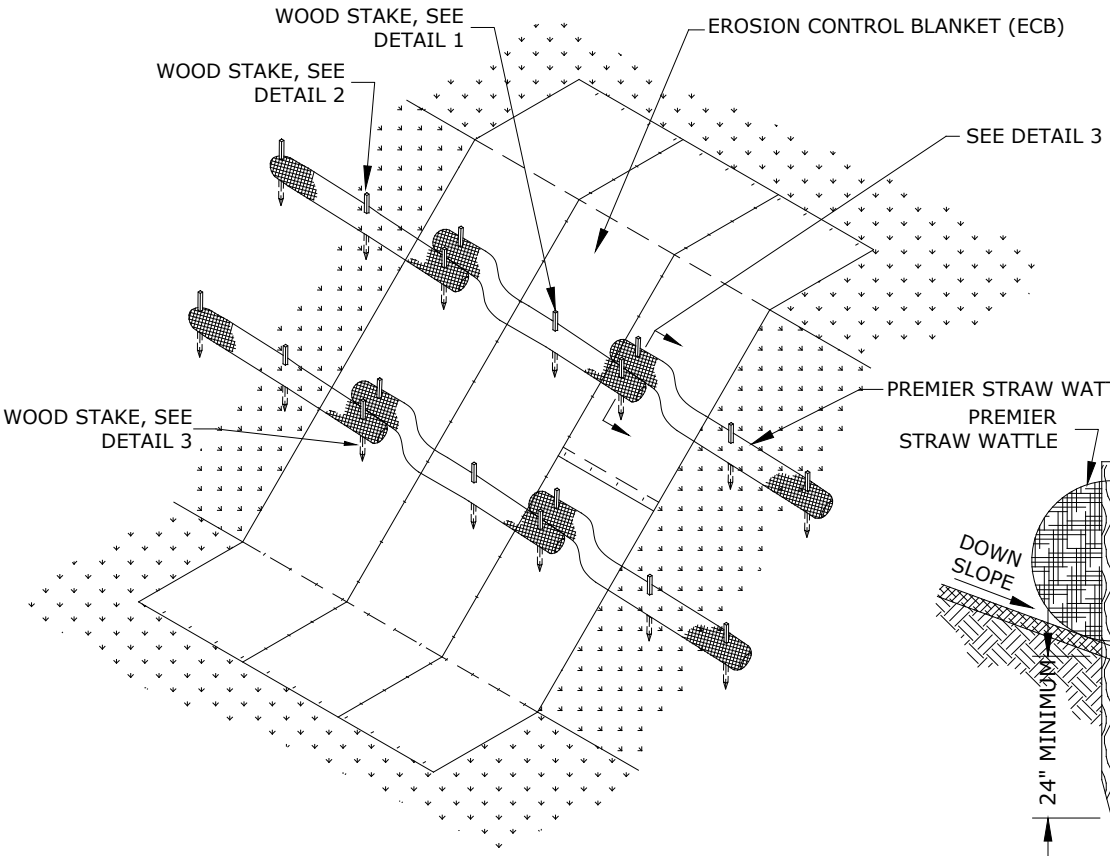

SLOPE DETAIL

NO SCALE

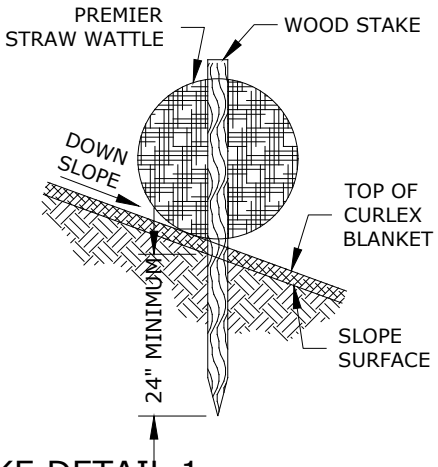

STAKE DETAIL 1 (ON TOP OF ECB)

NO SCALE

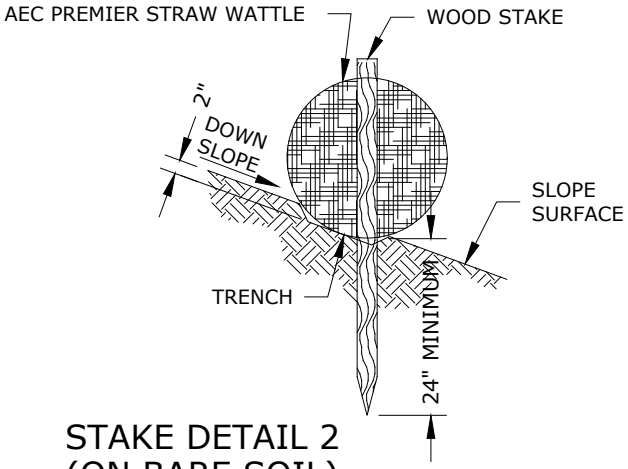

STAKE DETAIL 2 (ON BARE SOIL)

NO SCALE

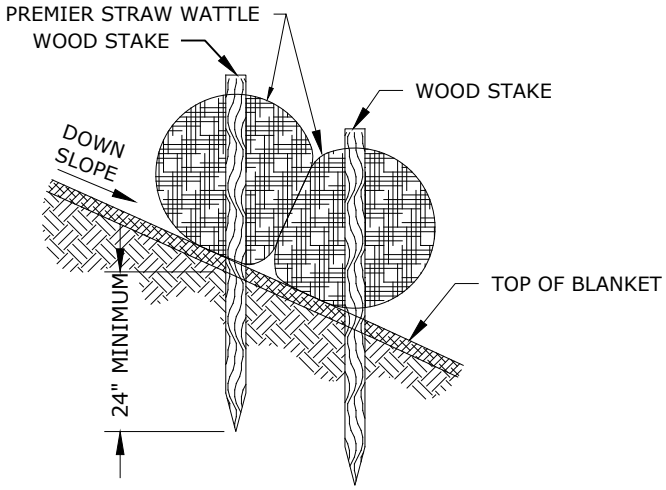

STAKE DETAIL 3 (SECTION VIEW)

NO SCALE

REV	REVISION DESCRIPTION	DATE	BY	CHK	APP
A	ISSUED FOR PERMITTING	--/--/--	PGH	SMH	BWY

This document is copyrighted and is an instrument of service by Samuel Engineering (SE). It was prepared solely for the Owner's/Client's use on this project only. Use, copy or disclosure of any information shown, in whole or in part, without SE's consent, is strictly prohibited, is a copyright breach and may be prosecuted. Any unauthorized reuse shall be at the sole risk of the user.

SAMUEL ENGINEERING
WE PROVIDE SOLUTIONS
8450 E. Crescent Parkway, Suite 200
Greenwood Village, CO 80111
Phone: 303.714.4840
Fax: 303.714.4800
Web: samuelengineering.com

PIPELINE TYPICAL
LOG WATTLES SLOPE INTERUPTION

DRAWING NUMBER
BMP-TYP-025
REV A

CAD File: S:\Projects\25020_Equinox_Pipeline\CAD\Pipeline\Drawings\Typicals\EQUINOX-TYPICALS.dwg
Plot Date: Tuesday, June 9, 2026 6:55:09 AM Plotted By: Jeff Schilz
Monochrome.ctb

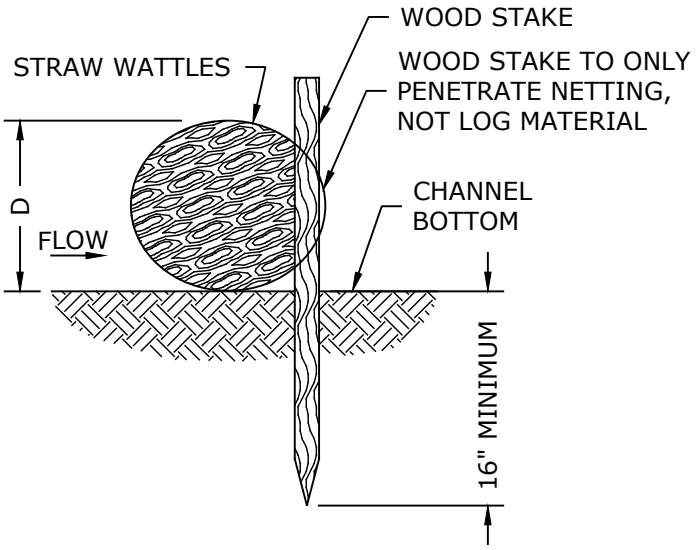

STAKE DETAILS
(NO TRENCH)
NO SCALE

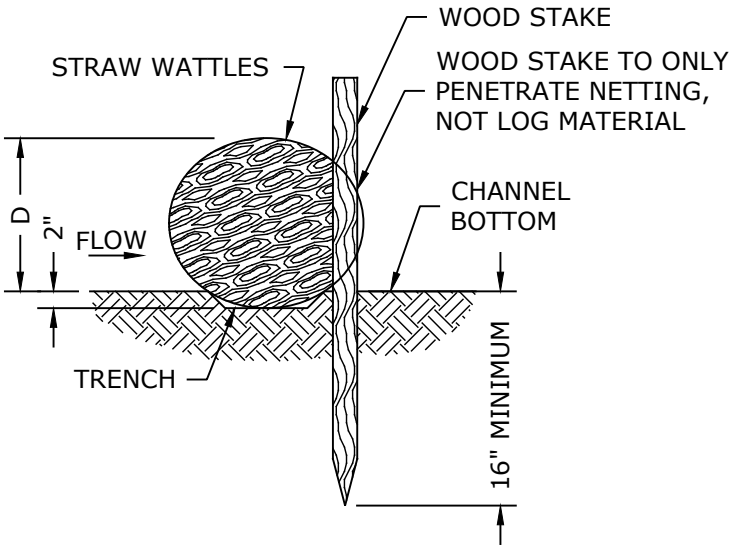

STAKE DETAIL
(WITH TRENCH)
NO SCALE

NOTE: TRENCH OPTION IS MOST APPLICABLE IN LOOSE, UNCONSOLIDATED SOILS.

1" X 1" X 30" WOODEN STAKES ARE RECOMMENDED.

18" X 30" WOODEN STAKES ARE RECOMMENDED FOR 6", 9" AND 12" SEDIMENT LOGS.

1" X 1" X 48" WOODEN STAKES ARE RECOMMENDED

18" X 48" WOODEN STAKES ARE RECOMMENDED FOR 20" SEDIMENT LOGS.

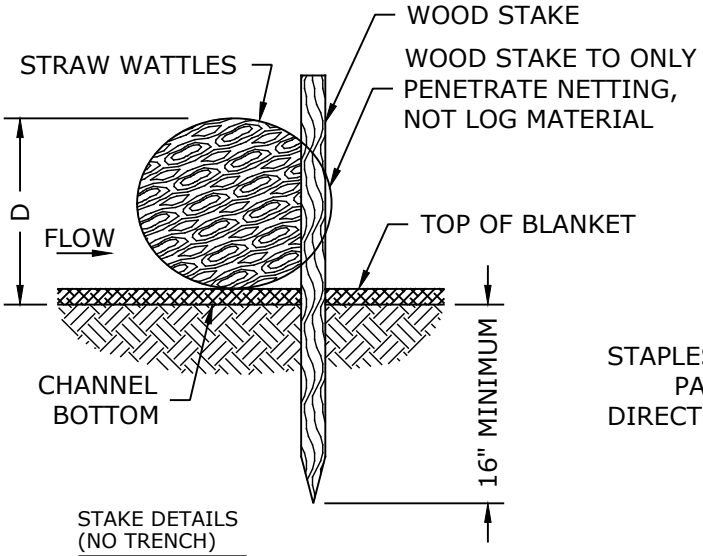

STAKE DETAILS
(NO TRENCH)
NO SCALE

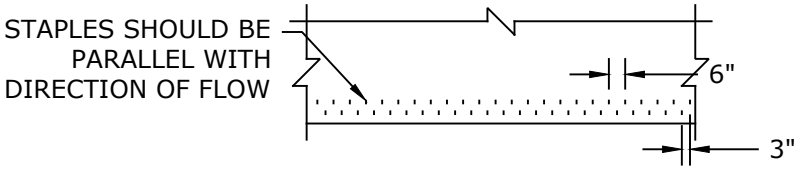

CHANNEL TERMINATION
PLAN
NO SCALE

[DISTANCE BETWEEN CHANNEL BOTTOM AND TOP OF INSTALLED SEDIMENT LOGS (D)(ft) / CHANNEL GRADIENT (%)] X 100 = STRAW WATTLES SPACING (ft)

RECOMMENDED PLACEMENT INTERVAL
BETWEEN STRAW WATTLES

REV	REVISION DESCRIPTION	DATE	BY	CHK	APP
A	ISSUED FOR PERMITTING	--/--/--	PGH	SMH	BWY

This document is copyrighted and is an instrument of service by Samuel Engineering (SE). It was prepared solely for the Owner's/Client's use on this project only. Use, copy or disclosure of any information shown, in whole or in part, without SE's consent, is strictly prohibited, is a copyright breach and may be prosecuted. Any unauthorized reuse shall be at the sole risk of the user.

SAMUEL ENGINEERING
WE PROVIDE SOLUTIONS
8450 E. Crescent Parkway, Suite 200
Greenwood Village, CO 80111
Phone: 303.714.4840
Fax: 303.714.4800
Web: samuelengineering.com

PIPELINE TYPICAL
CURLEX SEDIMENT LOGS CHANNEL

DRAWING NUMBER
BMP-TYP-026
REV A

CAD File: S:\Projects\25020_Equinox_Pipeline\CAD\Pipeline\Drawings\Typicals\EQUINOX-TYPICALS.dwg
Plot Date: Tuesday, June 9, 2026 6:55:13 AM Plotted By: Jeff Schilz
Monochrome.ctb

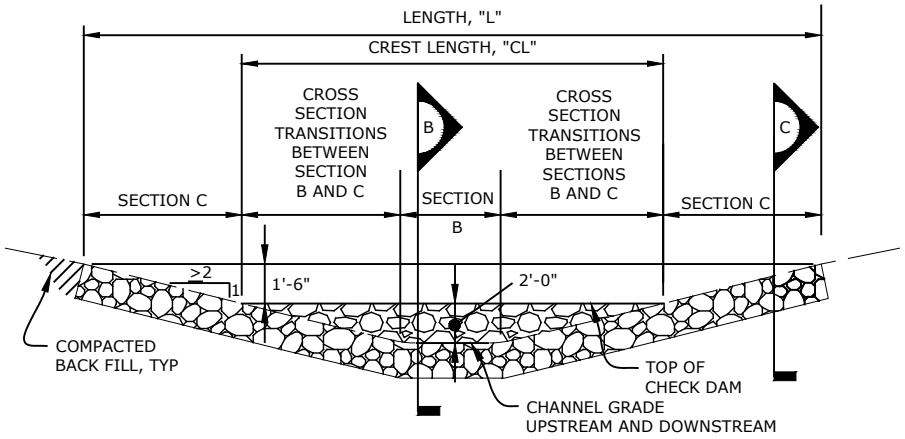

ELEVATION

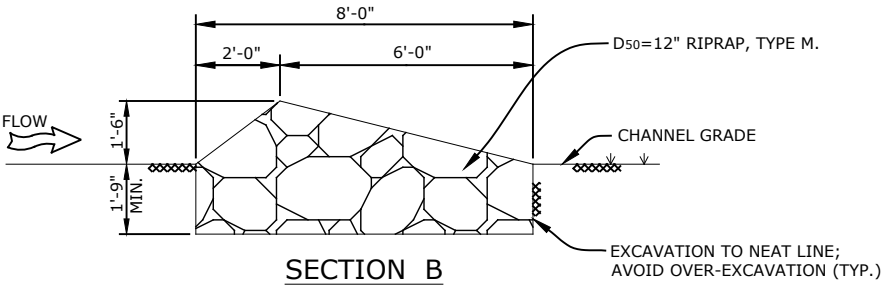

SECTION B

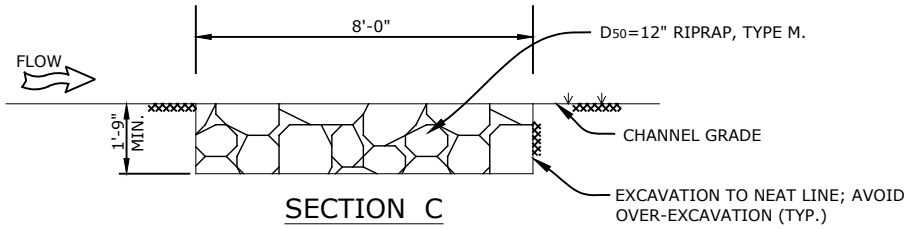

SECTION C

CHECK DAM INSTALLATION NOTES:

1. SEE PLAN VIEW FOR:
   - -LOCATIONS OF CHECK DAMS.
   - -CHECK DAM TYPE (CHECK DAM OR REINFORCED CHECK DAM).
   - -LENGTH, "L" CREST LENGTH, "CL", AND DEPTH, "D".
2. CHECK DAMS INDICATED SHALL BE INSTALLED AFTER CONSTRUCTION FENCE, BUT PRIOR TO ANY UPSTREAM LAND DISTURBING ACTIVITIES
3. RIPRAP UTILIZED FOR CHECK DAMS SHALL HAVE A D_{50} MEDIAN STONE SIZE OF 12".
4. RIPRAP PAD SHALL BE TRENCHED INTO THE GROUND A MINIMUM OF 1' - 8".
5. THE ENDS OF THE CHECK DAM SHALL BE A MINIMUM OF 1' - 6" HIGHER THAN THE CENTER OF THE CHECK DAM.

CHECK DAM MAINTENANCE NOTES:

1. THE SWMPP MANAGER OR ENVIRONMENTAL REPRESENTATIVE SHALL INSPECT CHECK DAMS WEEKLY, DURING AND AFTER ANY STORM EVENT AND MAKE REPAIRS OR CLEAN OUT AS NECESSARY.
2. SEDIMENT ACCUMULATED UPSTREAM OF CHECK DAMS SHALL BE REMOVED WHEN THE SEDIMENT DEPTH UPSTREAM OF CHECK DAM IS WITHIN 1/2 OF THE HEIGHT OF THE CREST.
3. CHECK DAMS ARE TO REMAIN IN PLACE UNTIL THE UPSTREAM DISTURBED AREA IS STABILIZED AND GRASS COVER IS APPROVED BY THE LOCAL JURISDICTION.
4. WHEN CHECK DAMS ARE REMOVED, EXCAVATIONS SHALL BE FILLED WITH SUITABLE COMPACTED BACK FILL.
5. ANY DISTURBED AREA SHALL BE SEEDED AND MULCHED AND COVERED WITH EROSION CONTROL BLANKET OR OTHERWISE STABILIZED IN A MANNER APPROVED BY THE LOCAL JURISDICTION.

REV	REVISION DESCRIPTION	DATE	BY	CHK	APP
A	ISSUED FOR PERMITTING	--/--/--	PGH	SMH	BWY

This document is copyrighted and is an instrument of service by Samuel Engineering (SE). It was prepared solely for the Owner's/Client's use on this project only. Use, copy or disclosure of any information shown, in whole or in part, without SE's consent, is strictly prohibited, is a copyright breach and may be prosecuted. Any unauthorized reuse shall be at the sole risk of the user.

SAMUEL ENGINEERING
WE PROVIDE SOLUTIONS
8450 E. Crescent Parkway, Suite 200
Greenwood Village, CO 80111
Phone: 303.714.4840
Fax: 303.714.4800
Web: samuelengineering.com

PIPELINE TYPICAL
CHECK DAM

DRAWING NUMBER
BMP-TYP-027
REV A

CAD File: S:\Projects\25020_Equinox_Pipeline\CAD\Pipeline\Drawings\Typicals\EQUINOX-TYPICALS.dwg
Plot Date: Tuesday, June 9, 2026 6:55:18 AM Plotted By: Jeff Schilz
Monochrome.ctb

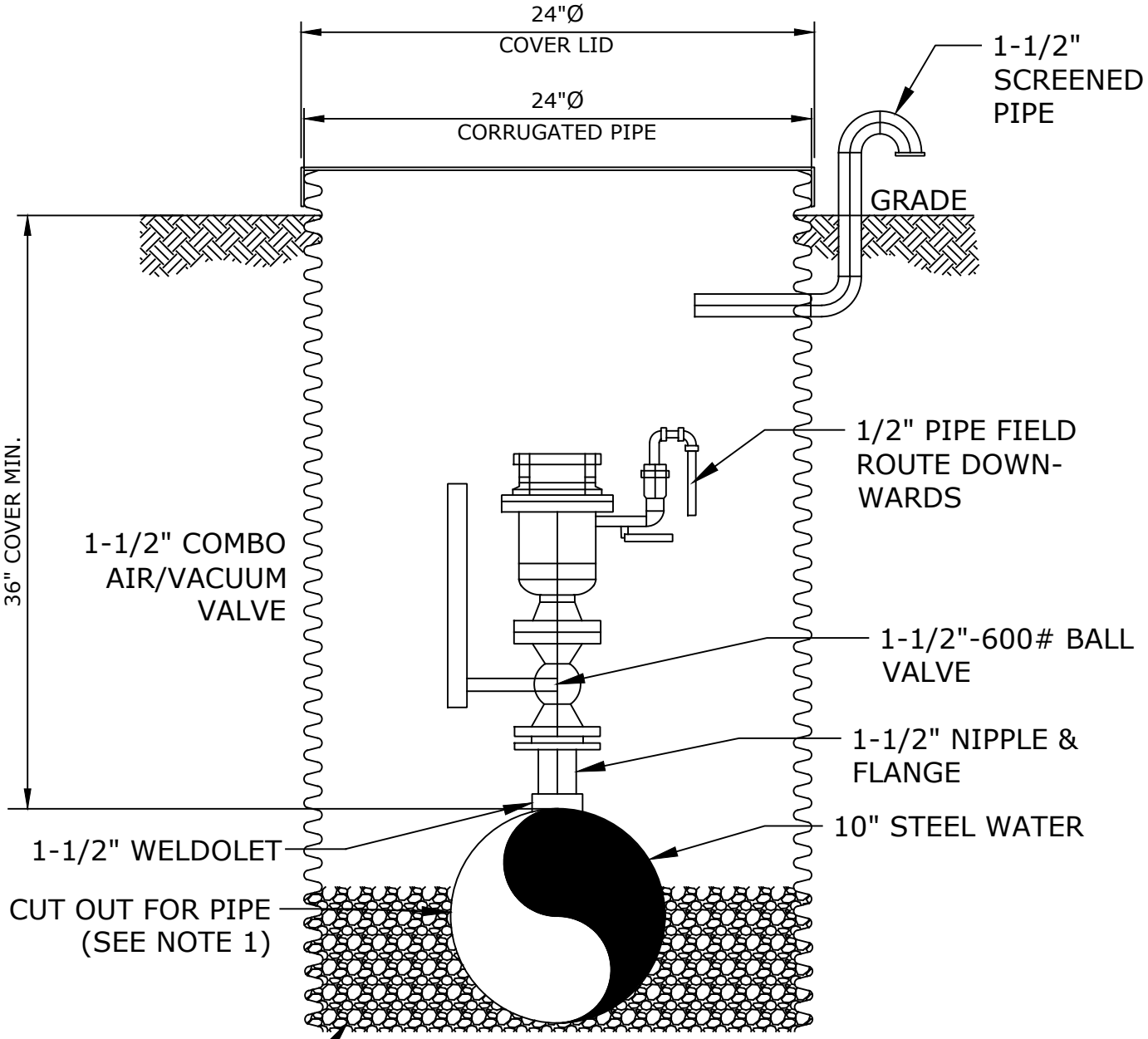

TYPICAL AIR/VACUUM ASSEMBLY DETAIL

NOTES:

1. VAULT SHALL NOT REST ON PIPE.

NUMBER	TITLE

REFERENCE DRAWINGS

CLIENT	PROJECT MANAGER	PROJECT ENGINEER	CHECK
	KM	BVE	CCR

NO.	DESCRIPTION	DATE	BY
A	ISSUED FOR PERMIT	02/21/25	JTS

REVISIONS

This document is copyrighted and is an instrument of service by Samuel Engineering (SE). It was prepared solely for the Owner's/Client's use on this project only. Use, copy or disclosure of any information shown, in whole or in part, without SE's consent, is strictly prohibited, is a copyright breach and may be prosecuted. Any unauthorized reuse shall be at the sole risk of the user.

CLIENT: EQUINOX GOLD

PROJECT LOCATION: CLARK COUNTY, NV & SAN BERNADINO, CA

SAMUEL ENGINEERING
WE PROVIDE SOLUTIONS
8450 E. Crescent Parkway, Suite 200
Greenwood Village, CO 80111
Phone: 303.714.4840
Fax: 303.714.4800
Web: samuelengineering.com

TITLE: EQUINOX PRELIMINARY PIPELINE ALIGNMENT PACKAGE
CASTLE MOUNTAIN PHASE 2
EXPANSION FEED ENGINEERING
AIR/VACUUM VALVE DETAIL

PROJECT NUMBER: **25020-01**

DRAWING NUMBER: 25020-PL-800

REV. A

CAD File: S:\Projects\25020_Equinox_Pipeline\CAD\Pipeline\Drawings\Typicals\EQUINOX-TYPICALS.dwg
Plot Date: Tuesday, June 9, 2026 6:55:24 AM Plotted By: Jeff Schilz
CTB Used: Monochrome.ctb