APPENDIX E

EQUIPMENT INFORMATION

APPENDIX E

Exhibits

E-1 EXAMPLE FACILITY INSPECTION SHEETS

E-2 EXAMPLE EMERGENCY EQUIPMENT LIST

E-3 TANK ASSESSMENT REPORT

E-4 SEIZMIC EVALUATION

E-5 DUAL WALL ABOVE GROUND STORAGE TANK SPECIFICATIONS AND CERTIFICATION

E-6 SOLVENT TANK, RETURN AND FILL STATION, AND PIPING SCHEMATIC

E-7 TYPICAL RETURN AND FILL CONSTRUCTION DIAGRAM AND DETAILS

E-8 TYPICAL SCHEMATIC WIRING DIAGRAM FOR HIGH-LEVEL-ALARM-THREE TANK SYSTEM AND SPECIFICATIONS

E-9 TYPICAL TANK VENTS AND CONVERSATION VENT SPECIFATIONS

E-10 TYPICAL TANK ACCESS CONTAINER

E-11 TYPICAL TANK GUAGE DETAILS

E-12 SPECIFICATIONS FOR CONTAINERS

E-13 EXAMPLE PALLET LAYOUT – STORAGE AREA

E-14 SECONDARY CONTAINMENT CALCULATIONS

E-15 SUBPART CC COMPLIANCE PLAN

E-16 SUBPART BB EQUIPMENT SCHEMATIC AND COMPLIANCE PLAN

EXHIBIT E-1

EXAMPLE FACILITY INSPECTION SHEETS

Daily Inspection of Safety and Emergency Equipment

	Monday	Tuesday	Wednesday	Thursday	Friday
Inspector's Initials					
Date					
Time					

A = Acceptable N=Not Acceptable

Safety and Emergency Equipment

Fire Extinguishers Fully Charged and Inspected	A N	A N	A N	A N	A N
Eye Wash stand Bottles Full and Not Expired	A N	A N	A N	A N	A N
First Aid Kit Stocked	A N	A N	A N	A N	A N
Spill Clean-Up Equipment Absorbent, Broom, Shovel	A N	A N	A N	A N	A N
Personal Protective Equipment In Stock	A N	A N	A N	A N	A N

Security Devices

Gates and Locks Working Properly	A N	A N	A N	A N	A N
Fence Intact and Signs Posted	A N	A N	A N	A N	A N
Trash Dumpster No Costumer Waste Labels, Etc.	A N	A N	A N	A N	A N

Comments or Observations

_____

_____

_____

_____

Daily Inspection of Storage Tank System

	Monday	Tuesday	Wednesday	Thursday	Friday
Inspector Initials					
Date					
Time					

Storage Tanks 49 gallons/inch

Unused Tank	Level (ft.-in.)									
	Gallons									
150 Product Tank	Level (ft.-in.)									
	Gallons									
Used Solvent Tank	Level (ft.-in.)									
	Gallons									

A = Acceptable N = Not Acceptable

Tank Exterior	A	N	A	N	A	N	A	N	A	N
Volume Gauge	A	N	A	N	A	N	A	N	A	N
High Level Alarms	A	N	A	N	A	N	A	N	A	N
Vacuum Pressure Gauge (Negative reading)	A	N	A	N	A	N	A	N	A	N

Containment Area

Any material which spills, leaks, or otherwise accumulates in the area, including rainwater, must be completely removed within 24 hours

Area Dry	A	N	A	N	A	N	A	N	A	N
Free of Cracks/Deterioration	A	N	A	N	A	N	A	N	A	N

Comments or Observations

_____

_____

_____

_____

_____

_____

Daily Inspection of Storage Tank System (continued)

Inspector's Name and Title: _____

	Monday	Tuesday	Wednesday	Thursday	Friday
Inspector Initials					
Date					
Time					

Transfer Pumps and Hoses

Pump Seals	A	N	A	N	A	N	A	N	A	N
If 'N' circled, describe problem:										
Motors	A	N	A	N	A	N	A	N	A	N
If 'N' circled, describe problem:										
Fittings	A	N	A	N	A	N	A	N	A	N
If 'N' circled, describe problem:										
Valves	A	N	A	N	A	N	A	N	A	N
If 'N' circled, describe problem:										
Hose Connections and Fittings	A	N	A	N	A	N	A	N	A	N
If 'N' circled, describe problem:										
Hose Body	A	N	A	N	A	N	A	N	A	N
If 'N' circled, describe problem:										

Return and Fill Station

Wet Dumpster	A	N	A	N	A	N	A	N	A	N
If 'N' circled, describe problem:										
Secondary Containment	A	N	A	N	A	N	A	N	A	N
If 'N' circled, describe problem:										
Loading/Unloading Area	A	N	A	N	A	N	A	N	A	N
If 'N' circled, describe problem:										

Comments, Observations, and Repairs

_____

_____

_____

_____

Daily Inspection of Transfer Waste and Storage Waste

		Monday	Tuesday	Wednesday	Thursday	Friday
	Inspector Initials					
	Date					
	Time					

Transfer Waste

		each - gallons	each - gallons	each - gallons	each - gallons	each - gallons
Containers	5 gal					
	15 gal					
	30 gal					
	55 gal					
	Wrangler Bags					
Flourescent Lamps	4 ft					
	8 ft					
Film/Plates	Gaylords					
Yellow Drums	55 gal					
Poly Tote	330 gal					
	Total					

Storage Waste

		each - gallons	each - gallons	each - gallons	each - gallons	each - gallons
IC Waste	15 gal					
Dry Cleaning	15 gal					
	30 gal					
	55 gal					
Oil Filters	30 gal					
	55 gal					
Paint/Lacquer	5 gal					
	15 gal					
	30 gal					
	55 gal					
Photo	5 gal					
	15 gal					
	30 gal					
	55 gal					
	Total					

A = Acceptable N = Not Acceptable

Permit Capacity 147,430 Gal Each					
10 Day Limitation					
Condition of Drum/Boxes					
Stacking/Placement Aisle Space					
Loading/Unloading Area					

Comments:

DAILY COUNT

Date: _____

Mon Tue Wed Thu Fri

Clean Solvent		Dirty Solvent
Unused tank 10,805 Foot Marker _____ Gal _____		Foot Marker _____ Gal _____
150 9,506 Foot Marker _____ Gal _____		Tank Max Levels Unused tank: 18' 4.5" / 10,805 150: 16' 2" / 9,506 Dirty: 18' 4.5" / 10,805
IC 15 gal _____		Oil Filters 30 gal _____ 55 gal _____
DC 15 gal _____ 30 gal _____ 55 gal _____		Sludge 30 gal _____ 55 gal _____
Imaging (Silver Sludge) 55 gal _____ 30 gal _____ 16 gal _____ 5 gal _____		CWS 55 gal _____ 30 gal _____ 16 gal _____ 5 gal _____
MRT (Metal Receipt Ticket) 55 gal _____		Paint (Yellow Label, DOT 14xxx) 55 gal _____ 30 gal _____ 16 gal _____ 5 gal _____
Poly Tote 330 gal _____		
Gaylord _____		Wrangler Bag _____
Flourescent Lamps 4' _____		8' _____

Revision 2: October 21, 2011

INSPECTION LOG SHEET FOR:
DAILY INSPECTION OF:
TA1NK EQUIPMENT
(Subject to Subpart BB)

INSPECTOR'S NAME/TITLE:_____

INSPECTOR'S SIGNATURE DAILY

MONDAY	TUESDAY	WEDNESDAY	THURSDAY	FRIDAY

___/___/___ ___/___/___ ___/___/___ ___/___/___ ___/___/___
Date (M/D/Y)

_____ _____ _____ _____ _____
Time

Pump, Flange or Valve Number	MON.	TUES	WED.	THURS	FRI
1 2" Ball Valve	A N	A N	A N	A N	A N
2. 2" Threaded Union	A N	A N	A N	A N	A N
3. 2" Flex Connector	A N	A N	A N	A N	A N
4. 2" CUP Valve	A N	A N	A N	A N	A N
5. 1.5" Ball Valve	A N	A N	A N	A N	A N
6. 1.5" Connection	A N	A N	A N	A N	A N
7. 1.5" Flex Connection	A N	A N	A N	A N	A N
8. 1.5" Threaded Connection	A N	A N	A N	A N	A N
9. 1.5" Threaded Connection	A N	A N	A N	A N	A N
11 2" Ball Valve	A N	A N	A N	A N	A N
12. 2" to 1.5" reducer	A N	A N	A N	A N	A N
13. 1.5" Threaded Connection	A N	A N	A N	A N	A N
14. 1.5" Threaded Ball Valve	A N	A N	A N	A N	A N
15. 1.5" Threaded Connection	A N	A N	A N	A N	A N
16. UMS Pump	A N	A N	A N	A N	A N
17. 1.5" Ball Valve	A N	A N	A N	A N	A N
18. 2" Ball Valve With Flange	A N	A N	A N	A N	A N
19. Threaded Valve Fitting	A N	A N	A N	A N	A N
20. Flange Fitting	A N	A N	A N	A N	A N
21. 2" Threaded Ball Valve	A N	A N	A N	A N	A N
22. 2" Threaded Union	A N	A N	A N	A N	A N
23. 2" Flex Connector	A N	A N	A N	A N	A N
24. 2" Threaded Union	A N	A N	A N	A N	A N
26. 2" Threaded Connection	A N	A N	A N	A N	A N
27. 2" Threaded Connection	A N	A N	A N	A N	A N
28. 1.5" Threaded Connection	A N	A N	A N	A N	A N
30. 1.5" Threaded Ball Valve	A N	A N	A N	A N	A N
31. 2" Threaded Connection	A N	A N	A N	A N	A N
32. 2" Threaded Connection	A N	A N	A N	A N	A N
33. 1.5" Threaded Connection	A N	A N	A N	A N	A N
34. 2" Connection	A N	A N	A N	A N	A N
36. 3" Back Flow Valve	A N	A N	A N	A N	A N
37. 3" Back Flow Valve	A N	A N	A N	A N	A N
38. 2" Connection	A N	A N	A N	A N	A N
40. 38" Manway cover	A N	A N	A N	A N	A N

If 'N', enter pump or valve #_____ and circle appropriate problems: potential leak, sticking, wear, does not operate smoothly, other:_____For all leaks and potential leaks, the Leak Detection and Repair Record must be completed. *Add short descriptions of unit being inspected.
**A= Acceptable N = Not Acceptable.

INSPECTION LOG SHEET FOR
DAILY INSPECTION OF
TANK EQUIPMENT
(Subject to Subpart BB)

INSPECTOR'S NAME/TITLE:_____

INSPECTOR'S SIGNATURE DAILY

MONDAY	TUESDAY	WEDNESDAY	THURSDAY	FRIDAY

___/___/___. ___/___/___. ___/___/___. ___/___/___. ___/___/___.
Date (M/D/Y)

_____. _____ _____. _____. _____.
Time

Pump, Flange or Valve Number	MON.	TUES	WED.	THURS	FRI
41. Emergency Shut-off Valve	A N	A N	A N	A N	A N
42. 3" Ball Valve	A N	A N	A N	A N	A N
43. 1.5" Union to 1.5"/2.0"Coupling	A N	A N	A N	A N	A N
44. Coupling Assembly	A N	A N	A N	A N	A N
45 7" Diameter Basket Strainer	A N	A N	A N	A N	A N
46. 2" Ball Valve With Flange	A N	A N	A N	A N	A N
47. 2" Valve and Nippler	A N	A N	A N	A N	A N
010. Recirculation Pump	A N	A N	A N	A N	A N
020. Recirculation Pump	A N	A N	A N	A N	A N

If 'N', enter pump or valve #_____ and circle appropriate problems: potential leak, sticking, wear, does not operate smoothly, other:_____ _____.For all leaks and potential leaks, the Leak Detection and Repair Record must be completed.v*Add short descriptions of unit being inspected.
**A= Acceptable N = Not Acceptable.

Sub-part CC Visual Inspection Checklist

End of Week Container Inspection

Complete this checklist on the last day of the service week when the facility inspection will not be conducted within 24 hours. The inspection on containers will supplement container inspections completed during facility inspections during the work week.

Inspector Name: _____ Signature: _____

Date of Inspection: _____

Condition of containers: (Circle "A" if the condition of all containers is acceptable; circle "N" if the condition of one or more containers is unacceptable).

A N

If "N"; circle appropriate problem: Missing or Loose Lids; Missing, Incorrect, or Incomplete Labels; Rust; Distortion; Other: _____

_____

Annual Visual Tank Inspection

Visual Tank Inspection

Complete this inspection once in January to satisfy the annual inspection required under Subpart CC.

Inspector Name: _____ Signature: _____

Date of Inspection: ___/___/___

Action Taken to Correct Unacceptable Condition: _____

_____

EXHIBIT E-2

EXAMPLE EMERGENCY EQUIPMENT LIST

EXAMPLE EMERGENCY EQUIPMENT LIST

The following equipment shall be located in the locker room area and the supply checked monthly:

Gloves – Gloves which are compatible with parts washer solvents are to be used when Handling the solvents

Safety Glasses or Face Mask – Whichever the worker prefers, is to be worn when loading or Unloading the solvent.

Plastic Aprons – Are available for the situations where a solvent may get on the workers Clothing.

Shovels – In the event of a spill, shovels will be used to pick-up contaminated sorbent Material

Decontamination of all equipment is accomplished by washing with soap and water.

Eye-Wash Stand	The eye wash stations are at several locations located at the Service Center, as Shown on Figure F-3. The workers should try the stand and be familiar with its preparation. The eye wash stand should be checked once a week for operation.
Showers	Located in locker room area. Showers should be checked periodically to ascertain that They are operational.
Ventilation	Any area that is closed and collects vapors should be avoided or equipped with proper Fans to ensure adequate ventilation
Fire Extinguisher	The service center should have a minimum of two 10-pound ABC extinguishers, located At the points where solvents are transferred. An ABC extinguisher is a universal system Used on paper, wood, and electrical, as well as solvent fires. The extinguishers must be Full and carry an inspection tag.
Absorbent Materials	An adequate supply (200 sheets, 2 bales and/or vermiculate) should be on hand to handle small spills. Located in the loading and unloading area and warehouse. In the event of a Spill, contaminated absorbent material will be placed in drums and handled as hazardous waste

EXHIBIT E-3

TANK ASSESSMENT REPORT

New Tank (Since after 1986)

MTI

Acclaim Materials Testing & Inspection, LLP
5900 Emerald Avenue
Las Vegas, Nevada
(702) 938-0650 Fax (702) 938-0649

Kimberly Colbert
Safety Kleen
2120 South Yale
Santa Ana, Ca 92704

October 2, 2002
Revised October 22, 2002
File No: 02-1265

Subject: Visual Inspection of new piping and tank systems at 4582 Donavan Way, Las Vegas, Nevada

Dear Ms. Colbert:

As requested, Acclaim MTI, LLP (AMTI) visited the subject site on October 2, 2002. The purpose of our visit was to visually inspected the above ground tank system and piping for possible various visual discrepancies.

The following was inspected as per 40 CFR 264.192 (b) guidelines. Our observations revealed that there were no visible weld breaks, punctures, scrapes of the protective coatings, cracks, corrosion and/or any other structural damage.

LIMITATIONS

Based on the results of our field and laboratory tests and our observations performed during the construction activities, it is our professional opinion that the previously described items have been constructed to the best of our knowledge in conformance with the applicable reports and plans.

Representatives of Acclaim MTI, LLP did not supervise or direct contractor activity, nor did Acclaim MIT, LLP alter, amend or change project specifications. This statement of conformance pertains to only those items observed and tested by Acclaim MTI, LLP for the subject project during the time period when we were on-site.

The services provided as described in this report include professional opinions and judgment based on the data collected and our field observations. These services have been performed according to generally accepted inspection practices that exist in the Clark County area at this time. No warranty, express or implied, is provided.

Thank you for letting us be of service to you, if we can be of any assistance to you please do not hesitate to call at you convenience.

Sincerely,
Acclaim MTI, LLP

PROFESSIONAL ENGINEER · STATE OF NEVADA
KIMANH T. LE
EXP. 12/31/03
CIVIL
No. 14816

10-22-02

Kishan Singh
Senior Project Manager

Kimanh T. Le, P.E.
Principal Engineer

W:\accmti\Acclaim Project Files\job numbers\1000-1499\1250-1274\02-1265 4582 Donavan Way\Correspondence\Tank System & Piping.doc

BROWN-MINNEAPOLIS TANK CO.

Brown-Minneapolis Tank - Rocky Mountain
520 West 2000 South Orem, UT 84058-7528
Phone: 801-373-8520 • Fax: 801-377-1516
www.bmt-tank.com

October 10, 2002

Glenn Smith
Safety-Kleen Systems, Inc
3303 Carrier Road
Sarcoxie, MO 64862

RE: BMT Sales Order # 7435, dated March 4,2002
Industrial Age Contractors P.O. # 182-1
Safety-Kleen, North Las Vegas, NV

Gentlemen:

This is to certify the 10,000 gallon and the two-12,000 gallon vertical double wall storage tanks, shipped on the above referenced sales order were designed, fabricated and tested per Underwriters Laboratories, Inc. "Standard For Steel Aboveground Tanks For Flammable and Combustible Liquids, UL-142, Seventh Edition" that became effective April 1,1994, and so labeled. The UL label numbers are A60963, A60964 and A60965.

Specifically, Sections 5 (Materials), 6 (Joints), 7 (Tank Connections), 8 (Venting), 9 (Manholes), 10 (Fill, Drain and Gauge Openings) and 11 (Painting) were used. Also applicable to the tanks, was "Part 1 – Primary Containment Tanks", Sections 14 and 15, along with "Part II – Secondary Containment Tanks", Sections 22 and 23. Testing of the tanks was in accordance with "Performance Test Methods", Sections 39 and 45. "Markings" were in accordance with Sections 48 and 49. All subsequent addendum was incorporated into these procedures.

If I can further be of assistance, please contact me.

Sincerely,

Frank Par

Frank Parsons
Regional Manager

CC: John Allen

BROWN-MINNEAPOLIS TANK CO.
Brown-Minneapolis Tank - Rocky Mountain
520 West 2000 South Orem, UT 84058-7528
Phone: 801-373-8520 • Fax: 801-377-1516
www.bmt-tank.com

Mr. Glen Smith
Safety-Kleen
3303 Terrier Rd.
Sarcoxie, MO. 64862

Dear Glen:

Per your request, included you will find a copy of our test report for your UMS Tank. All of our Aboveground Storage Tanks and built to UL-142 Standards and we are inspected on a regular basis by both UL and Steel Tank Institute.

I hope this satisfies your requirements however, if you need anything else please feel free to call.

Sincerely,

Dale J. Kovalczyk
Brown-Minneapolis Tank
Orem, Utah

Date Tank Painted 4-21-1 KA

Sales Order # 7435-02 1

Work Order #

STI #

UL # A 60064

Tank Size 10' X 20' X 14'
Single Wall or Inside Wall (Exact Dimensions)

Compartment: Inside Length
#1 #2 #3

Tank Size X X
Outside Double Wall Tank Dimensions

Inside Tank for Double Wall	Sure- ☑ ✓ V.A.G.	Type I	Type II
	Fireguard		

Air Tested	By: MIKE	Date 4-22-02
Air Retested	By: DERRY	Date 4-23-02

Air Test O.S. Tank	By: [illegible]	Date: [illegible]
Air Retested O.S. Tank	By: [illegible]	Date: [illegible]
Vacuum Test O.S. D.W. Tank	By: [illegible]	Date: [illegible]

SPECIAL TANK:

Aboveground	✓	Butt Welded	NA	Non Code	NA
Horizontal	NA	Sandblasted I.S.	NA	sti-P3	NA
Vertical	✓	Special Paint I.S.	NA	F921	NA
Underground	NA	Special Paint O.S.	✓	Dike F911	NA

An underground with manhole/hole in neck verified by: NA

Shop 01 4/95 DB

DIVISION OF FIRE PREVENTION — CITY OF NORTH LAS VEGAS

PERMIT NUMBER 17550	INSPECTION NUMBER			
JOB ADDRESS 4582 Donovan Inlay				
Lot No.	Block No.	Subdivision Name Safety Kleen		
Fire Dept. Map No	Job Phone	Call-In-Date 9/25/02	Call-In-Time	Scheduled Date 9/26/02
Inspection No. 513/517		Inspector Name Way/Ryan		

INSPECTION REQUESTED: AST - Product Line Air Test

Plans: OK

Permit: OK

105° Solvent Product Line: OK 30 PSI @ 0855 30 PSI @ 0925

150° Solvent Product Line: OK 30 PSI @ 0855 30 PSI @ 0925

Waste Product Line: OK 30 PSI @ 0855 30 PSI @ 0925

150° Solvent (Virgin Mineral) Green Line: All steel piping

105° Solvent (Recycled/Clean) Orange Line: All steel piping

Waste Brown Line: All steel piping

Waste Pump: Marlow ~~Model # 15 HRC 189AD~~ Serial # 913D993
1.5 HR4 9EC

Green Line (Virgin Mineral) Model # 20 EVP-10A1 Serial # H6254144

Orange Line (Recycled/Clean) Model # 20 EVP-10A1 Serial # H6254126

☐ Partial Inspection	☐ Partial Approval	☐ Partial Description		
☒ APPROVED (A)	☐ STOP WORK (S)	☐ COMMENTS (C)	☐ Temporary - Until Approved (T)	☐ HOLD (H)
☐ REJECTED (R)		☐ PERMIT REQUIRED		
☐ REFER (F)				
INSPECTOR SIGNATURE [signature]			INSPECTION DATE 9/26/02	
☐ PROJECT COMPLETED	☑ BRING HARD CARD WITH FIRE, QUALITY CONTROL & PLANNING APPROVALS SIGNED OFF TO BLDG & SAFETY FOR C of O ISSUANCE (Commercial Only)			

~~FOR INSPECTIONS CALL 633-1102~~ ~~FOR FURTHER INFORMATION CALL 633-1102~~

DIVISION OF FIRE PREVENTION CITY OF NORTH LAS VEGAS

PERMIT NUMBER 17550	INSPECTION NUMBER			
JOB ADDRESS 4582 Donovan Way				
Lot No.	Block No.	Subdivision Name Safety Kleen		
Fire Dept. Map No	Job Phone	Call-In-Date 10/2/02	Call-In-Time	Schedule Date 10/3/02
Inspection No. 513/511		Inspector Name Way / Jackson		
INSPECTION REQUESTED AST - Fire Final				

Plans: OK
Permit: OK
Fire Extinguisher: OK 3A40BC
Emergency Shut-off: OK
Hazmat Placarding: OK
Safety Signs: OK
Dispenser/Nozzle Inspection: OK

☐ Partial Inspection	☐ Partial Approval	☐ Partial Description		
☒ APPROVED (A)	☐ STOP WORK (S)	☐ COMMENTS (C)	☐ Temporary - Until Approval (T)	☐ HOLD (H)
☐ REJECTED (R)		☐ PERMIT REQUIRED		
☐ REFER (F)				
INSPECTOR SIGNATURE [signature]				INSPECTION DATE 10/3/02
☐ PROJECT COMPLETED	☒ BRING HARD CARD WITH FIRE, QUALITY CONTROL & PLANNING APPROVALS SIGNED OFF TO BLDG & SAFETY FOR C of O ENNUANCE (Commercial Only)			

~~FOR INSPECTIONS CALL 633-1102~~ ~~FOR FURTHER INFORMATION CALL 633-1102~~

INSPECTION CARD

KJB 1590

BUILDING SAFETY DEPARTMENT - CITY OF NORTH LAS VEGAS, NEVADA
FOR INSPECTIONS CALL 633-1576 BETWEEN 7:30 AM AND 3:30 PM, Mon. - Fri.
Construction over 600 square feet must call Const. Services first at 390-4407
Approved plans must be on job site during construction or no inspections will be made

Permit No: 17530 Issued on: 8/1/02
Parcel #: 139-16-1-005
Job Address: 4582 DONOVAN WY.
Type of Work: ADDCOM
Total SqFt:
Type of Const:
Occ Group:
Valuation: $15,000.00

Owner
ATPLLC
522 N ARDEN DR.

Contractor
SOUTHERN NEVADA PETROLEUM INC (702)451-6174 x
3900 EMERALD AVE. STE B. LAS VEGAS, NV 89122
State Lic No: 51663 B2 4, City Lic No: 70330

Project Description: SAFETY KLEEN
INSTALL ABOVE GROUND STORAGE TANKS WITH ELECTRICAL FOR PUMPS. POUR EQUIPMENT PAD. SET TENANT EQUIPMENT, HOOK UP ELECTRICAL & PIPING. SEE APPROVED PLANS FOR DETAILS.
5/22/02 - INCLUDES ELECTRICAL BY ELECTROMAX PER GEORGE /LBL

*Certificate of pad elevation required at time of footing inspection.

DESCRIPTION	DATE	Appr.By/Comments
Const. Services (390-4407)	Construct over 600 SF must call	
Footing, layout, rebar, zoning	5-8-2002	RW/PM/BH
Stem wall/forms and rebar		
Pre-Geout 4' 8' 16' 20' 24'		
Underground electrical		
Underground plumbing		
Underground gas		
Pre slab	5-8-2002	RW/PM/BH

Pour no concrete until above is approved

Roof Sheathing/shear holdown		
Top out plumbing		
Rough electrical	see CN 8-20-02 09-12-02	HP
Rough A/C		
Framing		
Fireplace rough		
Insulation		
Rough fire protection		

Do not sheetrock until above is inspected

Grid ceiling insp		
Drywall nailing		
Exterior lath		
Stucco scratch/brown		
Final plumbing	All Fuel lines to Tanks F.P. Pkgs	
Final mechanical		PA
Final electrical	09-12-02	HP
Final building	10-3-2002	PM

Homeowner is responsible to maintain proper drainage

DESCRIPTION	DATE	Appr.By/Comments
On-site sewer		
On-site water		
Building sewer		
Temporary gas tag 30 days		
Temporary power tag 30 days		

FIRE DEPARTMENT

Kicker/flush		
Underground hydro		
Underground final/flow		
Sprinkler system hydro		
Fire alarm		
Knox Box		
Final fire	10/3/02	DW
Hydrant		

Certificate of occupancy	Pumps/Equipment Pkg	
B-Occ.-Temp/Sales Office		

HEALTH DEPARTMENT 385-1291
PLANNING DEPARTMENT 633-1537
PUBLIC WORKS 390-4407
FIRE DEPARTMENT 633-1104 10/3/02
BUILDING DEPARTMENT 633-1576 10-3-2002

Bring this card with Public Works, Fire, Building and Planning Dept. approvals signed off to the Building Safety Dept. for issuance of the Certificate of Occupancy.

POST THIS CARD ON FRONT OF BUILDING
THIS PERMIT EXPIRES 180 DAYS FROM ISSUANCE

BUILDING PERMIT

BUILDING SAFETY DIVISION - CITY OF NORTH LAS VEGAS, NEVADA
FOR INSPECTIONS CALL 633-1574 BETWEEN 7:30 AM AND 3:30 PM Mon. - Fri.

1570

Permit No: 17550 Date of Issue: 5/1/02

Parcel #: 139-01-1-1003 Job Address: 4582 DONOVAN WY.

Owner
ATPLLC
632 N ARDEN DR

Contractor
SOUTHERN NEVADA PETROLEUM INC
(702)451-6174 x
3900 EMERALD AVE, STE B
LAS VEGAS, NV 89122-
State Lic No: 51663 B2.4. City Lic No: 70130

Project Description: INSTALL ABOVE GROUND STORAGE TANKS WITH ELECTRICAL FOR PUMPS, POUR EQUIPMENT PAD, SET TENANT EQUIPMENT, HOOK UP ELECTRICAL & PIPING. SEE APPROVED PLANS FOR DETAILS.

CONT: MANUEL BENGOCHES, 3900 EMERALD AVE, LV 89122; 386-1605; 387-1008

Type of Work: ADDCOM
Type of Const:
Occ Group:
Occ Load:
Stories:
Bldg Height:
Dwell Units:
Total SqFt:
Living Area:
Garage Area:
Linear Ft:
Valuation: $15,000
Zoning: M-2

Fees

Fee Description	Amount	Status
ELECTRICAL FEE	25.00	PAID
PERMIT FEE 7-27	132.60	PAID
PLAN REVIEW FEE 7-27	96.19	PAID
PLUMBING FEE	27.00	PAID
SEWER FEE	0.00	
TRANSPORTATION FEE	0.00	
Total	280.79	

I have read the above and know the contents thereof to be true and correct. I further state that I am familiar with any ordinances of the city of North Las Vegas and with the statutes of the State of Nevada now in effect covering the construction of structures of the type above and agree to construct said structure in conformity therewith. I further agree any error in checking the plans submitted herewith or in examination of the above on the part of the inspector or examiner does not relieve me, the applicant of the requirement to comply with all state and local codes, ordinances and laws governing same.

****THIS PERMIT EXPIRES 180 DAYS FROM ISSUANCE****
Homeowner is responsible to maintain proper drainage

Signed: (Applicant) _____ Approved: (Bldg. Div.) _____

BUILDING DIV. COPY Customer Copy County Assessor Copy

Electrical Permit OK

QTY.	MATERIAL	PRICE	AMOUNT

Industrial Age Contractors, Inc.
P.O. Box 101133
Fort Worth, TX.76185

(817) 927-2900
FAX (817) 926-4908

INVOICE NO.

JOB PHONE: | DATE OF ORDER: 6/5/02
JOB NAME/LOCATION: #213 WEN

TO: SAFETY KLEEN
LAS VEGAS

PHONE:
ORDER TAKEN BY:
TERMS:

DESCRIPTION OF WORK	AMOUNT
RONNIE/TONY	
installed 2" pipe in [illegible] builders	
out [illegible] and [illegible] and [illegible]	
floor on pens under dock done clean up	
inside and out what [illegible] for [illegible]	10 HRS

LABOR	HOURS	RATE	AMOUNT	
				TOTAL MATERIAL
				TOTAL LABOR
WORK ORDERED BY		DATE COMPLETED		TAX
SIGNATURE (I hereby acknowledge the satisfactory completion of the above described work.)				Thank You! PAY THIS AMOUNT →

INVOICE NO.

JOB PHONE: | DATE OF ORDER: 6/12/02
JOB NAME/LOCATION: #213 WEN

PHONE:
ORDER TAKEN BY:

DESCRIPTION OF WORK	AMOUNT
Lasers and [illegible]	
[illegible] to get [illegible]	
worked on out bed	
	8 HRS
	0

	AMOUNT	
TOTAL MATERIAL		
TOTAL LABOR		
TAX		
Thank You! PAY THIS AMOUNT →		

QTY.	MATERIAL	PRICE	AMOUNT

Industrial Age Contractors, Inc.
P.O. Box 101133
Fort Worth, TX 76185

(817) 927-2900
FAX (817) 926-4908

INVOICE NO.

JOB PHONE

DATE OF ORDER 6/19/02

JOB NAME/LOCATION #213 WEN

TO: SAFETY KLEEN
LAS VEGAS

PHONE

ORDER TAKEN BY

TERMS:

DESCRIPTION OF WORK	AMOUNT
BONNI / TONY	
Drove in to wash received new light tower	
masking for pipe and started work and picked	
up fittings returned back to homebase $62.95	10 HRS

LABOR	HOURS	RATE	AMOUNT	TOTAL MATERIAL	
				TOTAL LABOR	
WORK ORDERED BY		DATE COMPLETED		TAX	
SIGNATURE (I hereby acknowledge the satisfactory completion of the above described work.)				Thank You! PAY THIS AMOUNT →	

QTY.	MATERIAL	PRICE	AMOUNT

ENTERED

Industrial Age Contractors, Inc.
P.O. Box 101133
Fort Worth, TX.76185

(817) 927-2900
FAX (817) 926-4908

INVOICE NO.

JOB PHONE	DATE OF ORDER
	6/20/02
JOB NAME/LOCATION	
# 168	THURS

TO: SAFETY KLEEN
LAS VAGIS

PHONE

ORDER TAKEN BY

TERMS:

DESCRIPTION OF WORK	AMOUNT
RONNIE/TONY	
pull pipe from VMS tank to tank Box run some	
two inch pipe went to Branch and picked up	
Back flow and filter. That go in front of	
105 and 150 pumps went and got more flanges	
and three inch pipe	10 HRS

LABOR	HOURS	RATE	AMOUNT		
				TOTAL MATERIAL	
				TOTAL LABOR	

WORK ORDERED BY

DATE COMPLETED

TAX

SIGNATURE (I hereby acknowledge the satisfactory completion of the above described work.)

Thank You!

PAY THIS AMOUNT →

QTY.	MATERIAL	PRICE	AMOUNT

ENTERED

Industrial Age Contractors, Inc.
P.O. Box 101133
Fort Worth, TX.76185

(817) 927-2900
FAX (817) 926-4908

INVOICE NO.

JOB PHONE	DATE OF ORDER
	6/21/02
JOB NAME/LOCATION	
#168	FRid

TO: SAFETY KLEEN
LAS VAGIS

PHONE

ORDER TAKEN BY

TERMS:

DESCRIPTION OF WORK	AMOUNT
RONNIE/TONY	
ran three inch pipe from top of tanks	
to amber box went to home depot and got	
some two inch pipe nipples and a new	
1/2 inch drill motor at the drill broke	10HRS

LABOR	HOURS	RATE	AMOUNT	TOTAL MATERIAL	
				TOTAL LABOR	
WORK ORDERED BY		DATE COMPLETED		TAX	
SIGNATURE (I hereby acknowledge the satisfactory completion of the above described work.)				Thank You! PAY THIS AMOUNT →	

QTY.	MATERIAL	PRICE	AMOUNT
	HOMEDEPOT	$84.59	

ENTERED

Industrial Age Contractors, Inc.
P.O. Box 101133
Fort Worth, TX.76185

(817) 927-2900
FAX (817) 926-4908

INVOICE NO.

JOB PHONE	DATE OF ORDER
	6/22/02
JOB NAME/LOCATION	
# 168	SAT

TO: SAFETY KLEEN
LAS VAGIS

PHONE

ORDER TAKEN BY

TERMS:

DESCRIPTION OF WORK	AMOUNT
RONNIE/TONY	
CUT and welded pipe	10 HRS

LABOR	HOURS	RATE	AMOUNT

TOTAL MATERIAL	
TOTAL LABOR	
TAX	
PAY THIS AMOUNT →	

WORK ORDERED BY

DATE COMPLETED

SIGNATURE (I hereby acknowledge the satisfactory completion of the above described work.)

Thank You!

QTY.	MATERIAL	PRICE	AMOUNT

ENTERED

Industrial Age Contractors, Inc.
P.O. Box 101133
Fort Worth, TX.76185

(817) 927-2900
FAX (817) 926-4908

INVOICE NO.

JOB PHONE	DATE OF ORDER
	6/23/02
JOB NAME/LOCATION	
# 168	SUN

TO: SAFETY KLEEN
LAS VEGAS

PHONE

ORDER TAKEN BY

TERMS:

DESCRIPTION OF WORK	AMOUNT
RONNIE/TONY	
cut and lift pipe and welded	10 HRS

LABOR	HOURS	RATE	AMOUNT	TOTAL MATERIAL	
				TOTAL LABOR	
WORK ORDERED BY		DATE COMPLETED		TAX	
SIGNATURE (I hereby acknowledge the satisfactory completion of the above described work.)				Thank You! PAY THIS AMOUNT →	

QTY.	MATERIAL	PRICE	AMOUNT
	RPRIME PIPE SUPPLIES	$230.90	

ENTERED

Industrial Age Contractors, Inc.
P.O. Box 101133
Fort Worth, TX 76185

(817) 927-2900
FAX (817) 926-4908

INVOICE NO.

JOB PHONE	DATE OF ORDER
	6/24/02
JOB NAME/LOCATION	
#168	MON

TO: SAFETY KLEEN
LAS VAGIS

PHONE

ORDER TAKEN BY

TERMS:

DESCRIPTION OF WORK	AMOUNT
RONNIE / TONY	
finished flush and welding four inch pipe and work off picket of supplies to finish all piping	10 HRS

LABOR	HOURS	RATE	AMOUNT	
				TOTAL MATERIAL
				TOTAL LABOR

WORK ORDERED BY:

DATE COMPLETED

TAX

SIGNATURE (I hereby acknowledge the satisfactory completion of the above described work.)

Thank You!
PAY THIS AMOUNT →

QTY.	MATERIAL	PRICE	AMOUNT

ENTERED

Industrial Age Contractors, Inc.
P.O. Box 101133
Fort Worth, TX.76185

(817) 927-2900
FAX (817) 926-4908

INVOICE NO.

JOB PHONE	DATE OF ORDER
	6/25/02
JOB NAME/LOCATION	
# 168	TVS

TO: SAFETY KLEEN
LAS VAGIS

PHONE

ORDER TAKEN BY

TERMS

DESCRIPTION OF WORK	AMOUNT
RONNIE/TONY	
weld pipe put gasket in all flanges paint	
dirty solvent line ground out cracks in	
drum storage area and put down absorbent	
tape	10 HRS

LABOR	HOURS	RATE	AMOUNT	TOTAL MATERIAL	
				TOTAL LABOR	
WORK ORDERED BY		DATE COMPLETED		TAX	
SIGNATURE (I hereby acknowledge the satisfactory completion of the items described work.)				Thank You! PAY THIS AMOUNT →	

QTY.	MATERIAL	PRICE	AMOUNT

Industrial Age Contractors, Inc.
P.O. Box 101133
Fort Worth, TX.76185

(817) 927-2900
FAX (817) 926-4908

ENTERED

INVOICE NO.

JOB PHONE	DATE OF ORDER
	5/22/02
JOB NAME/LOCATION	
#213	WEL

TO: SAFETY KLEEN
LAS VAGIS

PHONE

ORDER TAKEN BY

TERMS:

DESCRIPTION OF WORK	AMOUNT
RONNIE/TONY	
Dem some of the plumbing make stands to hold up filter port	7 HRS

LABOR	HOURS	RATE	AMOUNT		
				TOTAL MATERIAL	
				TOTAL LABOR	
WORK ORDERED BY		DATE COMPLETED		TAX	
SIGNATURE (I hereby acknowledge the satisfactory completion of the above described work.)				Thank You! PAY THIS AMOUNT →	

QTY.	MATERIAL	PRICE	AMOUNT

Industrial Age Contractors, Inc.
P.O. Box 101133
Fort Worth, TX 76185

(817) 927-2900
FAX (817) 926-4908

INVOICE NO.

JOB PHONE	DATE OF ORDER
	5/23/02
JOB NAME/LOCATION	
#213	THUR

TO: SAFETY KLEEN
LAS VAGIS

ENTERED

PHONE

ORDER TAKEN BY

TERMS:

DESCRIPTION OF WORK	AMOUNT
RONNIE/TONY	
replaced Dock logs put in Bargrate	
went to Branch and picked up Green posts	
put out side walls and trim on top of walls	10 HRS

LABOR	HOURS	RATE	AMOUNT	TOTAL MATERIAL	
				TOTAL LABOR	
WORK ORDERED BY		DATE COMPLETED		TAX	
SIGNATURE (I hereby acknowledge the satisfactory completion of the above described work.)				Thank You! PAY THIS AMOUNT →	

QTY.	MATERIAL	PRICE	AMOUNT
	HOME DEPOT 1" BLACK PIPE		
	AND FITTING	$136.03	
	WALL MART SHOPVAC	$ 59.19	

ENTERED

Industrial Age Contractors, Inc.
P.O. Box 101133
Fort Worth, TX.76185

(817) 927-2900
FAX (817) 926-4908

INVOICE NO.

JOB PHONE	DATE OF ORDER
	5/25/02
JOB NAME/LOCATION	
#213	SAT

TO: SAFETY/KLEEN
LAS VAGAS

PHONE

ORDER TAKEN BY

TERMS:

DESCRIPTION OF WORK	AMOUNT
RONNIE/TONY	
made and put in angle iron in front of	
pass wooded door and timber pad	
so we can put air tank on them	
went and got supplies to pipe air	
compressor in and got shop vac	10 HRS

LABOR	HOURS	RATE	AMOUNT	TOTAL MATERIAL	
				TOTAL LABOR	
WORK ORDERED BY		DATE COMPLETED		TAX	
SIGNATURE (I hereby acknowledge the satisfactory completion of the above described work.)				*Thank You!* PAY THIS AMOUNT →	

QTY.	MATERIAL	PRICE	AMOUNT
	HOME DEPOT	$21.44	

ENTERED

Industrial Age Contractors, Inc.
P.O. Box 101133
Fort Worth, TX.76185

(817) 927-2900
FAX (817) 926-4908

INVOICE NO.

JOB PHONE	DATE OF ORDER
	5/26/02
JOB NAME/LOCATION	
#213	SUN

TO: SAFETY/KLEEN
LAS VAGAS

PHONE

ORDER TAKEN BY

TERMS:

DESCRIPTION OF WORK	AMOUNT
RONNIE/TONY	
cleaned out sump in tanker pad and sealed	
and acid washed tanker pad	
spent five hours on building frame	
and painting it and anchoring it to the wall	10 HRS

LABOR	HOURS	RATE	AMOUNT		
				TOTAL MATERIAL	
				TOTAL LABOR	
WORK ORDERED BY		DATE COMPLETED		TAX	
SIGNATURE (I hereby acknowledge the satisfactory completion of the above described work.)				Thank You! PAY THIS AMOUNT →	

QTY.	MATERIAL	PRICE	AMOUNT
	HOME DEPOT air comp air	$53.00	

Industrial Age Contractors, Inc.
P.O. Box 101133
Fort Worth, TX 76185

(817) 927-2900
FAX (817) 926-4908

INVOICE NO.

JOB PHONE	DATE OF ORDER
	5/27/02
JOB NAME/LOCATION	
#213	CON

TO: SAFETY KLEEN
LAS VAGIS

ENTERED

PHONE

ORDER TAKEN BY

TERMS:

DESCRIPTION OF WORK	AMOUNT
RONNIE/TONY	
cut and welded stand for pipe rack	
Built shed around air compressor put	
some sealer on floor unit and set	
supplies	10 HRS

LABOR	HOURS	RATE	AMOUNT	TOTAL MATERIAL	
				TOTAL LABOR	
WORK ORDERED BY		DATE COMPLETED		TAX	
SIGNATURE (I hereby acknowledge the satisfactory completion of the above described work)				Thank You! PAY THIS AMOUNT →	

QTY.	MATERIAL	PRICE	AMOUNT	

Industrial Age Contractors, Inc.
P.O. Box 101133
Fort Worth, TX 76185

(817) 927-2900
FAX (817) 926-4908

INVOICE NO.

JOB PHONE	DATE OF ORDER
	6/2/02
JOB NAME/LOCATION	
#213	
	SUN

TO: SAFETY KLEEN ~~LAS VEGAS~~
LAS VEGAS 6/10

PHONE

ORDER TAKEN BY

TERMS:

DESCRIPTION OF WORK	AMOUNT
RONNIE/TONY	
fixed and starting door rollers on new builds	
put all new supplies on welder tools measure	
on tones for pipes put new rod and holders on	
doors on drums washers builders	8½ HRS

LABOR	HOURS	RATE	AMOUNT	TOTAL MATERIAL	
				TOTAL LABOR	
WORK ORDERED BY		DATE COMPLETED		TAX	
SIGNATURE (I hereby acknowledge the satisfactory completion of the above described work.)				*Thank You!* PAY THIS AMOUNT →	

QTY.	MATERIAL	PRICE	AMOUNT
	PIPE AND ANGLE IRON	$49.96	
	ICE AND WATER	$2.98	

Industrial Rage Contractors, Inc.
P.O. Box 101133
Fort Worth, TX.76185

(817) 927-2900
FAX (817) 926-4908

INVOICE NO.

JOB PHONE

DATE OF ORDER 5/24/02

JOB NAME/LOCATION #213 FRY

ENTERED

TO: SAFETY/KLEEN
LAS VAGIS

PHONE

ORDER TAKEN BY

TERMS

DESCRIPTION OF WORK	AMOUNT
RONNIE/TONY. installed air compressor finished Teagrate installed angle iron in front of back door went and picked up pipe for tanks and drove washers put in new tanks	10½ HRS

LABOR	HOURS	RATE	AMOUNT	
				TOTAL MATERIAL
				TOTAL LABOR

WORK ORDERED BY

DATE COMPLETED

TAX

SIGNATURE (I hereby acknowledge the satisfactory completion of the above described work.)

Thank You!
PAY THIS AMOUNT →

QTY.	MATERIAL	PRICE	AMOUNT
	AUTO ZONE BATTERY	$ 26.50	

Industrial Age Contractors, Inc.
P.O. Box 101133
Fort Worth, TX.76185

(817) 927-2900
FAX (817) 926-4908

INVOICE NO.

JOB PHONE	DATE OF ORDER
	6/1/02
JOB NAME/LOCATION	
#213	SAT

TO: SAFETY KLEEN ENFIELD
LAS VAGIS 6/10

PHONE

ORDER TAKEN BY

TERMS:

DESCRIPTION OF WORK	AMOUNT
RONNIE/TONY	
put overhead door covers on ambered step's to slab cut to fit and welded threaded pice to pipe and installed in toolbox put tee in air line by air compressor	
straitened plum sliding doors on drum washer shed	10 HRS

LABOR	HOURS	RATE	AMOUNT		
				TOTAL MATERIAL	
				TOTAL LABOR	

WORK ORDERED BY

DATE COMPLETED

TAX

SIGNATURE (I hereby acknowledge the satisfactory completion of the above described work.)

Thank You!
PAY THIS AMOUNT →

QTY.	MATERIAL	PRICE	AMOUNT
	ICE AND WATER	$5.63	
	P.O. 213-KS	$318.71	
	MAP	7.45	

Industrial Age Contractors, Inc.
P.O. Box 101133
Fort Worth, TX.76185

(817) 927-2900
FAX (817) 926-4908

INVOICE NO.

JOB PHONE

DATE OF ORDER 6/3/02

JOB NAME/LOCATION #213 MON

ENTERED 6/10

TO: SAFETY KLEEN
LAS VEGAS

PHONE

ORDER TAKEN BY

TERMS

DESCRIPTION OF WORK	AMOUNT
RONNIE/TONY	
Painted door face on drum washer building	
Finished ceiling floor and ramps	
went and picked up pay for Tonkon dog	
went and picked up some of the pipe fittings	
helped electricians for a little bit	10 HRS

LABOR	HOURS	RATE	AMOUNT	TOTAL MATERIAL	
				TOTAL LABOR	
WORK ORDERED BY		DATE COMPLETED		TAX	
SIGNATURE (I hereby acknowledge the satisfactory completion of the above described work.)				Thank You! PAY THIS AMOUNT →	

QTY.	MATERIAL	PRICE	AMOUNT
	ICE WATER	$407	

Industrial Age Contractors, Inc.
P.O. Box 101133
Fort Worth, TX.76185

(817) 927-2900
FAX (817) 926-4908

INVOICE NO.

JOB PHONE	DATE OF ORDER
	5/28/02
JOB NAME/LOCATION	
#213	TUB

TO: SAFETY KLEEN
LAS VEGAS

ENTERED

PHONE

ORDER TAKEN BY

TERMS:

DESCRIPTION OF WORK	AMOUNT
RONNIE / TONY	
cut in air line put scaffolding on floor	
built stand for conduit piping	
put scaffolding on one of the ramps also	

LABOR	HOURS	RATE	AMOUNT		
				TOTAL MATERIAL	
				TOTAL LABOR	
WORK ORDERED BY		DATE COMPLETED		TAX	
SIGNATURE (I hereby acknowledge the satisfactory completion of the above described work)				Thank You! PAY THIS AMOUNT →	

QTY.	MATERIAL	PRICE	AMOUNT

Industrial Age Contractors, Inc.
P.O. Box 101133
Fort Worth, TX.76185

(817) 927-2900
FAX (817) 926-4908

INVOICE NO.

JOB PHONE	DATE OF ORDER
	6/4/02
JOB NAME/LOCATION	
#213	TVS

ENTERED 6/10

TO: SAFETY KLEEN
LAS VEGIS

PHONE

ORDER TAKEN BY

TERMS:

DESCRIPTION OF WORK	AMOUNT
BONNIE/TONY	
installed winters on tanks and three plugs	
took outcope off of existing units cut and	
welded two inch pipe for deck 105 and 150 solvent	
lines installed new VMS pump units to Branch	
and picked up supplies mounted Brackets on	
105 and 150 solvent pumps and set in place	

LABOR	HOURS	RATE	AMOUNT	TOTAL MATERIAL	
				TOTAL LABOR	
WORK ORDERED BY		DATE COMPLETED		TAX	
SIGNATURE (I hereby acknowledge the satisfactory completion of the above described work)				Thank You! PAY THIS AMOUNT →	

QTY.	MATERIAL	PRICE	AMOUNT
	home depot	$17.32	
	water	$ 4.04	
	auto zone	$ 1.71	

Industrial Age Contractors, Inc.
P.O. Box 101133
Fort Worth, TX.76185

(817) 927-2900
FAX (817) 926-4908

INVOICE NO.

JOB PHONE

DATE OF ORDER 5/31/02

JOB NAME/LOCATION #213 FRIDAY

TO: SAFETY KLEEN 6/10
LAS VAGIS

PHONE

ORDER TAKEN BY

TERMS:

DESCRIPTION OF WORK	AMOUNT
RONNIE/TONY	
helped electrician mount panels on wall put up cope on builder built angle iron frames for clean solvent pumps went to pipefitter place got price on filter went to honda place bought gas cap spark plug air filter and fuse for welder went to home depot and got supplies to fix doors	12 HRS

LABOR	HOURS	RATE	AMOUNT	TOTAL MATERIAL	
				TOTAL LABOR	

WORK ORDERED BY

DATE COMPLETED

TAX

SIGNATURE (I hereby acknowledge the satisfactory completion of the above described work.)

Thank You!
PAY THIS AMOUNT →

QTY.	MATERIAL	PRICE	AMOUNT
	ice	$ 2.58	
	metal framing	$107.55	

Industrial Age Contractors, Inc.
P.O. Box 101133
Fort Worth, TX.76185

(817) 927-2900
FAX (817) 926-4908

INVOICE NO.

JOB PHONE

DATE OF ORDER: 5/30/02

JOB NAME/LOCATION: #213 THU

ENGRAV 6/10

TO: [redacted] SAFTY KLEEN

LAS VAGIS

PHONE

ORDER TAKEN BY

TERMS:

DESCRIPTION OF WORK	AMOUNT
RONNIE/TONY	
loaded Doors on Drumwashers installed	
weather shields in front of Drumwasher	
put control panel on wall went over	
piping for tanks went and order pipe	
fitters	10 HRS

LABOR	HOURS	RATE	AMOUNT		
				TOTAL MATERIAL	
				TOTAL LABOR	
				TAX	

WORK ORDERED BY

DATE COMPLETED

SIGNATURE: (I hereby acknowledge the satisfactory completion of the above described work.)

Thank You!

PAY THIS AMOUNT →

QTY.	MATERIAL	PRICE	AMOUNT
	home depot	$ 37.58	

Industrial Age Contractors, Inc.
P.O. Box 101133
Fort Worth, TX.76185

(817) 927-2900
FAX (817) 926-4908

INVOICE NO.

JOB PHONE	DATE OF ORDER
	5/29/02
JOB NAME/LOCATION	
#213	WEN

TO: SAFTY KLEEN
LAS VAGIS

6/10

PHONE

ORDER TAKEN BY

TERMS:

DESCRIPTION OF WORK	AMOUNT
RONNIE/TONY	
piped oil/water separator in on air line ground dock legs and welded the dock to gether put sewer on Trans ramp put door on drum washer builder put on weather shield and dock plate on	10 HRS

LABOR	HOURS	RATE	AMOUNT

TOTAL MATERIAL	
TOTAL LABOR	
TAX	
PAY THIS AMOUNT →	

WORK ORDERED BY

DATE COMPLETED

SIGNATURE (I hereby acknowledge the satisfactory completion of the above described work.)

Thank You!

Y.	MATERIAL	PRICE	AMOUNT

Industrial Age Contractors, Inc.
P.O. Box 101133
Fort Worth, TX.76185

ENTERED

(817) 927-4908
FAX (817) 926-4908

INVOICE NO.

JOB PHONE	DATE OF ORDER
	7/30/02
JOB NAME/LOCATION	
168	TUE

TO: SAFETY KLEEN

PHONE

ORDER TAKEN BY

TERMS

DESCRIPTION OF WORK	AMOUNT
RONNIE/TONY	
went over today with Jim prosenchki	
went and picked up pipe fittings put together.	
went to base depot and got material to put	
on walls around fence [redacted] are complete	10 HRS

LABOR	HOURS	RATE	AMOUNT	TOTAL MATERIAL	
				TOTAL LABOR	
WORK CHARGED BY		DATE COMPLETED		TAX	
[illegible]				Thank You!	

QTY.	MATERIAL	PRICE	AMOUNT

INVOICE NO.

Industrial Age Contractors, Inc.
P.O. Box 101133
Fort Worth, TX.76185

(817) 927-2908
FAX (817) 926-4908

JOB FINISH	DATE OF ORDER
	7/31/02
JOB NAME/LOCATION	
168	WEN

ENTERED

TO: SAFETY KLEEN
LAS VAGIS

PHONE

ORDER TAKEN BY

TERMS

DESCRIPTION OF WORK	AMOUNT
RONNIE/TONY	
put to work cage finished piping and take	
lifted excavators want out get Blind	1
flange	12 HRS

LABOR	HOURS	RATE	AMOUNT

TOTAL MATERIAL	
TOTAL LABOR	
TAX	
PAY THIS AMOUNT →	

WORK CONFIRMED BY

DATE COMPLETED

SIGNATURE (I hereby acknowledge the satisfactory completion of the above described work)

Thank You!

QTY.	MATERIAL	PRICE	AMOUNT

Industrial Age Contractors, Inc.
P.O. Box 101133
Fort Worth, TX 76185

(817) 927-2900
FAX (817) 926-4908

INVOICE NO.

JOB PHONE
DATE ORDERED 8/2/02
JOB NAME/LOCATION 168 THUR

ENTERED

TO: SAFETY KLEEN
LAS VAGIS

PHONE
ORDER TAKEN BY

TERMS

DESCRIPTION OF WORK	AMOUNT
RONNIE/TONY	
run conduit and phone line for alarm system	
under concrete back under garage	
behind electricians	2 HRS
went and checked out dirty solvent pump	
at old Branch it was bad	1½ HRS

LABOR	HOURS	RATE	AMOUNT

TOTAL MATERIAL	
TOTAL LABOR	
TAX	
PAY THIS AMOUNT →	

WORK ORDERED BY
DATE COMPLETED
SIGNATURE (I hereby acknowledge the satisfactory completion of the above mentioned work)

Thank You!

QTY.	MATERIAL	PRICE	AMOUNT

INVOICE NO.

Industrial Age Contractors, Inc.
P.O. Box 101133
Fort Worth, TX 76185

(817) 927-2900
FAX (817) 926-4908

JOB PHONE

DATE OF ORDER: 8/4/02

JOB NAME/LOCATION: 169 SVN

TO: SAFETY KLEEN
Box [illegible]

ENTERED

PHONE

ORDERED BY/AUTHORITY

TERMS:

DESCRIPTION OF WORK	AMOUNT
RONNIE/TONY	
Drive in to box [illegible]	5 HRS
work on Brush put in line switch plugged	
off of float switch on Right hand drum	
under fire tube leak in air line put sprocket	
back on motor in drum washer and chain and	
tighten and re align brush frame	5 HRS

LABOR	HOURS	RATE	AMOUNT

WORK ORDERED BY

DATE COMPLETED

SIGNATURE (I hereby acknowledge the satisfactory completion of the above described work)

TOTAL MATERIAL	
TOTAL LABOR	
TAX	
Thank You! PAY THIS AMOUNT →	

QTY.	MATERIAL	PRICE	AMOUNT

Industrial Age Contractors, Inc.
P.O. Box 101133
Fort Worth, TX 76185

(817) 927-2900
FAX (817) 926-4908

INVOICE NO.

JOB PHONE

DATE OF ORDER: 8/5/02

JOB NAME/LOCATION: 168 PAN

TO: SAFETY KLEEN
LAS VEGAS

ORDER TAKEN BY

TERMS

DESCRIPTION OF WORK	AMOUNT
RONNIE/TONY Build brackets to mount softer on front of drum washer builder want to plumb to sep out Broken fan want to have Depot picked up supplies and conduit	9 HRS

ENTERED

LABOR	HOURS	RATE	AMOUNT

TOTAL MATERIAL	
TOTAL LABOR	
TAX	
Thank You! PAY THIS AMOUNT →	

WORK ORDERED BY

DATE COMPLETED

SIGNATURE (I hereby acknowledge the satisfactory completion of the above (completed work))

QTY.	MATERIAL	PRICE	AMOUNT

ENTERED

Industrial Age Contractors, Inc.
P.O. Box 101133
Fort Worth, TX 76185

(817) 927-2900
FAX (817) 926-4908

INVOICE NO.

JOB PHONE | DATE OF ORDER: 8/6/02
JOB NAME/LOCATION: LAS | TUS

TO: SAFETY KLEEN
LAS VEGAS

AMOUNT
ORDER TAKEN BY
TERMS

DESCRIPTION OF WORK	AMOUNT
RONNIE / TONY	
went to garage and got fan parts and threw away	
Boys to install fans welded angle	
iron under box grate	9 HRS
Drive to closure	2 HRS

LABOR	HOURS	RATE	AMOUNT	
				TOTAL MATERIAL
				TOTAL LABOR

WORK ORDERED BY | DATE COMPLETED

TAX

SIGNATURE (I hereby acknowledge the satisfactory completion of the above described work.)

Thank You!
PAY THIS AMOUNT →

QTY.	MATERIAL	PRICE	AMOUNT

Industrial Edge Contractors, Inc.
P.O. Box 101133
Fort Worth, TX.76185

(817) 927-2900
FAX (817) 926-4908

INVOICE NO.

JOB PHONE	DATE OF ORDER
	6/13/02
JOB NAME/LOCATION #213	THURS

TO: SAFTEY KLEEN
LAS VAGIS

PHONE

ORDER TAKEN BY

TERMS:

DESCRIPTION OF WORK	AMOUNT
RONNIE/TONY	
took grinder and cleaned out cracks in	
warehouse floor	3 HRS
drive to Clackamas oregon	7 HRS.
DID NOT charge 3 HRS	

LABOR	HOURS	RATE	AMOUNT	TOTAL MATERIAL	
				TOTAL LABOR	
WORK ORDERED BY		DATE COMPLETED		TAX	
SIGNATURE (I hereby acknowledge the satisfactory completion of the above described work.)				Thank You! PAY THIS AMOUNT →	

QTY.	MATERIAL	PRICE	AMOUNT

Industrial Age Contractors, Inc.
P.O. Box 101133
Fort Worth, TX 76185

(817) 927-2900
FAX (817) 926-4908

INVOICE NO.

JOB PHONE	DATE OF ORDER
	6/26/02
JOB NAME/LOCATION	
#168	DEN

TO: SAFETY KLEEN
LAS VEGAS

PHONE

ORDER TAKEN BY

TERMS:

DESCRIPTION OF WORK	AMOUNT
RONNIE/TONY	
assist Crocker in floor 5 HRS	
finished welding on three inch pipe	
welded brackets to hold three inch pipe	
put some tagger on under deck	12½ HRS
	TOTAL

LABOR	HOURS	RATE	AMOUNT	
				TOTAL MATERIAL
				TOTAL LABOR
WORK ORDERED BY		DATE COMPLETED		TAX
SIGNATURE (I hereby acknowledge the satisfactory completion of the above described work.)				Thank You! PAY THIS AMOUNT →

QTY.	MATERIAL	PRICE	AMOUNT	

Industrial Cage Contractors, Inc.
P.O. Box 101133
Fort Worth, TX 76185

(817) 927-2900
FAX (817) 926-4908

INVOICE NO.

JOB PHONE	DATE OF ORDER
	6/27/02
JOB NAME/LOCATION	
#168	THU

TO: SAFETY KLEEN
LAS VEGAS

PHONE

ORDER TAKEN BY

TERMS:

DESCRIPTION OF WORK	AMOUNT
RONNIE / TONY	
put bags in wall blocks cover floor and around walls	12 HRS

LABOR	HOURS	RATE	AMOUNT	

TOTAL MATERIAL	
TOTAL LABOR	
TAX	
PAY THIS AMOUNT →	

WORK ORDERED BY

DATE COMPLETED

SIGNATURE (I hereby acknowledge the satisfactory completion of the above described work.)

Thank You!

QTY.	MATERIAL	PRICE	AMOUNT

Industrial Age Contractors, Inc.
P.O. Box 101133
Fort Worth, TX.76185

(817) 927-2900
FAX (817) 926-4908

INVOICE NO.

JOB PHONE	DATE OF ORDER
	6/29/02
JOB NAME/LOCATION	
#168	SAT

TO: SAFETY KLEEN
LAS VAGIS

PHONE

ORDER TAKEN BY

TERMS:

DESCRIPTION OF WORK	AMOUNT
RONNIE ITONY	
DRIVE HOME	10 HRS

LABOR	HOURS	RATE	AMOUNT	
				TOTAL MATERIAL
				TOTAL LABOR

WORK ORDERED BY

DATE COMPLETED

TAX

SIGNATURE (I hereby acknowledge the satisfactory completion of the above described work.)

Thank You!

PAY THIS AMOUNT →

QTY.	MATERIAL	PRICE	AMOUNT

Industrial Age Contractors, Inc.
P.O. Box 101133
Fort Worth, TX.76185

(817) 927-2900
FAX (817) 926-4908

INVOICE NO.

JOB PHONE	DATE OF ORDER
	6/28/02
JOB NAME/LOCATION	
#168	FRi

TO: SAFETY KLEEN
LAS VAGiS

PHONE

ORDER TAKEN BY

TERMS:

DESCRIPTION OF WORK	AMOUNT
RONNIE/TONY	
clean up all around Builder inside and out load up all pipe and fittings	5½
~~[illegible]~~ DRIVE HOME	4½

LABOR	HOURS	RATE	AMOUNT	TOTAL MATERIAL	
				TOTAL LABOR	
WORK ORDERED BY		DATE COMPLETED		TAX	
SIGNATURE (I hereby acknowledge the satisfactory completion of the above described work.)				Thank You! PAY THIS AMOUNT →	

QTY.	MATERIAL	PRICE	AMOUNT

Industrial Age Contractors, Inc.
P.O. Box 101133
Fort Worth, TX.76185

(817) 927-2900
FAX (817) 926-4908

INVOICE No.

JOB PHONE	DATE OF ORDER
	6/30/02
JOB NAME/LOCATION	
#168	SUN

TO: SAFETY KLEEN
LAS VAGIS

PHONE

ORDER TAKEN BY

TERMS:

DESCRIPTION OF WORK	AMOUNT
RONNIE/TONY	
DRIVE HOME	10 HRS

LABOR	HOURS	RATE	AMOUNT		
				TOTAL MATERIAL	
				TOTAL LABOR	
				TAX	
				Thank You! PAY THIS AMOUNT →	

WORK ORDERED BY

DATE COMPLETED

SIGNATURE (I hereby acknowledge the satisfactory completion of the above described work.)

EXHIBIT E-4

SEIZMIC EVALUATION

GES
GEOTECHNICAL & ENVIRONMENTAL SERVICES, INC.

PROVIDING
- Geotechnical Engineering
- Construction Materials Testing
- Environmental Site Assessments
- Drilling Services

December 4, 2000
Project No. 20001098E1

Mr. David Huntsman
Safety-Kleen Systems, Inc.
1655 Stocker Street
North Las Vegas, Nevada 89030

RE: Seismic Study for the Part B Permit – Geologic Fault Evaluation – 40 C.F.R. 270.14, Section 11, Subpart (ii), Proposed Safety Kleen Facility (Assessors Parcel Number {APN} 139-01-611-005). Located on the East Side of Donovan Way, approximately 1200 feet north of the intersection of Craig Road and Donovan Way, North Las Vegas, Nevada.

Dear Mr. Huntsman:

In response to your request, Geotechnical & Environmental Services, Inc. (GES) has performed a Geologic Fault Evaluation for the above referenced project site which is located on the east side of Donovan Way, approximately 1200 feet north of the intersection of Craig Road and Donovan Way, North Las Vegas, Nevada. The following sections of the report details the requirements as set forth by 40 C.F.R. 270.14 (Section 11, Subpart ii), summarizes the results of the literature search, field work including site and area reconnaissance, our findings, and a fault proximity map for the site.

40 C.F.R. 270.14 – Section 11, Subpart (ii)

This section of the Code of Federal Regulations details facility location information. Specifically, the applicability of seismic standards as related to facility siting, as excerpted below, Subpart (ii) states the following:

> ***"If the facility is proposed to be located in an area listed in appendix VI of part 264, the owner or operator shall demonstrate compliance with the seismic standard. This demonstration may be made using either published geologic data or data obtained from field investigations carried out by the applicant. The information provided must be of such quality to be acceptable to geologists experienced in identifying and evaluating seismic activity. The information submitted must show that either:***

7560 W. Sahara Ave., Suite 101 Las Vegas, NV 89117
(702) 365-1001 • Fax (702) 341-7120
www.gesnevada.com

A. No faults which have had displacement in Holocene time are present, or no lineations which suggest the presence of a fault (which have displacement in Holocene time) within 3,000 feet of a facility are present, based on data from:

1) Published geologic studies,
2) Aerial reconnaissance of the area within a five-mile radius from the facility.
3) An analysis of aerial photographs covering a 3,000 foot radius of the facility, and
4) If needed to clarify the above data, a reconnaissance based on walking portions of the area within 3,000 feet of the facility, or

B. If faults (to include lineations) which have had displacement in Holocene time are present within 3,000 feet of a facility, no faults pass within 200 feet of the portions of the facility where treatment, storage, or disposal of hazardous waste will be conducted, based on data obtained from a comprehensive geologic analysis of the site. Unless a site analysis is otherwise conclusive concerning the absence of faults within 200 feet of such portions of the facility, data shall be obtained from a subsurface exploration (trenching) of the area within 200 feet from the portions of the facility where treatment, storage, or disposal of hazardous waste will be conducted. Such trenching shall be performed in a direction that is perpendicular to known faults (which have had displacement in Holocene time) passing within 3,000 feet of the portions of the facility where treatment, storage, or disposal of hazardous waste will be conducted. Such investigation shall document with supporting maps and other analyses, the location of faults found."

Mapped Faults

To comply with the above guidelines, a thorough review of published geologic data was undertaken to evaluate the potential for a fault to be located within 3,000 feet of the proposed facility location. Two sources of mapped fault information were found to contain data applicable to the requirements of the study.

The Nevada Bureau of Mines and Geology study which was prepared in cooperation with the Las Vegas Valley Water District map titled "Plate 1, **MAP OF FAULTS AND EARTH FISSURES IN THE LAS VEGAS AREA (C.M. dePolo and John W. Bell) 2000.** This map is a comprehensive map of the Las Vegas area, which details Quaternary Faults (from Bell and Price, 1991), earth fissures and sinkholes inventoried in 1988, overall outlines of fissure areas, areas of swarms of fissures and sinkholes, and previously mapped earth fissures (by Mifflin et al. (1991), and Converse Consultants (1996) in the Windsor Park area, and Kleinfelder (1997) in the Nellis Well Field area, and

The CLARK COUNTY SOIL GUIDELINES MAP. This map was compiled by the Clark County Building Department personnel, the Nevada Bureau of Mines and Geology, and created by the Clark County Building Department using the following references:

Las Vegas Subsidence Report compiled by the Nevada Bureau of Mines and Geology, June 1991;
USGS and Regional Flood Control District References

The revision date on this map was May 1, 1998. This map details the soil hazards in the Clark County area, along with mapping of Faults, Inferred Faults, and Concealed Faults in the Clark County area.

In addition to published maps, a document review was undertaken to provide a correlation of the faults in the vicinity of the site. One report was located that provided information regarding faults and or fissures in the vicinity of the proposed site. These reports were both published by the Nevada Bureau of Mines and Geology (NBMG) and are as follows:

Mifflin, M.B., Adene, O.A., and Johnson, R.J., 1991, Earth Fissures in Las Vegas Valley, and Bell, J.W., and Price, J.G., 1991, Subsidence in the Las Vegas Valley, 1980-1991:NBMG Open-File Report 93-4.

Review of all readily available fault studies from the Holocene Epoch, or more recent, indicates one pair of faults in the general area of the site. These two (2) faults are both classified as Quaternary in age (last 1 million years before present (MYBP)), and are located approximately 4,150 feet to the southeast of the subject site (See Figure 1). Distance measurements were obtained by using Global Positioning System (GPS), Standard Positioning Service (SPS)[1] locating the perimeter of the proposed site and overlaying the site location on the scanned georeferenced[2] fault area. Distances to all faults in the general vicinity were obtained using ERSI's ARCView Geographic Information System (G.I.S.) program. The faults are northeast by southwest trending and nearly parallel, with only the very northerly sections of their extent not obscured by an existing residential development.

---

[1] *The **Standard Positioning Service (SPS)** is a positioning and timing service available to all GPS users on a continuous, worldwide basis with no direct charge. SPS will be provided on the GPS L1 frequency, which contains a **coarse acquisition** (C/A) code and a navigation data message. SPS provides a predictable positioning accuracy of 100 meters (95 percent) horizontally and 156 meters (95 percent) vertically and time transfer accuracy to UTC within 340 nanoseconds (95 percent).*

[2] *Georeferencing is the process of applying a latitude and longitude to a scanned raster image to arrive at a vector based image which can be digitally analyzed using commercial GIS software.*

Field Investigation

The approximate locations of the faults were evaluated through a combination of reviews of aerial photographs, geologic maps, fault/fissure maps, topographic maps, and site reconnaissance. During our review of available fault/fissure maps, it was observed that only 2 mapped faults were even remotely close to the site. A review of topographic and geologic maps, as well as aerial photographs indicated no other evidence of other faults. A field investigation of the published fault locations indicate that only the most northerly sections of the faults were exposed, with the remainder located under a predominately older residential development (See Figure 2). A detailed walk over of the mapped area of the faults, indicated no surface expressions from the faults in the vacant field immediately northeast of the residential development.

Findings and Conclusions

Based on a review of information obtained from available literature and maps, and in conjunction with the requirements established in 40 C.F.R. 270.14, Section II, Subpart (ii), it is our opinion that there are no faults or fissures present within a 3,000 foot radius of the subject site, and that no further studies are required.

Our services were performed using the degree of care and skill ordinarily exercised under similar circumstances by reputable geologists and geotechnical engineers in this or similar localities. No other warranty, either express or implied, is included or intended in this letter.

EXHIBIT E-5

DUAL WALL ABOVE GROUND STORAGE TANK SPECIFICATIONS AND CERTIFICATION

Innovative Tank Solutions, LLC

Engineering Design
AWWA D-100
API-650
ASME Section VIII
UL Aboveground & Underground Tanks
Vertical and Horizontal Shop Fabricated Tanks
Field Erected Tanks
Hoppers, Bins, & Silos
P.E. Stamping Available

Computer Software
AWWA D-100-96
API-650
Estimating
Tank Capacity Chart
Custom Programming In Access, Excel, and Visual Basic

Drafting
Autocad Drawings

October 13, 2000

Eidson•Brown-Minneapolis Tank
520 West 2000 South
Orem, UT 84058

Attn: Dale Kovalczyk

Dear Mr. Kovalczyk:

Enclosed are design sketches for the anticipated design of the aboveground storage tank system for the proposed Safety-Kleen Service Center in North Las Vegas, Nevada. The design ensures that the tank system will have sufficient structural integrity, is acceptable for storing, and is compatible with used parts washer solvents in accordance with the MSDS sheets provided for Safety-Kleen product mineral spirits and analytical results for waste solvents. In accordance with 40 CFR 264.192(a)(1) and 40 CFR 264.192(a)(2), the tanks have been designed for aboveground storage of used parts washer solvents in accordance with the UL142 standard. In accordance with 40 CFR 264.192(a)(5)(i) and 40 CFR 264.192(a)(5)(ii), the anchorage and foundation requirements have been designed to meet seismic zone 3 and 70 mph wind speeds in accordance with API-650. The requirements of API-650 were used for the seismic evaluation as no other geological or field investigation data was available to me at the time of the evaluation. It is also assumed that the foundation will not be subjected to frost heave.

In addition, the dual-wall tank design will provide secondary containment in accordance with 40 CFR 264.193(e)(3)(i) and 40 CFR 264.193(e)(3)(ii), so that any release from the inner tank will be completely contained by the outer shell. The outer shell of the tank will be coated with an epoxy paint and the bottom will be coated with a polyurethane coating to protect the tank from corrosion. Interior surfaces of the tank will be coated with a two part epoxy coating to protect the steel from the parts washer solvents.

Sincerely,

Jimmy Dale Schroeder

REGISTERED PROFESSIONAL ENGINEER
No. 173825
JIMMY DALE SCHROEDER
STATE OF UTAH

Jimmy Dale Schroeder, PE

20320 Quentin Ave., E. ● Hastings, Minnesota 55033-9022 ● Phone: 651-480-0258 ● Fax: 651-480-0257
8301 Broadway Blvd., SE ● Albuquerque, New Mexico 87105-7453
Website: www.innovativetanksolution.com ● E-mail: its@innovativetanksolution.com

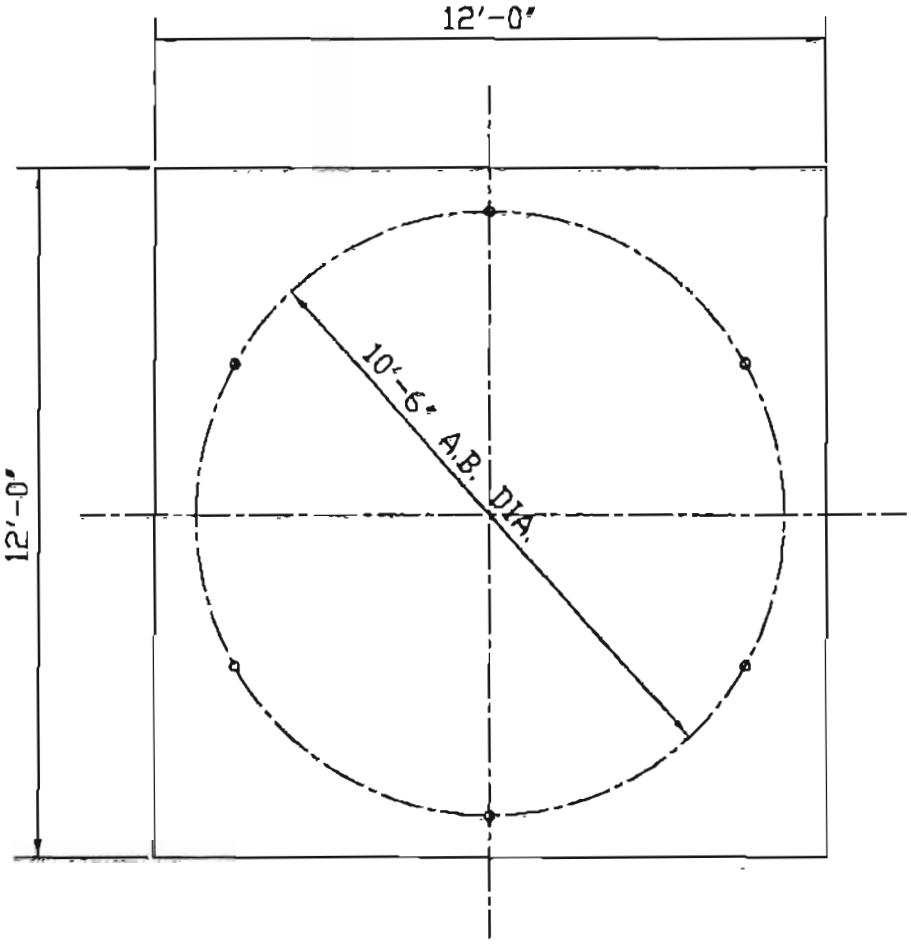

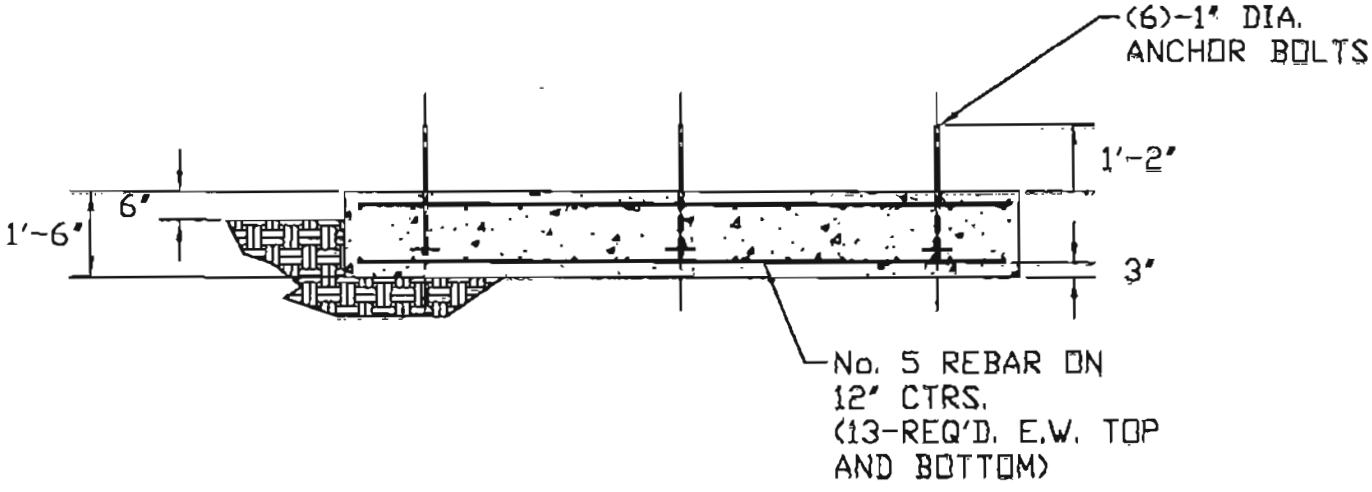

CONCRETE FOUNDATION

SAFETY-KLEEN
SKETCHES
JIMMY DALE SCHROEDER
10/13/2000

TANK SPECIFICATIONS:

INNER & OUTER SHELL: $\frac{3}{16}''$ THK.

INNER & OUTER BOTTOM: $\frac{1}{4}''$ THK.

ROOF: $\frac{3}{16}''$ THK. (2:12 PITCH)

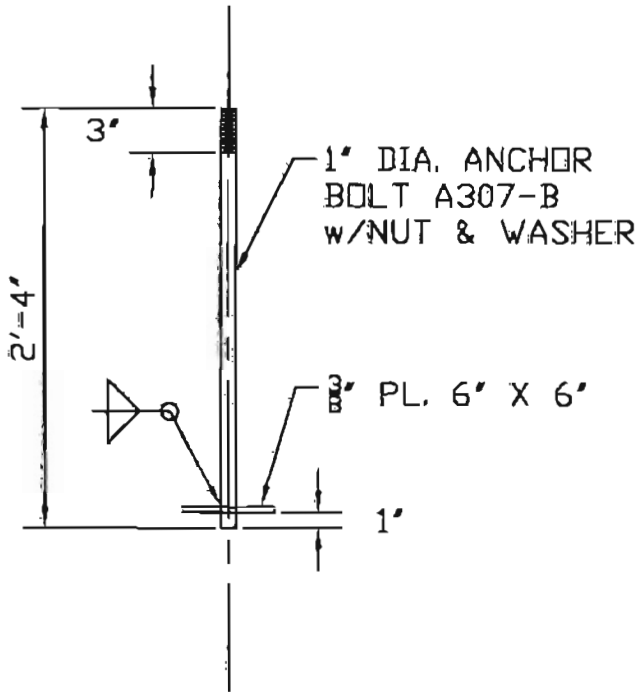

ANCHOR BOLTS

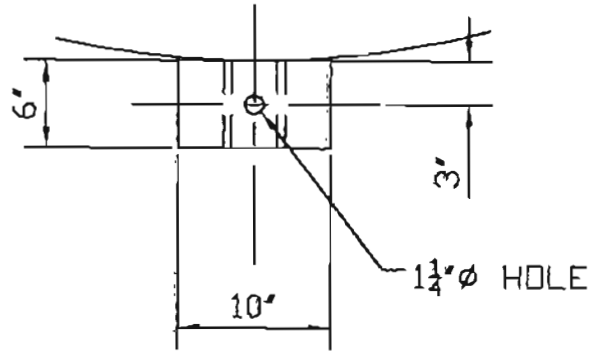

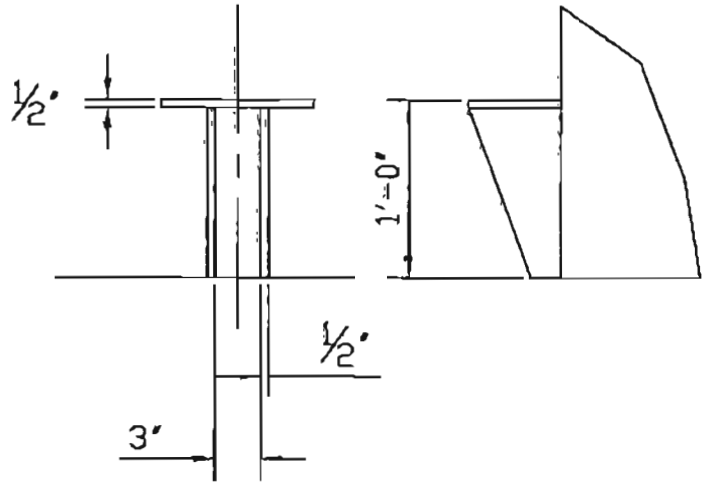

ANCHOR CHAIR

SAFETY-KLEEN
SKETCHES
JIMMY DALE SCHROEDER
10/13/2000

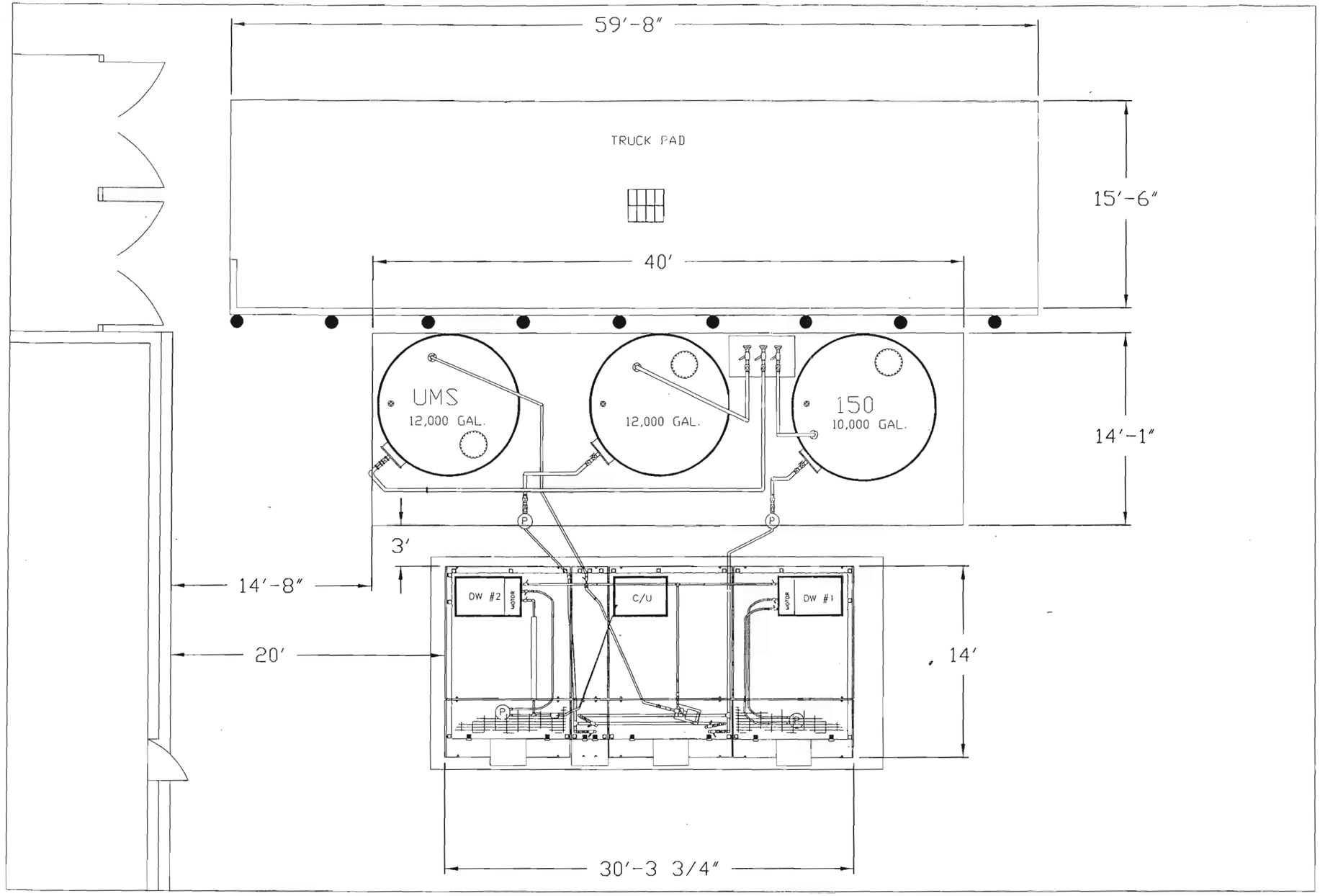

GENERAL NOTES

THIS DRAWING CONTAINS INFORMATION PROPRIETARY TO SAFETY-KLEEN CORP. ANY REPRODUCTION, DISCLOSURE OR USE OF THIS DRAWING IS EXPRESSLY PROHIBITED EXCEPT BY SAFETY-KLEEN OR AS SAFETY-KLEEN MAY AGREE IN

N W E S

NO.	DESCRIPTION	BY	CHK	APPR	DATE
1	AS BUILT PIPING	GAS			082002

REVISIONS

3 PACK TANK FARM PIPING

SAFETY-KLEEN CORP.
777 BIG TIMBER ROAD ELGIN, ILLINOIS 60123 PHONE 708-697-8460

SCALE	BY	CHKD	P.E. APPR	OP. APPR	DATE
1/8"=1'					

SERVICE CENTER BRANCH AT
N. LAS VEGAS, NEVADA

STD-DWG-REV NO.
964-4000-PB-300

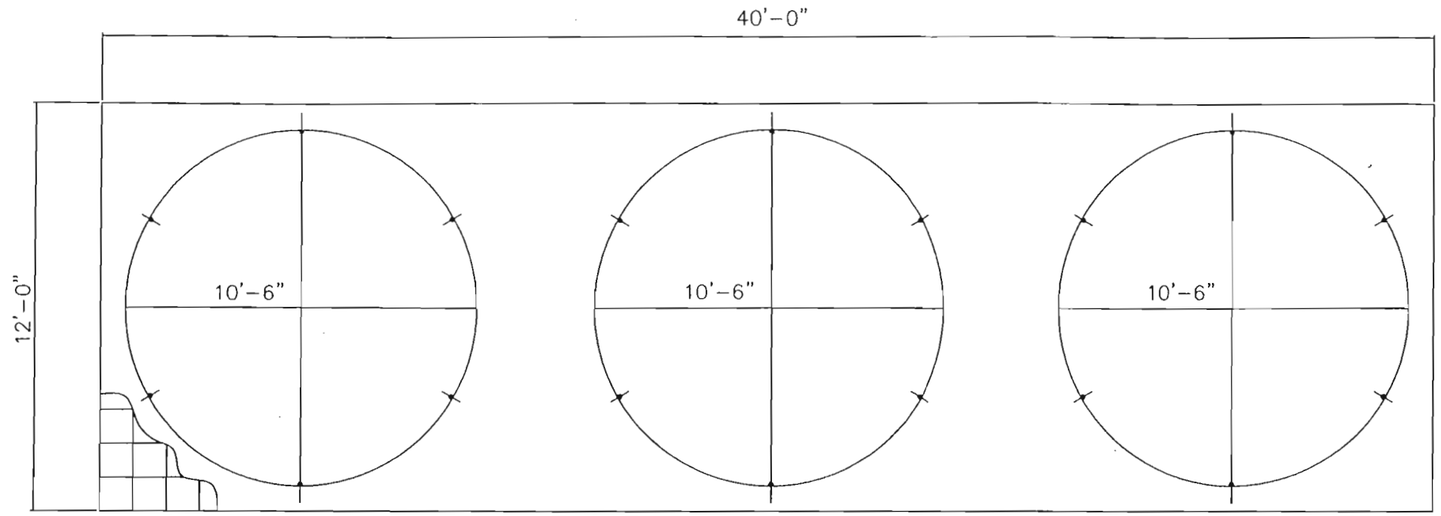

PLAN

SCALE: 3/8"=1'-0"

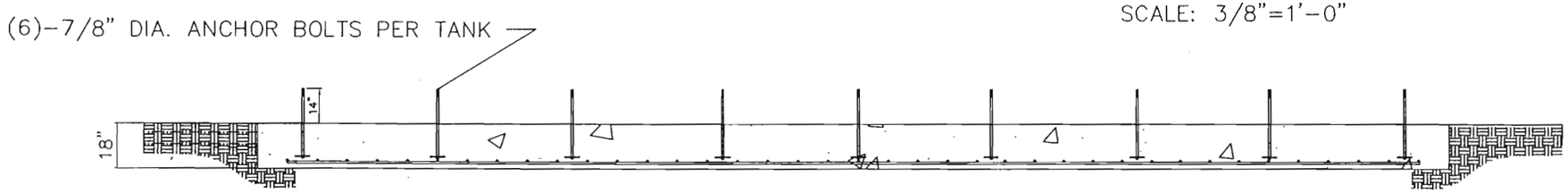

No. 5 REBAR ON 12" CTRS.
(13-REQ'D. E.W.)

ELEVATION

SCALE: 3/8"=1'-0"

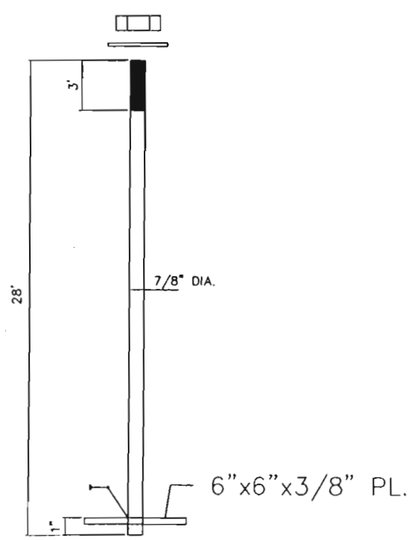

ANCHOR BOLT DETAIL

SCALE: 3"=1'-0"

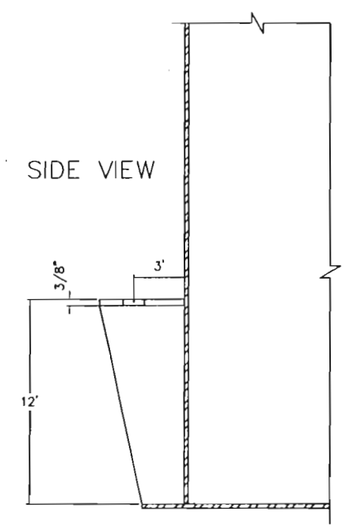

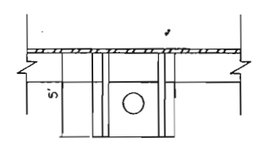

TOP VIEW

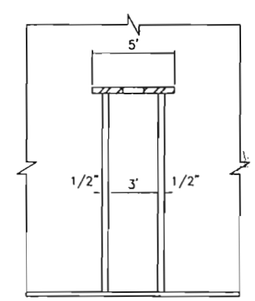

FRONT VIEW

ANCHOR CHAIR DETAILS

SCALE: 3"=1'-0"

NOTES:

-

REVISIONS

NO.	DESCRIPTION	BY / CK.	PROJ.MGR. APPR.	PROCESS APPR.	DATE
A	PRELIMINARY DESIGN	JKM / GS	-	-	06/13/01

CONSULTANT LOGO

PROPRIETARY STATEMENT

THIS DRAWING IS THE EXCLUSIVE PROPERTY OF SAFETY-KLEEN CORPORATION AND IS PROPRIETARY AND CONFIDENTIAL INFORMATION. THIS DRAWING AND THE INFORMATION CONTAINED THEREIN MUST NOT BE DUPLICATED, USED, DIVULGED, REPRODUCED, COPIED, DISCLOSED OR APPROPRIATED IN WHOLE OR IN PART FOR ANY PURPOSE OTHER THAN AS EXPRESSLY AUTHORIZED BY SAFETY-KLEEN CORPORATION. THIS DRAWING MUST BE RETURNED PROMPTLY UPON REQUEST.

SAFETY-KLEEN CORP.

DWG TITLE:

TANK FOUNDATION AND DETAILS

CAD FILE	OPERATION APPROVED	DATE
964-4000-500-A	-	06/12/01

SCALE	DRAWN	CHECKED	APPROVED	SHEET NUMBER
1/4"=1'-0"	JKM	GS	-	-

LOCATION	DRAWING NUMBER	REVISION
LAS VEGAS, NV BRANCH	964-4000-500	A

EXHIBIT E-6

SOLVENT TANK, RETURN AND FILL STATION, AND PIPING SCHEMATIC

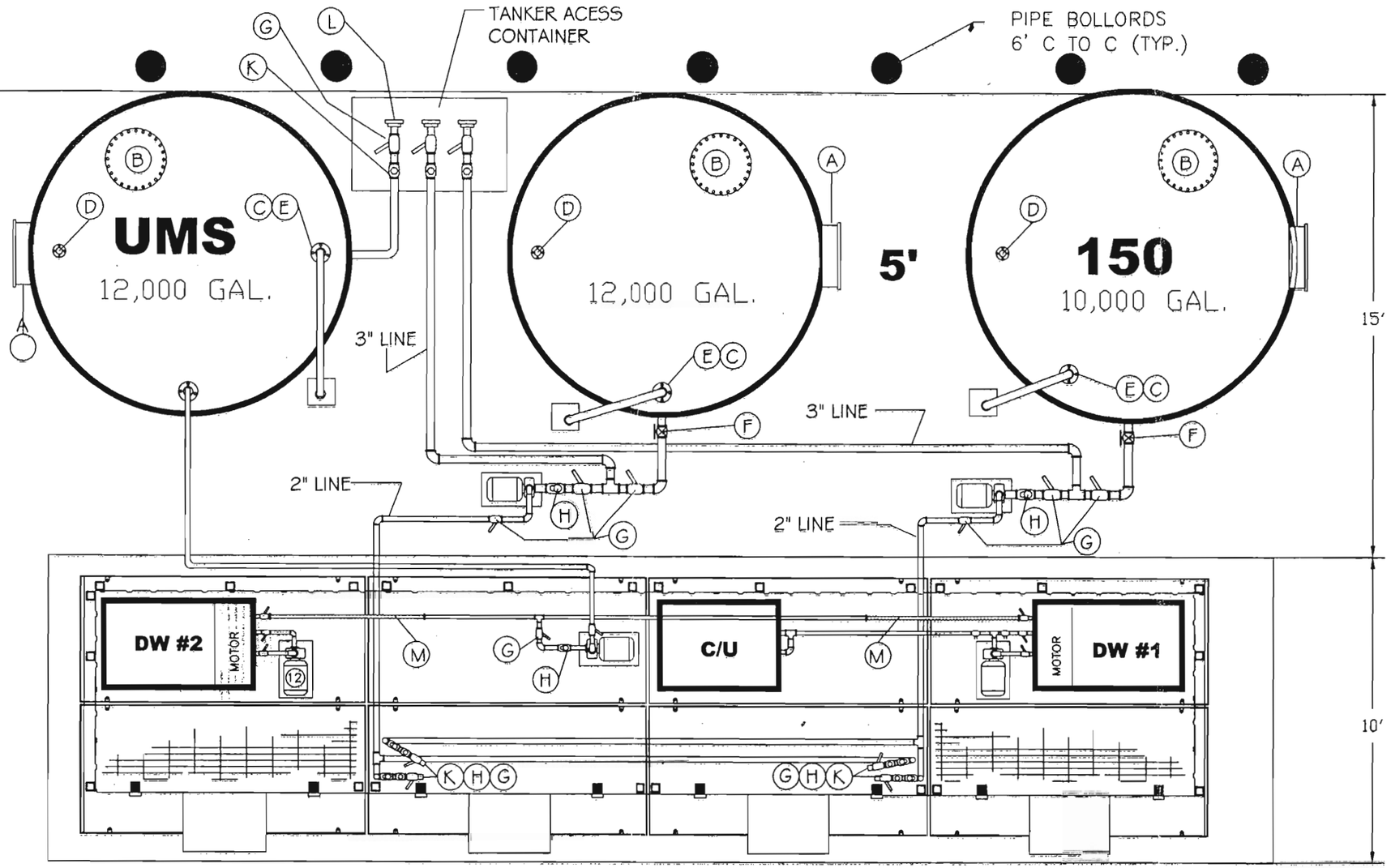

LEGEND		
A - 30" SIDE MANWAY	E - DREXAL BROOK ALARM	K- CHK VALVE
B - 24" TOP MANWAY	F - FIRE VALVE	L - CAMLOK & COVER
C - 4" FLANGES	G - BALL VALVE	M- FLEX HOSE 5'
D- 3" PRESS. VACUMM VENT	H- STRAINER	

GENERAL NOTES:

x

THIS IS A CAD GENERATED DRAWING. DO NOT REVISE MANUALLY

REV.	REVISION DESCRIPTION	MADE BY.	CHECKED BY	DATE

S.W.I.C., LTD PROPRIETARY INFORMATION

THIS DOCUMENT CONTAINS PROPRIETARY INFORMATION OF S.W.I.C. LTD OR OF THIRD PARTIES. IN CONSIDERATION OF S.W.I.C. LTD FURNISHING IT, THE RECIPIENT AGREES THAT IT WILL NOT REPRODUCE IT, DISCLOSE IT TO ANY OTHER PERSON, OR USE IT FOR ANY OTHER PURPOSE THAN THE PURPOSE FOR WHICH S.W.I.C. LTD FURNISHED IT, WITHOUT S.W.I.C. LTD'S PRIOR WRITTEN PERMISSION.

UNLESS OTHERWISE SPECIFIED DIMENSIONS ARE IN INCHES

LINEAR	.X	±.03
	.XX	±.01
	.XXX	±.005
FRACTIONAL		±1/64
ANGULAR		±1/2°

TITLE
LAS VEGAS
TANKS-RETURN&FILL

SCALE: 1/4"=1' | DATE: 05 JUN 98
BY: DSL | APPROVED:
DRAWING NUMBER
LV00002

THIRD ANGLE PROJECTION

S.W.I.C. LTD
121 Exposition St.
Denton, Texas 76205
BUS (940) 566-1899
FAX (940) 898-1035

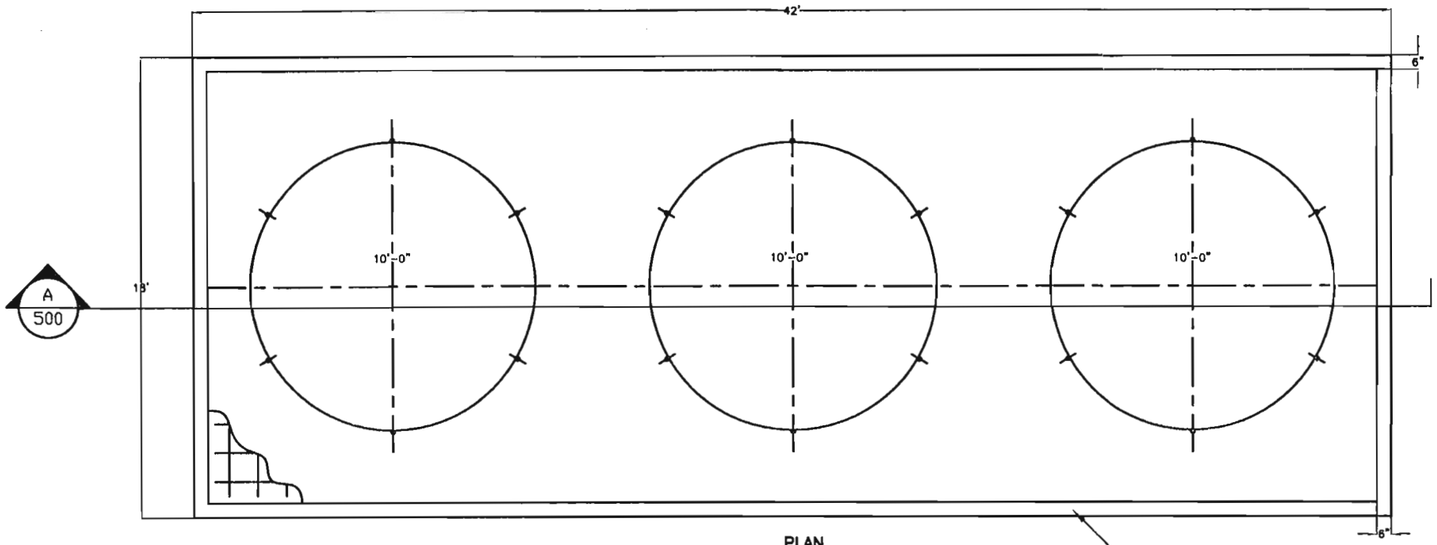

PLAN
SCALE: 3/8"=1'-0"

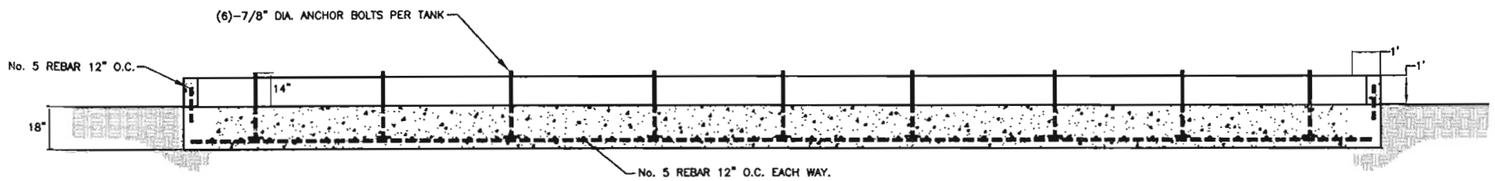

SECTION
SCALE: 3/8"=1'-0"

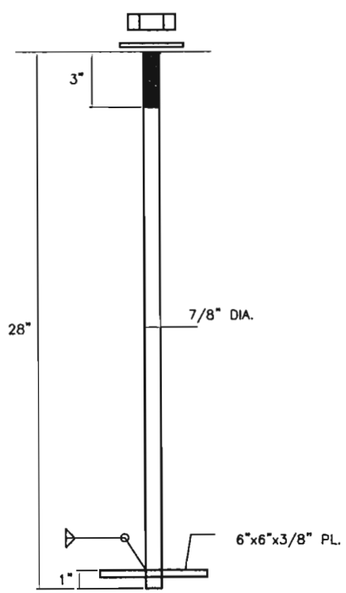

ANCHOR BOLT DETAIL
SCALE: 3"=1'-0"

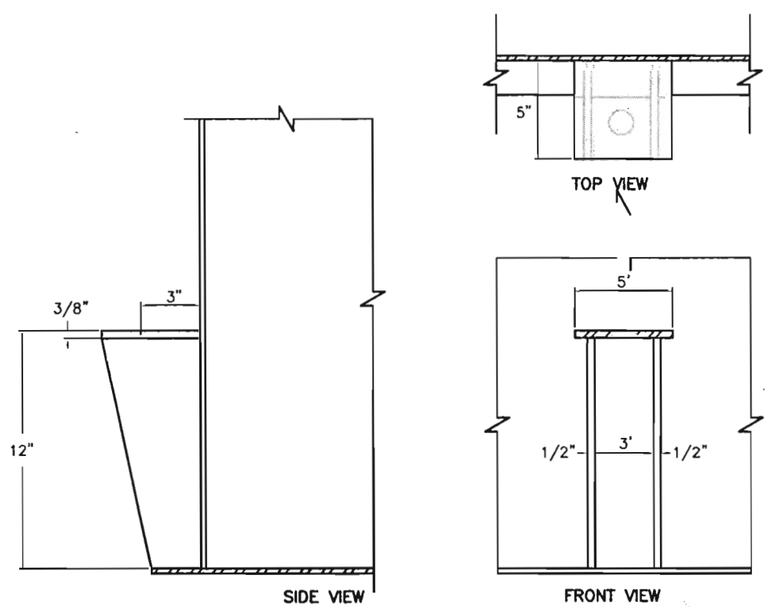

ANCHOR CHAIR DETAILS
SCALE: 3"=1'-0"

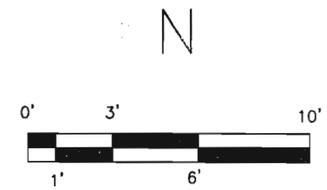

GENERAL NOTES

1. MINIMUM SOIL BEARING CAPACITY TO BE 3000 PSF. SOIL TO BE COMPACTED TO A MINIMUM OF 95% OF STANDARD PROCTOR DENSITY AND UNIFORM OVER THE FOOTPRINT.

2. ALL CONCRETE AREAS TO BE COVERED WITH BURLAP AND KEPT CONTIUOUSLY MOIST FOR A MINIMUM OF THREE DAYS AFTER PLACEMENT AND FINISHING.

3. ALL CONCRETE WORK SHALL HAVE 4000 PSI MIN. COMPRESSIVE STRENGTH AT 28 DAYS AND 3% TO 5% AIR ENTRAINING ADMIXTURE.
CONTRACTOR TO OBTAIN AND SUPPLY TESTING RESULTS OF CONCRETE CYLINDER TESTS.

4. ALL NEW CONCRETE SURFACES TO BE SEALED WITH CHEMTEC SEALER PER S-K SPECS.

5. CONTRACTOR TO CONFIRM ALL DIMENSIONS.

6. CONTRACTOR TO APPLY CHEMTEC SEALER PROVIDED BY S-K.

PROPRIETARY STATEMENT

THIS DRAWING IS THE EXCLUSIVE PROPERTY OF SAFETY-KLEEN SYSTEMS, INC. AND IS PROPRIETARY AND CONFIDENTIAL INFORMATION. THIS DRAWING AND THE INFORMATION CONTAINED THEREIN MUST NOT BE DUPLICATED, USED, DIVULGED, REPRODUCED, COPIED, DISCLOSED OR APPROPRIATED IN WHOLE OR IN PART FOR ANY PURPOSE OTHER THAT AS EXPRESSLY AUTHORIZED BY SAFETY-KLEEN SYSTEMS, INC. THIS DRAWING MUST BE RETURNED PROMPTLY UPON REQUEST.

Project Solutions Companies
2005 West Broadway • Suite 210 • Columbia • MO 65203
• Phone: (573) 443-7100 • Fax: (573) 443-7181 •

NO.	DESCRIPTION	BY	CHK	APPR	DATE
0	REISSUED FOR PERMIT	JEK	GO	GO	101311

REVISIONS

TITLE
TANK FARM CONCRETE PAD PLAN AND ANCHOR DETAILS

SAFETY-KLEEN SYSTEMS, INC.
5400 LEGACY DR. CLUSTER III, BLDG.3 PLANO, TX 75024
PHONE: 800-669-5740

SCALE	BY	CHKD	APPROVED	OPERATIONS	DATE
3/8"=1'	JEK	GO	GO	GO	10/13/11

SERVICE CENTER LOCATION	SC-DWG NUMBER	REV. NO.
N. LAS VEGAS, NV.	71387-5500-500	0

EXHIBIT E-7

TYPICAL RETURN AND FILL CONSTRUCTIOIN DIAGRAM AND DETAILS

DUMPSTER/BARREL WASHER ASSY – DETAIL 1

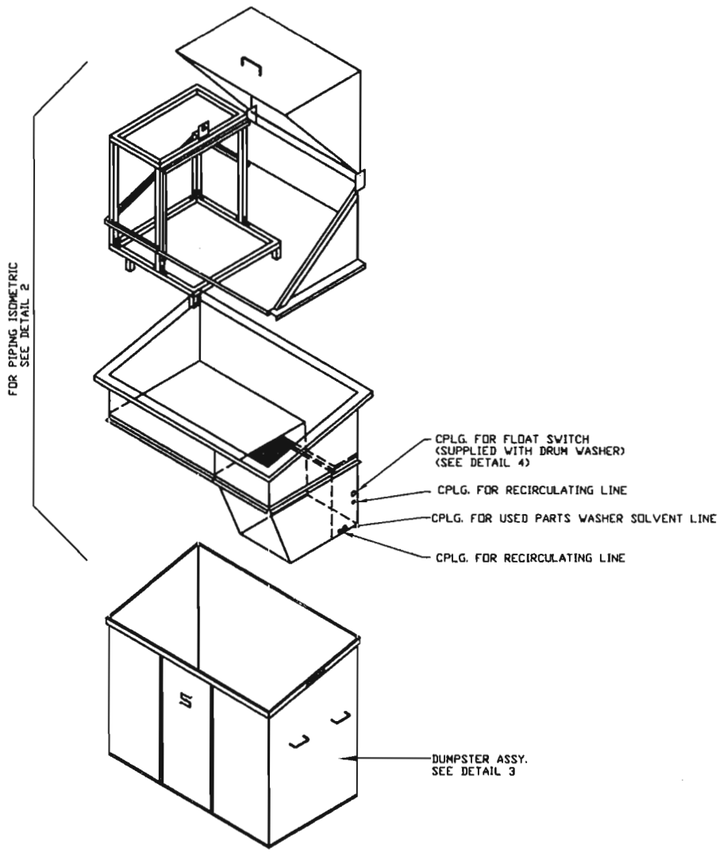

DUMPSTER ASSY. – DETAIL 3

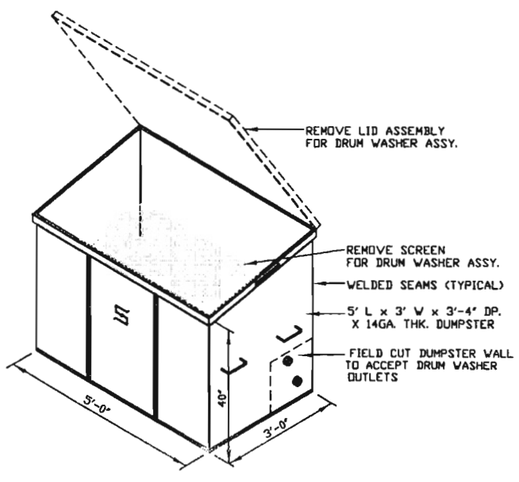

BARREL WASHER PIPING ISOMETRIC – DETAIL 2

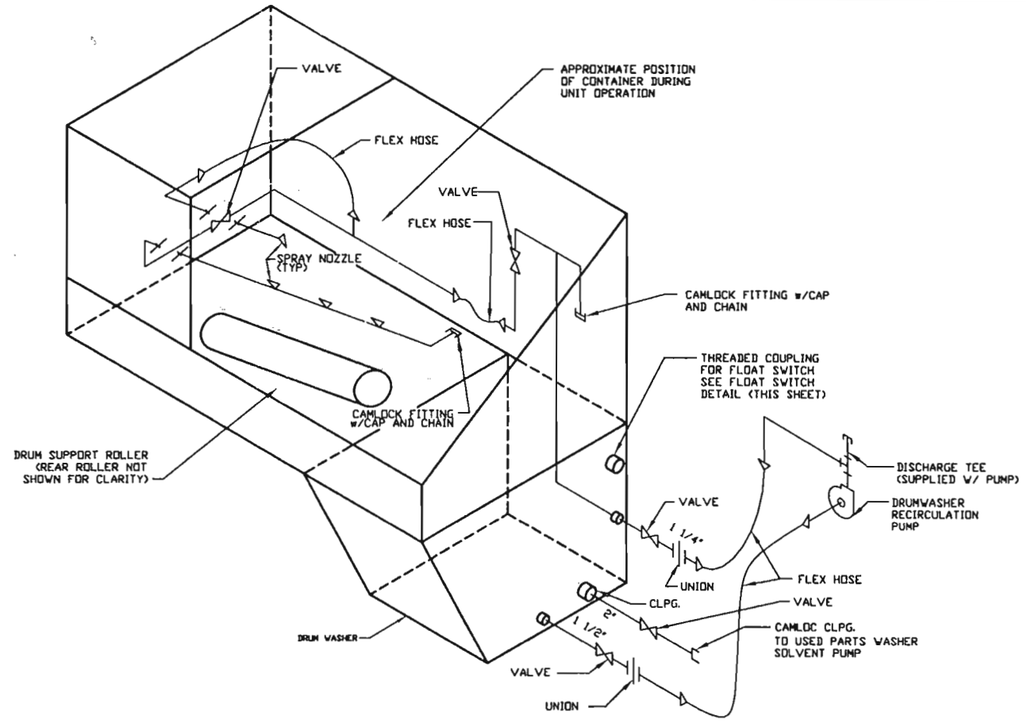

FLOAT SWITCH INSTALLATION – DETAIL 4

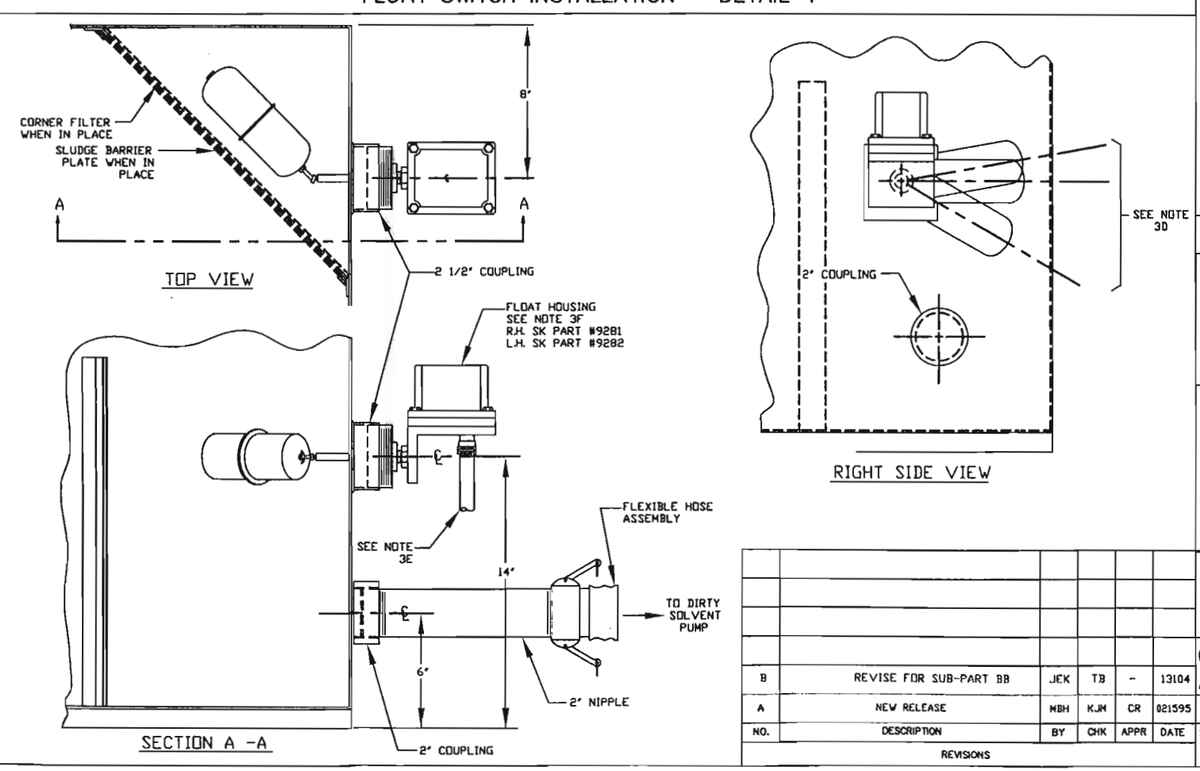

GENERAL NOTES

1.) THE BARREL WASHER UNIT AND DUMPSTER ARE SUPPLIED BY SAFETY-KLEEN CORP. AND COMBINED BY CONTRACTOR. RECIRCULATING PUMP, AND VALVES FOR DRUM WASHER ARE SUPPLIED BY SAFETY-KLEEN CORP. AND INSTALLED WITH CONTRACTOR SUPPLIED PIPE UNIONS AND HOSES.

9. ALL ITEMS WITH SAFETY-KLEEN PART NO. REFERENCES WILL BE SUPPLIED TO CONTRACTOR.

3. FLOAT SWITCH INSTALLATION INSTRUCTIONS

A. TAKE FLOAT SWITCH AND WRAP CLOCKWISE WITH 2 TEFLON WINDS OF TAPE AND INSTALL INTO 2 1/2" COUPLING ON OUTSIDE OF DUMPSTER

B. TAKE FLOAT AND THREAD IT INTO THE FLOAT SWITCH FROM THE INSIDE SHAFT OF THE DUMPSTER AND TIGHTEN SECURELY.

C. RELEASE SHIPPING BRACKET BY REMOVING SCREW AND DISCARDING BRACKET.

D. FLOAT TRAVEL SETTING ADJUSTMENTS CAN BE ACCOMPLISHED BY LOOSENING ADJUSTMENT SCREWS. THE FLOAT TRAVEL ARC SHOULD BE SET AT 10~ TRAVEL UP AND 30° TRAVEL DOWN. (SEE CALIBRATION ON DIAL). SEE RIGHT SIDE VIEW.

E. FLOAT SWITCH SHOULD BE WIRED UP ACCORDING TO MFGRS. SPECS AND IN COMPLIANCE WITH ANY LOCAL CODES. (USE RIGID CONDUIT THROUGHOUT).

F. FLOAT SWITCH TO BE INSTALLED ON SAME SIDE OF DUMPSTER AS DRAIN LINE. INSTALLATION SHOWN IS FOR RIGHT HAND SIDE OF DUMPSTER. FLOAT SWITCH IS SQUARE D CLASS 9037 HR – 3 (RIGHT HAND) OR HR – 4 (LEFT HAND).

G. RE-ADJUST FLOAT STOPS TO THOSE SHOWN ON RIGHT SIDE VIEW.

H. WHEN DUMPSTER DOES NOT HAVE A 2 1/2" COUPLING, ONE SHOULD BE ON (LIQUID TIGHT) TO DIMENSIONS SHOWN.

PROPRIETARY STATEMENT

THIS DRAWING IS THE EXCLUSIVE PROPERTY OF SAFETY-KLEEN CORP. AND IS PROPRIETARY AND CONFIDENTIAL INFORMATION. THIS DRAWING AND THE INFORMATION CONTAINED THEREIN MUST NOT BE DUPLICATED, USED, DIVULGED, REPRODUCED, COPIED, DISCLOSED OR APPROPRIATED IN WHOLE OR IN PART FOR ANY PURPOSE OTHER THAN AS EXPRESSLY AUTHORIZED BY SAFETY-KLEEN CORP. THIS DRAWING MUST BE RETURNED PROMPTLY UPON REQUEST.

Project Solutions Companies
1380 Boone Industrial Drive • Suite 200 • Columbia • MO 65202
• Phone: (573) 443-7100 • Fax: (573) 443-7181 •

NO.	DESCRIPTION	BY	CHK	APPR	DATE
B	REVISE FOR SUB-PART BB	JEK	TB	–	13104
A	NEW RELEASE	MBH	KJM	CR	021595

REVISIONS

TITLE
DRUM WASHER/DUMPSTER ISOMETRIC

SAFETY-KLEEN SYSTEMS, INC.
5400 LEGACY DR. CLUSTER #1, BLDG. 3 PLANO, TX. 75024 800-669-5740

SCALE	BY	CHKD	APPROVED	OPERATIONS	DATE
NONE	MBH	KJM	CR		02-08-95

SERVICE CENTER LOCATION	SC-DWG NUMBER	REV. NO.
N. LAS VEGAS, NV.	7137-5600-299	B

051094

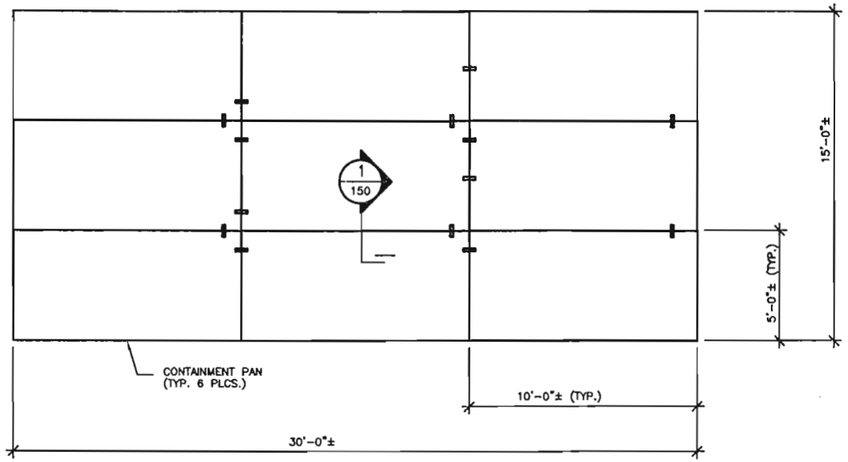

SECONDARY CONTAINMENT PAN LAYOUT
TYPICAL CONSTRUCTION
NO SCALE

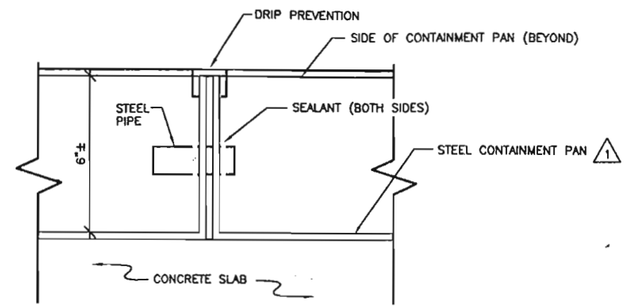

1/150 CONTAINMENT PAN SECTION
TYPICAL CONSTRUCTION
NO SCALE

CONTAINMENT CALCULATIONS

FORMULA USED (L) X (W) X (H) X 7.48 GAL/CF

L = 10'
W = 5'
H = 6"

10' X 5' X 6" X 7.48 GAL/CF = 187 GALLONS
187 GALLONS X 9 PANS = +1683 GALLONS

DISPLACEMENT OF DRUM WASHERS/CONTINUED USE VATS

5' X 3' X 6" X 7.48 GAL/CF = 56 GALLONS
56 GAL X 3 UNITS = – 168 GALLONS

MISC. DISPLACEMENT OF COLUMNS, BUMPER POSTS, HARDWARE 1% = – 17 GALLONS

TOTAL CONTAINMENT = +1498 GALLONS

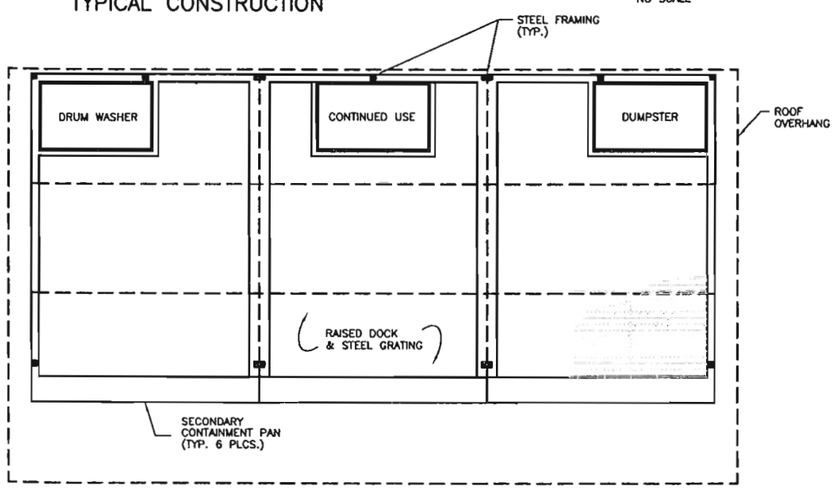

FLOOR PLAN
TYPICAL CONSTRUCTION
NO SCALE

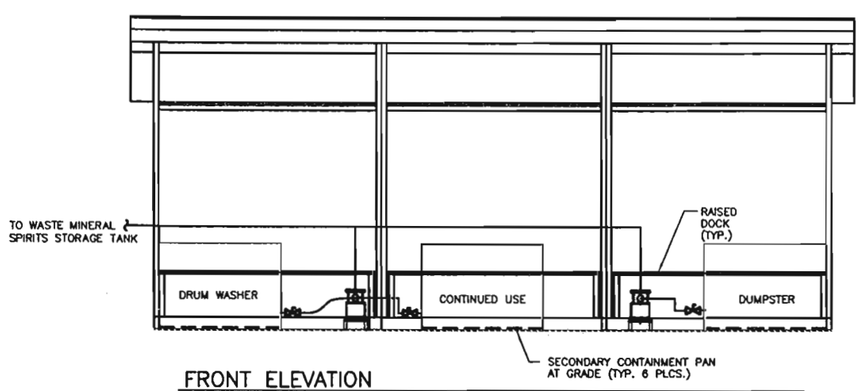

FRONT ELEVATION
TYPICAL CONSTRUCTION
NO SCALE

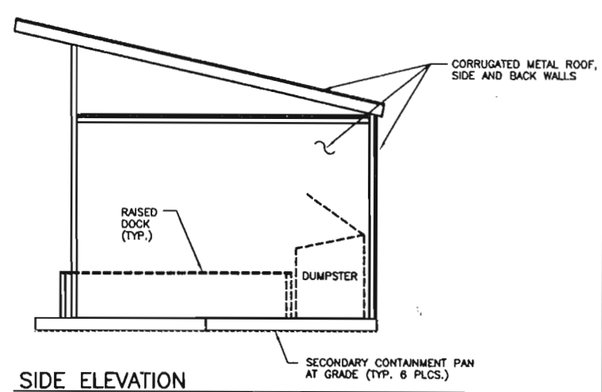

SIDE ELEVATION
TYPICAL CONSTRUCTION
NO SCALE

GENERAL NOTES

1. DETAILS INDICATED AS TYPICAL CONSTRUCTION IDENTIFY TYPICAL SAFETY-KLEEN CONSTRUCTION PRACTICES WHICH WERE NOT FIELD VERIFIED UNLESS SPECIFICALLY INDICATED.

PROPRIETARY STATEMENT

THIS DRAWING IS THE EXCLUSIVE PROPERTY OF SAFETY-KLEEN SYSTEMS, INC. AND IS PROPRIETARY AND CONFIDENTIAL INFORMATION. THIS DRAWING AND THE INFORMATION CONTAINED THEREIN MUST NOT BE DUPLICATED, USED, DIVULGED, REPRODUCED, COPIED, DISCLOSED OR APPROPRIATED IN WHOLE OR IN PART FOR ANY PURPOSE OTHER THAT AS EXPRESSLY AUTHORIZED BY SAFETY-KLEEN SYSTEMS, INC. THIS DRAWING MUST BE RETURNED PROMPTLY UPON REQUEST.

Project Solutions Companies
1380 Boone Industrial Drive • Suite 200 • Columbia • MO 65202
• Phone: (573) 443-7100 • Fax: (573) 443-7181 •

NO.	DESCRIPTION	BY	CHK	APPR	DATE

REVISIONS

TITLE
3-BAY RETURN/FILL SHELTER
PLAN AND DETAILS

SAFETY-KLEEN SYSTEMS, INC.
5400 LEGACY DR. CLUSTER III, BLDG.3 PLANO, TX 75024
PHONE: 800-669-5740

SCALE	BY	CHKD	APPROVED	OPERATIONS	DATE
AS SHOWN	CWM	GPM			7-23-93

SERVICE CENTER LOCATION	SC-DWG. NO.-REV. NO.	SHEET NO.
N. LAS VEGAS, NV.	7137-5600-700	0

7-23-93 5:00 pm STD .DWG STANDARD

— Not legible —
Replaced this w/ the other 2 dwgs
in this appendix (Per NOD 2).

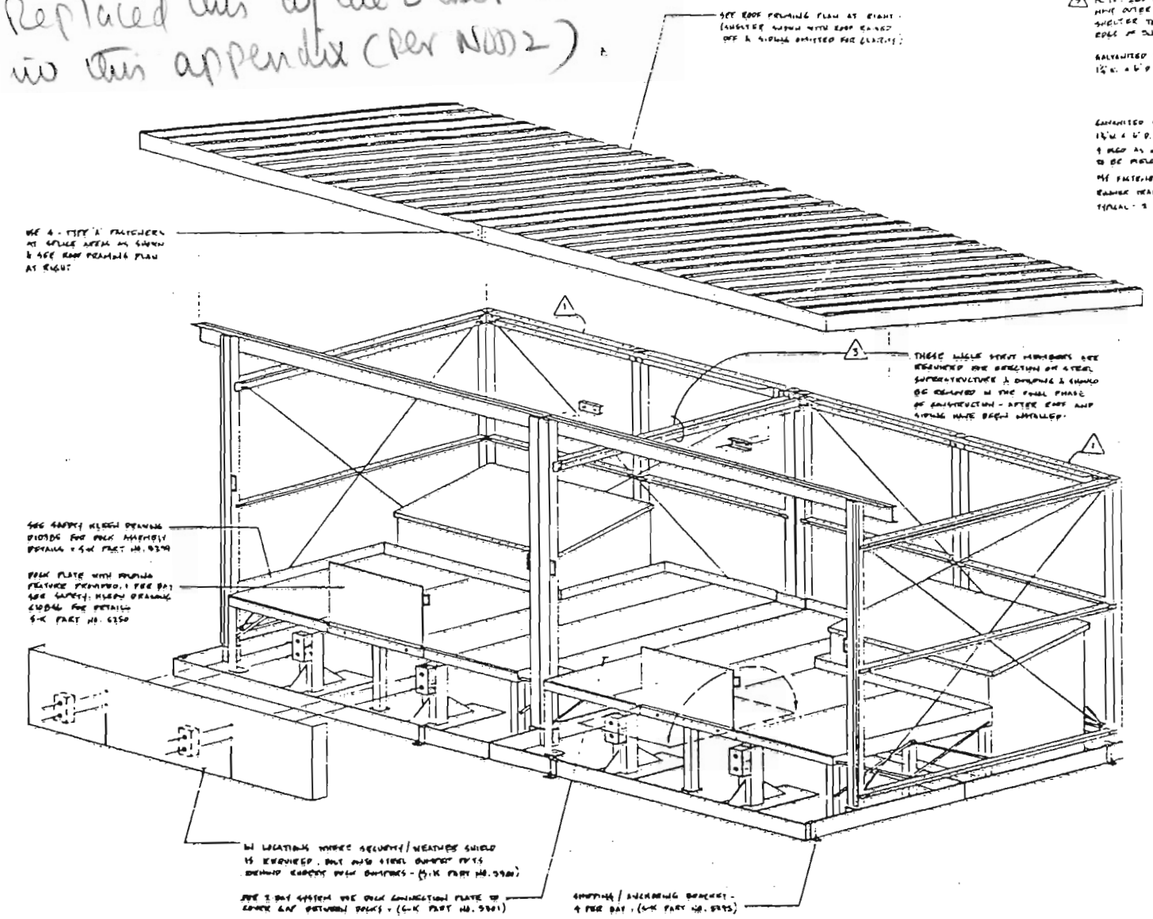

- PICTORIAL - 2-BAY SYSTEM -

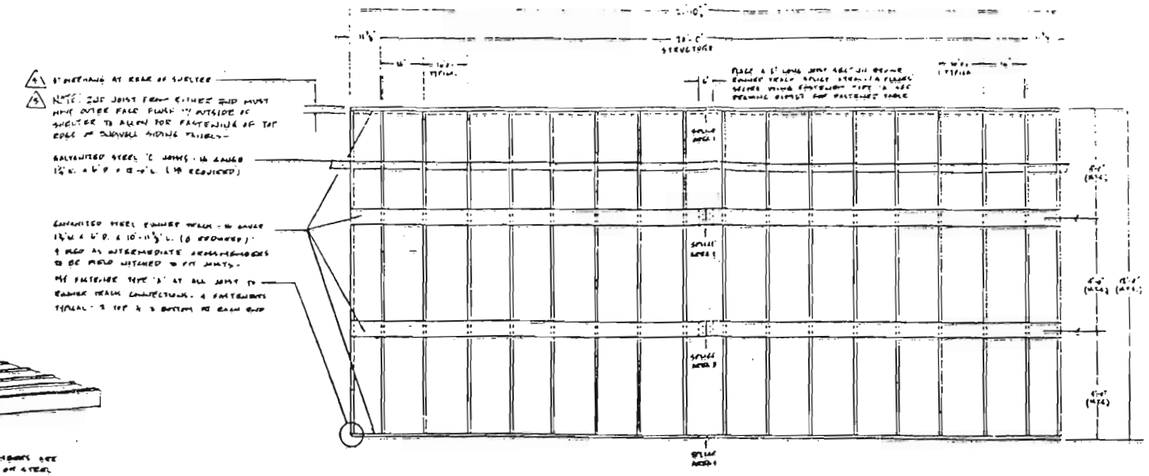

- ROOF - FRAMING PLAN -

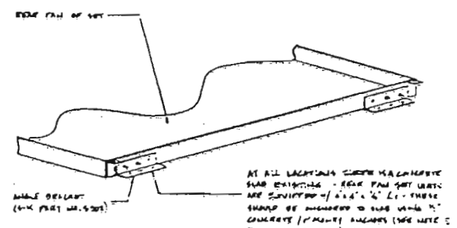

- SLIDE PREVENTION -

- NOTES -

1. WORK THIS DRAWING WITH SAFETY-KLEEN CORP DRAWINGS:

   D10967 - CONSTRUCTION & ASSEMBLY DETAILS FOR METAL SHELTER
   D10985 - EXPLODED ASSEMBLY DETAIL - PORTABLE SHELTER MED. DECK

2. SHELTER IS TO BE ERECTED ON A CONCRETE SLAB USING THE ANCHORING BRACKETS ALONG WITH HILTI FASTENING SYSTEMS INC. MODEL HD WITH SELF-DRILLING MASONRY ANCHORS FOR ½"-13 MACHINE BOLTS OR EQUIVALENT TO MOUNT SHELTER TO CONCRETE SLAB.

3. SEE INDIVIDUAL SERVICE CENTER SITE PLAN FOR RECOMMENDED LOCATION OF PAN SETS, ANCHORING PIERS & / OR BRACKETS, BUMPER POSTS, DUMPSTER PLACEMENT, ETC.

4. 10' x 10' WHITE OR BEIGE CAN BE RETROFITTED WITH ROLL-UP OVERHEAD DOOR ASSEMBLIES WHICH MOUNT TO THE FRONT FACE OF FRONT POSTS. (1 DOOR PER BAY). IN THOSE CASES WHERE AESTHETICS &/OR SECURITY CONSIDERATIONS MERIT THE USE OF THE OVERHEAD DOOR CONCEPT, THE DOORS WILL BE SUPPLIED BY OVERHEAD DOOR CO. & SHIPPED TO THE SITE FOR INSTALLATION

5. N.T.S. - ABBREVIATION INDICATING THOSE DIMENSIONS, NOT TO SCALE

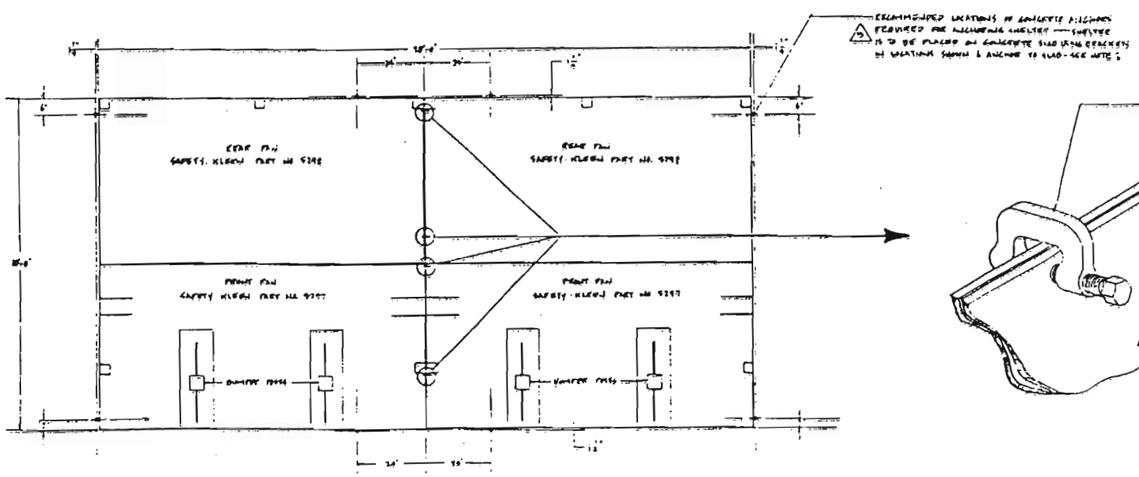

- PLAN VIEW - PAN ARRANGEMENT -

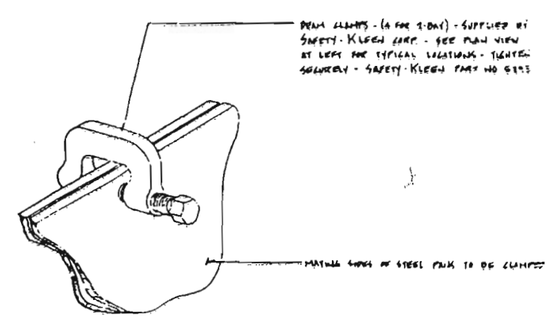

- CLAMP DETAIL -

safety-kleen corp.
777 BIG TIMBER ROAD • ELGIN, ILLINOIS 60120
PHONE 312/697-8460

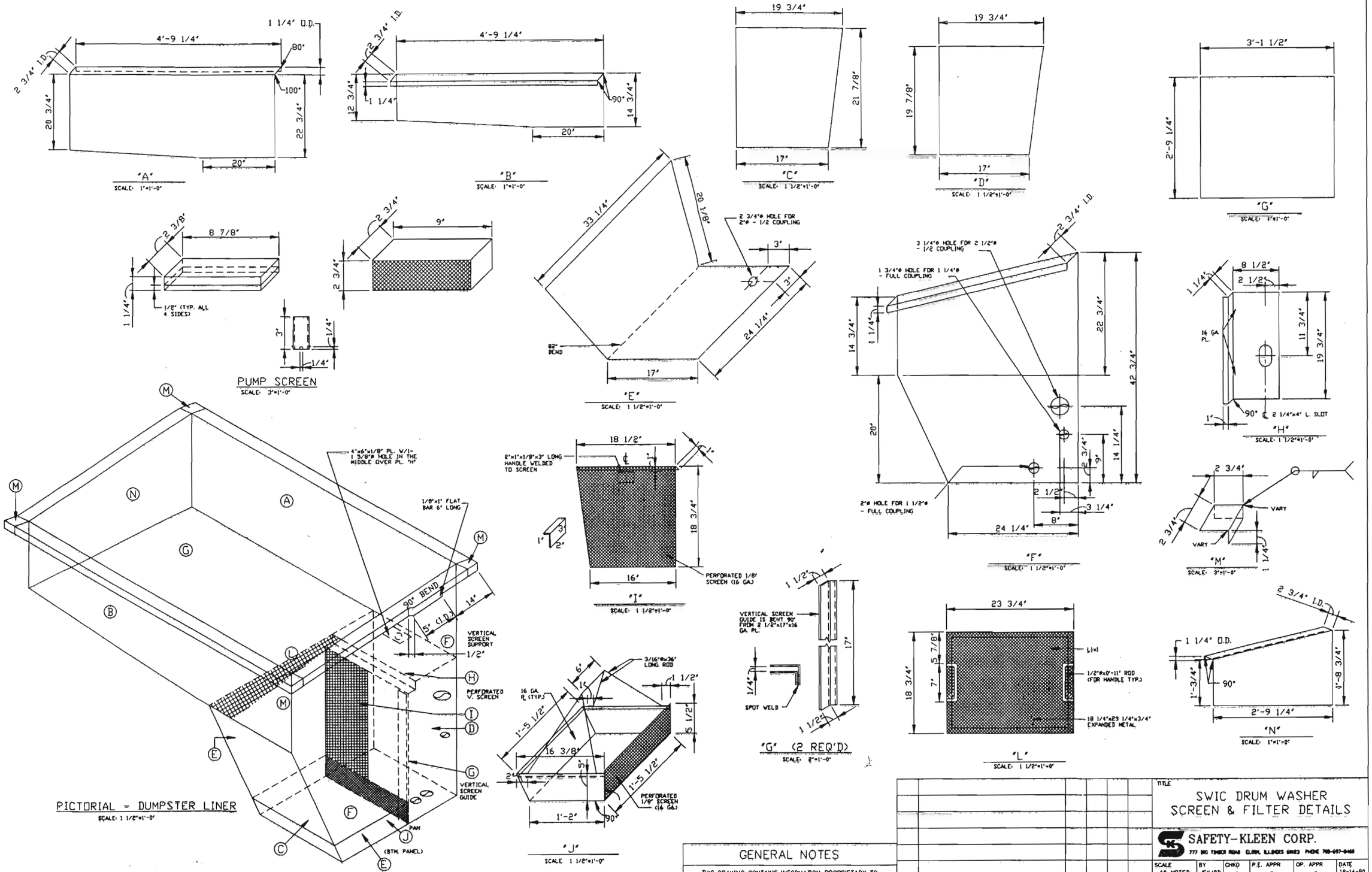

GENERAL NOTES

THIS DRAWING CONTAINS INFORMATION PROPRIETARY TO SAFETY-KLEEN CORPORATION. ANY REPRODUCTION, DISCLOSURE OR USE OF THIS DRAWING IS EXPRESSLY PROHIBITED EXCEPT BY SAFETY-KLEEN OR AS SAFETY-KLEEN MAY AGREE IN WRITING.

NO.	DESCRIPTION	BY	CHK	APPR	DATE
	REVISIONS				

TITLE

SWIC DRUM WASHER SCREEN & FILTER DETAILS

SAFETY-KLEEN CORP.
777 BIG TIMBER ROAD ELGIN, ILLINOIS 60123 PHONE 708-697-8460

SCALE	BY	CHKD	P.E. APPR	OP. APPR	DATE
AS NOTED	JEK/RD	-	-	-	12-14-90

SERVICE CENTER STANDARDS	STD-DWG NUMBER	REV. NO.
FABRICATION	STD-1001	00

8-21-91

EXHIBIT E-8

TYPICAL SCHEMATIC WIRING DIAGRAM FOR HIGH LEVEL ALARM – THREE TANK SYSTEM AND SPECIFICIATIONS

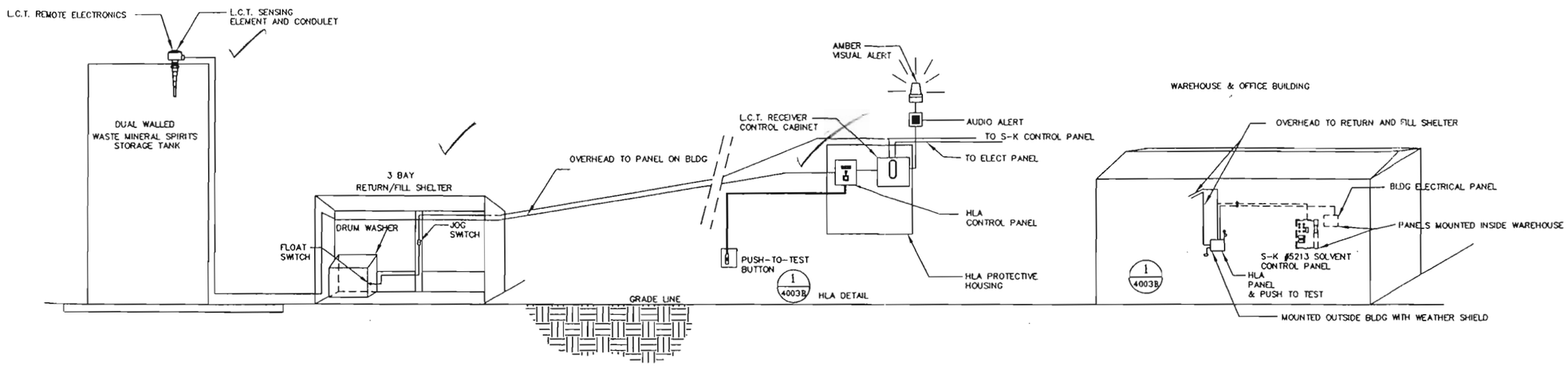

HIGH LEVEL ALARM SYSTEM DIAGRAM
TYPICAL CONSTRUCTION

SCALE: NONE

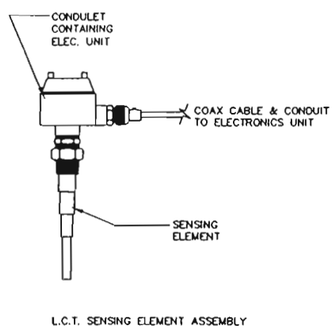

L.C.T. SENSING ELEMENT AND CONDULET DETAIL
TYPICAL CONSTRUCTION

SCALE: NONE

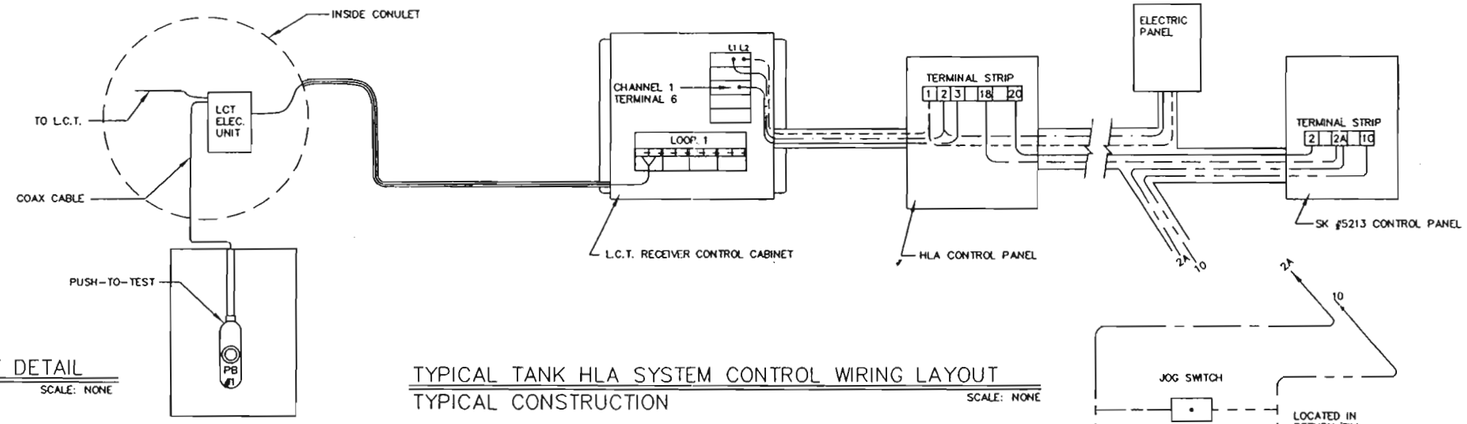

TYPICAL TANK HLA SYSTEM CONTROL WIRING LAYOUT
TYPICAL CONSTRUCTION

SCALE: NONE

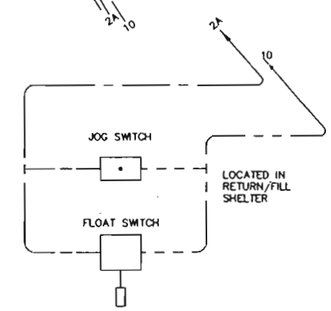

RETURN/FILL WIRING DETAIL
TYPICAL CONSTRUCTION

SCALE: NONE

GENERAL NOTES

1. L.C.T. = LEVEL CONTROL TRANSMITTER
2. (1) AS BUILT MEASUREMENT OR FIELD VERIFICATION OF EXISTING CONDITIONS ON 8-20-02
3. DETAILS INDICATED AS TYPICAL CONSTRUCTION IDENTIFY TYPICAL SAFETY-KLEEN CONSTRUCTION PRACTICES WHICH WERE NOT FIELD VERIFIED UNLESS SPECIFICALLY INDICATED.

PROPRIETARY STATEMENT

THIS DRAWING IS THE EXCLUSIVE PROPERTY OF SAFETY-KLEEN CORP. AND IS PROPRIETARY AND CONFIDENTIAL INFORMATION. THIS DRAWING AND THE INFORMATION CONTAINED THEREIN MUST NOT BE DUPLICATED, USED, DIVULGED, REPRODUCED, COPIED, DISCLOSED OR APPROPRIATED IN WHOLE OR IN PART FOR ANY PURPOSE OTHER THAN AS EXPRESSLY AUTHORIZED BY SAFETY-KLEEN CORP. THIS DRAWING MUST BE RETURNED PROMPTLY UPON REQUEST.

NO.	DESCRIPTION	BY	CHK	APPR	DATE
1	AS BUILTS	GAS			082002

REVISIONS

TITLE

WASTE MINERAL SPIRITS TANK HLA SYSTEM DIAGRAM

SAFETY-KLEEN CORP.
777 BIG TIMBER ROAD ELGIN, ILLINOIS 60123 PHONE 708-697-8460

SCALE	BY	CHKD	P.E. APPR	OP. APPR	DATE
AS SHOWN	GAS				8-20-02

SERVICE CENTER STANDARDS	STD-DWG-REV NO.	SHEET NO.
N. LAS VEGAS, NV	964-4003B-00	

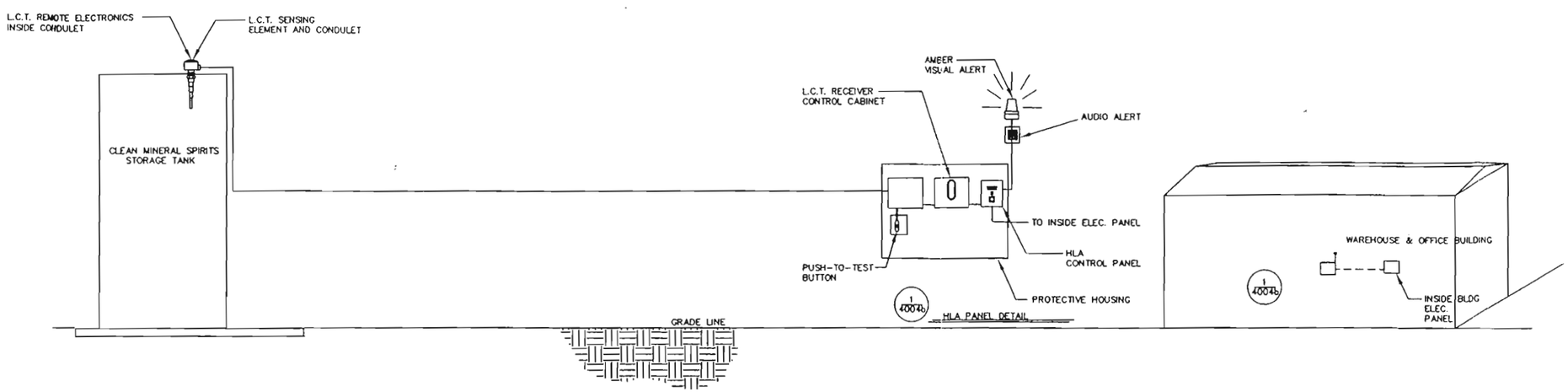

HIGH LEVEL ALARM SYSTEM DIAGRAM
TYPICAL CONSTRUCTION

NO SCALE

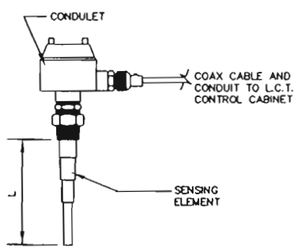

L.C.T. SENSING ELEMENT ASSEMBLY

L.C.T. SENSING ELEMENT AND CONDULET DETAIL
TYPICAL CONSTRUCTION

NO SCALE

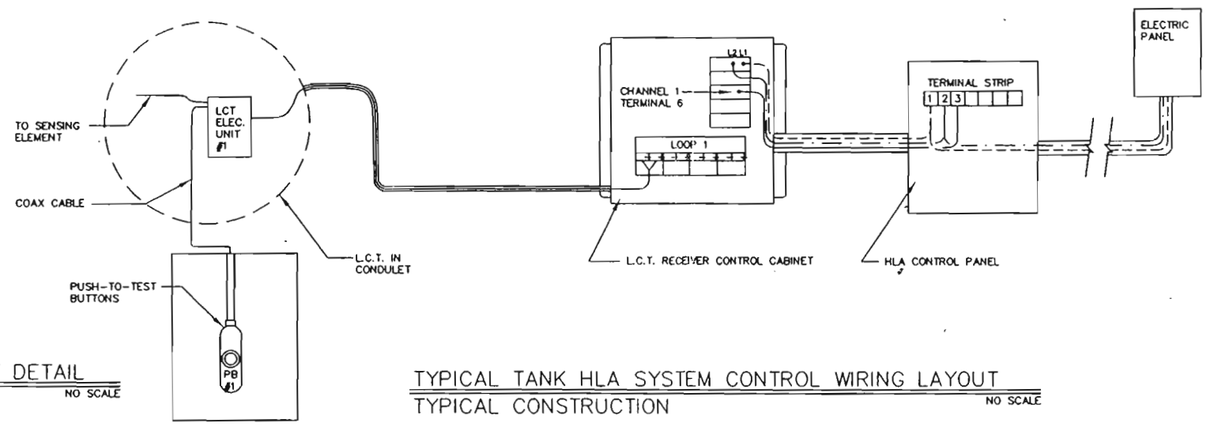

TYPICAL TANK HLA SYSTEM CONTROL WIRING LAYOUT
TYPICAL CONSTRUCTION

NO SCALE

GENERAL NOTES

1. L.C.T. = LEVEL CONTROL TRANSMITTER
2. (1) AS BUILT MEASUREMENT OR FIELD VERIFICATION OF EXISTING CONDITIONS ON 8-20-02.
3. DETAILS INDICATED AS TYPICAL CONSTRUCTION IDENTIFY TYPICAL SAFETY-KLEEN CONSTRUCTION PRACTICES WHICH WERE NOT FIELD VERIFIED UNLESS SPECIFICALLY INDICATED.

PROPRIETARY STATEMENT

THIS DRAWING IS THE EXCLUSIVE PROPERTY OF SAFETY-KLEEN CORP. AND IS PROPRIETARY AND CONFIDENTIAL INFORMATION. THIS DRAWING AND THE INFORMATION CONTAINED THEREIN MUST NOT BE DUPLICATED, USED, DIVULGED, REPRODUCED, COPIED, DISCLOSED OR APPROPRIATED IN WHOLE OR IN PART FOR ANY PURPOSE OTHER THAN AS EXPRESSLY AUTHORIZED BY SAFETY-KLEEN CORP. THIS DRAWING MUST BE RETURNED PROMPTLY UPON REQUEST.

NO.	DESCRIPTION	BY	CHK	APPR	DATE
1	AS BUILTS	GAS			082002

REVISIONS

TITLE

CLEAN MINERAL SPIRITS HLA SYSTEM DIAGRAM

SAFETY-KLEEN CORP.
777 BIG TIMBER ROAD ELGIN, ILLINOIS 60123 PHONE 708-697-8460

SCALE	BY	CHKD	P.E. APPR	OP. APPR	DATE
AS SHOWN	GAS				082002

SERVICE CENTER STANDARDS	STD-DWG-REV NO.	SHEET NO.
N LAS VEGAS, NV	964-4004b-00	

AMETEK®
DREXELBROOK

The Leader of RF
and Sonic Level

For Assistance Call 1-800-527-6297
Outside North America 1-215-674-1234

Installation and Operating Instructions

Series 506-6200
Level Control Transmitter (LCT)
using 406-6200 Electronics

(215) 674-1234 Outside North America
1-800-527-6297 US and Canada
http://www.drexelbrook.com
e-mail:Service@Drexelbrook.com

EDO #4-95-251
506-6200-LM

Series 506-6200
Level Control Transmitter (LCT)
using 406-6200 Electronics

AMETEK®
DREXELBROOK
An ISO 9001 Certified Company

205 Keith Valley Road Horsham, PA 19044

US Sales	800-553-9092
24 Hour Service	800-527-6297
International	215-674-1234
Fax	215-674-2731
E-mail	deinfo@drexelbrook.com
Web	www.drexelbrook.com

Table of Contents

Section 1.0 Introduction 3

1.1 System Description 3
1.2 Verify System Description 4
1.2.1 Circuit Description 4
1.3 Models Available 4
1.3.1 Electronic Units 4
1.3.2 Connecting Cables 5
1.3.3 Sensing Elements 5
1.3.4 Verify System 5

Section 2.0 Specifications and Intrinsic Safety 6

2.1 Electronic Unit 6
2.2 Verify System 6
2.3 Three-Terminal Connecting Cables 7
2.4 Sensing Elements 7

Section 3.0 Theory of Operation 8

3.1 Electronic Unit 8
3.2 Cote-Shield Action 9
3.3 Sensing Element 9
3.4 Connecting Cables 10
3.5 Verify System (optional) 10

Section 4.0 Installation 12

4.1 Unpacking 12
4.2 Mounting the Electronic Unit 12
4.2.1 Installation Location and Approval Codes 12
4.3 Mounting the Sensing Element 13
4.3.1 Flush Sensing Element 14
4.4 Mounting the Verify System 15
4.5 Wiring the Electronic Unit 15
4.6 Wiring the Sensing Element 16
4.7 Wiring the Verify System 17

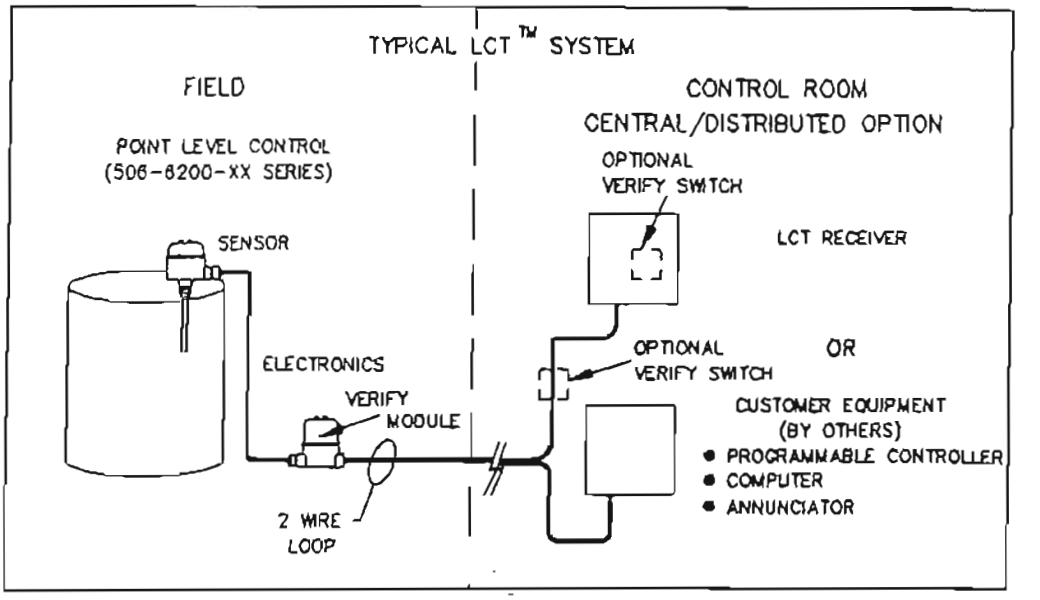

Fig. 1-1
Typical Two-Wire Point Level Control

1.0 Introduction

The instructions in this book are for the Drexelbrook two-wire, 506-6200 Series Level Control Transmitter, LCT™.

1.1 System Description

The LCT transmitter is a precision, point level, RF (Radio Frequency) analog output level control. The LCT is a two-wire control. It draws current from a remote power supply over a pair of signal wires. This current is both the output signal and the operating power for the point level transmitter.It provides a 4-10 mA output when the material being measured reaches the sensing element point in a vessel, and provides a 14-20 mA output when the sensing element is uncovered.

As an option, the 401-10-220 two-wire Verify circuit is used in conjunction with the 506-6200 Series point level controls for pushbutton verification that the entire control system is functioning properly.

An optional Drexelbrook Point Level receiver provides relay outputs for the LCT transmitter. See the appropriate receiver instruction manual.

The 506-6200 Series LCT transmitter consists of a 406-6200 Series electronic unit, a 700 Series sensing element, and a 380 Series connecting cable (if the unit is remote). See Figure 1-2. The center four digits in the transmitter model number refer to the electronic unit model. For example, 506-6200-8 indicates a standard number refer to the electronic unit model. For example, 506-6200-8 indicates a standard 406-6200 electronic unit with a 700-221-2 sensing element.

The 700 Series Cote-Shield™ sensing element is mounted in or near the material being measured and provides a change in impedance to indicate presence or absence of material. Cote-Shield allows the transmitter to ignore the effects of material build-up or coating on the sensing element.

The sensor consists of three sections; center rod (CW), ground (gnd), Cote-Shield (SH). The Cote-Shield terminal shields against the transmission of current, through a coating, from the center element to ground until the level reaches the sensing element. See Figure 1-3.

Two-Terminal insulated sensors (ground and center wire) are used when metallic contact with the process material is undesirable. See Figure 1-4.

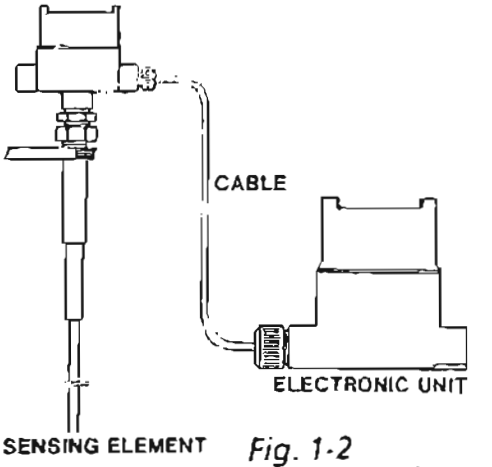

Fig. 1-2
LCT Transmitter (Remote Version)

high sensitivity (0.01 pF)	406-6220
high sensitivity with time delay	406-6222

1.3.2 Connecting Cables

For all remote systems, the transmitter electronic unit and sensing element are connected by a three terminal coaxial cable. Drexelbrook cables are available in:

General Purpose:	380-XXX-12
High Temperature:	380-XXX-18

(first 10 feet high temp.)
See Section 2.5 for temp ratings.

The XXX in the model number indicates the length of the cable. 5-foot increments up to 25 feet are standard, but cut lengths up to 150 feet are available.

1.3.3 Sensing Elements

The following sensing elements are most often recommended for use with the 506-6200 Series LCT transmitter. They are specified according to the application requirements. For identification, the last two digits of the sensing element model number are stamped on the mounting gland or flange. This listing does not include all of the sensing elements available for use with a 506-6200 Series transmitter. If you have additional questions about sensing elements, contact our local representative or the factory.

700-201-5 - *(506-6200-5)	rigid sensing element for liquids and light slurries.
700-202-2 - *(506-6200-2)	rigid sensing element for liquids, light slurries, and granulars.
700- 202-19 - *(502-6200-15)	rigid sensing element for granulars.
700-204-38 - *(506-6200-16)	rigid sensing element for liquids, slurries, and granulars in higher temperatures.
700-205-15 - *(506-6200-35)	flexible sensing element for liquids and granulars.
700-207-1 700-207-4 700-207-6 *(506-6200-20)	flush sensing element for materials in chutes.
700-221-2 - *(506-6200-8)	heavy-duty rigid sensing element for abrasive granulars.

*System Number

1.3.4 Verify System

401-10-201	Verify system (includes the following)
401-10-220	Pulse recognition module
401-10-210	Switch module

2.0 Specifications

2.1 Electronic Unit

A. Power Requirements
15 to 28 Vdc

B. Operating Temperature: -40°F to 140°F. System will operate above 140°F, but with reduced component life.

C. Sensitivity:
0.1 pF (406-6200)
0.01 pF (406-6220)

D. Operating Point Range:
0 to 90 pF (406-6200)
0 to 9 pF (406-6220)

E. Output
4-10 mA (Fail-Safe/Alarm State)
14-20 mA (Normal State)

F. Fail-Safe:
Switchable to either Low-Level Fail-Safe (LLFS) or High-Level Fail-Safe (HLFS).

G. Signal Wire Spark Protection:
10 Amperes standard.
100 Amperes optional.

H. Standard Housings for the 406-6200 Series electronic units meet the following classifications:

NEMA 1	General-Purpose
NEMA 2	Drip-Tight
NEMA 3	Weather-Resistant
NEMA 4	Waterproof
NEMA 5	Dust-Tight
NEMA 12	Industrial Use

Explosionproof for Class 1, Div. 1 & 2, Groups A, B, C, D, and Class 11, Div. 1 & 2, Groups E, F, and G.

I. Intrinsic Safety

> **WARNING**
>
> Substitution of components may impair intrinsic safety. All FM approved units should be returned to factory for repairs or FM approval may be nullified.

Sensing element and cable: Intrinsically safe in accordance with ISA standard SP12 and NFPA standard 493 for Class I, Groups A,B,C,D, Div. 1 and 2, and Class II, Groups E,F,G, Div. 1 and 2.

Transmitters: Signal wires are intrinsically safe with or without separate entity approved barriers per FM and CSA. Reference 420-1-587 CD, 420-1-588 CD and 420-1-813 CD for specific wiring requirements and details.

J. Entity Approval:

a. Model No. 406-6200 transmitters have Factory Mutual approval as being intrinsically safe when supplied from an approved intrinsically safe power source. Transmitter Entity Parameters are:

V_{max} = 40 Vdc C_i = 0.02µF
I_{max} = 225 mA L_i = 0 mH

These are the maximum voltage and current from the power source, and the internal capacity and inductance of the transmitter.

b. Entity approved power sources may have the following maximum values (max. voltage and current not to be combined):

For Groups A,B,C,D:

V_{OC} = 36 V C_A = 0.14µF
I_{SC} = 157 mA L_A = 3.4 mH

For Groups C, D only:

V_{OC} = 40 V C_A = 0.45µF
I_{SC} = 224 mA L_A = 7 mH

2.2 Verify System

A. Power Requirements: 4-20 mA recommended.

B. Operating Temperature: -40° to 140°F. Units will operate above 140°F, but with reduced component life

C. Adjustment Range (401-10-220):
.3-92 pF high range
.3-10 pF low range

3.0 Theory of Operation

3.1 Electronic Unit

As a two wire electronic unit, the LCT transmitter receives its power from and transmits its signal to a receiver over the same pair of signal wires. This signal wire input voltage is applied to a power supply which supplies both an unregulated potential (B+) and a 10 volt regulated potential which powers all other circuit blocks. See Figure 3-1.

The material in the tank is seen as an admittance in the bridge circuit. During calibration, the variable capacitor marked "operating point adjustment" is set to the point where the bridge is balanced with the material at the level where indication is desired. The balance condition exists when the probe and shield outputs of the bridge are at the same potential. The shield output is connected to the sensing element's Cote-Shield electrode via the shield conductor of the 3-terminal cable, thus enabling the sensing element to ignore coatings. (This is discussed more fully in paragraph 3.2.) A 110 kHz sinusoidal oscillator drives the bridge circuit producing a small error signal whose amplitude is directly proportional to the degree of bridge unbalance. This signal is amplified in the error amp to a level that can be processed by the detector. At the detector, the amplified error signal is compared to a signal of fixed amplitude and phase shift. The detector's output is a signal whose state is directly determined by the presence or absence of material at the sensing element trip point. An optical isolation circuit couples the output of the detector to the transmitter output circuitry while providing high voltage isolation between the probe and power circuits. The fail-safe selector includes a switch which selects the polarity of signal applied to the current sink. With the fail-safe switch, the customer can select whether he wants relay actuation at the receiver with the material level above (LLFS) or below (HLFS) the sensing element trip point. (See Section 5.2.4 for more information on the fail-safe selector.) Finally, the output of the fail-safe selector drives a current sink which draws the appropriate

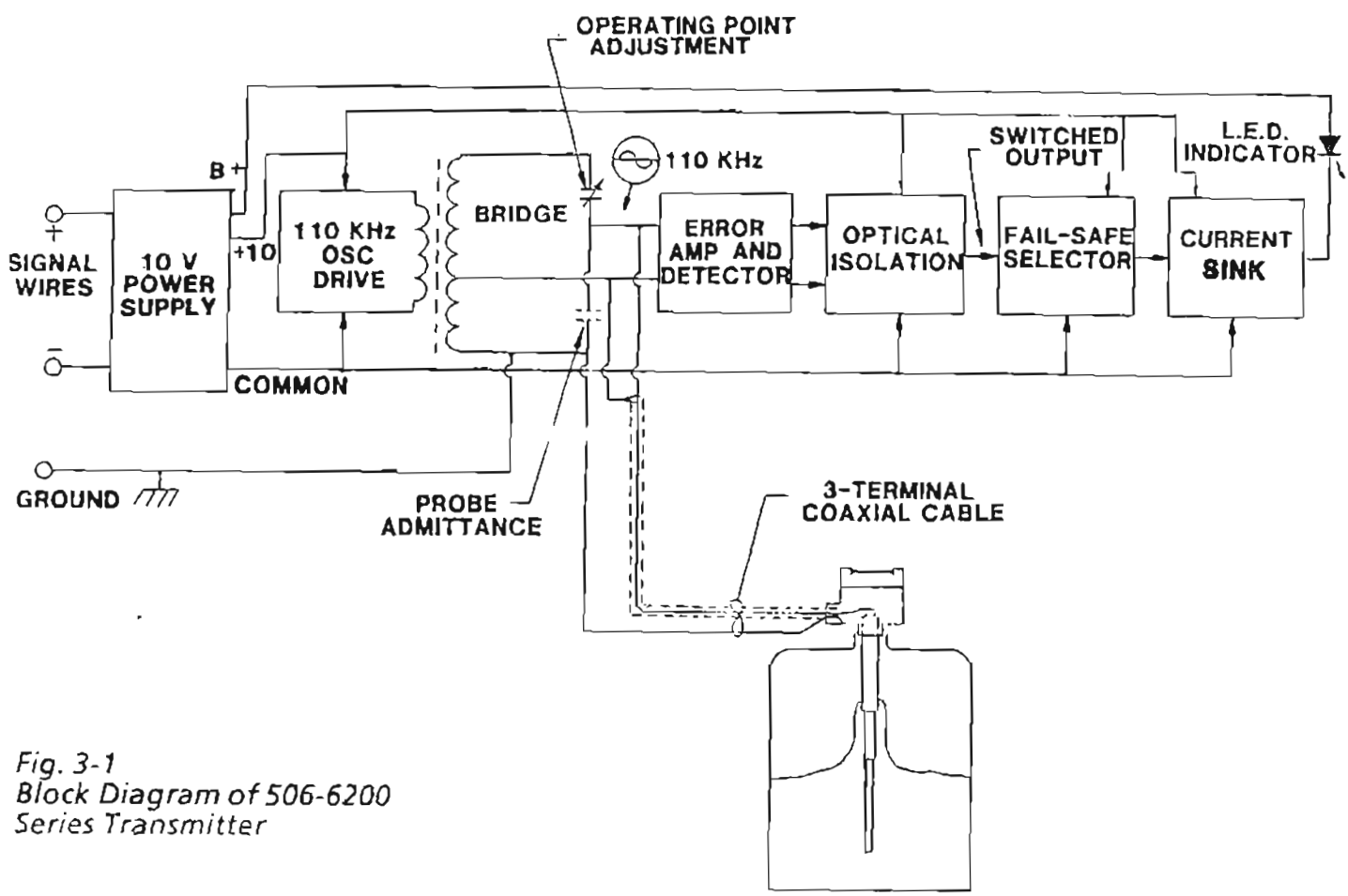

Fig. 3-1
Block Diagram of 506-6200 Series Transmitter

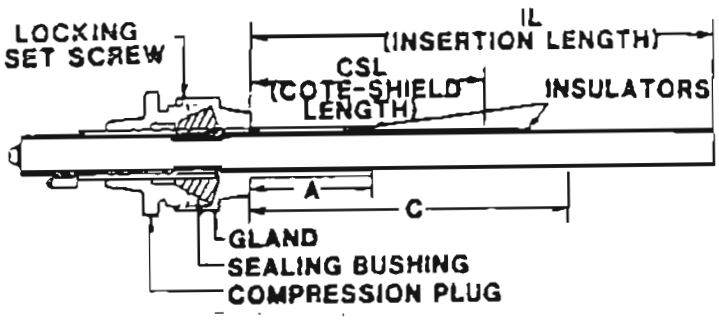

Fig. 3-3
Cote-Shield Sensing Element

A horizontally mounted sensing element has the advantage of much greater capacitance change per inch, but will always operate within a fraction of an inch from its lowest active point.

3.4 Connecting Cables

Drexelbrook LCT controls typically use three-terminal coaxial cables for connecting the sensing element to the transmitter electronic unit (406-6200 Series). The center wire of the cable carries the change in impedance signal from the sensing element to the electronic unit, while the coaxial shield eliminates any stray capacitance from the center wire to ground. As a result, the cable capacitance does not interfere with the impedance signals from the sensing element.

3.5 Verify System (optional)

The function of the 2-wire verification system is to momentarily confirm the complete operation of the high level alarm on a 506-6200 Series On/Off system. Refer to Figures 3-4 and 3-5.

By pressing the Verify switch on the 401-10-210 switch module or on any LCT receiver (optional), a momentary short circuit is created on the signal wires. The short circuit is recognized by the pulse module as a negative-going pulse. (Note that the pulse module requires a minimum voltage drop of 6.0 volts.) The pulse module will then add a predetermined (calibrated) amount of capacitance to the probe-to-ground terminals on the transmitter in order to simulate a high-level alarm condition in a tank. If the system is functioning properly, the added capacitance forces the transmitter to change its output state from normal to alarm.

When activated, the Verify function will confirm that the point level control is functioning properly. If there are <u>any</u> faults or malfunctions associated with the point level control or the calibration on the transmitter has been desensitized, <u>no</u> alarm signal will be generated when the switch is activated. The LED on the transmitter will remain "ON."

The predetermined amount of capacitance that is switched in during the system verify operation is controlled by means of an adjustment potentiometer, shown in Figure 3-6. The Verify system has the ability to check if there are defects in the coaxial cable and/or the sensing element.

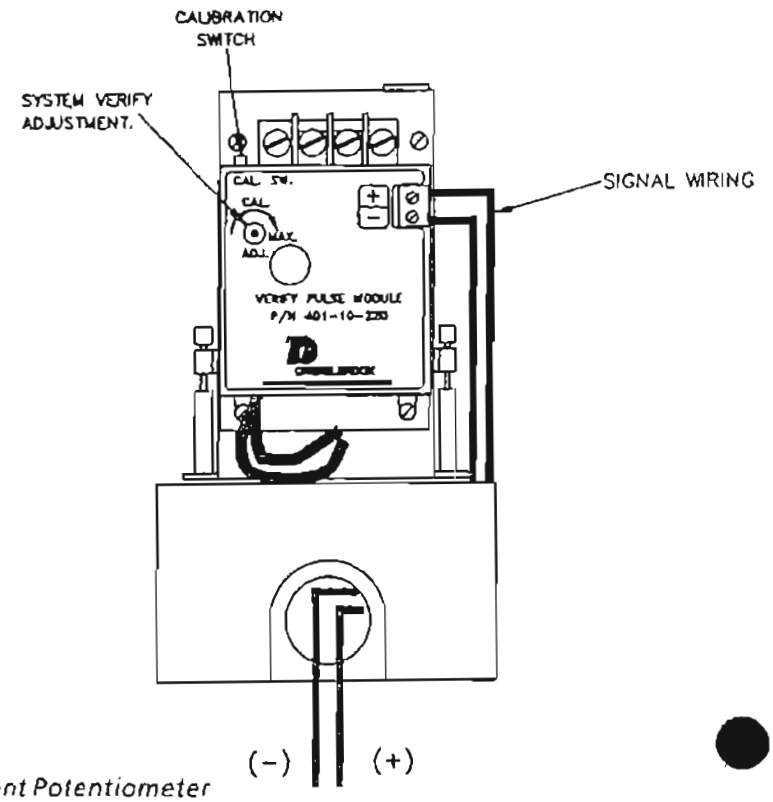

Fig. 3-6

Adjustment Potentiometer

4.0 Installation

4.1 Unpacking

Carefully remove the contents of the shipping carton and check each item against the packing list before destroying any packing material. If there is any shortage or damage, report it immediately to the factory.

4.2 Mounting the Electronic Unit

The 406-6200 Series electronic unit was designed for field mounting, but it should be mounted in a location as free as possible from vibration, corrosive atmospheres, and any possibility of mechanical damage. For convenience at start-up, place the instrument in a reasonably accessible location. Ambient temperatures should be between -40°F and 140°F (-40°C and 60°C). Integral electronics and sensor are available for quick and easy installation in application where temperature and vibration are not prohibitive. See Figures 4-1A and 4-1B.

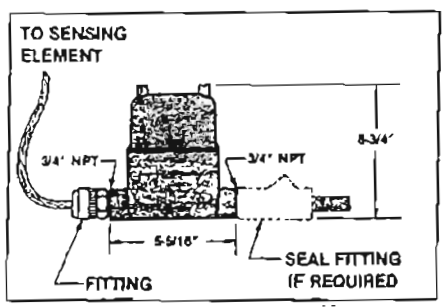

Fig. 4-1A
Mounting Dimensions
Separate Electronics

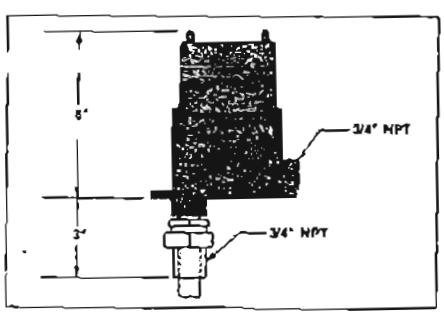

Fig. 4-1B
Mounting Dimensions
Integral Electronics

4.2.1 Installation Locations and Approval Codes

Non-Intrinsically Safe Transmitter Installations

a. These transmitters have Factory Mutual approval as associated equipment, having intrinsically safe connections to the sensing element, even if the transmitter and signal leads are not intrinsically safe.

b. With a non-intrinsically safe DC supply (which will not use or generate more than $250V_{max}$) the transmitter may be used in Class I Division 2 or in Class I Division 1 if the installation is explosionproof.

c. In Class I Division 2 the signal leads must be run in medal conduit, but conduit seals are not required except where conduit enters the non-hazardous area.

d. For Class II Group E Division 1 installations, wiring must enter the transmitter housing through dust tight cable fittings or threaded conduit for NEC.

Hazardous Area Classification

a. When connected to approved 406-6200 transmitters, Series 700 sensing elements and cable are all intrinsically safe for Division 1, Class I, II, III, Groups A-F, whether the transmitters are or are not intrinsically safe.

b. When connected to approved power sources, approved model 406-6200 transmitters are intrinsically safe for Division 1, Class I, II, III, Groups A, B, C, D or Groups C, D, depending on the power source classification.

Explosionproof Installations

For explosionproof installations, the 406-6200-F01 chassis is approved only when mounted in one of the FM approved explosionproof housings: NEMA 1, 4, 4X, 7ABCD, 9 EFG, 12, 13.

4.3.1 Flush Sensing Element

The flush sensing element should be mounted in the flow stream. Mounting the sensing element in the flow stream prevents excessive build-up of material on the face of the sensing element. Excessive build-up can occur if sensing element is protected from falling material, as shown in Figure 4-3A. The sensing element is built to withstand the impact of coal, rock, wood, chips, etc. Figure 4-3B shows the recommended sensor location at top of chute. For recommended sensor location at bottom of chute see Figure 4-3C. Low level sensors typically see enough flowing material that location is not as critical. Figure 4-3D shows the recommended sensor location in an angle chute.

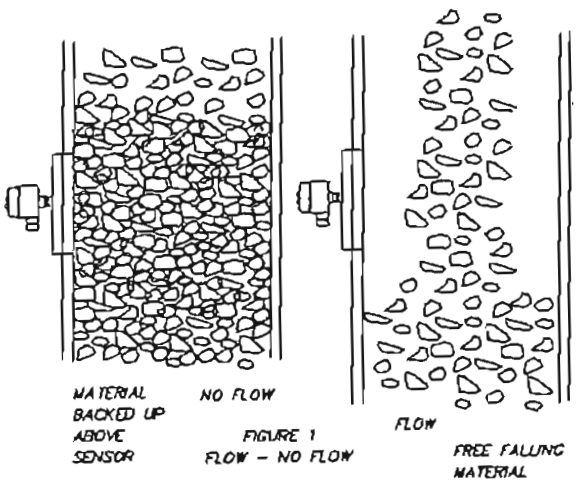

Fig. 4-3A
Flow Build-up on Sensor

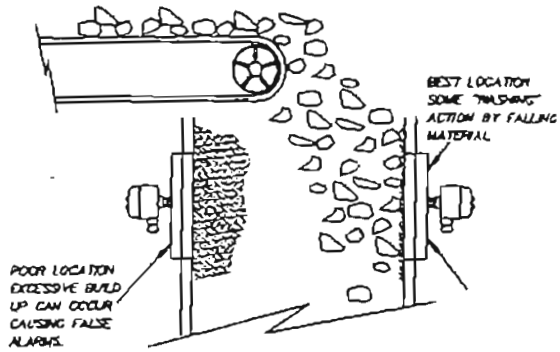

Fig. 4-3B
Vertical Chute, High Level Sensing Element Location

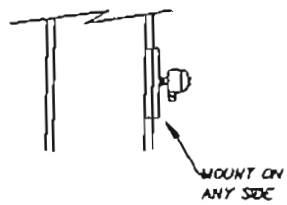

Fig. 4-3C
Vertical Chute, Low Level Sensing Element Location

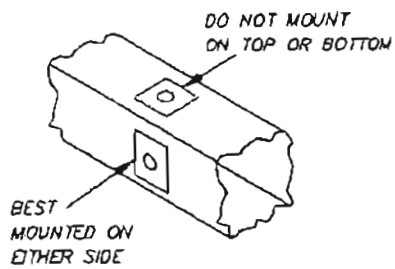

Fig. 4-3D
Sensor Location, Angle Chute

4.6 Wiring the Sensing Element

> **Note:** Only Drexelbrook coaxial cables (Series 380) should be used to connect the electronic unit to the sensing element. Use of other cables could result in damage to the unit. *Never* splice cables. Do not shorten or reterminate cables without using the Drexelbrook termination kit (#389-1-6).

For sensing elements that are to be mounted remotely from the electronic unit cable connections are made to the sensing element after it has been installed in the vessel, with the condulet attached. Again, these connections are GND, SH, and CW. See Figures 4-8A and 4-8B. For two-terminal insulated sens-ing elements, the SH connection must be clipped and insulated at the sensing element condulet so it cannot short to either terminal. Integral and close-coupled models are wired at the factory prior to shipping.

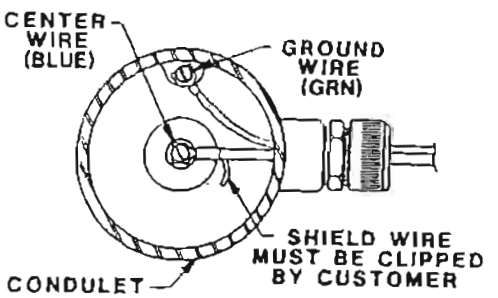

Fig. 4-8A
Cable Connections to a Two-Terminal Sensing Element

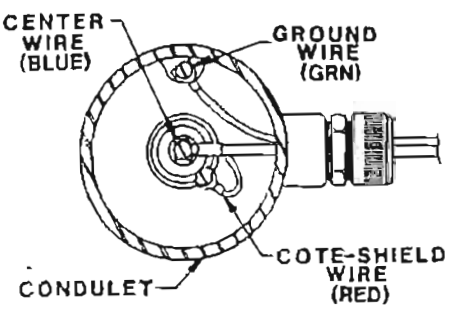

Fig. 4-8B
Cable Connections to a Three-Terminal Sensing Element

Applications involving insulating granulars and some insulating liquids may require extra spark protection against the discharge of static sparks that can damage the electronic unit. Heavy duty spark protection circuits are typically mounted in the sensing element condulet. See Figure 4-9.

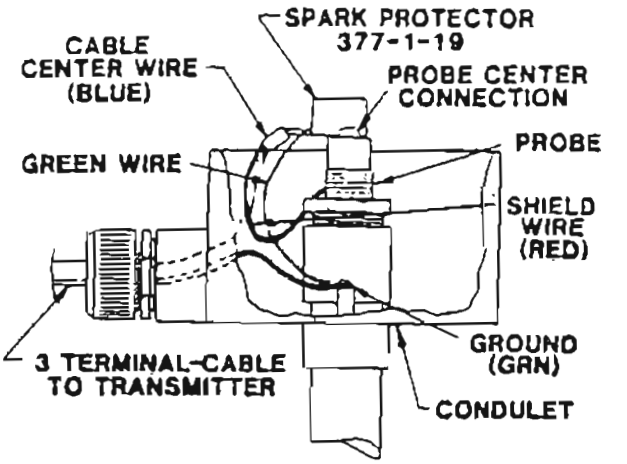

Fig. 4-9
Installing the Spark Protection Circuit

If spark protection is supplied, use the following instructions for installing the spark protector in the sensing element condulet.

A. Attach the mounting link on the spark protector to the sensing element center connection screw.

B. Connect the green wire from the spark protector to the condulet ground screw.

C. Feed the cable into the condulet.

D. Connect the cable centerwire (CW) to the spark protector, and the cable ground wire (GND) to the ground screw as shown.

E. Connect the shield wire (SH) to the Cote-Shield terminal.*

*For sensing elements that do not have shield connections, clip the shield wire at the condulet and tape it so it will not short to anything.

5.0 Calibration/Operation

5.1 Start-Up

Before applying power to both the transmitter and receiver, check the wiring connections. See Sections 4.5 through 4.7. Also see Receiver Instruction Manual.

> Note: For maximum overfill security, Verify system should be checked and certified by a Drexelbrook authorized technician.

> Warnings: *Units in Hazardous Areas*. If the signal wiring is not intrinsically safe, the area must be checked and known to be non-hazardous before removing the explosion-proof housing cover to calibrate the unit When calibration is complete, the cover must be replaced.
>
> Each lead from the explosionproof case must be equipped with an approved seal fitting.

Signal wiring and instruments are not intrinsically safe unless: (1) The power source is approved as intrinsically safe for this instrument in the hazardous atmosphere in which it will be used; and (2) the signal wiring is done in accordance with the National Electrical Code.

5.2 Control and Adjustments

5.2.1 Setpoint Adjustment Without Verify System

There is a single adjustment located on top of the electronic unit chassis that controls the level at which the LED on the top of the electronic unit operates. See Figure 5-1.

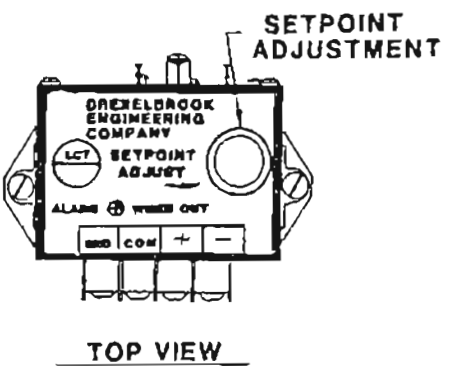

Fig. 5-1
Setpoint Adjustment

> Note: The LED on the electronic unit is out when the output signal is 4-10 m (fail-safe/alarm state). See Receiv Instruction Manual.

Each revolution of the setpoint adjustment will change the operating point approximately 3 pF (.3 pF if using a 406-6220, high sensitivity unit). Turning the adjustment clockwise will raise the level at which the LED operates, and turning it counter-clockwise will lower the level at which the LED operates.

5.2.2 Setpoint Adjustment with Verify System

The system verify adjustment is located on the front of the transmitter. The verify adjustment is activated by simultaneously holding down the CAL button on the transmitter and rotating the screw adjustment. Refer to Figure 5-2. See Section 5.5 for complete calibration procedures

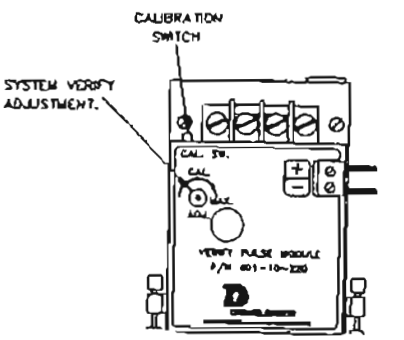

Fig. 5-2
Verify Adjustment

5.2.3 Time Delay Control

The time delay control is located on top of the electronic unit, across from the setpoint adjustment. See Figure 5-3. It is used to help stop variations in output due to agitation or frothing in the vessel. The standard time delay is 0-90 seconds, and is represented by a number 2 in the seventh digit from the left in the electronic unit model number. Example: 406-62X2-XX.

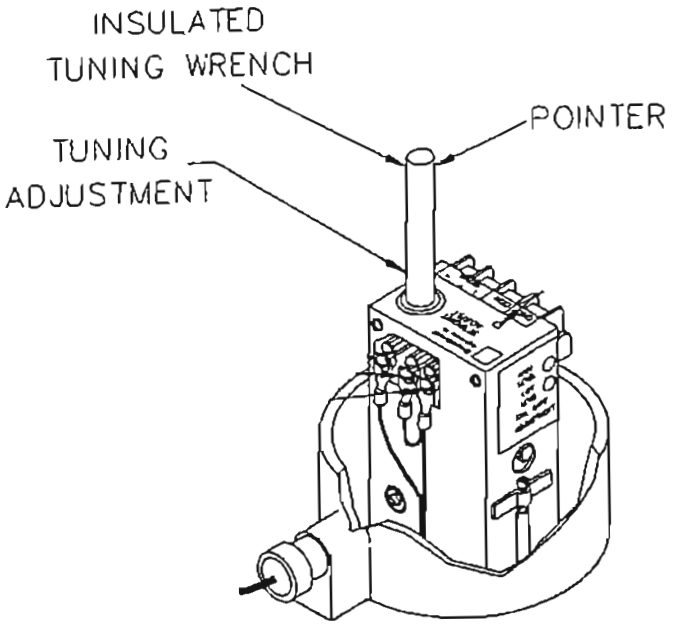

Fig. 5-5
Insulated Calibration Tool

A. Be sure that the level is well below the end of the sensing element. See Figure 5-6.

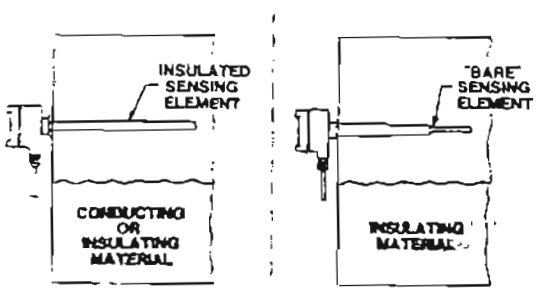

Fig. 5-6
Horizontal Mount with Level Below the Sensing Element.

B. Using the insulated tool supplied with the instrument, turn the setpoint adjustment to the full counterclockwise (CCW) position. See Figure 5-5.

C. Turn the adjustment slowly clockwise (CW) unit the LED just changes states.

D. Mentally note the position of the adjustment tool pointer.

E. Increase the material level until it is well above the sensing element. See Figure 5-7.

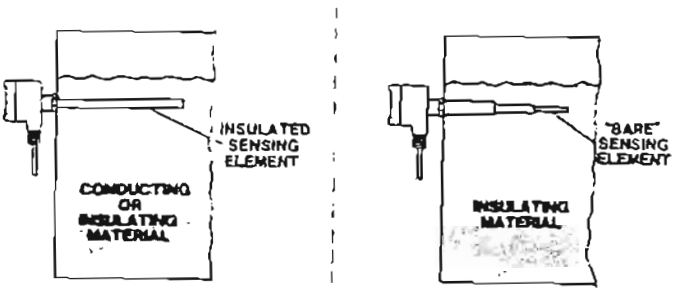

Fig. 5-7
Horizontal Mount with Level Above the Sensing Element.

F. Counting the number of turns, turn the adjustment slowly clockwise (CW) until the LED once again just changes states (or you come to the end of the adjustment travel).

G. Turn the adjustment back counterclockwise (CCW) half the number of turns that were counted.

H. For recalibration purposes, record half the number of turns that were counted as "Preload". See Section 5.6.

Calibration is complete.

Note: If less than 1/4 turn of the adjustment was observed between the points where the sensing element was covered and uncovered, please consult factory.

5.3.5 Calibration of Flush Sensing Element

A. **Blind Calibration High Level Fail Safe:** (Alarm when chute is full at sensor). See Figure 5-9.

When calibrating a high level fail safe system it is important to follow the correct procedure. Start with the sensing element uncovered (no material at sensing element) and the tuning adjustment full counter clockwise. At this point the LED will be out. Start turning the adjustment clockwise until the LED turns on.

Test unit by turning the adjustment counter clockwise, then clockwise to determine the differential of the electronics. If the turn-on and turn-off of the LED is greater than 1/4 turn, the unit is not operating correctly, call the factory service department at 1-800-527-6297. This is a simple function test of the electronics.

If this operation is satisfactory, then continue turning the tuning adjustment:

A. Clockwise (1) one turn for granulars containing moisture.

B. Clockwise (1/2) one half turn for dry insulating powders.

This completes calibration of the high level fail safe flush system.

B. **Blind Calibration Low Level Fail Safe:** (Alarm when chute is empty at sensor). See Figure 5-9.

When calibrating a low level fail safe system, start with the sensing element uncovered (no material at sensing element) and the tuning adjustment full counter clockwise. At this point the LED will be on. Turn tuning adjustment clockwise until the LED is off.

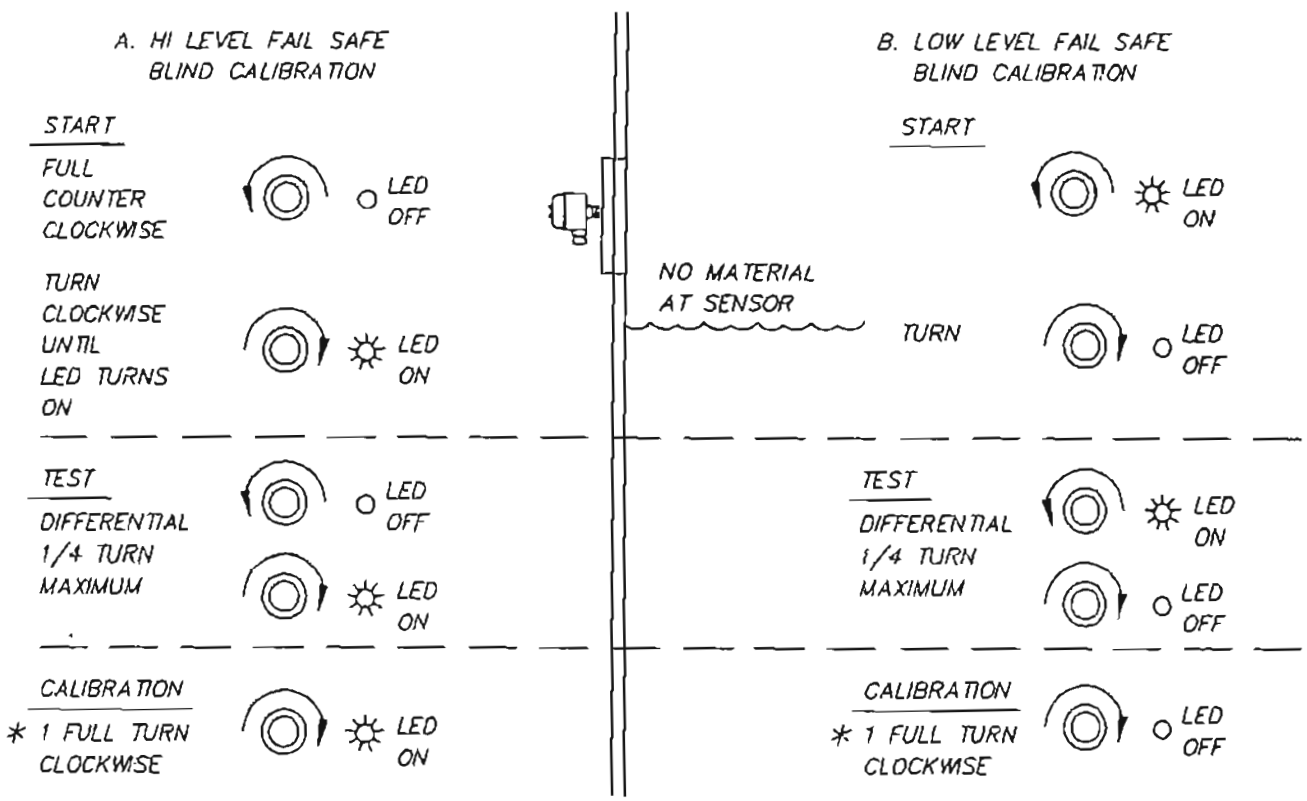

Fig. 5-9
Calibration of Flush Sensing Element

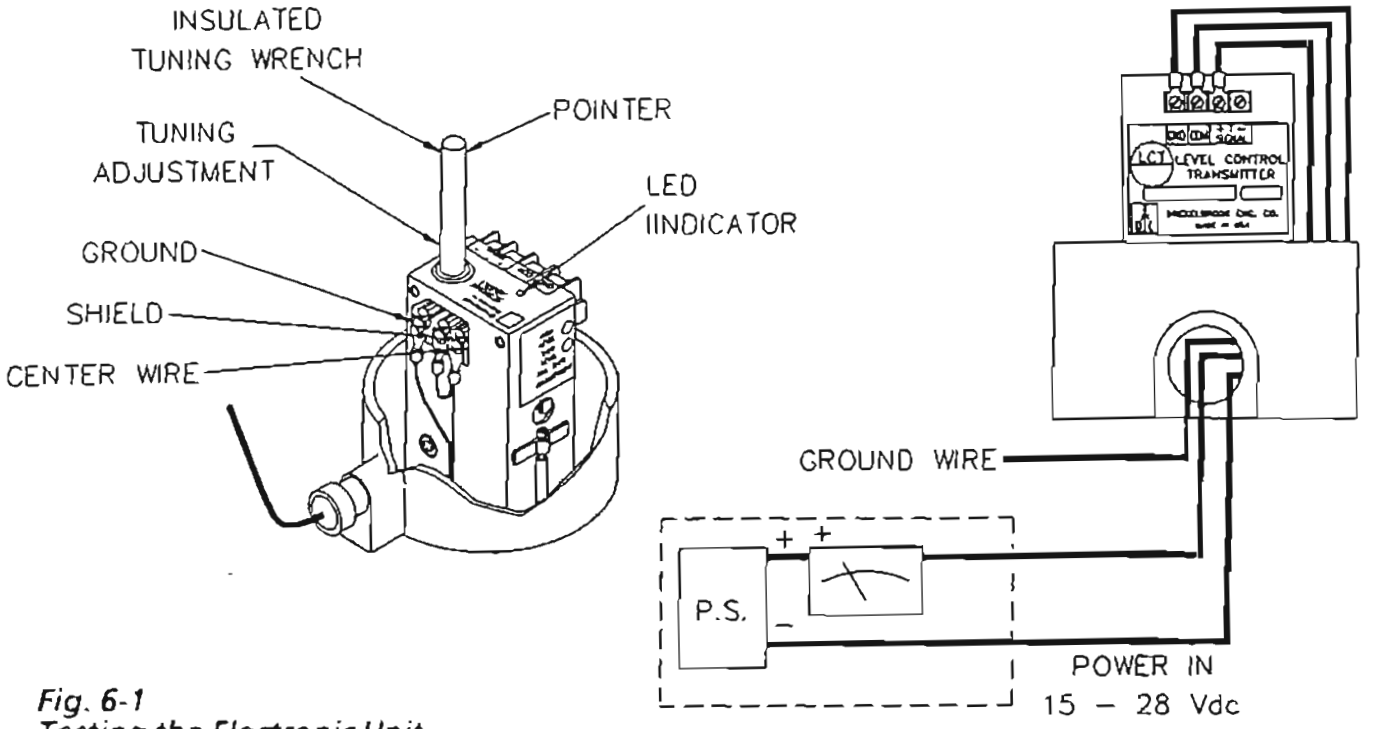

Fig. 6-1
Testing the Electronic Unit

6.0 Troubleshooting

6.1 Introduction

The LCT Series instruments are designed to give years of unattended service. No periodic or scheduled maintenance is required.

A spare electronic chassis is recommended for every 10 units so that, in case of a failed unit, a critical application will not be held up while the unit is returned to the factory for repair.

If a difficulty should occur when operating your measurement system, divide the system into its component parts and test each part individually for proper operation.

The troubleshooting procedures listed here should be followed in checking out your system. If attempts to locate the difficulty fail, notify your local factory representative or call the factory direct and ask for the service department.

WARNING

Any adjustment of the operating point on the Verify system will invalidate Drexelbrook overfill certification. Please contact factory for information.

6.2 Testing the LCT Electronics (406-6200 Series)

a. Remove the sensing element cable and the two signal wires.

b. Connect a 15-28 VDC power supply and meter or calibration system as shown in Figure 6-1.

c. Starting from the full counterclockwise (CCW) position of the operating point adjustment, start turning clockwise until the LED indicator changes state.

d. The meter should indicate 4-10mA with the LED off, and 14-20 mA with the LED on.

e. The rotation of the adjustment should be approximately 1/8-turn between LED ON and LED OFF.

6.3 Testing 406-6200 Electronics with Verify System

The primary function of the Verify system is to check operation of complete on-off overfill system.

If system fails to respond to Verify input:

6.4.2 Level Above the Sensing Element

a. Repeat Step A in Section 6.4.1 with level covering the sensing element. See Figure 6-3.

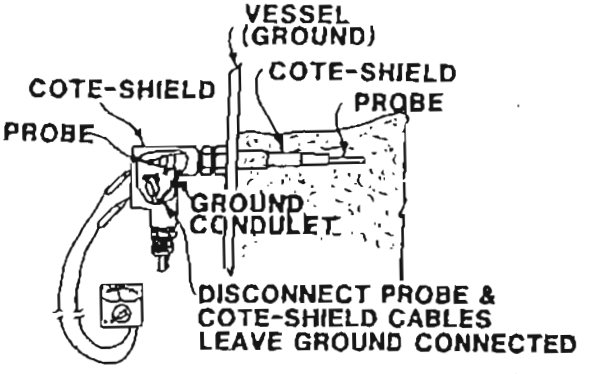

Fig. 6-3
Testing the Sensing Element with Level Above the Probe

b. Compare these resistance values with the minimum resistance numbers in Step D, Section 6.4.1.

c. If the measurement resistance values are lower than recommended, contact the factory service department.

6.6 Possible Problems with Probable Causes

Symptoms	Possible	Checkout
1. Transmitter can't be calibrated.	a. Open in coax cable. b. Coax cable not properly connected. c. Insufficient signal from sensing element. d. Transmitter needs padding capacitor.	a. Sec. 6.5 b. Sec. 4.5 & 4.6 c. Sec. 6.4 d. Sec. 6.2
2 Transmitter gives false alarm.	a. Improper calibration. b Lose wiring.	a. Sec. 5.3 b. Sec. 4.5 & 4.6
3. Transmitter operates intermittently.	a. Improper calibration. b Loose wiring	a Sec. 5.3 b. Sec. 4.5 & 4.6

EXHIBIT E-9

TYPICAL VENTS AND CONVERSATION VENT SPECIFICATIONS

SENTRY TANK ACCESSORIES' CONSERVENTS T.M.

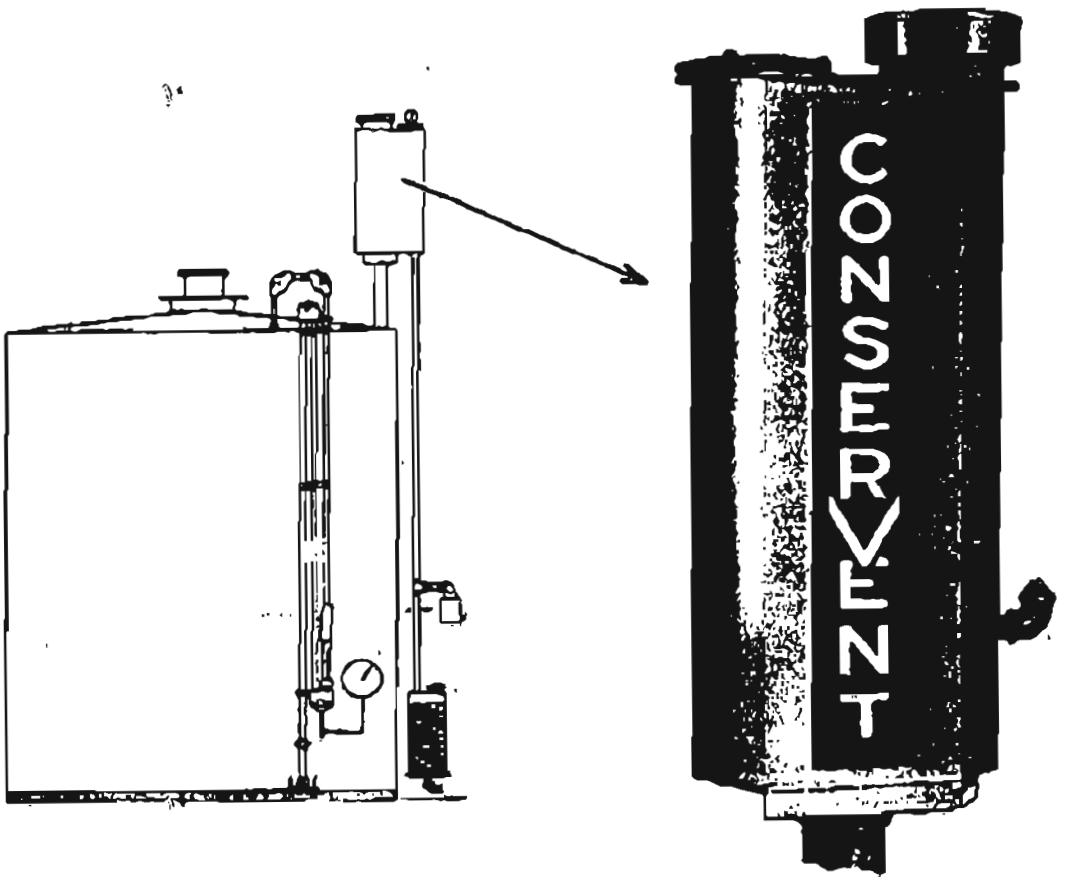

SENTRY
TANK ACCESSORIES, INC.
3000 N. CARNATION STREET · FRANKLIN PARK, IL 60131

SENTRY TANK ACCESSORIES' CALCIUM CHLORIDE DRYERS AND SAFETY SEALS

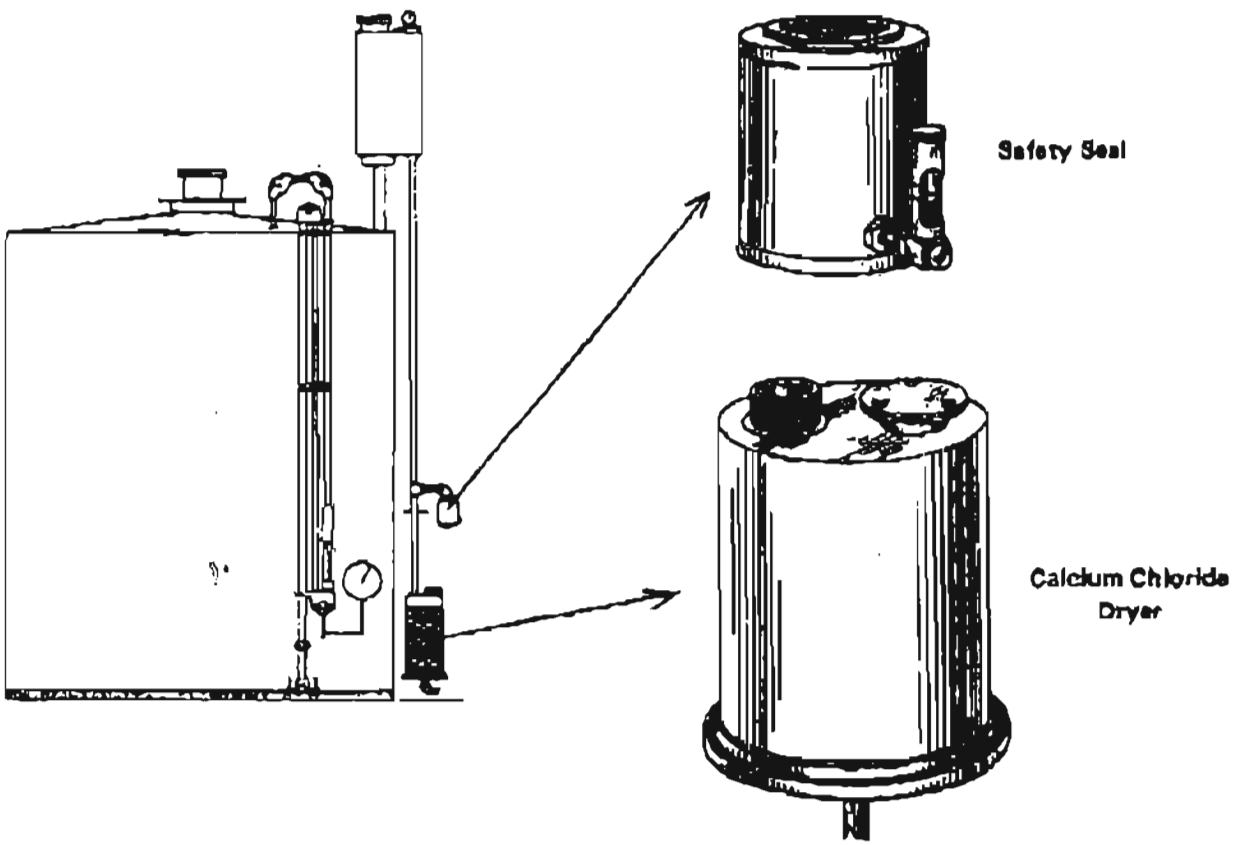

SENTRY
TANK ACCESSORIES, INC.

DEPEND ON SENTRY...TO ELIMINATE UNWANTED MOISTURE FROM ENTERING YOUR STORAGE TANKS.

SENTRY'S Calcium Chloride Dryers included in the Vapor Control System add protection against damages caused by moisture mixing with your products and internal rusting of your steel tanks.

SENTRY'S Calcium Chloride Dryer contains WALNUT LUMP CALCIUM CHLORIDE which absorbs moisture drawn into your tank during unloading or when atmospheric conditions create thermal contraction.

SENTRY'S Dryers are available in three sizes. The size of the Dryer should be based on the size of the tank, the activity of the tank and the weather conditions throughout the year. The larger the tank, the more activity and the higher temperatures and humidity level you have, the larger the Dryer should be. The chart below gives the Dryer specifications. All Dryers are constructed of 18 gauge carbon steel.

STANDARD SPECIFICATIONS FOR CALCIUM CHLORIDE DRYERS

ITEM NO.	EXTERIOR FINISH	CAPACITY OF CALCIUM CHLORIDE	A - PIPE CONNECTION	B - FILL CAP	C - DIAMETER	D - HEIGHT	E - DRAIN
5002	ENAMEL	10 LBS.	2"	2"	7-1/2"	18"	1/2"
5002G	GALVANIZED	10 LBS.	2"	2"	7-1/2"	18"	1/2"
5004	ENAMEL	80 LBS.	4"	4"	16"	20"	1/2"
5004G	GALVANIZED	80 LBS.	4"	4"	16"	20"	1/2"
5104	ENAMEL	180 LBS.	6"	6"	20"	30"	1/2"
5104G	GALVANIZED	180 LBS.	6"	6"	20"	30"	1/2"

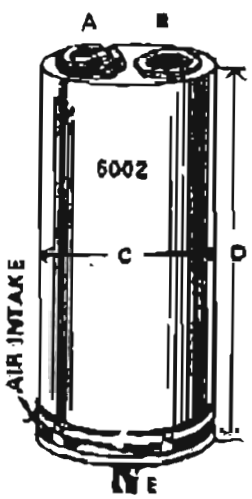

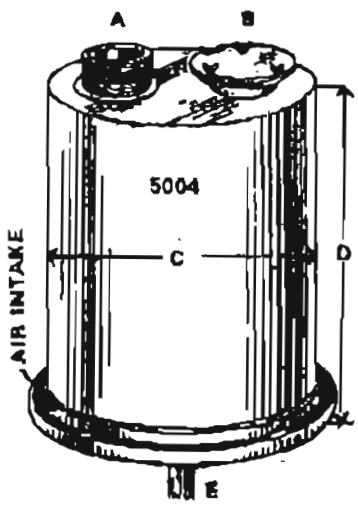

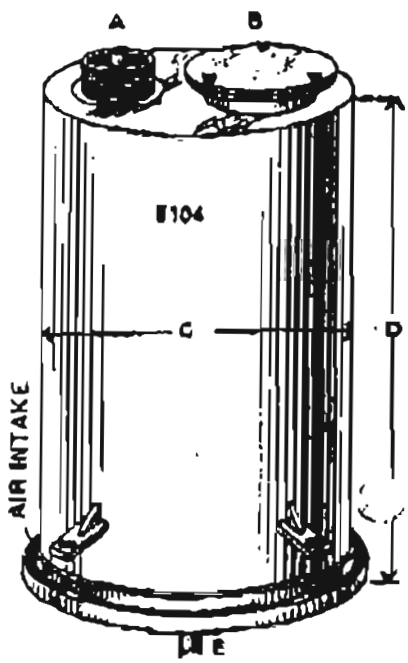

ACCESSORIES

CALCIUM CHLORIDE:

WALNUT LUMP CALCIUM CHLORIDE is a dissipating desiccant which will not "cake" or "channel" as may happen with flakes or pellets. If "caking" or "channeling" does occur, the air flow intake may be obstructed and create a vacuum, possibly leading to tank collapse.

Maintaining the proper level of WALNUT LUMP CALCIUM CHLORIDE in your Dryer is important to prevent internal rusting of the tank and water contamination of the product. A solid bed of WALNUT LUMP CALCIUM CHLORIDE, not greater than 3" from the top, should be maintained so effective drying of the air is achieved.

A special blend of Calcium Chloride yields a maximum absorption of up to six pounds of water per pound of Calcium Chloride.

SENTRY stocks WALNUT LUMP CALCIUM CHLORIDE in 4 different package quantities:

Item No. 5035 — 10 lb. package

Item No. 5015 — 15 lb. package

Item No. 5050 — 50 lb. package

Item No. 5350 — 400 lb. drum

SCOOPS:

Instead of pouring the Walnut Lump CALCIUM CHLORIDE directly from the package into the Dryer, use SENTRY'S Polyethylene Scoop because it makes filling the Dryer easier.

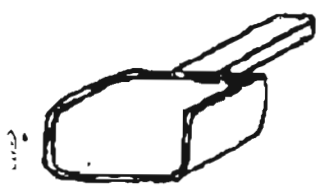

Item No. 3633 8" x 9" POLYETHYLENE

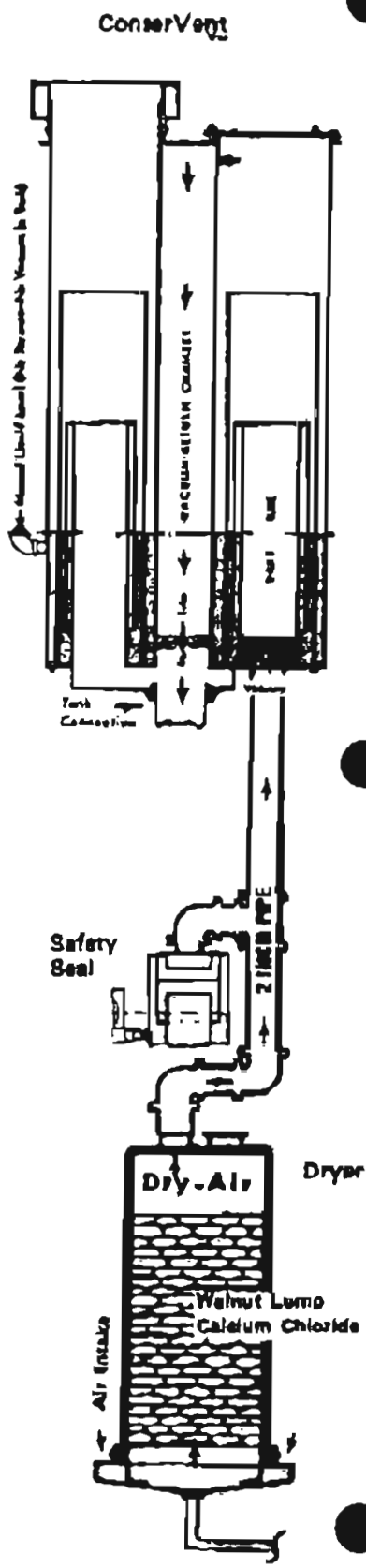

DEPEND ON SENTRY...TO HELP PREVENT YOUR TANK FROM COLLAPSING.

The Safety Seal prevents the tank from collapsing if the dryer air inlet becomes obstructed with snow, ice, leaves or other foreign matter. If an obstruction occurs, the Safety Seal allows air into the ConserVent™ system, bypassing the dryer, and permits the tank to breathe in.

Safety Seals, made of carbon steel, are sealed with SENTRY oil during normal operating conditions.

CUTAWAY OF 5012

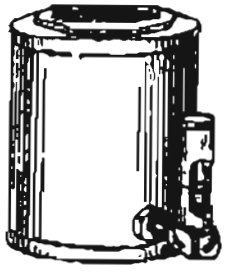

ITEM NO. 5012
2" Pipe Connection
1/2 Qt. SENTRY Oil Required

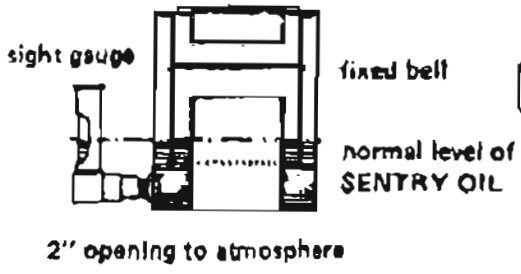

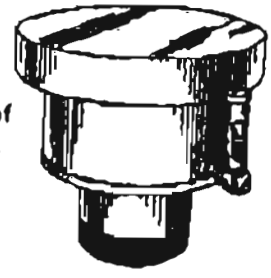

ITEM NO. 5013
3" Pipe Connection
1 Qt. SENTRY Oil Required

ACCESSORIES

SENTRY Oil Item No. 5023 1 Qt. can

WARRANTY: SENTRY Tank Accessories warrants against defects in material or workmanship under normal use and service for a period of two years from shipment. Contact us for details.

For Further Information, Contact Sentry Or Your Local Distributor

SENTRY
TANK ACCESSORIES INC.
3800 N. CARNATION STREET • FRANKLIN PARK, IL 60131

Printed in U.S.A. Form 731

DEPEND ON SENTRY . . . FOR CONTROLLED EVAPORATION AND VENTING!

5032

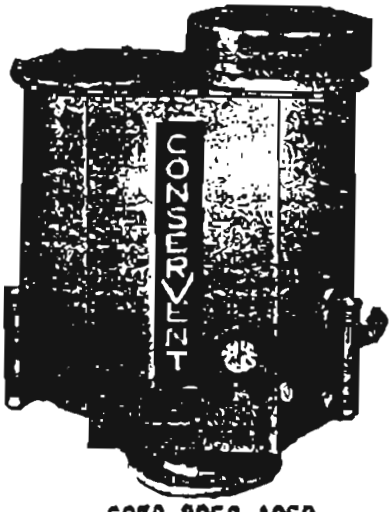

6050, 8050, 1050

A quality vapor control system on any liquid storage tank will minimize these undesirable problems.

1) Loss Of Product Due To Evaporation
2) Internal Moisture Leading To Tank Corrosion or Product Contamination
3) Tank Damage Due To Excessive Internal Tank Pressure Or Vacuum

SENTRY'S unique ConserVent™ is the cornerstone of a well-designed vapor control system.

ConserVents maintain a very slight pressure or vacuum in the storage tank. When changes between the internal pressure of the tank and the outside atmospheric pressure occur, the internal cyclinders, called bells, automatically react to offset these changes.

BENEFITS:

- ConserVent provides, by the weight of one of its bells, controlled evaporation until pressure in tank reaches 4 oz. PSI or more. Once tank pressure exceeds 4 oz. PSI, the bell will rise above the liquid seal (a mixture of ConserSeal and water) allowing excess pressure to escape from tank through vent opening. ConserVent relieves tank pressure during loading of tank or when atmospheric conditions create thermal expansion.
- ConserVent preserves product quality by venting above the liquid seal. This type of venting ensures that the liquid seal does not become mixed with your stored products.
- Conservent prevents tank from bursting because it freely relieves pressure which has built up due to loading or thermal expansion.

INFORMATION SENTRY NEEDS TO HELP YOU DETERMINE PROPER SIZING OF CONSERVENTS FOR YOUR TANKS

- Product
- Tank Capacity, All Dimensions
- Maximum Safe Pumping Rate — In & Out (Present/Future)
- Type of Tank
- Size of Vent Connection

ConserVent Specifications

Item #	Finish	Max. FLOW RATE IN AND OUT OF TANK	Tank Conn.	Width	Length	Height	Weight
5032	ENAMEL	UP TO 400 GPM	3" THREADED	5"	13"	34"	80 LBS.
5032G	GALVANIZED						
6050	ENAMEL	UP TO 500 GPM	6" FLANGED	11"	23"	36"	142 LBS.
6050G	GALVANIZED						
8050	ENAMEL	UP TO 800 GPM	8" FLANGED	15"	31"	38"	232 LBS.
8050G	GALVANIZED						
1050	ENAMEL	UP TO 1,000 GPM	10" FLANGED	18"	37"	42"	292 LBS.
1050G	GALVANIZED						

HOW THE CONSERVENT WORKS

The ConserVent allows a very low pressure or a very slight vacuum in the storage tank. When changes in the internal pressure of the tank occur, caused by fluctuations in external temperature or quantity of product in tank, the internal cylinders of the ConserVent, called bells, react to offset this change.

When internal tank pressure increases, caused by the rising of the external temperature or filling of tank, the bell on the Pressure side will rise to neutralize this pressure change. If the pressure increase is more than the bell can accommodate, the bell will rise above the liquid seal, allowing the vapor pressure to "burp" through open ports in the inner sleeve. The bell drops into the liquid seal, when pressure decreases, to reestablish a vapor tight system.

When outside temperature drops or product is withdrawn from tank, the Vacuum bell will rise. As the vacuum increases, the bell will rise above the liquid seal and allow air into the tank through the ConserVent. When the vacuum decreases, the bell drops into the liquid seal to reestablish a vapor control system.

Pressure and vacuum relief is controlled only by the bells, which are the only moving parts in the ConserVent. ConserVents, unlike other pressure relief or vacuum breaker devices that use springs, levers and mechanical seats that may jam or wear out, rely solely on the bells and liquid seal to maintain a controlled venting operation with minimal maintenance.

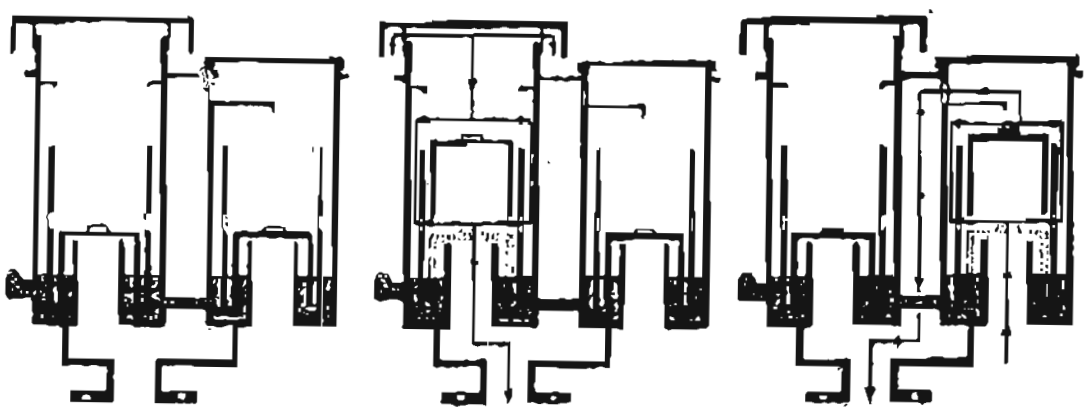

NORMAL CONDITIONS — RELIEVING TANK PRESSURE — RELIEVING TANK VACUUM

SENTRY'S ConserVents are constructed of 16 gauge carbon steel and are also available, on request, in stainless steel.

Standard construction of the internals of the ConserVent, the bells, are as follows:

Pressure Bell:	Carbon Steel
Vacuum Bell:	Brass

Stainless steel and hot dipped galvanized steel pressure bells are also available upon request.

ACCESSORIES

ConserSeal:

ConserVents use a combination of ConserSeal, Item #5040, and water to create the liquid seal. Other vents typically use elastomers which may crack, wear out or separate from the metal pallet. Refer to the first column in the chart below to select the proper liquid seal mixture.

WINTER/SUMMER LIQUID SEAL MIXTURES FOR SENTRY CONSERVENTS

Lowest Recorded Temperature In Your Region	Liquid Seal Mixture		% ConserSeal	% Water
To −34°F/−38°C	50/50		50	50
To −62°F/−52°C	60/40	winter	60	40
To −90°F/−88°C	70/30		70	30
To − 8°F/−22°C	100	summer	100	0

ConserSeal available in 1 gallon bottles Item #5040

Compound Gauge:

HELP KEEP YOUR VAPOR SYSTEM PRESSURE TIGHT WITH SENTRY'S COMPOUND GAUGE

SENTRY'S Compound Gauge, installed on your ConserVent, enables you to determine the integrity of your tank's vapor system by indicating a pressure or vacuum reading. The pressure or vacuum reading measures the tank's internal atmospheric pressure or vacuum. In the event the Gauge reads "Zero", there exists the possibility of a leak in the vapor system of your tank. If Gauge continues to read "Zero" for a long period of time, steps should be taken to locate and correct the leak. Remember, as long as the internal atmosphere of your tank is under a slight pressure or vacuum, the products you store in your tank are not escaping through evaporation.

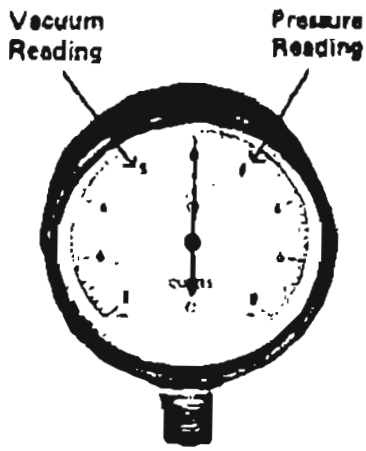

#5000 Compound Gauge

WARRANTY: SENTRY Tank Accessories warrants against defects in material or workmanship under normal use and service for a period of two years from shipment. Contact us for details.

For Further Information, Contact Sentry Or Your Local Distributor

SENTRY
TANK ACCESSORIES INC.
3800 N. CARNATION STREET • FRANKLIN PARK, IL 60131
TELEPHONE (847) 671-5650 FAX (847) 671-7886

Printed in U.S.A. Form 730

ConserVent Installations
T.M.

VENTING UNDERGROUND TANK LOCATED NEXT TO BUILDING

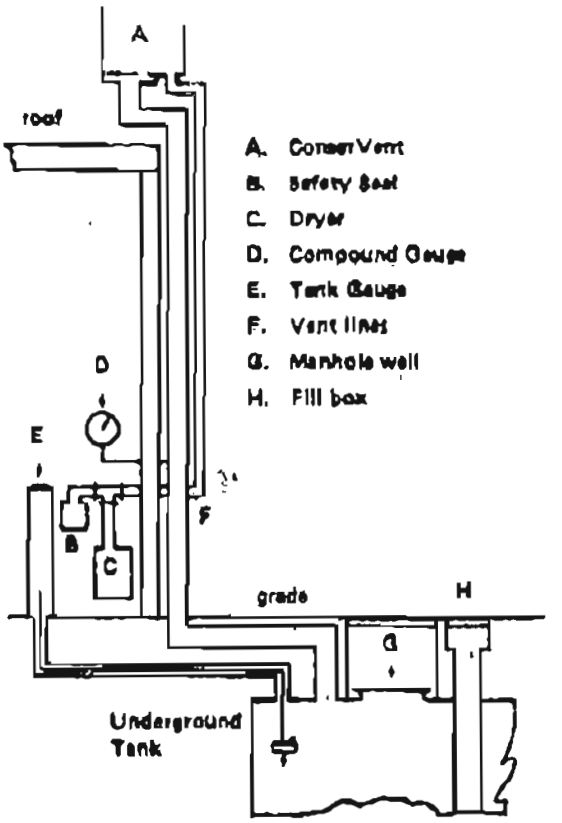

SMALL TANK WITH DRYER

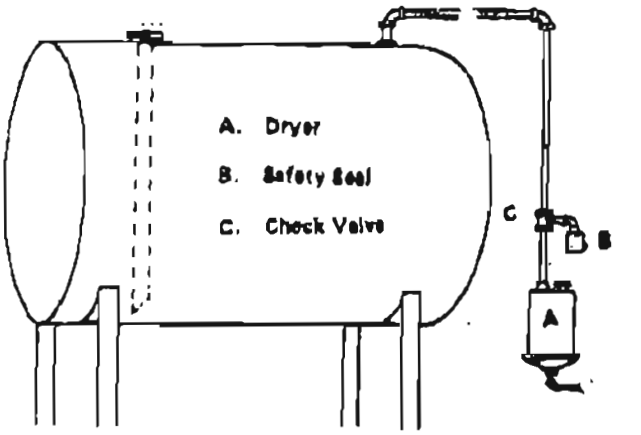

VENTING TWO TANKS WITH ONE DRYER

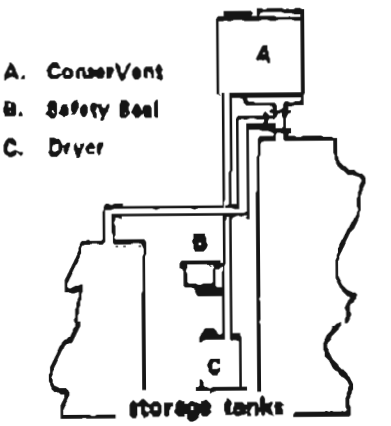

VENTING TWO TANKS WITH TWO DRYERS

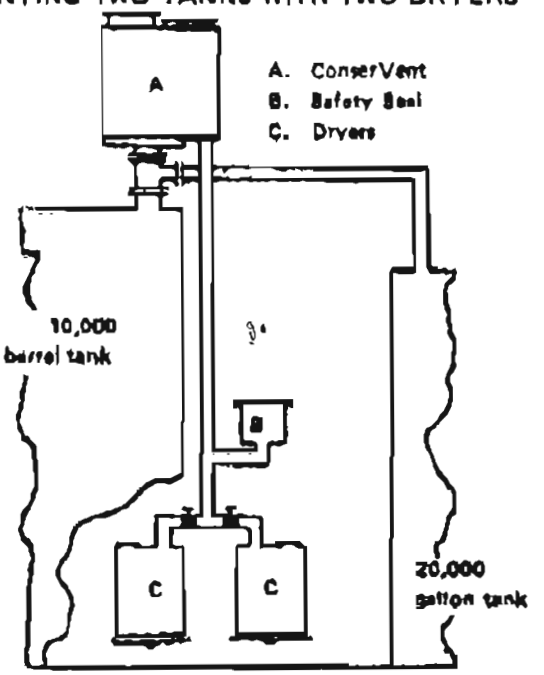

VENTING BULK STORAGE TANK

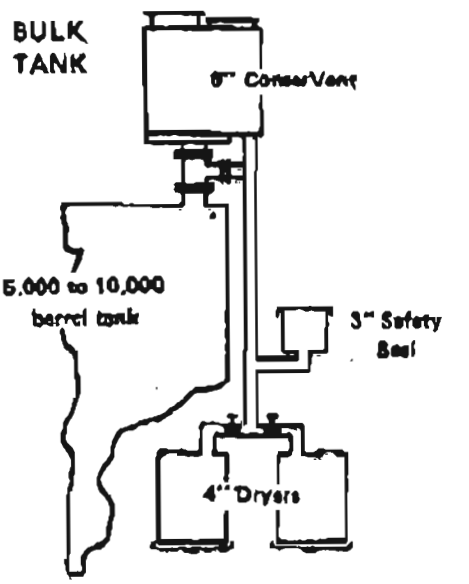

Schematic Diagrams For

VENTING THREE TANKS

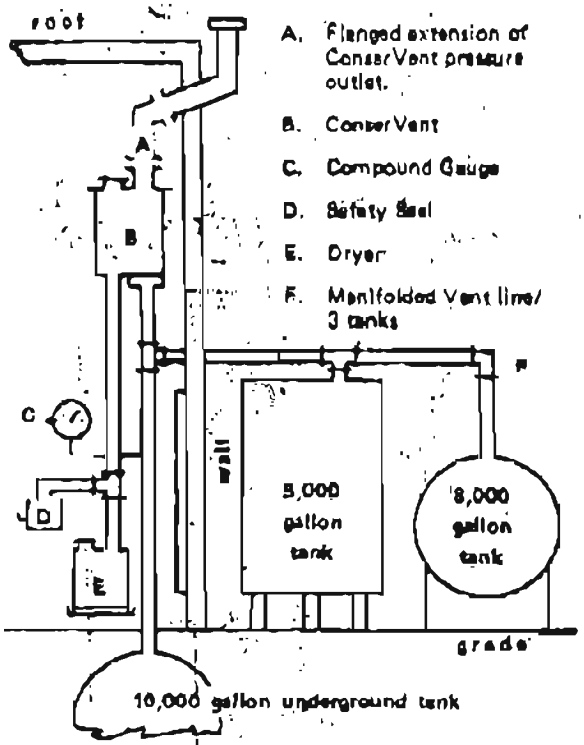

A. Flanged extension of ConserVent pressure outlet.
B. ConserVent
C. Compound Gauge
D. Safety Seal
E. Dryer
F. Manifolded Vent line/ 3 tanks

VENTING TANK INSIDE BUILDING

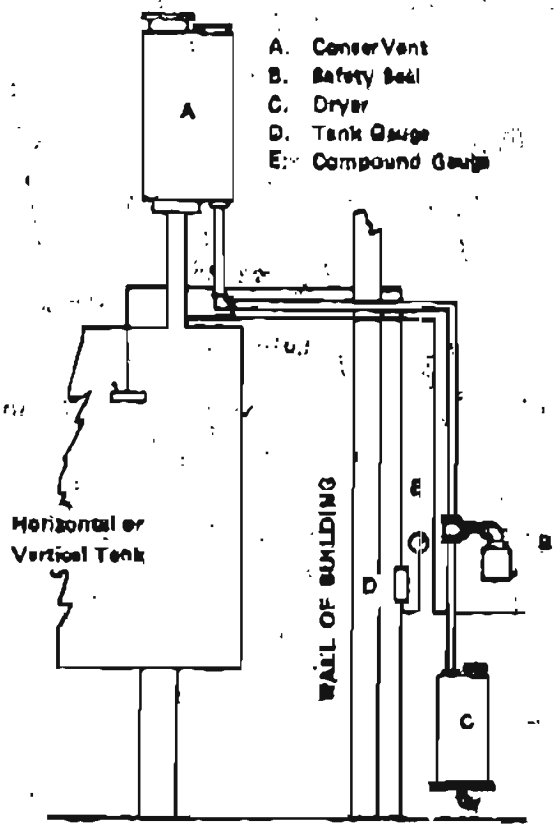

A. ConserVent
B. Safety Seal
C. Dryer
D. Tank Gauge
E. Compound Gauge

VENTING TWO COMPARTMENT TANK

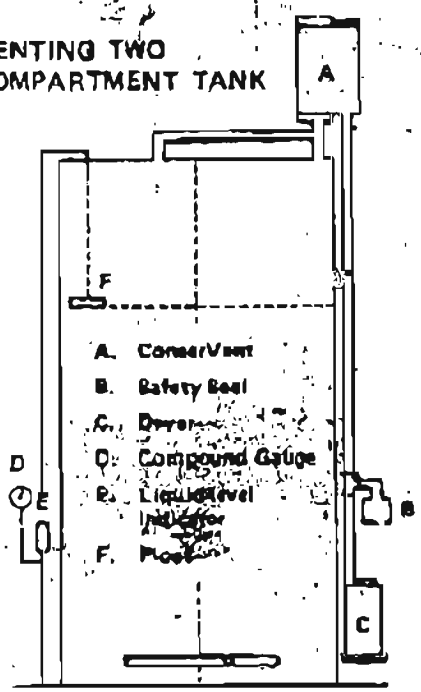

A. ConserVent
B. Safety Seal
C. Dryer
D. Compound Gauge
E. Liquid Level Indicator
F. Floor

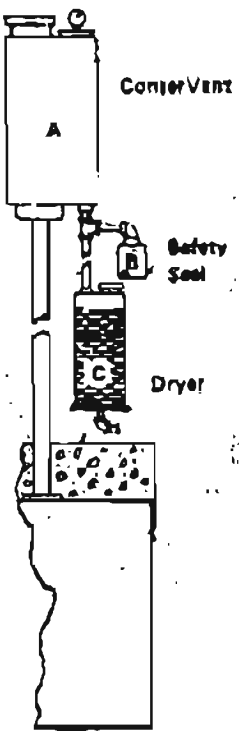

VENTING TANK INSIDE BUILDING WITH EMERGENCY VENT

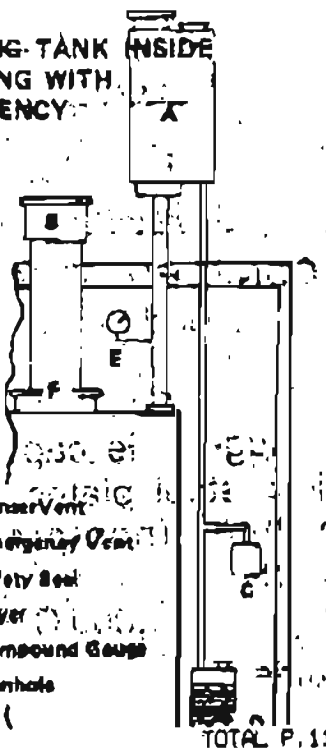

A. ConserVent
B. Emergency Vent
C. Safety Seal
D. Dryer
E. Compound Gauge
F. Manhole

EXHIBIT E-10

TYPICAL TANK ACCESS CONTAINER

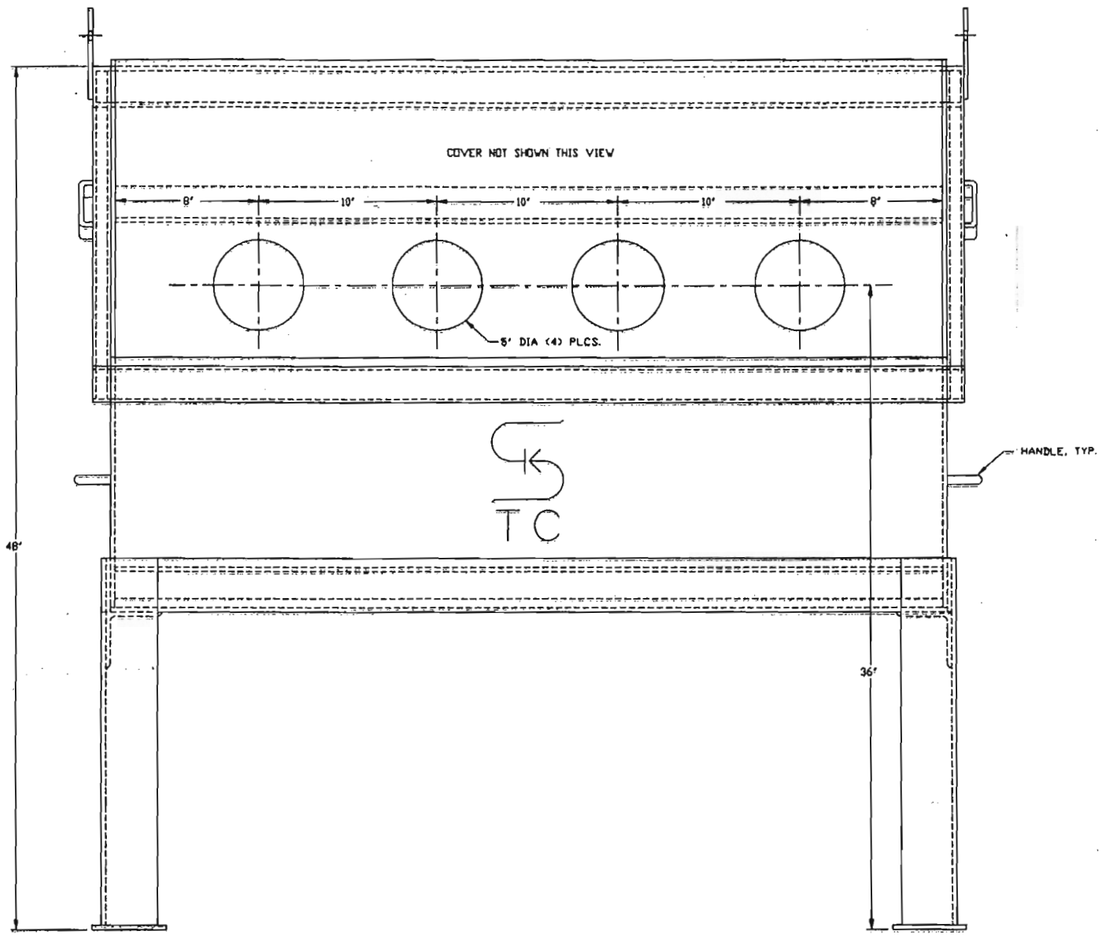

STORAGE TANK ACCESS CONTAINER - FRONT VIEW

SCALE: 1/4"=1'

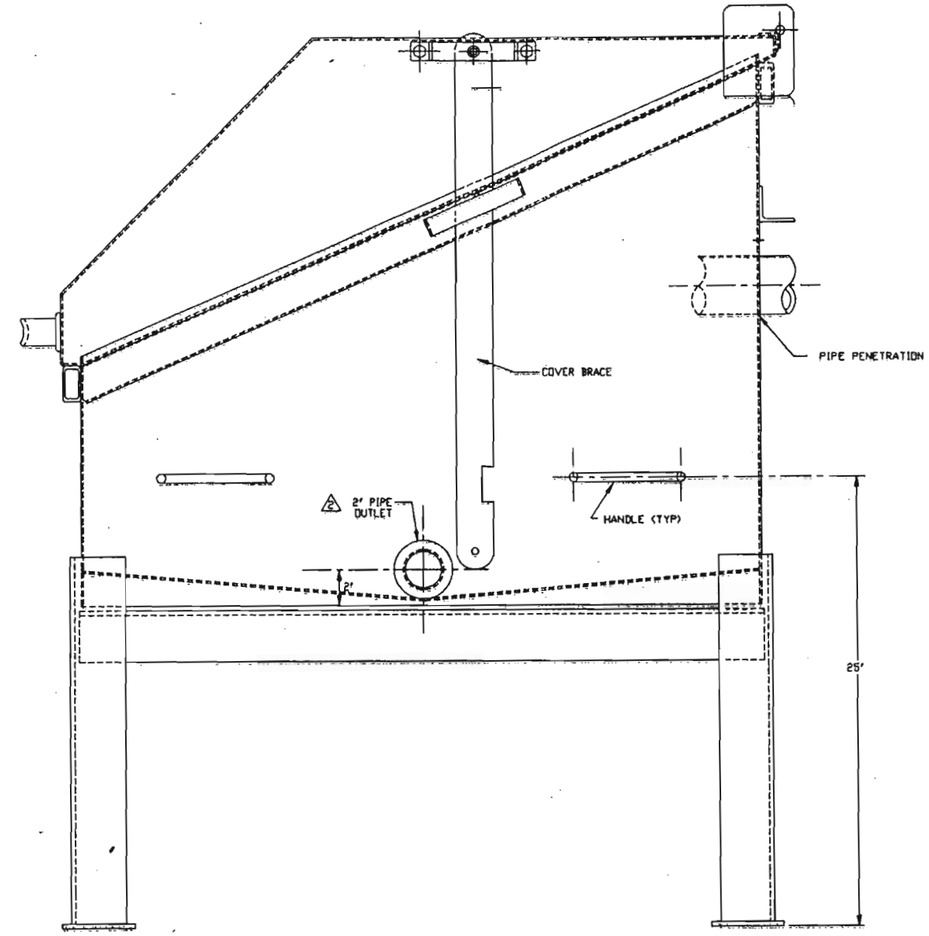

STORAGE TANK ACCESS CONTAINER - SIDE VIEW

SCALE: 1/4"=1'

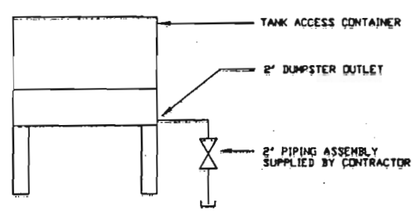

ACCESS CONTAINER PIPE OUTLET DETAIL

SCALE: NONE

GENERAL NOTES

THIS DRAWING CONTAINS INFORMATION PROPRIETARY TO SAFETY-KLEEN CORPORATION. ANY REPRODUCTION, DISCLOSURE OR USE OF THIS DRAWING IS EXPRESSLY PROHIBITED EXCEPT BY SAFETY-KLEEN OR AS SAFETY-KLEEN MAY AGREE IN WRITING.

1. TANK ACCESS CONTAINER (SUPPLIED BY SK) IS PROVIDED FULLY ASSEMBLED, LESS PIPING

2. CONT'R TO PROVIDE (3) NIPPLES, (1) 90° ELL, (150# MALLEABLE), (1) CAP, & (1) 2" BALL VALVE, IN EACH DUMPSTER PIPE OUTLET. SEE DETAIL THIS SHEET.

NO.	DESCRIPTION	BY	CHK	APPR	DATE

REVISIONS

TITLE: STORAGE TANK ACCESS CONTAINER INSTALLATION DETAILS

SAFETY-KLEEN CORP.
777 BIG TIMBER ROAD ELGIN, ILLINOIS 60123 PHONE 708-697-8460

SCALE	BY	CHKD	P.E. APPR	OP. APPR	DATE
1/4" = 1'-0"	O	-	KLS	-	12-1-90

STANDARD TYPE	STD-DWG NUMBER	REV. NO.
MECHANICAL	STD-3501	00

10-23-91 JHD

EXHIBIT E-11

TYPICAL TANK GUAGE DETAILS

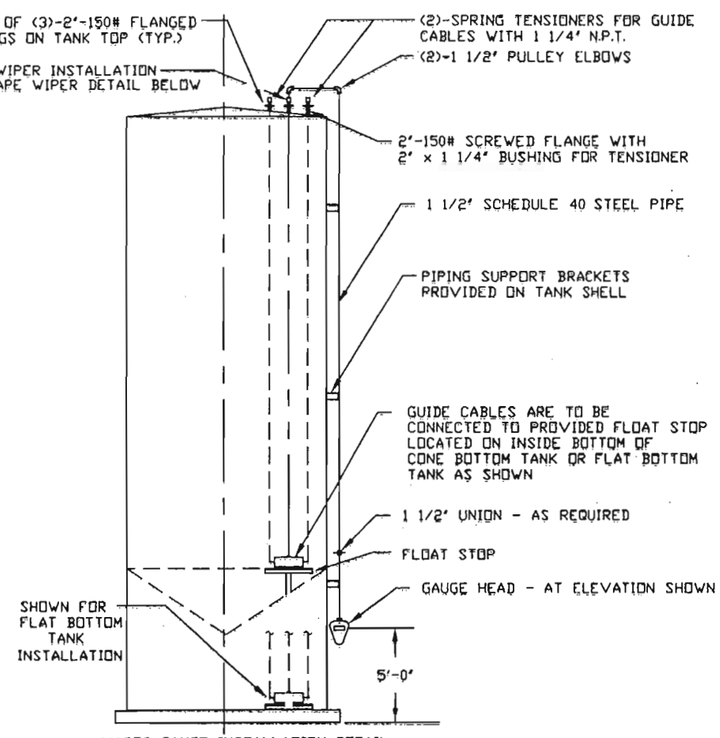

VAREC GAUGE INSTALLATION DETAIL

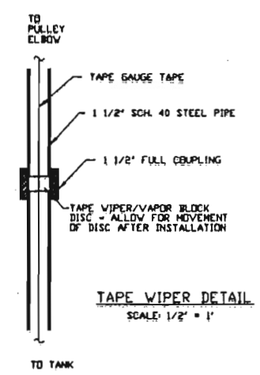

TAPE WIPER DETAIL

SCALE: 1/2" = 1'

THIS DRAWING CONTAINS INFORMATION PROPRIETARY TO SAFETY-KLEEN CORP. ANY REPRODUCTIONS, DISCLOSURE OR USE OF THIS DRAWING IS EXPRESSLY PROHIBITED EXCEPT BY SAFETY-KLEEN OR AS SAFETY-KLEEN MAY AGREE IN WRITING.

DF=STD160A0

REV	DESCRIPTION	BY	CK	APPR	DATE
0	PRELIMINARY	JKM			10/12/00

TYPICAL INSTALLATION DETAILS FOR TANK GAUGE

SAFETY-KLEEN CORP.

777 BIG TIMBER ROAD ELGIN, ILLINOIS 60123 PHONE 262/697-6466

SCALE	DRAWN	CHECKED	PROJ. ENG. APPR.	OPERATION APPR.	DATE
1"=1'-0"	DWC				8/22/00

STANDARD

SAFETY-KLEEN NO. STD-160A REV. 0

EXHIBIT E-12

SPECIFICATIONS FOR CONTAINERS

Drum Closure Specifications (2002)

SK PART #	UN SPEC CODE	SIZE	COLOR	DRUM MFG	PRODUCT LINE	SK PART # LID (w/gasket)	SK PART # LID (no gasket)	SK PART # GASKET	SK PART # RING	NUT & BOLT TORQUE	BUNG SIZE	BUNG TORQUE	TIES REQUIRED	BOLT SIZE REQUIRED
3306	1A2/Y1.9/100	5	GRAY	Cleveland Steel	Imaging	N/A	5486	5488	5487	40 in lbs	N/A	N/A	NO	
5551	3H1/Y1.8/250	5	NATURAL	TricorBraun	Imaging	COMPLETE	3839/3838	N/A	N/A	N/A	53mm, 18mm	36" lbs., 25" lbs.	NO	N/A
9946	1A1/Y1.2/100	5	YELLOW	Cleveland Steel	Paint Refinishing	N/A	N/A	N/A	N/A	N/A	2"	30 ft. lbs.	NO	N/A
9986	1A1/Y1.2/200	5	YELLOW	Cleveland Steel	Paint Refinishing	N/A	N/A	N/A	N/A	N/A	2"	30 ft. lbs.	NO	N/A
9988	1A1/Y1.2/200	5	YELLOW	Cleveland Steel	Paint Refinishing	N/A	N/A	N/A	N/A	N/A	2"	30 ft. lbs	NO	N/A
9989	1A1/Y1.2/200	5	YELLOW	Cleveland Steel	Paint Refinishing	N/A	N/A	N/A	N/A	N/A	2"	30 ft. lbs.	NO	N/A
102599	3H1/Y1.2/60	5	BLACK	Bonar	Parts Washer	N/A	N/A	N/A	N/A	N/A	2" buttress	200 IN LBS	NO	N/A
102600	3H1/Y1.2/80	5	BLUE	Bonar	Parts Washer	N/A	N/A	N/A	N/A	N/A	2" buttress	200 IN LBS	NO	N/A
100699	1A2/Y1.5/100	6	YELLOW	Cleveland Steel	Immersion Cleaner	COMPLETE	N/A	N/A	N/A	N/A	N/A	N/A	NO	N/A
708	1H2/Y30/S	6.5	WHITE	M&M	Imaging	N/A	N/A	N/A	N/A	N/A	N/A	N/A	NO	N/A
3270	1H2/Y1.2/80	15	BLACK	LOBO	Dry Cleaning	3272	N/A	3273	3274	N/A	2", 3/4"	20 ft. lbs, 9 ft. lbs.	YES	N/A
5415	1H2/Y80/S	15	YELLOW	Greif	Imaging	5471	N/A	N/A	5472	N/A	N/A	N/A	NO	N/A
15415	1H2/Y80/S	15	BLACK	Greif	TFS	15471	N/A	N/A	5472	N/A	N/A	N/A	NO	N/A
5552	1H1/Y1.8/100	15	BLUE	Greif	Imaging	N/A	N/A	N/A	N/A	N/A	2", 3/4"	20 ft. lbs., 9 ft. lbs.	NO	N/A
3324	1A2/1.6/200	16	BLACK	Greif	FRS	3389	N/A	3211	3389	50 ft. lbs.	2"	20 ft. lbs.	NO	2 1/2"
3250	1A2/1.6/200	16	BLACK	Greif	Gas Filters	3450	N/A	3211	3289	75 ft. lbs.	2"	20 ft. lbs.	NO	2 1/2"
3387	1A2/Y1.6/200	16	GRAY	Greif	Immersion Cleaner	N/A	3388	3211	3289	75 ft. lbs.	N/A	N/A	NO	2 1/2"
3362	1A1/Y1.2/100,1A1/Y1.8/300	16	BLACK	Greif	Paint Refinishing	N/A	N/A	N/A	N/A	N/A	2", 3/4"	20 ft. lbs.; 12 ft. lbs.	NO	N/A
3348	Not UN Spec	16	RED	Greif	Parts Washer	3213	NA	3211	3289	snug	N/A	N/A	NO	2 1/2"
13348	1A2/Y1.6/200	16	RED	Greif	Parts Washer	3213	N/A	3211	3289	75 ft. lbs.	N/A	N/A	NO	2 1/2"
13393	1A2/Y1.6/200	16	GREEN	Greif	Parts Washer	3217	N/A	3211	3289	75 ft. lbs.	N/A	N/A	NO	2 1/2"
3391	1A2/1.6/100	30	YELLOW	Greif	Absorbent	3218	NA	3212	3342	75 ft. lbs.	2"	20 ft. lbs.	NO	3 1/2"
3392	1A2/1.6/100	30	YELLOW	Greif	Absorbent	3218	N/A	3212	3342	75 ft. lbs.	2"	20 ft. lbs.	NO	3 1/2"
3280	1H2/Y1.2/80	30	BLACK	LOBO	Dry Cleaning	3282	NA	3283	3284	N/A	N/A	N/A	YES	N/A
3345	1A2/1.6/100	30	BLACK	Greif	FRS	3245	NA	3212	3342	75 ft. lbs.	2", 3/4"	30 ft. lbs., 15 ft. lbs.	NO	3 1/2"
3303	1A1/Y1.2/100	30	BLACK	Greif	FRS/Paint	N/A	N/A	N/A	N/A	N/A	2", 3/4"	30 ft. lbs.; 15 ft. lbs.	NO	N/A
3252	1A2/1.6/100	30	BLACK	Greif	Gas Filters	3452	N/A	3212	3242	75 ft. lbs.	2"	20 ft. lbs.	NO	3 1/2"
5430	1H2/Y100/S	30	YELLOW	Greif	Imaging	5434	N/A	N/A	5435	N/A	N/A	N/A	NO	N/A
15430	1H2/Y100/S	30	BLACK	Greif	TFS	15434	N/A	N/A	5435	N/A	N/A	N/A	NO	N/A
5553	1H1/Y1.8/100	30	BLUE	Greif	Imaging	N/A	N/A	N/A	N/A	N/A	2", 3/4"	20 ft. lbs., 9 ft. lbs.	NO	N/A
3349	Not UN Spec	30	RED	Greif	Parts Washer	UN LID	UN LID	3212	3242	snug	N/A	N/A	NO	3 1/2"
3360	1A2/Y1.6/100	30	DK. BLUE	Greif	Parts Washer	UN LID	UN LID	3212	3242	75 ft. lbs.	N/A	N/A	NO	3 1/2"
3395	Not UN Spec	30	GREEN	Greif	Oil Filters	UN LID	UN LID	3212	3242	snug	N/A	N/A	NO	3 1/2"
13349	1A2/Y1.6/100	30	RED	Greif	Parts Washer	3214	N/A	3212	3242	75 ft. lbs.	N/A	N/A	NO	3 1/2"
13395	1A2/Y1.6/100	30	GREEN	Greif	Parts Washer	3215	N/A	3212	3242	75 ft. lbs.	N/A	N/A	NO	3 1/2"
3369	1A2/1.8/200, 1A2/Y1.6/150	55	BLACK	Greif	FRS	3370	N/A	3372	3371	75 ft. lbs.	2", 3/4"	20 ft. lbs.; 12 ft. lbs.	NO	4"
8003369	1A2/Y1.2/100	55	BLACK	Palex	FRS	3370	N/A	3372	3371	60 ft lbs	2", 3/4"	30 ft. lbs., 15 ft. lbs.	NO	3 1/2"
5455	1H2/Y140/S	55	YELLOW	Greif	Imaging	N/A	5476	N/A	5477	N/A	N/A	N/A	NO	N/A
15455	1H2/Y140/S	55	BLACK	Greif	Imaging	N/A	15476	N/A	5477	N/A	N/A	N/A	NO	N/A
5555	1H1/Y1.8/100	55	BLUE	Greif	Imaging	N/A	N/A	N/A	N/A	N/A	2", 3/4"	20 ft. lbs., 9 ft. lbs.	NO	N/A
3383	1A2/Y1.6/150	55	GREEN	Greif	Oil Filters	N/A	3270	3372	3371	75 ft. lbs.	2", 3/4"	20 ft. lbs., 12 ft. lbs.	NO	4"
3300	1A2/X435/S	85	YELLOW	Greif	Salvage	3220	N/A	N/A	3221	50 ft. lbs.	3/4"	10 ft. lbs.	NO	4"
8003300	1A2/X435/S	85	YELLOW	Queen City	Salvage	3220	N/A	N/A	3221	40 FT LBS	2", 3/4"	30 ft. lbs., 15 ft. lbs.	NO	4"
8500	1H2/X340/S	95	YELLOW	LOBO	Salvage	8501	N/A	8503	N/A	arrows meet	N/A	N/A	NO	N/A

1A1- Steel closed head 1A2- Steel open head 1H1- Poly closed head 1H2- Poly open head

Drum Closure Specifications (2002)

SK PART #	UN SPEC CODE	SIZE	COLOR	DRUM MFG	PRODUCT LINE	SK PART # LID (w/gasket)	SK PART # LID (no gasket)	SK PART # GASKET	SK PART # RING	NUT & BOLT TORQUE	BUNG SIZE	BUNG TORQUE	TIES REQUIRED	BOLT SIZE REQUIRED
8550	UN 1G/X/30S	5 gal.		Grief	Lab-Pack	None	None	None	None				YES	
8510	UN 1G/X/60S	10 gal.	Fiber - Nat.	Grief	Lab-Pack	None	None	None	None				YES	
8515	UN 1G/X/71S	15 gal.	Fiber - Nat.	Grief	Lab-Pack	None	None	None	None				YES	
8520	UN 1G/Y/108S	20 gal.	Fiber - Nat.	Grief	Lab-Pack	None	None	None	None				YES	
8530	UN 1G/X/75S	30 gal.	Fiber - Nat.	Grief	Lab-Pack	None	None	None	None				YES	

EXHIBIT E-13

EXAMPLE PALLETT LAYOUT – STORAGE AREA

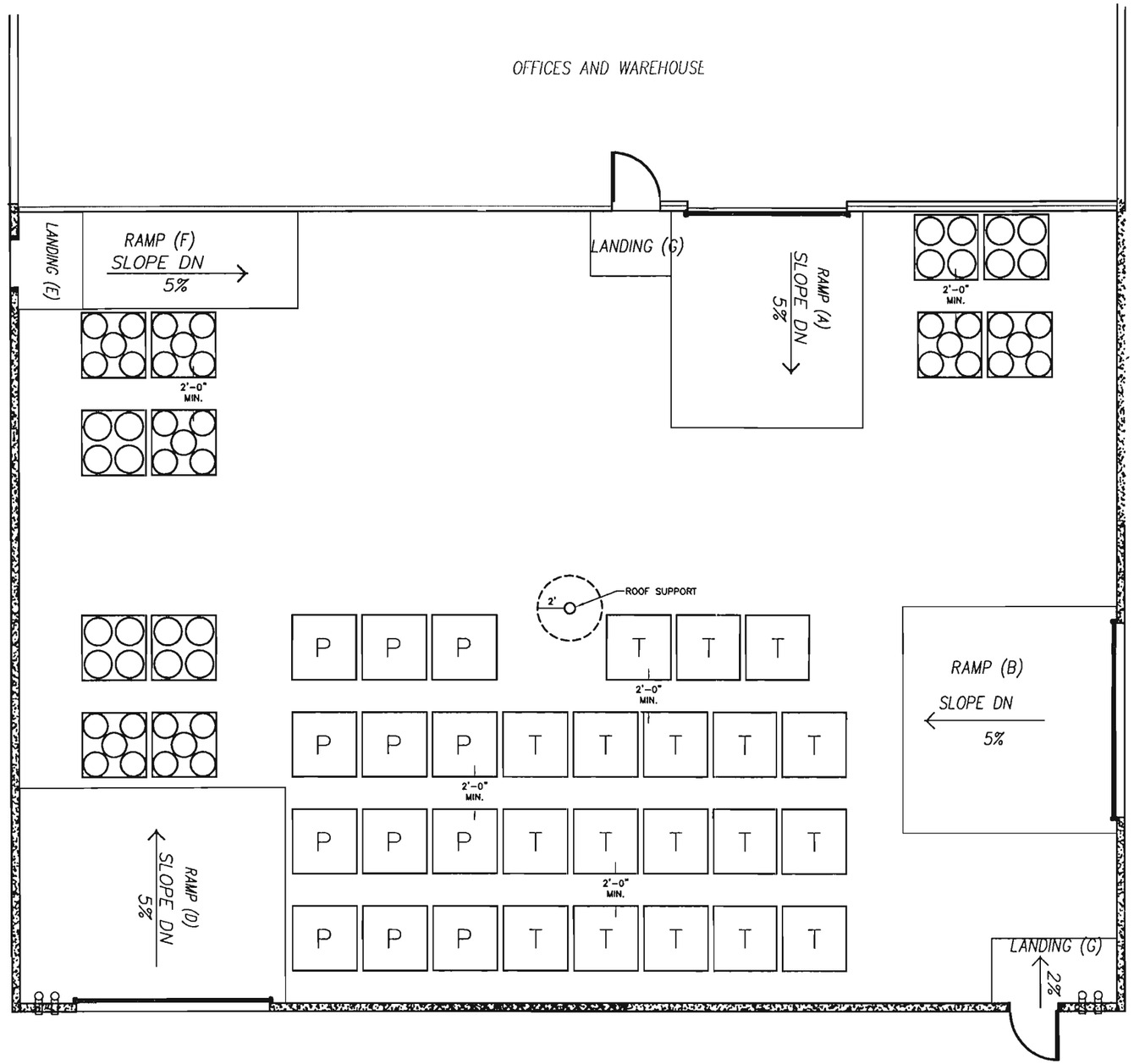

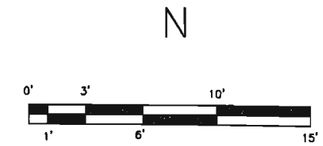

PRODUCT

P — PERMITTED WASTE

T — TRANSFER WASTE

GENERAL NOTES

1. PALLET LAYOUT AS INDICATED IS AN EXAMPLE LAYOUT ONLY. THIS LAYOUT CONFIGURATION MAY CHANGE. PALLETS MAY ALSO BE STACKED TWO HIGH.

PROPRIETARY STATEMENT

THIS DRAWING IS THE EXCLUSIVE PROPERTY OF SAFETY-KLEEN SYSTEMS, INC. AND IS PROPRIETARY AND CONFIDENTIAL INFORMATION. THIS DRAWING AND THE INFORMATION CONTAINED THEREIN MUST NOT BE DUPLICATED, USED, DIVULGED, REPRODUCED, COPIED, DISCLOSED OR APPROPRIATED IN WHOLE OR IN PART FOR ANY PURPOSE OTHER THAT AS EXPRESSLY AUTHORIZED BY SAFETY-KLEEN SYSTEMS, INC. THIS DRAWING MUST BE RETURNED PROMPTLY UPON REQUEST.

Project Solutions Companies
2005 West Broadway • Suite 210 • Columbia • MO 65203
• Phone: (573) 443-7100 • Fax: (573) 443-7181 •

NO.	DESCRIPTION	BY	CHK	APPR	DATE
0	RE-ISSUED FOR PERMIT	JEX	GO	GO	100611

REVISIONS

TITLE

EXAMPLE PALLET LAYOUT FOR CONTAINER STORAGE AREA

SAFETY-KLEEN SYSTEMS, INC.
5400 LEGACY DR. CLUSTER III, BLDG.3 PLANO, TX 75024
PHONE: 800-669-5740

SCALE	BY	CHKD	APPROVED	OPERATIONS	DATE
1/4" = 1'-0"	JEX	GO	GO	GO	10/06/11

SERVICE CENTER LOCATION	SC-DWG NUMBER	REV. NO.
N. LAS VEGAS, NV.	964-4000-PB-300	0

HAZARDOUS MATERIALS LOAD AND SEGREGATION CHART

CLASS	PLACARDS	CLASS OR DIVISION	PLACARD WEIGHT	NOTES						2.1	2.2	2.3 GAS ZONE A	2.3 GAS ZONE B	3	4.1	4.2	4.3					
	EXPLOSIVES *Add division number and compatibility group	1.1 1.2	ANY QUANTITY	A	*	*	*	*	*	X	X	X	X	X	X	X	X	X	X	X	X	X
	EXPLOSIVES *Add division number and compatibility group	1.3	ANY QUANTITY		*	*	*	*	*	X		X	X	X		X	X	X	X	X		X
	EXPLOSIVES *Add compatibility group	1.4	1,001 lbs.		*	*	*	*	*	0		0	0	0		0				0		0
	VERY INSENSITIVE EXPLOSIVES	1.5	1,001 lbs.	A	*	*	*	*	*	X	X	X	X	X	X	X	X	X	X	X	X	X
	EXTREMELY INSENSITIVE EXPLOSIVES	1.6	1,001 lbs.		*	*	*	*	*													
2	FLAMMABLE GASES	2.1	1,001 lbs.		X	X	0	X				X	0							0	0	
	NON-TOXIC NON-FLAMMABLE GASES	2.2	1,001 lbs.	B	X			X														
	POISONOUS GAS ZONE A	2.3	ANY QUANTITY		X	X	0	X		X				X	X	X	X	X	X			X
	POISONOUS GAS ZONE B	2.3	ANY QUANTITY		X	X	0	X		0				0	0	0	0	0	0			0
3	FLAMMABLE LIQUIDS	3	1,001 lbs.		X	X	0	X				X	0					0		X		
4	FLAMMABLE SOLIDS	4.1	1,001 lbs.		X			X				X	0							X		0
	SPONTANEOUSLY COMBUSTIBLE	4.2	1,001 lbs.		X	X	0	X				X	0							X		X
	DANGEROUS WHEN WET MATERIALS	4.3	ANY QUANTITY		X	X		X				X	0							X		0
	OXIDIZERS	5.1	1,001 lbs.	A	X	X		X				X	0	0						X		0
	ORGANIC PEROXIDES	5.2	1,001 lbs.	F	X	X		X				X	0							X		0
6	POISONOUS LIQUIDS PG I ZONE A	6.1	ANY QUANTITY	E	X	X	0	X		0				X	X	X	X	X	X			X
	RADIOACTIVE MATERIALS	7	ANY QUANTITY (yellow III label)		X			X		0												
8	CORROSIVE LIQUIDS	8	1,001 lbs.		X	X	0	X				X	0		0	X	0	0	0	X		

CLASS 3	COMBUSTIBLE LIQUIDS		IN BULK	C G
CLASS 6	OTHER THAN INHALATION HAZARD, ZONES A or B	POISON TOXIC n.a.	1,001 lbs.	C E
CLASS 9	MISCELLANEOUS		1,001 lbs.	C D

GENERAL INSTRUCTIONS FOR USING THE SEGREGATION TABLE FOR HAZARDOUS MATERIALS AS FOLLOWS

(1) The absence of any hazard class or division or a blank space in the Table indicates that no restrictions apply.

(2) The letter "X" in the Table indicates that these materials may not be loaded, transported, or stored together in the same transport vehicle or storage facility during the course of transportation.

(3) The letter "O" in the Table indicates that these materials may not be loaded, transported, or stored together in the same transport vehicle or storage facility during the course of transportation unless separated in a manner that, in the event of leakage from packages under conditions normally incident to transportation, commingling of hazardous materials would not occur. Notwithstanding the methods of separation employed, Class 8 (corrosive) liquids may not be loaded above or adjacent to Class 4 (flammable) or Class 5 (oxidizing) materials; except that shipments by load truckload shipments of such materials together when it is known that the mixture of contents would not cause a fire or a dangerous evolution of heat or gas.

(4) The "0" in the Table indicates that segregation among different Class 1 (explosive) materials is governed by the compatibility table in paragraph (f) of this section.

(5) The note "A" in the third column of the Table means that, notwithstanding the requirements of the letter "X", ammonium nitrate (UN 1942) and ammonium nitrate fertilizer may be loaded or stored with Division 1.1 (explosive) or Division 1.5 materials.

(6) When the §172.101 table or §172.402 of this subchapter requires a package to bear a subsidiary hazard label, segregation appropriate to the subsidiary hazard must be applied when that segregation is more restrictive than that required by the primary hazard. However, hazardous materials of the same class may be stowed together without regard to segregation required for any secondary hazard if the materials are not capable of reacting dangerously with each other and causing combustion or dangerous evolution of heat, evolution of flammable, poisonous, or asphyxiant gases, or formation of corrosive or unstable materials.

NOTES

A. See instructions §177.848(e)(5).

B. For domestic transportation of oxygen, compressed or oxygen, refrigerated liquid, the oxygen placard may be used in place of NON-FLAMMABLE GAS placard (§172.504(f)(7)).

C. No applicable segregation restrictions in §177.848(d).

D. For domestic transportation, a Class 9 placard is not required. A bulk packaging containing a Class 9 material must be marked with the appropriate identification number displayed on a Class 9 placard, an orange panel or a white square-on-point display configuration as required by subpart D of this part (§172.504(f)(9)).

E. Packages with POISON or POISON INHALATION HAZARD labels, or a POISON label displaying "PG I" or "PG III" marked next to a POISON label may not be transported with foodstuffs, feed or any other edible material, intended for humans or animals. For exceptions see §177.841(e).

F. Placard any quantity of a 5.2, ORGANIC PEROXIDE, TYPE B, LIQUID OR SOLID, TEMPERATURE CONTROLLED.

G. No placard is required for combustible liquids in non-bulk packages (119 gal. or less).

STORAGE

In addition to the provisions of paragraph (d) of this section and except as provided in §173.12(a) of this subchapter, cyanides, cyanide mixtures or solutions may not be stored, loaded and transported with acids if a mixture of the materials would generate hydrogen cyanide, and Division 4.2 materials may not be stored, loaded and transported with Class 8 liquids.

STATEWAY EXCEPTIONS FROM SEGREGATION REQUIREMENTS

(1) The provisions of §§174.81(c), 176.83(b) and 177.848(c) of this subchapter do not apply to waste cyanides or waste cyanide mixtures or solutions stored, loaded, or transported with acids in accordance with the following:

(i) The waste cyanides or waste cyanide mixtures or solutions must be packaged in lab packs in accordance with paragraph (b) of this section;

(ii) The acids must be packaged in lab packs in accordance with paragraph (b) of this section or in authorized single packagings not exceeding 208 L (55 gallons) capacity;

(iii) Waste cyanides or waste cyanide mixtures may not exceed 2 kg (4.4 pounds) per inner receptacle and may not exceed 10 kg (22 pounds) per outer packaging; waste cyanide solutions may not exceed 2 L (0.6 gallon) per inner receptacle and may not exceed 10 L (3.5 gallons) per outer packaging.

(iv) The waste cyanides or waste cyanide mixtures or solutions must be:

(A) Separated from the acids by a minimum horizontal distance of 1.2 m (4 feet); and

(B) Loaded at least 100 mm (4 inches) off the floor of the freight container, unit load device, transport vehicle or rail car.

(2) The provisions of §§174.81(d), 176.83(b) and 177.848(d) of this subchapter do not apply to waste Division 4.2 materials stored, loaded or transported with Class 8 liquids in accordance with the following:

(i) The waste Division 4.2 materials are packaged in lab packs in accordance with paragraph (b) of this section;

(ii) The Class 8 liquids are packaged in lab packs in accordance with paragraph (b) of this section or in authorized single packagings not exceeding 208 L (55 gallons) capacity;

(iii) The waste Division 4.2 materials may not exceed 2 kg (4.4 pounds) per inner receptacle and may not exceed 10 kg (22 pounds) per outer packaging;

(iv) The waste Division 4.2 materials must be separated from the Class 8 liquids by a minimum horizontal distance of 1.2 m (4 feet);

(v) The waste Division 4.2 materials and the Class 8 liquids are loaded at least 100 mm (4 inches) off the floor of the freight container, unit load device, transport vehicle or rail car.

Printed & Published by J. J. KELLER & ASSOCIATES, INC.®, Neenah, WI • USA • (800) 327-6868 • jjkeller.com • Printed in the United States

EXHIBIT E-14

SECONDARY CONTAINMENT CALCULATIONS

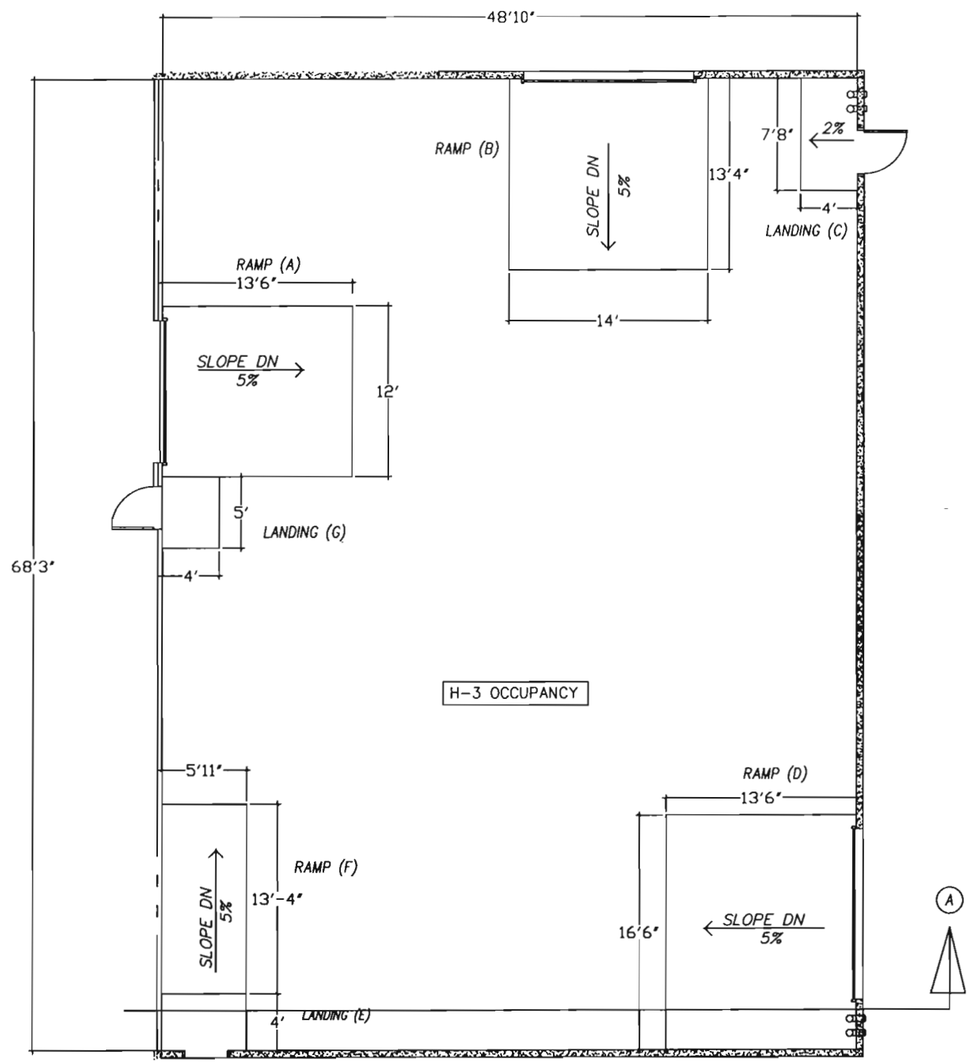

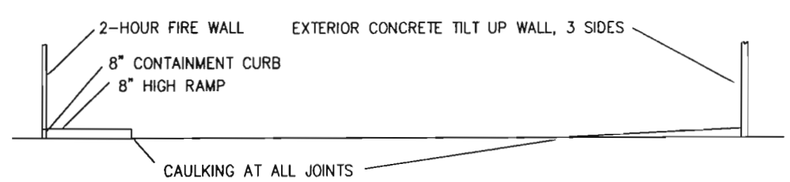

TYPICAL SECTION (A)

CONTAINMENT CALCULATIONS
ALL HEIGHTS ARE 8" ABOVE FINISH FLOOR

DESCRIPTION	LOCATION	SIZE (8" HIGH)	VOLUME (CUBIC FEET)
RAMP	A	12X13-6	54.3
RAMP	B	14X13-4	62.5
LANDING	C	7-8X4	20.6
RAMP	D	16-6X13-6	74.6
LANDING	E	5 11X4	7.9
RAMP	F	5-11X13-6	26.4
LANDING	G	5X4	15.9
H-3 ROOM		48-10X68-3	2233

2233-54.3-62.5-20.6-74.6-7.9-26.4-15.9=1971 cubic feet
1971 cubic feet x 7.48 gallons/cubic foot = 14,743 gallon capacity of H-3 room

GENERAL NOTES

THIS DRAWING CONTAINS INFORMATION PROPRIETARY TO SAFETY-KLEEN CORP. ANY REPRODUCTION, DISCLOSURE OR USE OF THIS DRAWING IS EXPRESSLY PROHIBITED EXCEPT BY SAFETY-KLEEN OR AS SAFETY-KLEEN MAY AGREE IN

N W E S

PROFESSIONAL ENGINEER-STATE OF NEVADA
KIRBY P. ADAMS
EXP: 12/31/04
CIVIL
No. 15522
10/21/02

CONSULTANT/ENGINEER:

M T I
Acclaim Materials Testing & Inspection, LLP
5900 Emerald Avenue, Suite A
Las Vegas, NV 89122
(702) 938-0650 * Fax (702) 938-0649

NO.	DESCRIPTION	BY	CHK	APPR	DATE
	REVISIONS				

CONTAINER STORAGE AREA

SAFETY-KLEEN CORP.
777 BIG TIMBER ROAD ELGIN, ILLINOIS 60123 PHONE 708-697-8460

SCALE	BY	CHKD	P.E. APPR	DP. APPR	DATE
N.T.S.	FMR	FMR	P.E.APPR.	DP.APPR.	8/15/02

SERVICE CENTER BRANCH AT: N. LAS VEGAS, NV
STD-DWG-REV NO.: 964-0200-PB-703

EXHIBIT E-15

SUBPART CC COMPLIANCE PLAN

SUBPART CC COMPLIANCE PLAN
Safety-Kleen Systems – Las Vegas Nevada

The Safety-Kleen Las Vegas facility shall control air pollutant emissions from waste management units at this facility pursuant to the requirements of RCRA Subpart CC, through implementation of this compliance plan.

The following plan describes this facility's waste determination procedures, tank and container design/management practices, organic emission controls, inspection and monitoring, and recordkeeping and reporting, pursuant to requirements/standards promulgated under RCRA Subpart CC.

Waste Determination Procedures

For purposes of waste determination, this facility utilizes knowledge developed in the Waste Characteristics portion of the Operation Plan/Permit included in the Part B Permit at Appendix D. For those hazardous wastes which are managed on a transfer basis, and which are not described in the Operation Plan/Permit, the Subpart CC regulation does not apply. However, the owner/operator may use knowledge of the waste based on information included in manifests, shipping papers, or waste certification notices to confirm waste determination for the generator or the ultimate receiving facility.

Based upon this knowledge, it has been determined that all wastes managed in tanks or containers at this facility may display an average volatile organic concentration of greater than 500 ppm at the point of waste origination. Therefore, all hazardous wastes managed in tanks or containers at this facility shall be managed in accordance with the applicable Subpart CC standards.

Point of Waste Origination

The point of waste origination for all wastes generated offsite and transported to the site in closed containers, which are subsequently managed in tanks or containers at this facility, is effectively the site boundary at the entrance gate.

For those hazardous wastes generated onsite, the point of waste origination is the point of waste generation, as previously defined by RCRA. Typically, the majority of wastes generated on site occurs at the return and fill station.

Tanks

Tanks which manage organic wastes at this facility are described in detail in the Operation Plan/Permit at Appendix E-5 through E-9. Certain features of these units, as they relate to Subpart CC standards, are described below.

Waste mineral spirits ASTs are fixed roof, non-pressurized, quiescent tanks. The waste tank at the facility is a level 1 tank under Subpart CC. The tank design capacity is less than 20,000 gallons, and the waste in this tank exhibits a vapor pressure of less than 76.6 kPa (11.1 psi). The actual vapor pressure of the waste managed in tanks is .267 Kpa. The maximum organic vapor pressure is determined using knowledge of the waste pursuant to 265.1084 (c)(4). Documentation for the basis of this determination is found in the Waste Characteristics portion of the Operation Plan/Permit. Only parts washer solvents are managed in the waste storage tank.

These tanks are designed so that all cover openings can be closed with no visible gaps, holes, cracks, or other open spaces into the interior of the tank. The cover and all cover openings operate with no detectable emissions when in a closed position. Cover openings are maintained in a closed position at all times except when waste is being added to or removed from the tank, or when necessary sampling or repair/maintenance is performed on the tanks.

These tanks are vented to the atmosphere through a safety device (conservation vent) which has been designed to operate with no detectable organic emissions when the device is in the closed position.

Return & Fill Station

The Return and Fill Station that manages organic wastes at this facility is described in detail in the Operation Plan/Permit. Certain features of these units, as they relate to the Subpart CC regulations, are described below. APPENDIX-E6

The fill dumpster units at the Return & Fill consist of two steel containment pans covered with lids. The lids of the fill dumpsters are managed in accordance with Subpart CC level 1 Controls. The lids of the fill dumpsters are maintained in a closed position at all times except when waste is being added or removed from the drum washer, or when necessary repair/maintenance is performed on the units.

Containers

Containers which manage organic wastes at this facility are described in detail in the Operation Plan/Permit at Appendix E-12 Certain features of these units, as they relate to the Subpart CC regulations, are described below.

Containers managing hazardous wastes at this facility generally fall into three categories. (1) Those hazardous waste containers that are less than 26 gallons in capacity are wholly exempt from consideration under Subpart CC. In addition, containers of wastes that are transferred through the facility are still "in the course of transportation," and therefore are exempt from Subpart CC. (2) Containers with capacities between 26 and 122 gallons are all level 1 containers, and generally meet the Level 1 standards as covered containers designed and operated with no gaps, holes, cracks, or other open spaces into the container. In addition, all Safety-Kleen containers used to manage waste meet applicable USDOT regulations on packaging hazardous materials for transportation. (3) Containers of greater than 122 gallons that manage hazardous wastes at this facility are not in light material service and are Level 1 covered containers designed and operated with no gaps, holes, cracks, or other open spaces into the container. In addition, all Safety-Kleen containers used to manage wastes use applicable USDOT regulations on packaging hazardous materials for transportation.

Inspection and Monitoring

Hazardous wastes accepted from off-site generators are already containerized when the facility accepts the waste. Such containers are visually inspected either at the time they are unloaded for storage or staged for transfer at the facility, or during the daily facility inspection. The inspection occurs within 24 hours of the wastes arrival at the facility. This written plan and schedule to perform the inspections is incorporated in the facility inspection plan by this reference.

An initial visual tank inspection was conducted on April 22, 2002. No defects were noted on the waste storage tank, that could result in air pollutant emissions. The most recent annual visual tank inspection was conducted on January 7, 2011; no defects were noted on the waste storage tank as a result of that inspection. A summary table of past deficiencies is included with this plan.

Visual tank inspections shall be conducted on an annual basis to ensure the top of the tank, covers, manhole covers, pressure relief vents, conversation vents, and piping are in good condition with no gaps, holes, cracks or other open spaces.

Recordkeeping

Documentation of tank and tank cover design: See operations Plan/Permit

Documentation of waste determinations: See Waste characteristics portion of Operations Plan/Permit

Records of all visual inspections: See daily facility inspection records, and enclosed record of initial tank inspection

Listing of all tanks, by unique identifying number which are difficult or unsafe to inspect: See enclosed.

Results of determination of the maximum vapor pressure of waste in tanks and record of the tank dimensions and design capacity: See operations Plan/Permit.

Subpart CC Compliance Plan

Past Deficiencies

Date	Description	Location	Abatement date

Sub-part CC Visual Inspection Checklist

End of Week Container Inspection

Complete this checklist on the last day of the service week when the facility inspection will not be conducted within 24 hours. The inspection on containers will supplement container inspections completed during facility inspections during the work week.

Inspector Name: _____ Signature: _____

Date of Inspection: _____

Condition of containers: (Circle "A" if the condition of all containers is acceptable; circle "N" if the condition of one or more containers is unacceptable).

A N

If "N"; circle appropriate problem: Missing or Loose Lids; Missing, Incorrect, or Incomplete Labels; Rust; Distortion; Other: _____

_____

Annual Visual Tank Inspection

Visual Tank Inspection

Complete this inspection once in January to satisfy the annual inspection requierd under Subpart CC

Inspector Name: _____ Signature: _____

Date of Inspection: _____ / /

Unacceptable conditions: Gaps/holes or cracks in tank top, manhole cover, gaskets, vents or piping that could result in emissions. Defects noted: _____

_____

Action Taken to Correct Unacceptable Condition: _____

_____

SUBPART CC COMPLIANCE PLAN
Safety-Kleen Systems – Las Vegas Nevada

The Safety-Kleen Las Vegas facility shall control air pollutant emissions from waste management units at this facility pursuant to the requirements of RCRA Subpart CC, through implementation of this compliance plan

The following plan describes this facility's waste determination procedures, tank and container design/management practices, organic emission controls, inspection and monitoring, and recordkeeping and reporting, pursuant to requirements/standards promulgated under RCRA Subpart CC.

Waste Determination Procedures

For purposes of waste determination, this facility utilizes knowledge developed in the Waste Characteristics portion of the Operation Plan/Permit included in the Part B Permit at Appendix D. For those hazardous wastes which are managed on a transfer basis, and which are not described in the Operation Plan/Permit, the Subpart CC regulation does not apply. . However, the owner/operator may use knowledge of the waste based on information included in manifests, shipping papers, or waste certification notices to confirm waste determination for the generator or the ultimate receiving facility.

Deleted: Transfer wastes that are stored in the permitted area are subject to Subpart CC.

Based upon this knowledge, it has been determined that all wastes managed in tanks or containers at this facility may display an average volatile organic concentration of greater than 500 ppm at the point of waste origination. Therefore, all hazardous wastes managed in tanks or containers at this facility shall be managed in accordance with the applicable Subpart CC standards.

Point of Waste Origination

The point of waste origination for all wastes generated offsite and transported to the site in closed containers, which are subsequently managed in tanks or containers at this facility, is effectively the site boundary at the entrance gate.

For those hazardous wastes generated onsite, the point of waste origination is the point of waste generation, as previously defined by RCRA. Typically, the majority of wastes generated on site occurs at the return and fill station.

Tanks

Tanks which manage organic wastes at this facility are described in detail in the Operation Plan/Permit at Appendix E-5 through E-9. Certain features of these units, as they relate to Subpart CC standards, are described below.

Waste mineral spirits ASTs are fixed roof, non-pressurized, quiescent tanks. The waste tank at the facility is a level 1 tank under Subpart CC. The tank design capacity is less than 20,000 gallons, and the waste in this tank exhibits a vapor pressure of less than 76.6 kPa (11.1 psi). The actual vapor pressure of the waste managed in tanks is .267 Kpa. The maximum organic vapor pressure is determined using knowledge of the waste pursuant to 265.1084 (c)(4). Documentation for the basis of this determination is found in the Waste Characteristics portion of the Operation Plan/Permit. Only parts washer solvents are managed in the waste storage tank.

These tanks are designed so that all cover openings can be closed with no visible gaps, holes, cracks, or other open spaces into the interior of the tank. The cover and all cover openings operate with no detectable emissions when in a closed position. Cover openings are maintained in a closed position at all times except when waste is being added to or removed from the tank, or when necessary sampling or repair/maintenance is performed on the tanks.

These tanks are vented to the atmosphere through a safety device (conservation vent) which has been designed to operate with no detectable organic emissions when the device is in the closed position.

Return & Fill Station

The Return and Fill Station that manages organic wastes at this facility is described in detail in the Operation Plan/Permit. Certain features of these units, as they relate to the Subpart CC regulations, are described below.

The fill dumpster units at the Return & Fill consist of two steel containment pans covered with lids. The lids of the fill dumpsters are managed in accordance with Subpart CC level 1 Controls. The lids of the fill dumpsters are maintained in a closed position at all times except when waste is being added or removed from the drum washer, or when necessary repair/maintenance is performed on the units.

Containers

Containers which manage organic wastes at this facility are described in detail in the Operation Plan/Permit at Appendix E-12. Certain features of these units, as they relate to the Subpart CC regulations, are described below.

Deleted: .

Containers managing hazardous wastes at this facility generally fall into three categories. (1) Those hazardous waste containers that are less than 26 gallons in capacity are wholly exempt from consideration under Subpart CC. In addition, containers of wastes that are transferred through the facility are still "in the course of transportation," and therefore are exempt from Subpart CC. (2) Containers with capacities between 26 and 122 gallons are all level 1 containers, and generally meet the Level 1 standards as covered containers designed and operated with no gaps, holes, cracks, or other open spaces into the container. In addition, all Safety-Kleen containers used to manage waste meet applicable USDOT regulations on packaging hazardous materials for transportation. (3) Containers of greater than 122 gallons that manage hazardous wastes at this facility are not in light material service and are Level 1 covered containers designed and operated with no gaps, holes, cracks, or other open spaces into the container. In addition, all Safety-Kleen containers used to manage wastes use applicable USDOT regulations on packaging hazardous materials for transportation.

Inspection and Monitoring

Hazardous wastes accepted from off-site generators are already containerized when the facility accepts the waste. Such containers are visually inspected either at the time they are unloaded for storage or staged for transfer at the facility, or during the daily facility inspection. The inspection occurs within 24 hours of the wastes arrival at the facility. This written plan and schedule to perform the inspections is incorporated in the facility inspection plan by this reference.

An initial visual tank inspection was conducted on April 22, 2002. No defects were noted on the waste storage tank, that could result in air pollutant emissions. The most recent annual visual tank inspection was conducted on January 7, 2011. no defects were noted on the waste storage tank as a result of that inspection. A summary table of past deficiencies is included with this plan.

Visual tank inspections shall be conducted on an annual basis to ensure the top of the tank, covers, manhole covers, pressure relief vents, conversation vents, and piping are in good condition with no gaps, holes, cracks or other open spaces.

Deleted: s

Recordkeeping

Documentation of tank and tank cover design. See operations Plan/Permit

Documentation of waste determinations: See Waste characteristics portion of Operations Plan/Permit

Records of all visual inspections: See daily facility inspection records, and enclosed record of initial tank inspection

Listing of all tanks, by unique identifying number which are difficult or unsafe to inspect: See enclosed.

Results of determination of the maximum vapor pressure of waste in tanks and record of the tank dimensions and design capacity: See operations Plan/Permit.

Subpart CC Compliance Plan

Past Deficiencies

Date	Description	Location	Abatement date

Deleted: ¶
¶
¶
¶
¶
¶

EXHIBIT E-16

SUBPART BB EQUIPMENT SCHEMATIC AND COMPLIANCE PLAN

SUBPART BB INSPECTION PROCEDURE
FOR DRUM WASHER SYSTEM

Purpose: This procedure is intended to identify leaks from pumps, valves and other appurtenances associated with the drum washer system to comply with the requirements of 40 CFR 264 Subpart BB, Air Emission Standards for Equipment Leaks.

Pumps

1. Each pump and valve will be inspected on a daily basis for any evidence of leakage, which is indicated by any sign of liquids dripping form the device or hissing sound, or solvent odor.

2. Visual and olfactory means will be used to detect evidence of leakage; all leaks will be noted on the inspection log.

3. Should a leak be detected, a first attempt at repair shall be made no later than 5 calendar days after the leak is detected (e.g., tightening the packing gland).

4. When a leak is detected, it shall be repaired as soon as practical, but not later than 15 days after being detected.

5. Equipment discovered to be leaking must be identified with a weatherproof tag containing the following information:
   1. Equipment I.D. number.
   2. Date leak found

   For pumps, this tag can be removed after effective repairs are made. For valves, this tag must remain in place until two successive months of monitoring do not detect a leak.

6. Results of inspections will be recorded on the Inspection Log, which shall be kept with the Facility Operating Record.

7. All detected leaks and the corrective action for each leak shall be recorded on the Drum Washer Repair Log, which shall be kept with the Facility Operating Record.

General

1. Upon request for "Repair Delay" (40 CFR § 264.1059) the following shall occur:
   1. A review of the standards as it pertains to the particular leak in question.
   2. If a delay in repair is found to be permissible, the reasons for the delay shall be documented. This documentation along with the signature of the person whose decision it was to delay the repair, the expected date of repair, and the date of successful repair, will be entered into the permanent facility operating record.

LEAK DETECTION AND REPAIR RECORD

EQUIPMENT I.D. #_____ BRANCH #_____
DESCRIPTION _____

	DATE	INSPECTORS SIGNATURE
HOW WAS POTENTIAL OR ACTUAL LEAK DETECTED?_____	_____	_____
DESCRIBE THE POTENTIAL OR ACTUAL LEAK:_____ _____		
INSTRUMENT MONITORING WITHIN FIVE DAYS	_____	_____
1. RESULTS_____		
REPAIR ATTEMPT METHOD_____	_____	_____
2. RESULTS_____		
REPAIR ATTEMPT METHOD_____	_____	_____
3. RESULTS_____		
DATE OF SUCCESSFUL REPAIR (must be completed within 15 days)	_____	_____
METHOD_____		
4. RESULTS_____		

FOLLOWUP MONTHLY MONITORING FOR VALVES

5. RESULTS_____	_____	_____
6. RESULTS_____	_____	_____

MONITORING SUMMARY

	(Reference Number – see above)					
	1	2	3	4	5	6
Instrument # / Operator	___	___	___	___	___	___
Calibration	___	___	___	___	___	___
Background Reading	___	___	___	___	___	___
Reading at Equipment	___	___	___	___	___	___
Leak Detected?	___	___	___	___	___	___

ATTACH ANY DOCUMENTATION PREPARED BY THE CONSULTANT

INSPECTION LOG SHEET FOR:
DAILY INSPECTION OF:
TANK EQUIPMENT

INSPECTOR'S NAME/TITLE:_____

INSPECTOR'S SIGNATURE DAILY

MONDAY	TUESDAY	WEDNESDAY	THURSDAY	FRIDAY

Date (M/D/Y) ___/___/___ ___/___/___ ___/___/___ ___/___/___ ___/___/___

Time _____ _____ _____ _____ _____

Pump, Flange or Valve Number	MON.	TUES	WED.	THURS	FRI
1. 2" Ball Valve	A N	A N	A N	A N	A N
2. 2" Threaded Union	A N	A N	A N	A N	A N
3. 2" Flex Connector	A N	A N	A N	A N	A N
4 2" CUP Valve	A N	A N	A N	A N	A N
5. 1.5" Ball Valve	A N	A N	A N	A N	A N
6. 1.5" Connection	A N	A N	A N	A N	A N
7. 1.5" Flex Connection	A N	A N	A N	A N	A N
8. 1.5" Threaded Connection	A N	A N	A N	A N	A N
9. 1.5" Threaded Connection	A N	A N	A N	A N	A N
11. 2" Ball Valve	A N	A N	A N	A N	A N
12. 2" to 1.5" reducer	A N	A N	A N	A N	A N
13. 1.5" Threaded Connection	A N	A N	A N	A N	A N
14. 1.5" Threaded Ball Valve	A N	A N	A N	A N	A N
15. 1.5" Threaded Connection	A N	A N	A N	A N	A N
16 UMS Pump	A N	A N	A N	A N	A N
17 1.5" Ball Valve	A N	A N	A N	A N	A N
18 2" Ball Valve With Flange	A N	A N	A N	A N	A N
19. Threaded Valve Fitting	A N	A N	A N	A N	A N
20. Flange Fitting	A N	A N	A N	A N	A N
21. 2" Threaded Ball Valve	A N	A N	A N	A N	A N
22. 2" Threaded Union	A N	A N	A N	A N	A N
23. 2" Flex Connector	A N	A N	A N	A N	A N
24 2" Threaded Union	A N	A N	A N	A N	A N
26. 2" Threaded Connection	A N	A N	A N	A N	A N
27. 2" Threaded Connection	A N	A N	A N	A N	A N
28. 1.5" Threaded Connection	A N	A N	A N	A N	A N
30. 1.5" Threaded Ball Valve	A N	A N	A N	A N	A N
31 2" Threaded Connection	A N	A N	A N	A N	A N
32. 2" Threaded Connection	A N	A N	A N	A N	A N
33. 1.5" Threaded Connection	A N	A N	A N	A N	A N
34. 2" Connection	A N	A N	A N	A N	A N
36. 3" Back Flow Valve	A N	A N	A N	A N	A N
37. 3" Back Flow Valve	A N	A N	A N	A N	A N
38. 2" Connection	A N	A N	A N	A N	A N
40. 36" Manway cover	A N	A N	A N	A N	A N

If 'N', enter pump or valve #_____ and circle appropriate problems: potential leak, sticking, wear, does not operate smoothly, other:_____. For all leaks and potential leaks, the Leak Detection and Repair Record must be completed. *Add short descriptions of unit being inspected

**A= Acceptable N = Not Acceptable.

INSPECTION LOG SHEET FOR DAILY INSPECTION OF TANK EQUIPMENT

INSPECTOR'S NAME/TITLE:_____

INSPECTOR'S SIGNATURE DAILY

MONDAY	TUESDAY	WEDNESDAY	THURSDAY	FRIDAY

___/___/___ ___/___/___ ___/___/___ ___/___/___ ___/___/___

Date (M/D/Y)

_____ _____ _____ _____ _____

Time

Pump, Flange or Valve Number	MON.	TUES	WED.	THURS	FRI
41. Emergency Shut-off Valve	A N	A N	A N	A N	A N
42. 3" Ball Valve	A N	A N	A N	A N	A N
43. 1.5" Union to 1.5"/2.0"Coupling	A N	A N	A N	A N	A N
44 Coupling Assembly	A N	A N	A N	A N	A N
45. 7" Diameter Basket Strainer	A N	A N	A N	A N	A N
46. 2" Ball Valve With Flange	A N	A N	A N	A N	A N
47. 2" Valve and Nippler	A N	A N	A N	A N	A N
010. Recirculation Pump	A N	A N	A N	A N	A N
020. Recirculation Pump	A N	A N	A N	A N	A N

If 'N', enter pump or valve #_____ and circle appropriate problems: potential leak, sticking, wear, does not operate smoothly, other:_____.For all leaks and potential leaks, the Leak Detection and Repair Record must be completed.v*Add short descriptions of unit being inspected.

**A= Acceptable N = Not Acceptable.

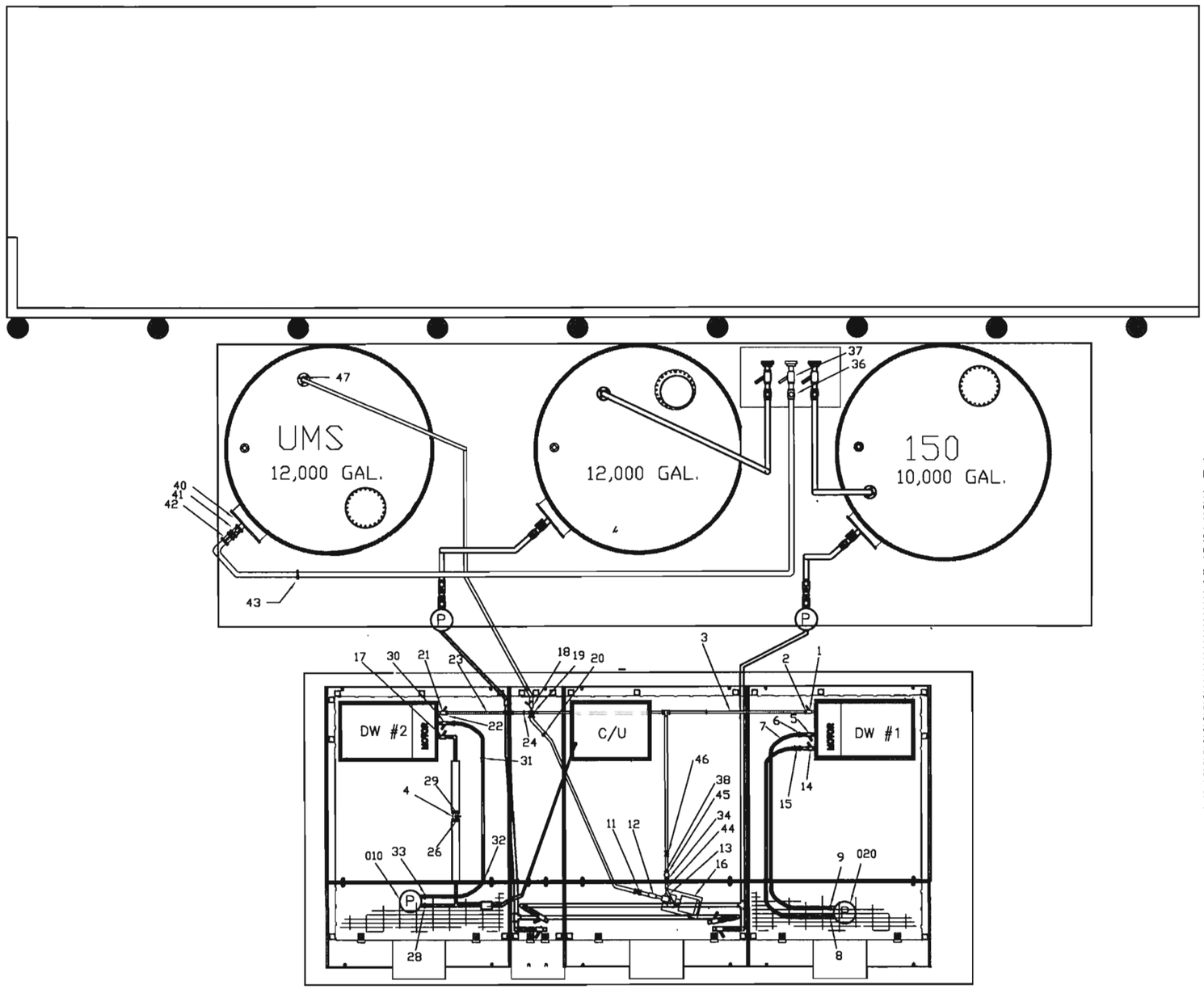

TAG
NUMBER

1 2" THREADED BALL VALVE INTO DRUM WASHER
2.. 2" THREADED UNION
3.. 2" FLEX CONNECTOR
4. 2" BALL VALVE
5. 1.5" BALL VALVE
6. 1.5" CONNECTION
7. 1.5" FLEX CONNECTION
8. 1.5" THREADED CONNECTION @ PUMP
9. 1.5" THREADED CONNECTION @ PUMP
11. 2" BALL VALVE
12 2" TO 1.5" REDUCING COUPLING
13 1.5" THREADED CONNECTION @ PUMP
14. 1.5" THREADED BALL VALVE
15. 1.5" THREADED CONNECTION
16. UMS PUMP
17. 1.5" BALL BALVE
18 2" BALL VALVE WITH FLANGE
19 THREADED FLANGE FITTING
20 FLANGE FITTING
21 2" THREADED BALL VALVE INTO DRUM WASHER
22.. 2" THREADED UNION
23.. 2" FLEX CONNECTOR
24. 2" THREADED UNION
26. 2" THREADED CONNECTION
27. 2" THREADED CONNECTION
28. 1.5" THREADED CONNECTION @ PUMP
30. 1.5" THREADED BALL VALVE
31. 2" THREADED CONNECTION
32. 2" THREADED CONNECTION
33. 1.5" THREADED CONNECTION @ PUMP
34. 2" CONNECTION
36.. 3" BACK FLOW VALVE
37.. 3" BACK FLOW VALVE W/QUICK CONNECT
38. 2" CONNECTION
40 38" DIA. MANWAY ACCESS CHAMBER
41. EMERGENCY SHUT OFF VALVE
42 3" BALL VALVE
43 1.5" UNION TO 1.5" TO 2" COUPLING ASSY
44 COUPLING ASSEMBLY
45 7" DIAMETER BASKET STRAINER
46 2" BALL VALVE W/FLANGE
47 2" FLANGE AND NIPPLE
010. DW #2 RECIRCULATION PUMP
020. DW #1 RECIRCULATION PUMP

DESCRIPTION NOTE: ALL FITTINGS ARE WELDED UNLESS NOTED ABOVE

PROPRIETARY STATEMENT

THIS DRAWING IS THE EXCLUSIVE PROPERTY OF SAFETY-KLEEN SYSTEMS, INC. AND IS PROPRIETARY AND CONFIDENTIAL INFORMATION. THIS DRAWING AND THE INFORMATION CONTAINED THEREIN MUST NOT BE DUPLICATED, USED, DIVULGED, REPRODUCED, COPIED, DISCLOSED OR APPROPRIATED IN WHOLE OR IN PART FOR ANY PURPOSE OTHER THAT AS EXPRESSLY AUTHORIZED BY SAFETY-KLEEN SYSTEMS, INC. THIS DRAWING MUST BE RETURNED PROMPTLY UPON REQUEST.

Project Solutions Companies
2005 West Broadway • Suite 210 • Columbia • MO 65203
• Phone: (573) 443-7100 • Fax: (573) 443-7181 •

ENVIRONMENTAL PIPING FOR USED MINERAL SPIRITS

NO.	DESCRIPTION	BY	CHK	APPR	DATE
2	REVISE TAGGING	JEK	GD	GD	090910
1	USED MINERAL SPIRITS PIPE TAGGING	GAS			080202

REVISIONS

SAFETY-KLEEN SYSTEMS, INC.
5360 LEGACY DR. BLDG. 2 SUITE 100 PLANO, TX. 75024 800-669-5740

SCALE	BY	CHKD	P.E. APPR	DP. APPR	DATE
NONE					

SERVICE CENTER BRANCH AT: N.LAS VEGAS, NEVADA

STD-DWG-REV NO.: 964-4000-PB-301