GEI Consultants

Geotechnical
Environmental and
Water Resources
Engineering

Final Plans and Specifications

Groundwater Extraction, Treatment, and Infiltration System

Titanium Metals Corporation, Henderson, Nevada Facility

Prepared for:
Titanium Metals Corporation
181 North Water Street
Henderson, Nevada 89015

Submitted by:
GEI Consultants, Inc.
3159 Voyager Drive
Green Bay, Wisconsin 54311

Date: January 14, 2014

PROFESSIONAL ENGINEER-STATE OF NEVADA
JOHN M. TRAST
Exp: 6/30/2014
CIVIL
No. 22661

GEI Consultants

January 14, 2014

Geotechnical
Environmental
Water Resources
Ecological

Mr. Michael Friend, P.E.
Staff Engineer III
Special Projects Branch
Bureau of Corrective Actions
Nevada Division of Environmental Protection
2030 E. Flamingo Road, Suite 230
Las Vegas, Nevada 89119-0818

Re: Titanium Metals Corporation
Henderson, Nevada Facility
NDEP Facility ID # 000537
Transmittal of Construction Drawings and Summary of Design Changes for First Water-Bearing Zone Groundwater Remediation Program

Dear Mr. Friend:

Titanium Metals Corporation (TIMET) received an email from the Nevada Division of Environmental Protection (NDEP) dated January 10, 2014, requesting a formal submittal of the revised design plan set for the Slurry Wall and Groundwater Extraction, Treatment and Infiltration System. On behalf of TIMET, GEI Consultants is pleased to submit the project specifications and drawing sets, along with a summary of design changes from the original design approved by NDEP in 2009.

The modifications to the approved design for the First Water-Bearing Zone Groundwater Remediation Program, some of which were transmitted to NDEP in the last half of 2013, include:

1. Barrier wall alignment: The western portion of the alignment of the barrier wall (slurry wall) was altered to more closely parallel the northern property boundary (the bend to the south and west was eliminated), and the slurry wall was extended approximately 300 feet farther to the east.
2. Barrier wall profile: The slurry wall depth was increased to penetrate deeper into the Upper Muddy Creek formation (UMCf).
3. The slurry wall hydraulic conductivity objective is $1x10^{-6}$ cm/sec.
4. The effective top of the slurry wall occurs at 20 feet below ground surface (bgs).
5. Groundwater extraction is from a line of 19 extraction wells screened in the Quaternary alluvium (Qal) and extending approximately 3 to 5 feet into the UMCf.
6. For an interim period of approximately 2 years during which time the metals/dissolved solids groundwater treatment units will be designed, procured and constructed, treated groundwater discharge will be to a series of temporary injection trenches located within the Qal along the downgradient side of the slurry wall.
7. The alignment of the extraction wells at the northern end of the slurry wall was modified to mirror the slurry wall alignment, and was angled toward the wall to assist with removal of groundwater that may flow westerly along the slurry wall.

GEI Consultants, Inc.
90B John Muir Drive, Suite 104, Amherst, NY 14228
716.204.7154

8. Extraction well pumps were changed from pneumatic to electric with a pressure transducer for control of the pumping. The pump on and off levels can be set per well. The control panel interfaces with the lift station and the air stripper to stop the well pumps if there are alarms or shutdown at those locations.
9. The groundwater extraction conveyance from the wells to the lift station is a gravity line to limit maintenance and allow flexible capacity. A forcemain was added from the lift station to the air stripper to maintain constant flow. These items result in the piping being modified in size and routing. In addition the piping is buried beneath final site grades to protect the pipe.
10. A lift station was added at the north end of the extraction well alignment to pump the extracted groundwater south to the air stripper location.
11. The instrumentation and control systems were modified to more adequately fit the system requirements.

Design modifications 1 through 6 listed above were discussed in detail in a letter to the NDEP entitled, "*Proposed Design Changes for First Water-Bearing Zone Groundwater Remediation Program and Response to NDEP Comments Dated September 18, 2013,"* dated October 18, 2013, along with a follow-up letter dated November 12, 2013, responding to NDEP comments. The remaining design changes listed above are discussed in further detail below.

MODIFICATION 7: EXTRACTION WELL ALIGNMENT

As described in design modification 1, the alignment of the slurry wall was modified to more closely parallel the northern property limits, as well as to locate the wall downgradient of potential impacts (if any) associated with the Northern Storage Area. The extraction well alignment was modified from the previous design to mirror the revised slurry wall alignment, including straightening the bend at the northern portion of the alignment. At the southern end of the extraction well alignment, well EWQal-19 is now the southernmost well, whereas well EWQal-22 had previously been the southernmost well. The wells are generally located 150 to160 feet apart and approximately 100 feet upgradient of the slurry wall as was previously approved. However, the alignment of extraction wells EWQal-01 to EWQal-05, located at the northern end, was angled closer to the wall to cut off the flow of groundwater that may have bypassed the other wells and is flowing northward along the wall. At the northern end, well EWQal-01 is located approximately 25 feet from the slurry wall.

MODIFICATION 8: EXTRACTION WELL PUMPS

The previous design included the use of pneumatic well pumps in the extraction wells. To increase the level of control over the extraction well pumps, the pumps were modified to electric pumps. The pump model chosen was Model TSPPT 2-3, manufactured by EPG Companies, Inc., located in Maple Grove, Minnesota. The pumps are stainless steel, and have a capacity of approximately 2 to 10 gpm. The pumps are controlled by a pressure transducer that is mounted to the pump, which relays water level information to a motor starter in a control panel located at each well location. The control panel is also wired to the control panel at the lift station, and has run permission logic to prevent the extraction well pumps from operating if the lift station is shut down or at a high level alarm status. In addition to having better control over pumping and groundwater drawdown, the change to electric pumps, which remain submerged at all times, will

minimize the potential for mineral buildup that can be problematic with pneumatic pumps in groundwater with high total dissolved solids (TDS) concentrations.

MODIFICATION 9: EXTRACTION CONVEYANCE AND FORCEMAIN PIPING

The previous design included buried 3-inch diameter HDPE forcemain pipe from the extraction wells to the air stripper, which was located near the center of the slurry wall alignment. The revised design incorporates both gravity flow and forcemain HDPE piping. Each of the extraction wells discharge to a common, 6-inch diameter HDPE SDR 17 gravity pipe, which flows northward along the alignment at a slope ranging from 0.5 to 16.3 percent (average 1.5 percent). The gravity conveyance pipe discharges to a concrete lift station, which pumps the groundwater south to the air stripper via a double-wall HDPE forcemain pipe (4-inch diameter HDPE SDR 11 inside 8-inch diameter HDPE SDR 17). From the air stripper, the treated water is discharged to a series of injection trenches located on the downgradient side of the slurry wall via a 6-inch diameter HDPE SDR 17 gravity pipe with an average slope of 2 percent.

In review of the previous design NDEP had recommended the piping be placed above grade to monitor for leaks and repair as necessary. To protect the pipe and allow for maintenance traffic to travel the site relatively unhindered, it was decided to bury the pipe. The piping is buried approximately 3 feet below grade, which allows for standard H-20 loading over the pipes. In addition, the forcemain piping is double-wall pipe, which allows for monitoring of the interstitial space for leak detection. In the event that the forcemain pipe from the lift station to the air stripper needs repair, TIMET plans to install aboveground bypass piping by removing a section of pipe and making a connection in the valve vault.

The air stripper location has been revised to be situated near the Outfall Structure on site. This location was chosen based on the location of the incoming power feed, as well as the fact that TIMET maintenance personnel check this location every day. If there were a problem with the air stripper, or other system components, it would be visible on the central PLC, located at the air stripper location. In addition, there is considerable construction planned in and around the WCF area over the next two years and this allows the air stripper to run independent of those activities and potential power interruptions.

MODIFICATION 10: LIFT STATION

As described in Modification 9, the previous design consisted of each of the extraction wells pumping directly to the air stripper location. NDEP had expressed concern regarding the variable flow rate that could result from multiple pneumatic extraction pumps delivering “slugs” of water to the air stripper, and had suggested installing an equalization tank upstream of the air stripper to provide for a more steady inflow to the air stripper, particularly if biocides or scale inhibiting chemical dosing systems would be added. In similar concept, the revised design includes a concrete lift station, into which water from the 19 extraction wells is collected and pumped to the air stripper using a duplex pumping system. The lift station is located at the north end of the extraction well alignment, at the downstream end of the gravity conveyance pipe, and consists of an 8-foot-diameter concrete manhole with a depth of twelve feet from the top of the cover to the base of the manhole. The lift station has two HOMA CH436/38/2/3 pumps that are designed to operate in a lead/lag duplex mode. The pumps will be set to operate as near as possible to the inflow rate from the extraction well pumps in order to produce a consistent flow of water to the air stripper and minimize pump starts. The pumps will be controlled by a pressure transducer

installed in the lift station, with mechanical back-up floats for redundant monitoring of high and low level conditions.

The discharge from the lift station pumps flows through a valve vault, where the flow rate can be controlled and metered prior to discharge to the air stripper. In the event that problem occurs within the forcemain pipe between the lift station and the air stripper, the valve vault provides a location where, by removing a section of piping, a fitting can be installed to allow for temporary piping to be connected and routed aboveground to the air stripper until the problem is repaired.

MODIFICATION 11: INSTRUMENTATION AND CONTROLS

Due to the modification in groundwater extraction, treatment, and conveyance equipment, a number of modifications were required in regard to instrumentation and controls. These features provide the means to monitor and control the system both manually and electronically. The design rationale behind the instrumentation and controls system is summarized below.

Theory of Operation

Water is pumped from the 19 well pumps and gravity flows to the lift station, the water is pumped from the lift station to the air stripper, and gravity flows from the air stripper to the injection trenches north of the slurry wall. The well pumps, the lift station, and the air stripper automatically 'interface' in the following manner:

- If the air stripper blower fails or is not operating, the lift pump(s) are turned off or not allowed to start, respectively. The well pumps are also turned off or not allowed to start, respectively.
- If the lead lift station pump fails, the lag pump is turned on. If both the lift station pumps fail, the well pumps are shut off.
- If the lead lift station pump is operating but the water level in the lift station sump exceeds a 'high' water level, the lag pump is turned on to reduce the level. If the lift station pumps operating together cannot reduce the level and a 'high-high' water level is reached, the well pumps are shut off. The well pumps cannot restart (or be started initially) if the lift station sump is in a 'high-high' water level condition.

Well Pumps (19 total)

Each well pump includes a local control panel, which includes the motor starter for the pump. Each well includes a pressure transducer for monitoring water level in the well. This transducer is wired into the local control panel and locally turns the pump on and off, depending on an adjustable water level setting. The control panel is in a NEMA 4X stainless steel enclosure and includes a running light status and HOA switch (spring-return hand position) on the face of the panel. The 19 pumps are spread out along the slurry wall. Water is pumped from the wells and gravity drains in the 6-inch pipe to the lift station. Remote interface includes:

- Run permissive (also used to shut off the pumps)
- Pump running status (on/off)
- Well water level (analog signal)

Lift Station

The lift station includes a local control panel to operate the lift station pumps, which includes the motor starters for the pumps. The lift station has two pumps which operate in a lead-lag configuration. A pressure transducer monitors the lift station water level and turns on/off the lead pump as necessary. There is a flow meter located in the valve vault which monitors the rate that water is pumped out of the lift station. The control panel is in a lockable NEMA 4X stainless steel enclosure with air conditioner. Inside the enclosure is a 'second' enclosure. This enclosure contains the main circuit breaker, feeder breaker for external transformer/panelboard (furnished and installed by electrical contractor), motor starters, control power transformer, power supply, CompactLogix PLC, I/O cards, Ethernet switch with fiber optic port, terminal blocks and associated internal wiring. The face of this 'second' enclosure includes a running light status, HOA switch for each pump (spring-return hand position), and flow meter readout. Water is pumped from the lift station to the air stripper. Remote interface includes:

- Run permissive (also used to shut off the pumps)
- Pump running status (on/off)
- Which pump is lead/lag
- Flow meter
- Sump water level
- General alarm

Air stripper

The air stripper includes a local control panel to operate the blower on the air stripper skid, which includes the motor starter for the blower as well as a future motor starter for a discharge pump. It has transmitters to monitor sump level and incoming water flow. The control panel is in a NEMA 4X stainless steel enclosure with air conditioner and includes a running light status, high sump level light, low air pressure alarm light and HOA switch (spring-return hand position) on the face of the panel. The panel includes a Nanodac controller for control of the blower. It features an Ethernet port for monitoring purposes. The panel comes mounted to the air stripper skid. The air stripper is located near the outfall structure. Water drains by gravity from the air stripper to the injection trenches. Remote interface includes:

- Run permissive (also used to shut off the fan)
- Fan running status
- Flow meter
- Sump water level
- General alarm

The water flow into the infiltration trench is controlled via a series of manual valves. This allows the flow to be partitioned into individual trenches or all into one. If the flow to any particular trench exceeds the trench capacity, there is an overflow in the piping to allow the water to pass to an adjacent trench.

Main PLC panel

The main PLC panel is located near the air stripper. It is an NEMA 4X enclosure with air conditioner. Inside the enclosure is a 'second' enclosure. This enclosure contains a control power transformer, power supply, CompactLogix PLC, I/O cards, Ethernet switch with fiber optic port, terminal blocks and associated internal wiring. The face of this 'second' enclosure includes an HMI for monitoring and control of the entire system.

Attached to this letter are the final plans and specifications for the Groundwater Extraction, Treatment and Infiltration System. It was divided into two projects, (1) groundwater extraction, treatment, and conveyance system and (2) slurry wall based on the way the contract was bid out. Also attached are correspondence, supplemental figures detailing portions of the groundwater extraction system, and specifications for owner-procured equipment.

If you have any questions regarding this submittal, please do not hesitate to contact the undersigned at (716) 204-7158 (email: kmcintosh@geiconsultants.com) or Mr. Richard Pfarrer of TIMET at (702) 566-4453 (email: Richard.Pfarrer@Timet.com).

Sincerely,

GEI Consultants, Inc.

Kelly R. McIntosh, Ph.D., EM-2199 (exp. 9/24/15)
Senior Consultant

Attachments:

1. Correspondence
2. Groundwater Extraction System Specifications and Drawings
3. Slurry Wall Specifications and Drawings
4. Owner Procured Equipment Specifications
5. Supplemental Drawings

cc: Richard Pfarrer – TIMET, hard copy and electronic copy
Richard Truax – GEI, electronic copy
JD Dotchin, Nevada Division of Environmental Protection, Las Vegas, Nevada, electronic copy
BMI Compliance Coordinator, Nevada Division of Environmental Protection, Las Vegas, Nevada, hard copy and electronic copy
Nevada Division of Environmental Protection, c/o McGinley and Associates, Inc., 815 Maestro Drive, Reno, Nevada 89511, hard copy and electronic copy
Nevada Division of Environmental Protection, c/o McGinley and Associates, Inc., 6280 South Valley View Boulevard, Suite 604, Las Vegas, Nevada 89118, hard copy and electronic copy
Jeff Gibson – AMPAC, by electronic mail

Mark Paris – BMI, by electronic mail
Lee Farris – BMI, by electronic mail
Ranajit Sahu – BMI, by electronic mail
Joe Kelly – Montrose, by electronic mail
Paul Sundberg – representing Montrose, by electronic mail
Jay Steinberg – NERT, by electronic mail
Allan DeLorme – NERT, by electronic mail
John Pekala – NERT, by electronic mail
Curt Richards – Olin, by electronic mail
Jay Gear – Olin, by electronic mail
Ed Modiano – OSSM GWTS, by electronic mail
Chuck Elmendorf –Stauffer, by electronic mail
Nick Pogoncheff –Stauffer, by electronic mail
George Crouse –Syngenta, by electronic mail
Enoe Marcum – WAPA, by electronic mail

JURAT

I hereby certify that I am responsible for the services described in this document and for the preparation of this document. The services described in this document have been provided in a manner consistent with the current standards of the profession and to the best of my knowledge comply with all applicable federal, state and local statutes, regulations and ordinances.

For the services provided and attested to with this Jurat including preparation of a summary of design changes for First Water-Bearing Zone Groundwater Remediation Program

GEI CONSULTANTS, INC.

Kelly R. McIntosh
Senior Consultant
Nevada Certified Environmental Manager
EM No. 2199; Expires September 24, 2015

Date Signed: January 14, 2014

Attachment 1

Correspondence

Vannieuwenhoven, Mark

From: Ruetten, Michael
Sent: Monday, January 13, 2014 4:06 PM
To: Vannieuwenhoven, Mark
Subject: FW: TIMET GW Extraction System Comments

From: Michael P. Friend [mailto:mpfriend@ndep.nv.gov]
Sent: Thursday, December 12, 2013 6:47 PM
To: Pfarrer, Richard (Richard.Pfarrer@Timet.com); Ruetten, Michael; McIntosh, Kelly; James Dotchin
Subject: TIMET GW Extraction System Comments

Dick,

After taking a closer look at the extraction system, we have provided some preliminary comments that TIMET should consider. I wanted to get these to you before I leave for vacation. We will provide more formal comments after I return that also include operating the system that we can discuss after the new year.

1. It is not clear how automated the system is. How would TIMET respond to a high level alarm in the wet well? Is there enough time to respond to the high level alarm before the wet well overflowed in the event of a complete power failure to the lift station? One suggestion would be that once a high level alarm is triggered, the extraction wells would automatically shut down. It doesn't seem like there is enough storage in the wet well that you would have enough time to manually turn off all the well pumps. The other solution would be to have back-up power and pump that could be connected to a quick-connect at the lift station in the event the lift station was inoperable.

2. TIMET should consider the maintenance and cleaning of the pipes and having to possibly descale the pipelines in the future into their design.

3. A permanent quick-connect bypass should be installed at the lift station.

4. There is no infiltration test information on the injection trenches. The clogging is almost universal issue for the BMI area, especially for the water injected with very high TDS. We understood that there are 6 injection trenches and it is unlikely that they will fail at same time. But it is good to have some bulk estimation of the infiltration capacity of each trench and update the capacity of trench based on the actual injection data.

Thank you,

Michael Friend, P.E.
Bureau of Corrective Actions
Nevada Division of Environmental Protection
2030 E Flamingo Road, Suite 230
Las Vegas, NV 89119
P: 702-486-2850 ext. 247

GEI Consultants

Calculation Cover Sheet

GEI Project	TIMET Groundwater Remedial System	
GEI Project Number	1323080	
PROFESSIONAL ENGINEER-STATE OF NEVADA JOHN M. TRAST Exp: 06/30/2014 CIVIL No. 22661	By: John M. Trast, P.E.	Date 01/08/2014
	Checked By Michael G. Ruetten, P.E.	Date 01/08/2014

PURPOSE OF CALCULATIONS

Determine the maximum infiltration rate of each infiltration gallery/trench for the groundwater remediation system.

METHOD

The design method is outlined by Dr. Joel W. Massmann, Ph.D. P.E. in the final research report, *A Design Manual for Sizing Infiltration Ponds*, prepared for the Washington State Transportation Commission, Department of Transportation and the US Department of Transportation, Federal Highway Administration, dated October 2003.

RESULTS

The soil properties for the Quaternary Alluvium (QAL) soils of the upper most aquifer at the TIMET Henderson Facility are describe in numerous exploration reports. The physical properties described in the Daniel B. Stevens & Associates, Laboratory Report for TIMET Beta/NW Ditch – Chartis Samples, dated June 2, 2011 were used in the evaluation of the groundwater remedial system infiltration galleries/trenches. The entire range of reported hydraulic conductivities of the soils was evaluated to understand the variability in infiltration rate. The hydraulic gradients were estimated based on the Green-Ampt equation and regression equation developed by Massmann (2003).

Based on variability in the hydraulic conductivity of the QAL soils and the estimate of hydraulic gradient based on the saturated/unsaturated flow model, each infiltration gallery or trench is expected to infiltrate 11 to 171 gallons per minute (gpm), with the more probable range of 22 to 129 gpm. By installing 6 infiltration galleries/trenches in series, the capacity will be between 132 to 774 gpm. This capacity will be sufficient to handle the anticipated flow rate from the 19 extraction wells during the timeframe when the infiltration trenches are in use (2014-2015).

GEI Consultants

Project	1323080	Page	1 of 6
Client	TIMET	By	JXT	Date	1/8/2014
Subject	INFILTRATION GALLERY	Checked	MGR	Date	1/8/2014
		Approved		Date	

DETERMINE THE MAXIMUM INFILTRATION RATE OF EACH INFILTRATION GALLERY

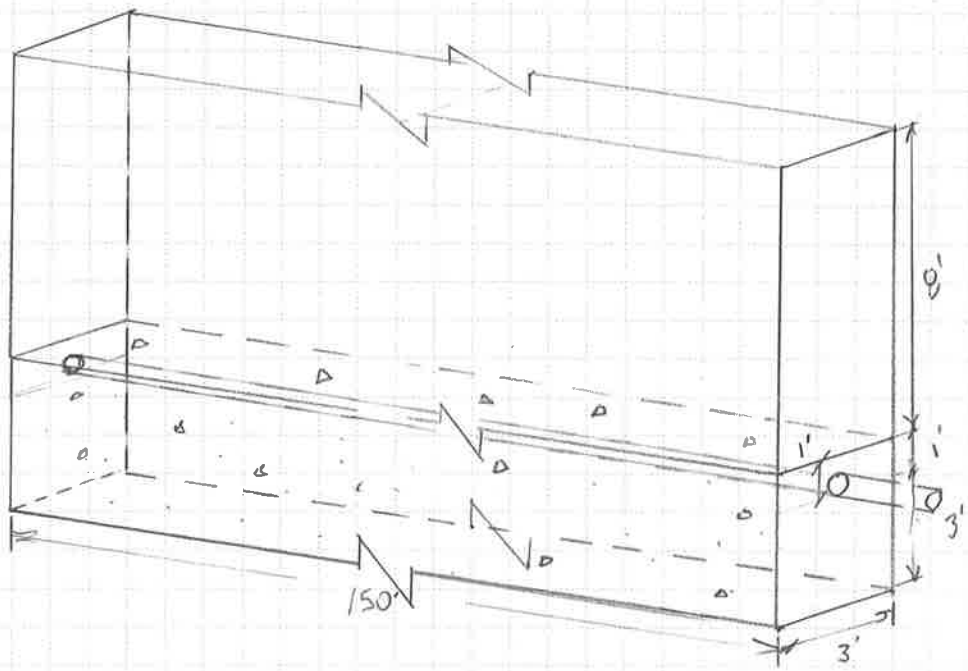

ASSUMPTIONS

① Native silty sand is homogeneous and isotropic

② Groundwater table based on the slurry wall borings is approximately 20-30' beneath the bottom of the infiltration gallery

③ The confining layer is 10' deeper than the groundwater table

④ Based on Daniel B. Stephens & Associates, Inc. (2011) laboratory testing program the silty sand has the following physical properties: Classification: SP-SM to SM

$\gamma_d = 100 pcf$ $\omega = 12\%$

$\gamma = 112 pcf$ $n = 0.47$

$K = 1.6 \times 10^{-2}$ cm/s to 4.9×10^{-4} cm/s Range of K (DBS&A 2011)

⑤ Assume the saturated hydraulic conductivity is a conservative approximation of the unsaturated hydraulic conductivity

⑥ Estimate the hydraulic gradient using method developed by (Massmann 2003)

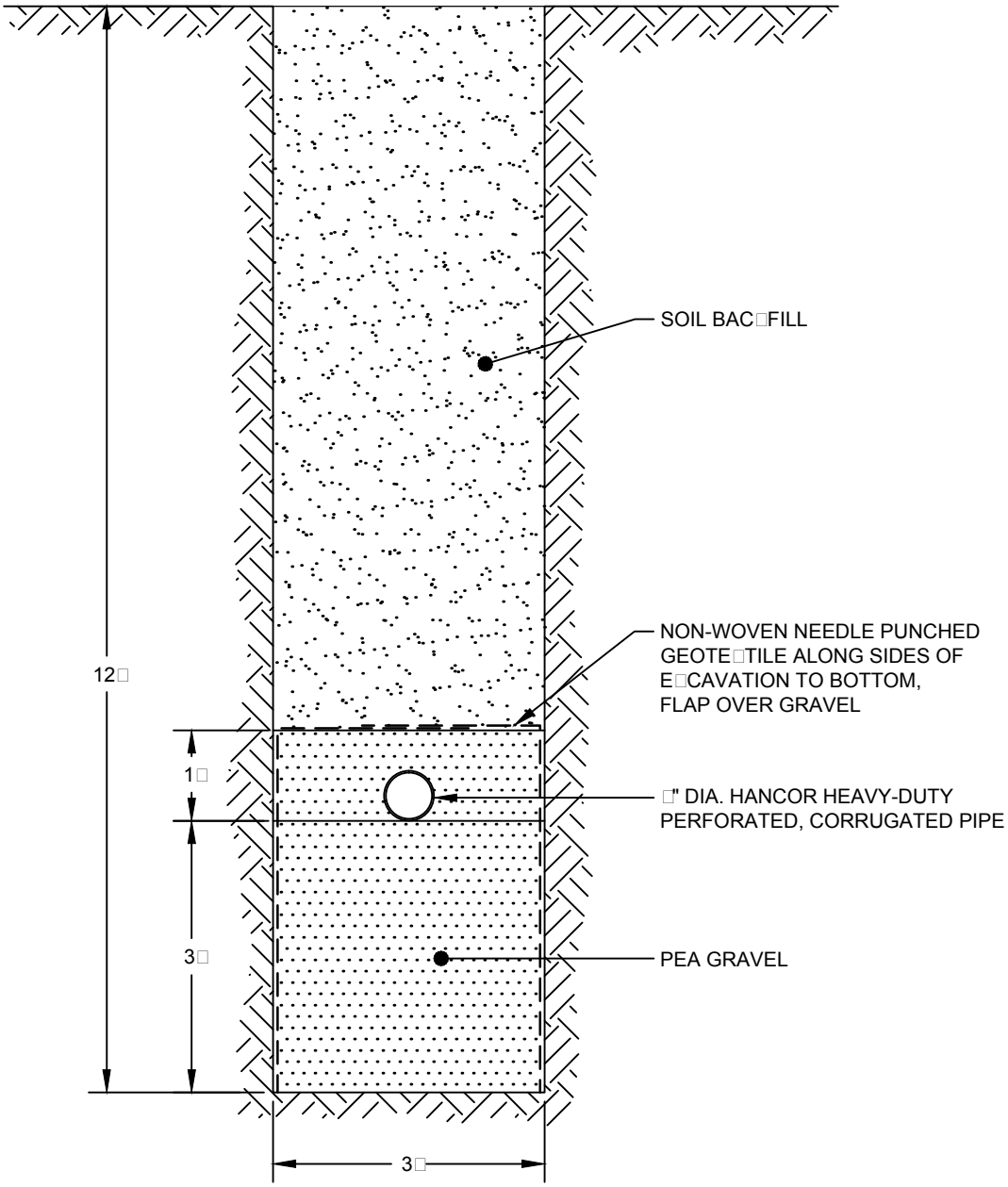

INJECTION TRENCH DETAIL

SCALE: 1"□2□

Titanium Metals Corporation Black Mountain Industrial Center	GEI Consultants	INJECTION TRENCH
1□1 North Water Street Henderson, Nevada	Project 13230□0	July 2013 Fig. 1

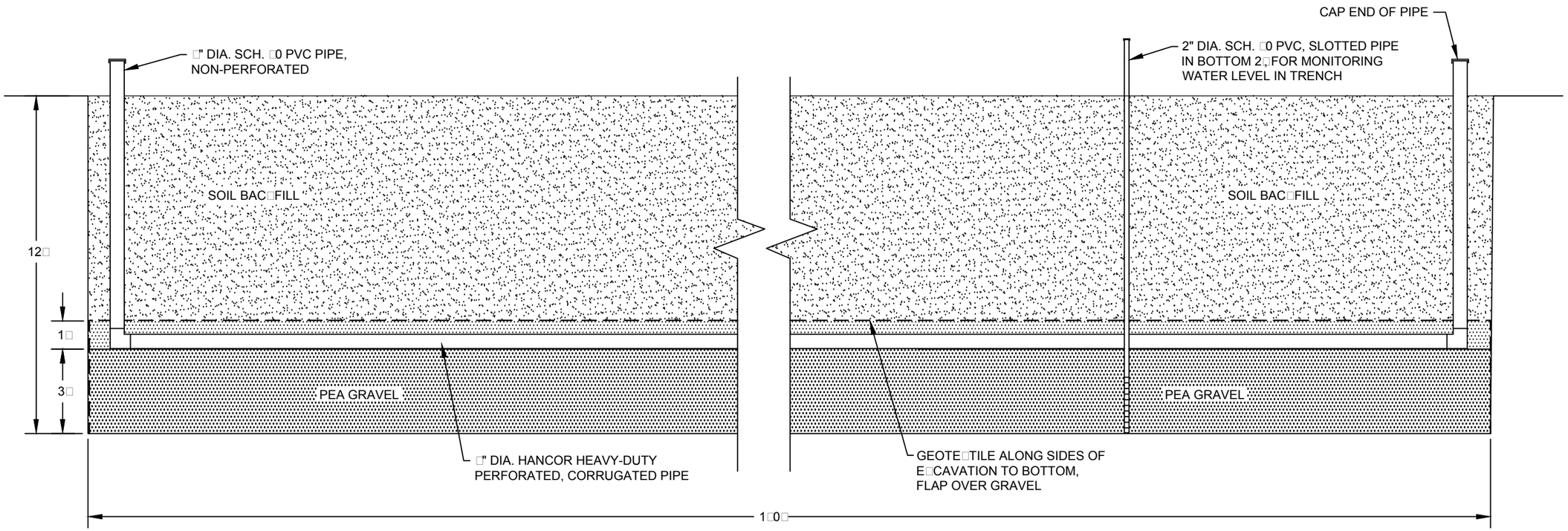

INJECTION TRENCH SECTION

SCALE: 1"□□□

NOTES

1□ INJECTION TRENCHES □□□WILL BE 1□0□LONG SEPARATED BY 20□OF NATIVE SOIL.

2□ INJECTION TRENCHES □□□WILL BE LOCATED 30□DOWN GRADIENT OF SLURRY WALL UNLESS SITE CONDITIONS □POWER LINE OFFSET RE□UIREMENTS FORCE A CHANGE IN A LOCATION.

Titanium Metals Corporation Black Mountain Industrial Center	GEI Consultants	INJECTION TRENCH
1□1 North Water Street Henderson, Nevada	Project 13230□0	July 2013 Fig. 2

GEI Consultants

Client	IMWD	Project	Page 4/6
Subject	Infiltration Gallery	By XT	Date 1/8/2014
		Checked MGR	Date 1/8/2014
		Approved	Date

ESTIMATE THE INFILTRATION RATE FOR EACH GALLERY

(A) Hydraulic Conductivity - the hydraulic conductivity of the Quaternary Alluvium (Qal) Based on the (DBSFA 2011) data ranged from 1.4 to 45.4 ft/day. The mean hydraulic is 13.9 ft/day. Assume a range of 5 ft/day to 20 ft/day

(B) Hydraulic Gradient

Estimate the hydraulic gradient. The hydraulic gradient can be estimated using the Green-Ampt equation or approximated by

$$\text{gradient} \approx \frac{D_{pond} + L + h_{wf}}{L} \quad \text{(Massmann 2003)}$$

where D_{pond} = depth of ponded water in the trench
L = depth to the wetting front
h_{wf} = suction head at the wetting front

For sites with deep groundwater table the gradient approaches 1.0. Massmann et. al (2003) also developed a regression model for trenches to approximate the gradient

$$\text{gradient} \approx \frac{D_{wt} + D_{trench}}{78\,(K^{0.05})} \quad \text{(Massmann 2003)}$$

D_{wt} = depth in feet to water table => 20' to 30'
D_{trench} = depth of water in trench => 3 to 12'
K = hydraulic conductivity in feet/day 5 to 20 ft/day

$$\text{gradient} \approx \frac{(20 \text{ to } 30') + (4 \text{ to } 12')}{(78)\,(5^{0.05} \text{ to } 20^{0.05})} \Rightarrow 0.25 \text{ to } 0.5$$

The hydraulic gradient ranges from 0.25 to 1.0 for the infiltration trenches.

GEI Consultants

Project	1323080	Page	5/6
Client	Tinet	By	AJT	Date	1/8/2014
Subject	Infiltration Gallery	Checked	MGR	Date	1/8/2014
		Approved		Date	

ESTIMATE OF INFILTRATION RATE

$$f = K \frac{dh}{dz} \Rightarrow$$

K ft/day	i 0.25	0.5	1.0
5	1.25	2.5	5
10	2.5	5	10
15	3.75	7.5	15
20	5.0	10	20

Arithmetic and geometric mean for hydraulic conductivity in this Range.

Based on the variability of hydraulic conductivity and hydraulic gradient the infiltration rate will vary between 1.25 ft/day and 20 ft/day with an

ESTIMATE THE VOLUME PER GALLERY under normal operating conditions

$$Q = KiA$$

$$= (1.25 \text{ to } 20 \text{ ft/day})(150')(11')$$

$$Q = 2062.5 \text{ ft}^3/\text{day} \text{ to } 33{,}000 \text{ ft}^3/\text{day}$$

$$= 11 \text{ to } 171 \text{ gallons/minute/gallery}$$

Based on the range in measured hydraulic conductivities, estimated hydraulic gradients and geometry of the infiltration trenches the rate of infiltration should range between 11 and 171 gallons/minute/gallery, with the most likely range between in the 22 to 129 gpm per gallery range.

GEI Consultants

Client	Tlaxt	Project	Page 6/6
Subject	Infiltration Gallery	By	Date 1/8/2013
		Checked	Date
		Approved	Date

REFERENCES:

Massmann J.W (2003) A Design Manual for Sizing Infiltration Ponds, Final Research Report, Research Project Y8265, Washington Department of Transportation, Olympia, WA 2003.

Daniel B. Stephens & Associates (2011) DBS&A Laboratory Report for TIMET Beta/NW Ditch – Chantis Samples, Henderson Nevada, June 2, 2011.

Attachment 2

Groundwater Extraction System Specifications and Drawings

Geotechnical
Environmental and
Water Resources
Engineering

Technical Specifications

Groundwater Extraction, Treatment, and Infiltration System

Titanium Metals Corporation, Henderson, Nevada Facility

Prepared for:
Titanium Metals Corporation
181 North Water Street
Henderson, Nevada 89015

Submitted by:
GEI Consultants, Inc.
3159 Voyager Drive
Green Bay, Wisconsin 54311

Date: November 21, 2013

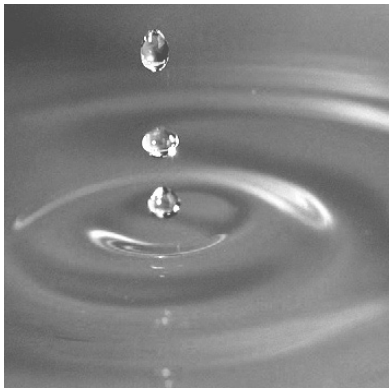

SECTION 00002

PROJECT DIRECTORY

PROJECT:	Groundwater Extraction, Treatment, and Infiltration System
PROJECT LOCATION:	Titanium Metals Corporation 181 North Water Street – Gate 3 Henderson, Nevada 89015
OWNER:	Titanium Metals Corporation PO Box 2128 Henderson, Nevada 89009 Phone: (702) 564-2544 Attn: Mr. Jeff Searls
ENGINEER:	GEI Consultants, Inc. 3159 Voyager Drive Green Bay, Wisconsin 54311 Phone: (920) 471-4953 Attn: Mr. Mark J. Vannieuwenhoven, P.E.

END OF SECTION

SECTION 00005

TABLE OF CONTENTS

		Pages Through
INTRODUCTORY PAGES		
00001	Cover Page	00001-1
00002	Project Directory	00002-1
00005	Table of Contents	00005-1
00116	Invitation to Bid	00116-2
BIDDING REQUIREMENTS		
00400	TIMET Request for Quotation for Construction Services	00400-20
00410	Bid Schedule	00410-3
00440	General Contractor	00440-1
00441	Fabricators, Suppliers, and Subcontractors	00441-1
00460	Description of Project Approach	00460-1
TECHNICAL SPECIFICATIONS		
Division 1 - GENERAL REQUIREMENTS		
01010	Summary of Work	01010-4
01015	General Requirements	01015-4
01019	Physical Conditions	01019-1
01040	Project Administration	01040-4
01050	Field Engineering and Surveying	01050-3
01275	Measurement and Payment	01275-9
01300	Submittals	01300-5
01400	Quality Assurance and Quality Control	01400-2
01500	Site Requirements, Construction Facilities, and Temporary Controls	01500-4
01560	Protection of Environment	01560-2
01900	Site Health and Safety	01900-4
Division 2 - SITE WORK		
02080	Materials Management	02080-6
02200	Earthwork	02200-5
02324	Trenching and Backfilling	02324-3
02521	Abandonment of Existing Pipes	02521-2
02821	Chain Link Fences and Gates	02821-8
Division 3 - CONCRETE		
03300C	Cast-in-Place Concrete	03300-4

Division 11 - EQUIPMENT

11300	Groundwater Extraction Pumps	11300-3
11317	Submersible Pump Station	11317-9

Division 13 - SPECIAL CONSTRUCTION

13440	General Provisions for Instrumentation and Controls	13440-4
13442	Instrument and Control Panel Construction	13442-5
13453	Panel and Field Devices	13453-6

Division 15 - MECHANICAL

15079L	High Density Polyethylene Pipe	15079-6

CONSTRUCTION DRAWINGS

Drawing C-1	Title Sheet
Drawing C-2	General Notes, Abbreviations and Legend
Drawing C-3	Existing Site Conditions
Drawing C-4	Construction Plan
Drawing C-5	Extraction System Plan and Profile (1 of 5)
Drawing C-6	Extraction System Plan and Profile (2 of 5)
Drawing C-7	Extraction System Plan and Profile (3 of 5)
Drawing C-8	Extraction System Plan and Profile (4 of 5)
Drawing C-9	Extraction System Plan and Profile (5 of 5)
Drawing C-10	Infiltration System Plan and Profile (1 of 3)
Drawing C-11	Infiltration System Plan and Profile (2 of 3)
Drawing C-12	Infiltration System Plan and Profile (3 of 3)
Drawing C-13	Cross-Sections
Drawing C-14	Lift Station and Tray Air Stripper Details
Drawing C-15	Trench and Piping Details
Drawing C-16	Trench and Piping Details
Drawing E3-001	Electrical Plan Schedules
Drawing E3-002	Electrical Plan Schedules
Drawing E4-001	Electrical Plan View
Drawing E4-002	Electrical Plan View
Drawing PFD-002	Process and Instrumentation Flow Diagram

END OF SECTION

SECTION 00116

INVITATION TO BID

1.1 PROJECT INFORMATION

A. Notice to Bidders: Bidders are invited to submit bids for Project as described in this Document according to the Instructions to Bidders.

B. Project Identification: GROUNDWATER EXTRACTION, TREATMENT, AND INFILTRATION SYSTEM.

1. Project Location: Henderson, Nevada.

C. Owner: TIMET Corporation.

1. Owner's Representative: Mr. Charles Thomas and Mr. Jeff Searls

D. Construction Manager: To be named.

E. Contractor/Installer: To be named.

F. Project Description: Project consists of supply and installation of a groundwater extraction system that will collect and convey site groundwater collected by a series of nineteen (19) extraction pumps (wells installed by others) to an air stripper for removal of volatile organic compounds (VOCs). HDPE gravity drain piping will convey the water from the extraction wells to a duplex lift station, which will pump the water to the air stripper via an HDPE forcemain pipe at 50 to 100 GPM. Water discharged from the air stripper will gravity flow to a series of injection trenches located outside of a slurry wall. This base bid scope of work will include: supply and installation of gravity and forcemain piping, installation and connection of the groundwater extraction wells, lift station, and air stripper purchased by TIMET, and supply and installation of valves, electrical conduit and wiring, and instrumentation and controls.

G. Vendor Contracts: Procurement, fabrication, assembling and delivery of **groundwater extraction pumps**, a **package lift station** and an **air stripper** to the Henderson site. Vendor services during installation and commissioning in accordance with the specifications.

1.2 BID SUBMITTAL AND OPENING

A. Owner will receive proposals and associated bids until the bid time and date at the location indicated below. Owner will consider bids prepared in compliance with the Instructions to Bidders issued by Owner, and delivered as follows:

1. Bid Due Date: December 6, 2013
2. Bid Time: **2:00 p.m.**, PST.
3. Location: 181 North Water Street – PO Box 2128 – Henderson, NV 89015.

B. Bids will be thereafter privately opened.

1.3 BID SECURITY

A. Bid security is not required. No bids may be withdrawn for a period of **60** days after opening of bids. Owner reserves the right to reject any and all bids and to waive informalities and irregularities.

1.4 PREBID CONFERENCE

A. A prebid meeting will be conducted at the site on November 25, 2013, at 10:00 AM PST. The meeting will start at the TIMET main office building at Gate 3.

1.5 TIME OF COMPLETION

A. Bidders shall begin the Work on receipt of the Notice to Proceed and shall complete the Work within the Contract Time.

1.6 BIDDER'S QUALIFICATIONS

A. Bidders must have procured, assembled, and delivered system of equal operation to the system requested by the Owner.

B. Bidders must be properly licensed under the laws governing their respective trades and be able to obtain insurance and bonds required for the Work. **A Performance Bond, a separate Labor and Material Payment Bond, and Insurance in a form acceptable to Owner will be required of the successful Bidder.**

END OF DOCUMENT 00116

TITANIUM METALS CORPORATION
HENDERSON, NEVADA

REQUEST FOR QUOTATION FOR CONSTRUCTION SERVICES
5T

Rev Number: 1 Date: 11/21/2013

Groundwater Extraction, Treatment, and Infiltration System
PROJECT NUMBER: 1323080

RFQ ISSUE DATE:	**11/21/2013**
PRE-BID MEETING DATE:	**11/25/2013, 10:00 am (Required)**
BIDS DUE DATE:	**12/6/2013, 2:00 pm**
ANTICIPATED AWARD DATE:	**12/16/13**
PROJECT START DATE:	**1/6/2014**
SUBSTANTIAL COMPLETION:	**3/7/2014**
FINAL COMPLETION:	**3/14/2014**

OWNER CONTACTS

Project Manager

Jeff Searls
Phone: 702-564-2544 x284
Fax: 702-564-1704
E-Mail: jeff.searls@timet.com

Engineer

George Onorato, P.E.
Phone: 813-404-6688
Fax: 702-564-1704
E-Mail: gonorato@geiconsultants.com

TABLE OF CONTENTS

1 Definitions 3

2 Pre-bid Meeting 3

3 Construction Documents 4

4 Revision and Substitutions to Construction Documents 4

5 Bidder's Representation for Price and Schedule 4

6 Safety Requirements 5

7 Housekeeping and Quality Requirements 6

8 Scope of Work 7

9 Submitting of Bids 12

10 Consideration of Bids 13

11 Awarding of Bid 13

12 Extra Work Request 14

13 Service Provider Insurance Requirements 15

14 Safety and Health Screening Questionnaire 16

15 Drawing Reference 17

16 Specification Reference 18

17 Bid Item Breakdowns 19

1 Definitions

1.1 **Owner:** Titanium Metals Corporation (TIMET) owns the property where the project will be constructed. The owner's physical address is 181 North Water Street - Gate 3, Henderson, Nevada 89015 and the mailing address is P.O. Box 2128 Henderson, Nevada 89009. Telephone: (702) 564-2544.

1.2 **Representative:** The Owner employee or engineer assigned to this particular project, acting either directly or through his authorized assistants, such assistants acting within the scope of the particular duties assigned to them. Owner may designate a "**field**" Representative and also a "**project**" Representative (each of whom shall be considered Owner's "Representative") to represent it in the various phases of the work to be done hereunder.

1.3 **Bid:** A complete and properly signed proposal to do the project for the sums stipulated therein and submitted in accordance with the Construction Documents. For OWNER's tax purposes, bid prices shall be subdivided into three categories: Material, Equipment and Labor. Taxes should be calculated as a separate line item shown on bid item breakdown.

1.4 **Qualified Bidder (Prime Contractor):** A person or entity that has completed a NDA – Non-Disclosure Agreement and meets all Insurance, licensing and bonding requirements that submit a bid for the entire project. Each Bid shall list all State and County Contractor's licenses showing the number of the license, the classification of trade and any condition or restriction, which has been placed upon the license by the Regulatory Board.

1.5 **Qualified Sub-Bidder (Sub-Contractor):** A person or entity that submits a bid to the bidder for materials, equipment or labor for a portion of the project. Sub-contractor must meet all the same insurance and licensing requirements defined as a Qualified Bidder.

1.6 **Construction Documents:** Construction documents include drawings listed in Section 15, specifications, and supplemental information as provided by owner.

1.7 **Project:** Work defined in the construction documents.

1.8 **Work:** All labor, supervision, tools, equipment, consumables, technical and professional services, materials, supplies, and articles, as well as the performance of all operations and incidentals necessary to complete the project as described in construction documents.

2 Pre-bid Meeting

2.1 All qualified bidders and Sub-bidders must attend a pre-bid meeting at the day and time designated on the cover page of this RFQ document.

2.2 During the pre-bid meeting, the bidder will be able to ask questions about the project and visit the project site. Bidder must bring personal protection equipment to gain access to project site which includes safety glasses with side shields, hard hat and steel toe boots, and escape respirator.

2.3 To eliminate multiple site visit walks of the project, bidder must have all sub-bidders attend the pre-bid meeting. Additional walks of the project site will be granted only if deemed necessary by OWNER's representative.

2.4 The bidder may request additional site inspections from 7:30 AM to 2:30 PM Monday thru Thursday and must request entry onto the Henderson facility not less than one (1) working day prior to the date of the visit. The Bidder shall not inspect the site without prior permission from the Owner's representative.

3 Construction Documents

3.1 All Qualified Bidders will receive one set of Construction documents. Sub-bidders will not be issued construction documents unless specifically offered by the Owner.

3.2 Bidders shall use complete sets of construction documents in preparing bids. Neither the Owner nor the Engineer assumes responsibility for errors or misinterpretations resulting from the use of incomplete sets of construction documents.

3.3 Bidders may obtain additional sets of construction documents from OWNER'S ENGINEER. In making additional copies of the construction documents available on the above terms, the Owner and the Engineer do so only for the purpose of obtaining bids on the work and do not confer a license or grant permission for any other use, reproduction or sale of the documents.

3.4 Bidders and Sub-Bidders requiring clarification or interpretation of the construction documents shall submit to the Owner at least three (3) working days prior to the bid due date in writing as an RFI. The RFI will be answered within two (2) working days and shall be part of the construction documents. Only documented clarifications or interpretation to the construction documents will be accepted to alter the price or schedule.

3.5 The materials, products and equipment described in the construction documents establish a standard of required function, dimension, appearance and quality to be met by any proposed substitution.

4 Revision and Substitutions to Construction Documents

4.1 Any changes of the construction documents shall be made by revision.

4.2 All revisions to the construction documents will be mailed or delivered to all Qualified Bidders. Based on complexity of revision, owner may extend bid date as needed.

4.3 No substitution will be considered prior to receipt of Bids unless the Owner receives a written request for approval from the Owner at least three (3) days prior to the Bid date. Such requests shall include the name of the material or equipment for which it is to be substituted and a complete description of the proposed substitution including drawings, performance and test data, and other information necessary for performance evaluation. The burden of proof of the merit of the proposed substitution is upon the proposer. The Owner's decision to approve or disapprove the proposed substitution shall be final.

4.4 If the Owner approves a proposed substitution prior to receipt of Bids, such approval will be set forth in a revision to the construction documents.

5 Bidder's Representation for Price and Schedule

5.1 The bidder has read and understands the construction documents. Any questions or concerns have been submitted in writing by means of an RFI (Request for Information) and have been addressed by OWNER in writing.

5.2 The bidder has visited the site, become familiar with existing conditions under which the work is to be performed and has correlated the bidder's personal observations with the requirements of the proposed construction documents.

5.3 Contractor has read and understands the **Safety Requirements** detailed in section 6 of this RFQ document that may impact the price and schedule of the bid.

5.4 Contractor has read and understands the **Housekeeping and Quality** requirements detailed in section 7 of this RFQ document that may impact the price and schedule of the bid.

5.5 Contractor has read and understands the **Scope of Work** detailed in section 8 of this RFQ document that may impact the price and schedule of the bid.

5.6 Bidder shall acknowledge all revisions that have been incorporated within the bid price and schedule.

6 Safety Requirements

6.1 OWNER is a manufacturing plant that operates 24 hours a day 7 days a week. Safety is always our number one concern not only for our employees but for all personnel that visit and perform work on site.

6.2 The following safety Training shall be incorporated into bid price and project schedule:

A. All employees and representatives (including sub-contractors, vendor reps, suppliers, etc.) are expected to attend a 30 minute site remediation ("Blues Access") training course that will be held at the TIMET facility. The "Blue Access" training course must be coordinated through GEI's on Site Safety Officer. Please contact George Onorato at (813) 404-6688 to coordinate the site access training prior to working on the site.

B. Training request must be requested 7 days in advance and include the number of employees attending the session, legible list of names and the individual designated as the onsite contact representative. Request shall be submitted in writing to the Project Engineer.

C. Once the request has been received, the Owner's representative (GEI) will schedule the training and inform the contractor of the date and time that the training will take place. Should the contractor require additional individuals be trained at a later date, the same scheduling requirements shall apply.

D. All costs incurred by the contractor related to attending and obtaining Blue Access Owner's safety training that was not included in the original bid shall be the responsibility of the contractor.

E. All Contractor employees that attending the training will receive a "Blue Card" that must be carried with them at all times when on Owner's property. Any worker that is asked to present this card and cannot, will be escorted off Owner's property until card can be produced.

- The following safety Personal Protection Equipment (PPE) shall be provided by the Qualified Bidder and incorporated into bid price and project schedule:

- All employees and representatives (including sub-Qualified Bidders, vendor reps, suppliers, etc.) are expected to have and wear personal protection equipment to gain access and work on OWNER's property which includes safety glasses with side shields, hard hat, steel toe, and escape respirator. Additional PPE shall be used as required by

the contractor's health and safety plan. All contractor employees are restricted to the designated project work area

- In addition to the above PPE for specific areas, employees are required to have special PPE for specific job duties. Bidder will be notified if these are required for this project.

- Proof of OSHA 10 regulation training must be available for review by Owner's Engineer, George Onorato, at (813) 404-6688, upon request.

6.3 Qualified Bidder shall obtain an **Excavation Permit** from Owner before any excavation of any kind, including driving stakes, etc., is to be performed during the project.

6.4 Qualified Bidder shall provide **constant** onsite supervision of employees and be responsible for all safety requirements and reporting of incidences.

6.5 Qualified Bidder shall adhere to all Lock Out, Tag Out procedures set forth by OSHA regulations and TIMET. Qualified Bidder is responsible to provide tags and locks and shall not use/borrow locks or tags from TIMET or their employees.

NOTE: Violation of Owner's safety policies or OSHA regulations may be cause for immediate removal of Qualified Bidder, sub-Qualified Bidder or their employee(s) from Owner's property.

7 Housekeeping and Quality Requirements

7.1 Work site shall be kept clean at all times to prevent any tripping hazards, interference with production, any potential process material contamination or blockage of either wheeled, overhead or foot traffic.

7.2 Owner has strict regulations concerning possession and use of any tooling, parts or equipment containing high density materials such as tungsten, tantalum, molybdenum, niobium or any metal carbide or nitride. The following precautions shall be adhered to at all times while on Owner's property:

7.3.1 It is recommended that any tooling, parts or equipment containing such materials not be used unless absolutely necessary.

7.3.2 TIG welding may be done when specifically authorized in writing by Owner's Quality Department.

7.3.3 TIG welding is prohibited at any time in the following areas:

Unit 10 – VDP Sponge Crushing	Unit 11 – Melt Shop
Unit 12 – Blending	Unit 13 – Raw Material Storage

7.3.4 No ballpoint pens are allowed on site except ones authorized and provided by OWNER.

7.3 Housekeeping and Quality requirement training is incorporated in the 3 hour safety training required per section 6.

7.4 Contractor is required to fill out a Dense Metal Declaration prior to bringing any dense metals on site and shall have a dense metal control plan to monitor and accounting of dense mentals.

7.5 Qualified Bidder shall provide **constant** onsite supervision of employees and be responsible for all housekeeping and quality requirements and the reporting of all incidences.

NOTE: Any violation of Owner's Housekeeping and Quality policies may be cause for immediate removal of Qualified Bidder, sub-Qualified Bidder or their employee(s) from Owner's property.

8 Scope of Work

A. Project Overview

Project consists of supply and installation of a groundwater extraction system that will collect and convey site groundwater collected by a series of nineteen (19) extraction pumps (wells installed by others) to an air stripper for removal of volatile organic compounds (VOCs). HDPE gravity drain piping will convey the water from the extraction wells to a duplex lift station, which will pump the water to the air stripper via an HDPE forcemain pipe at 50 to 100 GPM. Water discharged from the air stripper will gravity flow to a series of injection trenches located outside of a slurry wall. This base bid scope of work will include: supply and installation of gravity and forcemain piping, installation and connection of the groundwater extraction wells, lift station, and air stripper purchased by TIMET, and supply and installation of valves, electrical conduit and wiring, and instrumentation and controls.

Some key elements of the project include but are not limited to:

- Developing a project Health and Safety Plan and associated work plan,
- Set up of site controls and temporary facilities to support the remediation project, which would include erosion and dust control measures, water spraying facilities, de-con pads, and a 'clean' working platform, construction surveying, etc..
- Excavation and transport for disposal of excavated contaminated soil from trenching,
- Supply and transport of backfill material, compaction, and finish grading of excavations,
- Installation of groundwater extraction system components, including pumps, controls, power, transfer piping, lift station, and air stripper.
- Site work requires workers with proper OSHA HAZWOPPER training.

B. General

1. The construction documents have been prepared using standards of professional care and completeness normally exercised under similar circumstances by reputable engineering firms. They were produced assuming that the work depicted will be performed by an experienced Qualified Bidder and/or workmen who have a working knowledge of the applicable code standard and requirements and of industry accepted standard good practice. As not every condition or element is (or can be) explicitly shown on the drawings, the Qualified Bidder shall use industry accepted standard of good practice for miscellaneous work not explicitly shown.

2. The construction documents represent the finished product. They do not indicate the method of construction. The Qualified Bidder shall be solely responsible for construction

means, methods, techniques, sequences, procedures, lagging, shoring, bracing, form work, etc. as required to ensure the quality of all work and the protection of life and property during construction.

3. The Qualified Bidder shall verify all dimensions, conditions and elevations with general arrangement drawings and existing conditions and resolve any discrepancies with the Owner's project engineer prior to start of construction.

4. Typical details and notes shall apply, though not necessarily indicated at a specific location on the drawings. Where no details are shown, construction shall conform to similar work on the project. Details may show only one view or may omit information for clarity.

5. Specifications, notes and details on drawings shall take precedence over general notes and typical details. In the case of a conflict, the most stringent shall apply.

6. Standard and code references noted in the construction documents refer to the editions adopted by the building code specified in the construction documents.

7. The specifications and standards set forth in this package are minimum requirements. Qualified Bidder supplied materials and all work shall be performed in strict compliance with all applicable codes and local, state and federal rules and regulations covering activities described in the construction documents.

8. All inspections required by these construction documents shall be performed prior to covering up work to be inspected or final acceptance of work.

C. Quality of All Work

1. Observations and testing to verify job specifications and scope compliance may be conducted by Owner or owner's representative at any time during the project.

2. Qualified Bidder expressly assumes responsibility for ensuring that all work is performed in a thorough manner and in accordance with the highest professional and trade standards, and for producing and delivering the work product with the degree of care, skill and diligence exercised by professionals performing similar services.

D. Mechanical

1. Qualified Bidder shall provide and install all equipment necessary for the full operations of the complete groundwater system commissioning including pumps, piping, and air stripper as shown on construction documents. Qualified Bidder is to notify owner of any discrepancies that would prevent full operation of system prior to submitting bid.

2. Qualified Bidder will be responsible for the financial and schedule impacts of any discrepancies on construction documents once bids have been submitted and approved. Exceptions would be engineering design errors or equipment that is not indicated correctly in the construction documents.

3. Commissioning of individual pieces of equipment and components as well as overall systems shall be the responsibility of the Qualified Bidder. A fully commissioned piece of equipment or system component shall be deemed as such when the following items have been addressed.
   - All required utilities have been connected to the equipment and it has been verified that the utilities being supplied are of specified and adequate quantity and quality to ensure proper equipment function.
   - All connections, mechanical/electrical/controls, have been inspected and verified to be sound and installed as per manufactures and project specifications, industry standards, and to the satisfaction of the owner.
   - The equipment has been secured to adequate foundations or structures as per manufactures specifications and contract documents.
   - All installation instructions and QA/QC requirements set forth in OEM documentation and contract documents have been followed and verified by qualified personnel other than the actual installer (i.e. QA/QC staff).
   - The equipment shall function as intended by the OEM and the owner as defined in OEM documentation and contract documents.
   - The equipment or system component works within the defined system as required or envisioned by the owner and defined in the contract documents.
   - All installed equipment and system components shall be cleaned by the Qualified Bidder to achieve near new condition prior to releasing to TIMET.

   Systems can be defined as groups of equipment and components assembled together to support or achieve an overall process goal. Examples of systems are electrical feed systems, controls systems, fluid piping systems, chute-work systems, air handling systems, process systems, etc. A fully commissioned system shall consist of fully commissioned pieces of equipment, components, utilities, etc. that function together as envisioned by the owner and defined in the contract documents. Unless otherwise specified in the contract documents, products and their quality produced by a commissioned process are not a responsibility that falls under the commissioning scope of work.

E. Electrical

1. Qualified Bidder shall provide and install all electrical conduit, wire, pull boxes, terminal boxes and anchorage necessary to connect electrical power and provide electrical power to all equipment shown on construction documents. In addition to electrical power, Qualified Bidder shall provide and install all necessary controls conduit, wire, pull boxes, terminal boxes and anchorage necessary for the communication of control system. Qualified Bidder is to notify owner of any discrepancies that would prevent full operation of electrical and control system prior to submitting bid.

2. Qualified Bidder will be responsible for the financial and schedule impacts of any discrepancies on construction documents once bids have been submitted and approved. Exceptions would be engineering design errors or equipment that is not indicated correctly in the construction documents.

3. All work shall be done in accordance with local codes and the latest adopted code for the NEC – National Electrical Code, NFPA 70 – National Fire Protection Association, ANSI - American National Standards Institute and any additional specifications listed in Section 16. In the case of a conflict, the most stringent code/specification shall apply.

F. Piping and Ducting

1. Qualified Bidder shall provide and install all piping including valves, flanges, fittings, gaskets, supports and anchorage to provide transfer of liquid, gas and slurry materials from origin to distribution and destination.

2. Piping supports shall be rigid and installed to resist vertical and lateral movement. Supports shall be spaced to carry pipe and material weight but not more than 10 feet apart.

3. All work shall be done in accordance with Specifications listed in Section 16. In the case of a conflict, the most stringent code/specification shall apply.

4. Qualified Bidder is to notify owner of any discrepancies that would prevent full operation of piping system prior to submitting bid. Qualified Bidder will be responsible for the financial and schedule impacts of any discrepancies on construction documents once bids have been submitted and approved. Exceptions to Qualified Bidder's responsibilities would be engineering design errors depicting the incorrect size, type and usage.

G. Structural

1. Qualified Bidder shall provide and install all structural elements necessary to erect structural steel. Elements may include reinforcing and concrete for footings, piers and concrete decking; steel columns, beams, bracing and steel decking; bolts and any necessary welding. Qualified Bidder is to notify owner of any discrepancies that would prevent full erection of structural system prior to submitting bid.

2. Qualified Bidder will be responsible for the financial and schedule impacts of any discrepancies on construction documents once bids have been submitted and approved. Exceptions would be engineering design errors or structural members that are not indicated correctly in the construction documents.

3. All work shall be done in accordance with local codes and AISC – American Institute of Steel Construction, ACI – American Concrete Institute, IBC – International Building Code, ICC – International Code Council, and specifications listed in Section 16. In the case of a conflict, the most stringent code/specification shall apply.

H. Painting

1. Painting shall be done by the fabricator or equipment manufacturer per drawing requirements or specifications listed in Section 16. Exception: Painting of existing equipment and piping can be painted on site provided that appropriate and TIMET approved environmental precautions are followed.

2. Field or site painting will only be allowed for touch up or as deemed necessary and agreed upon by the Owner. All authorized field and touch up painting must be done with the same color, specification and quality as the original paint.

3. Qualified Bidder shall adhere to the requirements of this section with the following exceptions.
    a. Touchup painting will be the responsibility of TIMET; however, Qualified Bidder shall make every effort to minimize the amount of touchup paint required. Qualified Bidder shall remove all weld splatter and burn marks with sanding and/or wire brush.
    b. Qualified Bidder will be held responsible, and may be back charged for, excessive damage to painted components or unnecessary removal of weld spatter and burn areas.

I. Work and Project Schedule

1. Qualified Bidder shall provide construction equipment, tool, materials and work force to the project site sufficient to commence and sustain construction activity necessary to perform all tasks relating to the project work and to meet required schedule and completion date.

2. Qualified Bidder shall perform all tasks relating to the work as expressed or reasonably implied by the construction documents.

3. Close coordination between construction personnel, Owner' representative, and other site contractors is required while work is in progress. Work to be scheduled as specified below. Any work outside of this work window must be approved by the Owner's point of contact.

4. The Qualified Bidder is to provide a detailed Gantt chart project schedule, showing how they intend to complete the various phases of the project, with their bid submission.

5. The Qualified Bidder must perform the work with full consideration to the Owner's production schedule and production activity.

6. During each phase, Qualified Bidder shall have a dedicated, non-working superintendent on site at all times.

Note: TIMET will make every attempt to allow construction to be done sequentially without time lapses; however, the Qualified Bidder shall plan for the potential of interruptions to continuous work after the completion of each phase without additional charges to TIMET.

This Project is to be performed as if Time is of the Essence

Additional Notes to the Scope of Work:

1) This scope of work has been provided as a convenience to the Qualified Bidder and may not be complete. Omission of items from the scope of work that are represented on the construction documents does not relieve the Qualified Bidder of responsibility of those omitted items.

2) Qualified Bidder shall adhere to the requirements of section 7 of this document, with the following additions and requirements.
   a. Qualified Bidder shall provide for a dedicated cleanup crew at the end of each work day to thoroughly clean all work areas to a level consistent with the cleanliness of the area where work is performed. Consumable items such as scrap, welding rods, trash, etc. shall be removed from the work area.

   b. Qualified Bidder shall tarp and shield as necessary or directed by TIMET representatives to insure that no construction debris or consumables leave the work area in an uncontrolled manner. Debris or consumables have the potential to contaminate the active process' taking place.

3) The Qualified Bidder is responsible for the removal and relocation of demolished material to a designated site on TIMET property. The Qualified Bidder shall obtain written permission from TIMET prior to any removal of demolition material from TIMET's property including but not limited to copper wire, scrap metal, piping, etc.

4) Only major equipment has been included in the equipment lists. All other items necessary to complete the project as described in the bid documents shall be the responsibility of the Qualified Bidder unless noted otherwise on plans.

9 Submitting of Bids

9.1 Bids shall be submitted on the Bidder's letterhead or Bidder's form, and shall include the Health and Safety Screening Questionnaire in Section 14, the Bid Item Breakdown Form in Section 17, Section 00440 General Contractor form, Section 00441 Subcontractor form, Section 00460 Description of Project Approach, Section 01040 Project Administration – Overall Construction Schedule.

9.2 Each copy of the Bid shall include the legal name of the Bidder and statement that the Bidder is a sole proprietor, partnership, corporation or other legal entity. Each copy shall be signed by the person or persons legally authorized to submit for the Bidder.

9.3 The submission of the Bids shall be made prior to the date and time that is noted on the cover page of this RFQ. The Bids shall be submitted electronically to the ENGINEER at email address: mvannieuwenhoven@geiconsultants.com and TIMET at email address Jeff.Searls@Timet.com. Bids can be mailed to the TIMET address: Attn: Jeff Searls, Titanium Metals Corporation, 181 North Water Street, Henderson, Nevada 89015. The electronic transmission of the bids must be submitted by the bid due date and time. A follow-up hard copy version shall be received by no later than close of business on December 9, 2013. If mailed the postmark date shall be considered as date of submission. The Bidder shall assume full responsibility for timely delivery. Bids that are submitted after the date and time may still be considered for acceptance; however the Owner may reject any bid for late delivery.

9.4 All must be in writing by approved method defined in section 9.2. Verbal bids will not be accepted.

9.5 A Bid may not be modified, withdrawn or canceled by the Bidder after submitting of Bid unless the Owner decides that the Bidder has made a mistake and that by reason of the mistake, the Bidder may be damaged. The mistake cannot be of moral base or a failure to consider construction documents.

9.6 All submitted Bids shall become the property of the Owner.

10 Consideration of Bids

10.1 The Owner shall maintain strict confidentiality to protect the content of the Bids from disclosure to other Bidders or parties related or unrelated to the Project. Owner reserves the right to question individual bidders on information provided in the bid.

10.2 The Owner shall have the right to reject any Bid not accompanied by the proper documentation as noted in section 9.1.

10.3 The owner has the right to reject all bids that do not meet the budget or the intent of the Project.

10.4 As noted above, the Owner reserves the right to reject all Bids and may request a re-bid from those Bidders who have already submitted Bids or from Bidders who have not yet Bid the Project.

11 Awarding of Bid

11.1 The Owner shall notify the successful Bidder as soon as the Owner has reviewed all Bids and is satisfied that the Bidding process has met the needs and interests of the Owner.

11.2 The bidder shall provide to the owner within five days from the date of notification the following for the successful Qualified Bidder and all sub-Qualified Bidders:

A. Current year State of Nevada DEPARTMENT OF TAXATION business license.

B. Current year Clark County Business License.

C. Proof of Nevada State Contractor's License consistent with the work scope requirements.

D. Certificate of Insurance that meets the contractor's insurance requirements per the attached document section 13.

E. EMR/OHSA Form.

F. Labor, material, and equipment charge rates for any time and material work.

G. List of work to be performed with the Bidder's own forces and a list of work and sub-Qualified Bidders that will be done by others.

H. Names of the manufacturers, products and the suppliers of principal items or systems of materials and equipment proposed for the project.

The information noted in sub-sections 11.2 – A, B, & D is required for any company entering Owner's property.

The Owner may reject any person or entity that the bidder proposed. If the Owner cites the objection to the Bidder, the Bidder may withdraw the Bid or submit an acceptable substitution.

Persons and entities proposed by the Bidder and to whom the Owner and Engineer have made no reasonable objection must be used on the Work for which they were proposed and shall not be changed except with the written consent of the Owner.

Note: Should the required information not be supplied or be insufficient, the award may be withdrawn and re-awarded to the next bidder.

12 Extra Work Request

Project No: _____ Date Requested: _____

Purchase Order No: _____

Change Order Number: _____

Prepared By: _____

Contractor Name/Address: _____

Brief Description of Work: (Extra Details on Separate Sheet):_____
_____
_____

Reason for Extra Work: _____
_____

Contractors Estimate:

Contractors estimate, to the best of their ability and in good faith, is as follows:

☐ Fixed Cost Amount of $_____

☐ Time and Materials – Estimated Man Hours:_____ Estimated Material Cost:$_____

Time and Material rates, if not lump sum, must be those referenced in the original project quotation. All time must be itemized by person performing the work, Work Duties, Work Hours and Total Time. Time sheets must be presented daily and approved by TIMET's Engineering Project Manager. TIMET will not be responsible for payment if billing does not include a detail list of the above items and daily approvals.

Adjustment in Price:

The payment (in an amount not to exceed the estimate stated above for increases in the Work) by TIMET to Contractor on account of such change in the Work shall be adjusted as determined by and strictly limited to the Schedule of Charges attached to the Agreement.

Completion Date:

Note: There will be no change to completion date unless prior approval has been authorized by TIMET.

Received and Authorized By:

OWNER Representative: _____ _____
Name (Signature)

Title: _____

13 Service Provider Insurance Requirements

Service Provider	Workers Compensation *	General Liability	Auto	Errors and Omissions	Other **
Engineering and General Services (no construction)	Statutory (state specified) Employer's Liability - $1,000,000 per occurrence	$3,000,000 per occurrence $5,000,000 aggregate limit Titanium Metals Corporation listed as additional insured	$3,000,000 per occurrence Titanium Metals Corporation listed as additional insured	$1,000,000 per claim $2,000,000 annual aggregate Titanium Metals Corporation listed as additional insured	Property floater (to cover all Contractor equipment)
Engineering and Construction	Statutory Employer's Liability - $1,000,000 per occurrence	$3,000,000 per occurrence $5,000,000 aggregate limit **Titanium Metals Corporation listed as additional insured**	$3,000,000 per occurrence **Titanium Metals Corporation listed as additional insured**	$1,000,000 per claim $2,000,000 annual aggregate **Titanium Metals Corporation listed as additional insured**	Property floater (to cover all Contractor equipment)
Vendor – Supply Only	Statutory Employer's Liability - $1,000,000 per occurrence		State required commercial coverage is minimum – prefer $3,000,000 (scope of service and risk to be considered		
Shipping and Delivery Only	Statutory Employer's Liability - $1,000,000 per occurrence		State required commercial coverage is minimum – prefer $3,000,000 (scope of service and risk to be considered		
Contractors	**Statutory Employer's Liability - $1,000,000 per occurrence**	**$3,000,000 per occurrence $5,000,000 aggregate limit** **Titanium Metals Corporation listed as additional insured**	**$3,000,000 per occurrence** **Titanium Metals Corporation listed as additional insured**	**$1,000,000 per claim $2,000,000 annual aggregate** **Titanium Metals Corporation listed as additional insured**	**Property floater (to cover all Contractor equipment)**
Temporary Labor and Manpower	Statutory Employer's Liability - $1,000,000 per occurrence	Not required for clerical or professional services	$3,000,000 per occurrence Titanium Metals Corporation listed as additional insured (if required to operate vehicle for Titanium Metals Corporation or on Titanium Metals Corporation's property.		

* If contractor is a qualified self-insurer, sufficient evidence must be produced to waive requirements and proof of employer's liability insurance.
** Property floater only required if the service includes construction activities.
Titanium Metals Corporation must also be listed as "Certificate Holder".
All insurance policies shall provide a waiver of subrogation in favor of TIMET.
All subcontractors shall comply with the same insurance requirements of the general contractor (even if the work is done off-site)
Contractor(s) shall provide certificates of insurance not later than 10 days after signing the contract, if possible, but always prior to work being done under the agreement.
Contractor will provide renewal certificates as long as the contract is in force.
Large construction projects may require Builder's Risk Insurance and excess liability insurance. Contact the risk management department to discuss.
Scope of work may require environmental liability coverage. Contact the risk management department to discuss.

Scope of work may require environmental liability coverage. Contact the risk management department to discuss.

14 Safety and Health Screening Questionnaire

Please complete this form and return it to the undersigned at your earliest convenience. This information will be kept on file and **used to evaluate Contractors for our various projects**

Obtain from your insurance agent (or state fund. if applicable your workers compensation insurance experience modification rate (EMR) for the three rating periods and complete the following:

	POLICY YEAR	EMR
Most Recent Policy Year	_____	_____
1 Year Prior	_____	_____
2 Years Prior	_____	_____

If your EMR is exactly 1.0 for any policy year, is it because your firm is (or was) too small to have an EMR calculated? ____ Yes ____ No

We require verification for the above information. Any of the following methods will be acceptable:

a. **Furnish a letter from your insurance agent insurance carrier or state fund (on their letterhead) verifying the EMR data listed above.**
b. **Provide a copy of the last three years 'Experience Rating Calculation Sheets' which your insurance carrier should forward to you annually.**
c. **Provide a copy of the page of your last three years' insurance policies that show the experience modification rate and the coverage period.**

If you were required to complete OSHA *300-S* reports for the last three years please attach copies. If you were not required to complete OSHA 300-S reports, please provide the following information:

Three Previous Calendar Years	20	20	20
Number of Employees			
Number of Medical Treatment Cases*			
Number of Lost Workday Cases**			
Number of Fatalities			
Exposure Hours***			
Number of Lost Workdays****			

*** Medical Treatment Cases:** Any treatment resulting from a work accident illness that does not result in lost-time or restricted work where the contractor employee receives medical treatment administered by a physician or by registered personnel under the standing orders of a physician, Medical treatment does not include first-aid cases, even though first aid is administered by a physician or registered professional personnel, but does include loss of consciousness or Incidents that require more than one dose of prescription medicine.

**** Lost Workday Cases:** Any injury or illness that results in the employee being unable to work the next scheduled shift and any injury or illness where the employee, following medical treatment, is: Assigned to a temporary job, working at a permanent job less than full time, or working at a permanently assigned job but unable to perform all duties normally required.

***** Exposure Hours**: Actual hours worked by employees during the calendar year.

15 Drawing Reference

See Construction Drawings Titled:

Groundwater Extraction, Treatment, and Infiltration System

Titanium Metals Corporation, Henderson, Nevada Facility

Prepared for:
Titanium Metals Corporation
181 North Water Street
Henderson, Nevada 89015

Prepared by:
GEI Consultants, Inc.
3159 Voyager Drive
Green Bay, Wisconsin 54311

Dated: November 21, 2013

CONSTRUCTION DRAWINGS

Drawing C-1	Title Sheet
Drawing C-2	General Notes, Abbreviations and Legend
Drawing C-3	Existing Site Conditions
Drawing C-4	Construction Plan
Drawing C-5	Extraction System Plan and Profile (1 of 5)
Drawing C-6	Extraction System Plan and Profile (2 of 5)
Drawing C-7	Extraction System Plan and Profile (3 of 5)
Drawing C-8	Extraction System Plan and Profile (4 of 5)
Drawing C-9	Extraction System Plan and Profile (5 of 5)
Drawing C-10	Infiltration System Plan and Profile (1 of 3)
Drawing C-11	Infiltration System Plan and Profile (2 of 3)
Drawing C-12	Infiltration System Plan and Profile (3 of 3)
Drawing C-13	Cross-Sections
Drawing C-14	Lift Station and Tray Air Stripper Details
Drawing C-15	Trench and Piping Details
Drawing C-16	Trench and Piping Details
Drawing E3-001	Electrical Plan Schedules
Drawing E3-002	Electrical Plan Schedules
Drawing E4-001	Electrical Plan View
Drawing E4-002	Electrical Plan View
Drawing PFD-002	Process and Instrumentation Flow Diagram

16 Specification Reference

See Specifications Titled:

Groundwater Extraction, Treatment, and Infiltration System

Titanium Metals Corporation, Henderson, Nevada Facility

Prepared for:
Titanium Metals Corporation
181 North Water Street
Henderson, Nevada 89015

Prepared by:
GEI Consultants, Inc.
3159 Voyager Drive
Green Bay, Wisconsin 54311

Dated: November 21, 2013

17 Bid Item Breakdowns

See Appended BID SCHEDULE

Item No.	Description	Approx. Quantity	Units	Written Unit Price	Unit Price	Amount
01 General Requirements						
1.01	Mobilization	1	Lump Sum	at _____ dollars and _____ cents per LUMP SUM		
1.02	Temporary Facilities and Controls	1	Lump Sum	at _____ dollars and _____ cents per LUMP SUM		
1.03	Project Submittals	1	Lump Sum	at _____ dollars and _____ cents per LUMP SUM		
02 Site Preparation						
2.01	Protect Existing Wells and Pipelines	1	Lump Sum	at _____ dollars and _____ cents per LUMP SUM		
03 Earthwork						
3.01	Abandon Pipelines	1	Lump Sum	at _____ dollars and _____ cents per LUMP SUM		
3.02	Contaminated Soils Disposal	3,000	Ton	at _____ dollars and _____ cents per Ton		
3.03	6-inch Diameter HDPE SDR 17 Conveyance Pipe	1	Lump Sum	at _____ dollars and _____ cents per LUMP SUM		
3.04	4-inch x 8-inch Double-Wall HDPE Forcemain Pipe	1	Lump Sum	at _____ dollars and _____ cents per LUMP SUM		
3.05	6-inch Diameter HDPE SDR 17 Injection Supply Pipe	1	Lump Sum	at _____ dollars and _____ cents per LUMP SUM		

Item No.	Description	Approx. Quantity	Units	Written Unit Price	Unit Price	Amount
3.06	Valves and Pipe Connections at Injection Trenches	6	Each	at _____ dollars and _____ cents per EACH CONNECTION		
04 Site Restoration						
4.01	Final Grading and Site Restoration	1	Lump Sum	at _____ dollars and _____ cents per LUMP SUM		
4.02	Survey Documentation and As-Built Survey	1	Lump Sum	at _____ dollars and _____ cents per LUMP SUM		
4.03	Demobilization	1	Lump Sum	at _____ dollars and _____ cents per LUMP SUM		
05 Mechanical						
5.01	Groundwater Extraction Pump Installation and Connection	19	Each	at _____ dollars and _____ cents per EACH WELL		
5.02	Lift Station Installation and Connection	1	Lump Sum	at _____ dollars and _____ cents per LUMP SUM		
5.03	Air Stripper Installation and Connection	1	Lump Sum	at _____ dollars and _____ cents per LUMP SUM		
06 Electrical and Instrumentation & Controls						
6.01	Electrical Wiring and I&C at Extraction Wells	19	Each	at _____ dollars and _____ cents per EACH WELL		
6.02	Electrical Wiring and I&C at Lift Station	1	Lump Sum	at _____ dollars and _____ cents per LUMP SUM		

Item No.	Description	Approx. Quantity	Units	Written Unit Price	Unit Price	Amount
6.03	Electrical Wiring and I&C at Air Stripper	1	Lump Sum	at _____ dollars and _____cents per LUMP SUM		
6.04	Electrical and Control Wiring Raceways	1	Lump Sum	at _____ dollars and _____cents per LUMP SUM		
6.05	Install Main Control Panel	1	Lump Sum	at _____ dollars and _____cents per LUMP SUM		
6.06	Electrical Supply and Distribution	1	Lump Sum	at _____ dollars and _____cents per LUMP SUM		

Project Total :

SECTION 00440

GENERAL CONTRACTOR

General Contractor:

Address:

Telephone:

% Contract Amount:

Proposed Superintendent Name: _____

_____

References: 1) _____

_____

_____

_____

2) _____

_____

_____

_____

3) _____

_____

_____

_____

_____

(Please Append Resume)

SECTION 00441

FABRICATORS, SUPPLIERS, AND SUBCONTRACTORS

For all fabricators, suppliers, and subcontractors that will receive greater than 3% of the total contract value, please provide the business name, address, phone, contact, and contract amount. For fabricators, suppliers, and subcontractors that will receive greater than 10% of the contract value please provide 3 references from similar projects.

Name Address Phone Contact Contract Percentage	Name Address Phone Contact Contract Percentage
Name Address Phone Contact Contract Percentage	Name Address Phone Contact Contract Percentage
Name Address Phone Contact Contract Percentage	Name Address Phone Contact Contract Percentage
Name Address Phone Contact Contract Percentage	Name Address Phone Contact Contract Percentage
Name Address Phone Contact Contract Percentage	Name Address Phone Contact Contract Percentage

(Please Append References as necessary)

SECTION 00460

DESCRIPTION OF PROJECT APPROACH

The Bidder shall provide a detailed description of the proposed construction approach. Including but not limited to dust control, storm water pollution prevention, and transportation plans; sequencing of work; summary of equipment and labor; proposed work hours, schedule, and shifts; material stockpiling, handling, loading, and transportation of clearing and grubbing material, asbestos containing materials, demolition and debris, and contaminated soils; installation and removal of excavation support systems, soil backfill sourcing, hauling, stockpiling, handling, and backfilling; final site grading; and demobilization. Also, please provide a conceptual site drawing showing proposed site layout, staging, site controls, access points, traffic routes, etc.

Special attention shall be given to providing the requirements necessary for coordination with the slurry wall general contractor. Slurry wall general contractor will provide initial soil fill for access to all wells and perform final site grading. Groundwater extraction contractor shall coordinate efforts to prevent interference or delays to the slurry wall general contractor site access and construction.

Part of the installation is under high voltage transmission lines and an above-ground fiber optic communications line. Contractor shall conform to separation requirements set by utilities. The installation will encounter two active below-grade power lines and active site process piping. Special attention is to be given to work near the discharge piping. No interruption to this piping is allowed. Contractor shall prepare a Contingency Plan for work-related damage to the line and shall be ready to implement if needed.

(Please Append Written Plan)

SECTION 01010

SUMMARY OF WORK

PART 1 - GENERAL

1.01 SECTION INCLUDES

A. Work by CONTRACTOR.

B. Work by others.

1.02 WORK COVERED BY CONTRACT DOCUMENTS

A. The work to be done under this Contract Document includes, but is not necessarily limited to, furnishing all labor, tools, equipment, materials, supplies, supervision, and administration for performing the following work:

1. Mobilization – Work includes, but is not limited to the obtaining all required permits and approvals; mobilization of all personnel, equipment, and materials; completion of surveys.

2. Temporary Facilities and Controls – Work includes, but is not limited to, installation and removal of all temporary facilities; temporary utility connections, parking, sanitary facilities and establishing staging/lay down areas, equipment servicing and maintenance facilities, access roads, health and safety, compliance with Storm Water Pollution Prevention Plan and Dust Control Plan.

3. Project Submittals – Work Includes preparation of a Health and Safety Plan and all other preconstruction submittals such as the Traffic Control and Transportation Plan and Project Work Plan.

4. Protect Existing Wells and Pipelines – Work includes, but is not limited to, providing all labor, materials, layout, and equipment required to protect existing groundwater extraction and other monitoring wells on site during excavation and installation of groundwater extraction system piping. Protect pipelines to remain in place.

5. Abandon Pipelines and Culverts– Work includes but is not limited to, providing all materials, equipment, layout, labor to locate and abandon pipelines and culverts that cross, enter, or exit the excavation limits of the groundwater extraction conveyance or forcemain piping in accordance with the Specifications, Drawings, or as directed by the Owner/Engineer. It is our understanding that some, possibly all, of these pipes contains asbestos cement. The work includes, but not limited to, all excavation, cutting, cleaning, grouting, and capping of the pipes. Also included is backfilling and restoring the surface to its existing condition or as directed on the drawings. The work includes proper handling and hauling of abandoned pipes to the APEX landfill. Tipping fee at the landfill will be paid directly by OWNER.

6. Contaminated Soils Disposal – Work includes, but is not limited to, providing all labor, materials, layout, and equipment required to control dust, excavate, load,

and transport contaminated soils to an approved disposal facility in accordance with the requirements of the disposal authority and approved plans. All excess soil excavated from the site and not used as trench backfill shall be considered contaminated and properly disposed of offsite. Work includes excavation, grade documentation, stockpiling, handling, and transportation. Tipping fee at the landfill will be paid directly by OWNER.

7. 6-inch Diameter HDPE SDR 17 Conveyance Pipe – Work includes, but is not limited to, providing all labor, materials, layout, and equipment required to supply and install the 6-inch diameter HDPE SDR 17 gravity flow piping from the groundwater extraction wells to the lift station. Work includes excavation, supply, welding and installation of HDPE pipe, grade documentation, and supply, placement, and compaction of pipe bedding and backfill material. Provide dewatering and excavation support as necessary to install pipe as indicated on Drawings.

8. 4-inch x 8-inch Double-Wall HDPE Forcemain Pipe – Work includes, but is not limited to, providing all labor, materials, layout, and equipment required to supply and install the double-wall forcemain piping from the lift station to the air stripper. The piping consists of a 4-inch diameter HDPE SDR 11 pipe inside an 8-inch diameter HDPE SDR 17 pipe. Work includes excavation, supply, welding and installation of HDPE pipe, grade documentation, and supply, placement, and compaction of pipe bedding and backfill material. Provide dewatering and excavation support as necessary to install pipe as indicated on Drawings.

9. 6-inch Diameter HDPE SDR 17 Injection Supply Pipe – Work includes, but is not limited to, providing all labor, materials, layout, and equipment required to supply and install the 6-inch diameter HDPE SDR 17 gravity flow piping from the air stripper to the injection trenches. Work includes excavation, supply, welding and installation of HDPE pipe, grade documentation, and supply, placement, and compaction of pipe bedding and backfill material. Provide dewatering and excavation support as necessary to install pipe as indicated on Drawings.

10. Valves and Pipe Connections at Injection Trenches – Work includes, but is not limited to, providing all labor, materials, and equipment to install pipe, fittings, and valves to make connections from the injection supply pipe (from air stripper) to injection trench piping (installed by others) in accordance with the Specifications, Drawings, or as directed by the Owner/Engineer.

11. Groundwater Extraction Pump Installation and Connection – Work includes, but is not limited to, providing all labor, materials, and equipment for installation and mechanical connection of seventeen (19) groundwater extraction pumps in accordance with the Drawings and Specifications, or equivalent approved by the Engineer. Work includes all material and labor required to install the pumps within existing wells installed by others, and provide all fittings and valves required to connect pump discharge piping to groundwater conveyance piping installed in Item 7. Work also includes construction of the Uni-Strut rack to support the piping and electrical controls. Electrical connection and instrumentation and controls are covered under a separate Bid Item. The groundwater extraction wells will be purchased directly by the Owner.

12. Lift Station Installation and Connection – Work includes, but is not limited to, providing all labor, materials, and equipment for installation and mechanical connection of a package lift station with duplex pumps, valve vault, and flow

meter in accordance with the Specifications, Drawings, or as directed by the Owner/Engineer. Lift station shall be a package lift station with pumps capable of pumping at 50 to 100 gallons per minute as identified on Drawings, or equivalent approved by the Owner/Engineer. Electrical connection and instrumentation and controls are covered under a separate Bid Item. The lift station will be purchased directly by the Owner.

13. Air Stripper Installation and Connection – Work includes, but is not limited to, providing all labor, materials, and equipment for installation of a QED Model 16.4 EZ-Tray Air Stripper capable of treating water up to 150 gallons per minute, or equivalent approved by Engineer. Work also includes all materials, labor, and equipment required to install a concrete base and bracing to support air stripper and main control panel, and connection of the air stripper to the HDPE forcemain and discharge piping. Electrical connection and instrumentation and controls are covered under a separate Bid Item. The air stripper will be purchased directly by the Owner.

14. Electrical Wiring and I&C at Extraction Wells – Work includes providing all labor, materials, and equipment for installation of wiring, control panel, and associated instrumentation and control equipment at the nineteen extraction well locations. The Work also includes connection of the pump electrical wiring and level sensor to the control panel and for associated connections for coordination of extraction wells with the lift station. The extraction well pumps and control panels will be provided by the Owner.

15. Electrical Wiring and I&C at Lift Station - Work includes, but is not limited to, providing all labor, materials, and equipment to install wiring and control panel at the lift station. The Work also includes connection of the pump electrical wiring, level sensor, and flow meter to the control panel and for associated connections for coordination of lift station with extraction wells and air stripper. The lift station pumps and control panel will be provided by the OWNER.

16. Electrical Wiring and I&C at Air Stripper - Work includes supply and installation of wiring, control panel, and associated instrumentation and control logic at the air stripper. The Work also includes associated connections for coordination of air stripper with lift station and extraction wells.

17. Electrical and Control Wiring Raceways – Work includes, but is not limited to, providing all labor, materials, and equipment to install electrical and control raceways along runs from groundwater extraction wells to lift station (and PDP-101), from lift station to air stripper, rom air stripper (and PDP-102) to groundwater extraction wells, and from air stripper to injection trenches as provided on Drawings.

18. Electrical Supply and Distribution – Work includes, but is not limited to providing all labor, materials, and equipment to install power supply feed from the existing transformer to the main control panel location at the outfall structure as indicated on Drawings. This work also includes replacement of the existing 150 KVA padmount transformer with a 300 KVA padmount transformer (OWNER supplied), and replacement of up to eight power poles between transformer and stilling basin.

19. Install Main Control Panel – Work includes, but is not limited to, providing all labor, materials, and equipment to install the main control panel for monitoring

the operation of the groundwater extraction, treatment, and infiltration system as provided on the Specifications and Drawings. The main control panel is anticipated to be an Allen Bradley PLC. The work includes installation and connection of the main control panel to the air stripper and power feed, along with support during system commissioning. In addition, the work includes construction of a concrete pad and bracing to support the main control panel and air stripper at the location designated by the Owner near the stilling basin. The design and manufacture of the main control panel will be completed by others.

20. Final Grading and Site Restoration – Work includes, but is not limited to providing all labor, materials, layout and equipment required to remove excess soils, perform final grading, site restoration, and application of palliative dust control along work areas.

21. Survey Documentation and As-Built Drawings - Work includes, but is not limited to providing all labor, materials, survey and equipment required to complete documentation surveys of the piping and develop As-Built Drawings.

22. Demobilization – Work includes, but is not limited to providing all labor, materials, and equipment to remove temporary facilities, any materials brought to site by contractor that OWNER desires removed, and demobilize from the site.

B. The summary of work described above is an overall summary of the work to be performed and the responsibilities of the CONTRACTOR. It does not supersede the specific requirements of the other Contract Documents.

C. These specifications are in many instances written in imperative and streamlined form. This imperative language is directed to the CONTRACTOR, unless specifically noted otherwise.

1.03 WORK BY OTHERS

A. The work to be performed by OWNER or OWNER's designated representatives is as follows:

1. General observation of work for conformance to specifications.

2. Construction documentation and construction quality assurance testing including testing of soil backfill.

3. Perform Storm Water Regulatory Compliance Inspections.

4. Perform dust control inspections.

5. Perform perimeter air monitoring.

6. Installation of groundwater extraction wells.

7. Construction of slurry wall, working pad, and groundwater injection trenches.

8. Equipment supplied by OWNER:

a. Groundwater Extraction Pumps

b. Lift Station

c. Air Stripper

d. 300 KVA Padmount Transformer

e. Main Control Panel and PLC

1.04 SEQUENCE OF WORK

A. The work is to be coordinated with general site operations at the TIMET facility so as not to interfere with these activities.

B. The Work is to be coordinated with other projects on site including groundwater extraction well installation and construction of slurry wall and injection trenches.

PART 2 - PRODUCTS

A. Not Used.

PART 3 - EXECUTION

A. Not Used.

END OF SECTION

SECTION 01015

GENERAL REQUIREMENTS

PART 1 - GENERAL

1.01 SECTION INCLUDES

A. Definitions and Technical Specification Explanations.

B. Responsibilities.

C. Permits and Fees.

D. Purchase Order Releases/Changes in Work Scope.

1.02 DEFINITIONS AND TECHNICAL SPECIFICATION EXPLANATIONS

A. ADDENDUM - Written or graphic instrument issued prior to the bid due date, which clarifies, corrects or changes the bidding documents of the CONTRACT DOCUMENT.

B. PROJECT MANAGER - The authorized representative of the OWNER, named in the Specification Data Sheet, who shall perform OWNER's administrative and management responsibilities so as to complete the project to the satisfaction of the OWNER.

C. ENGINEER - The retained and authorized representative of the OWNER, named in the Specification Data Sheet or a designated alternate, who shall perform engineering support responsibilities so as to complete the project to the satisfaction of the OWNER.

D. CONSTRUCTION QUALITY ASSURANCE TECHNICIAN (CQA TECHNICIAN) - The retained and authorized representative of the OWNER, who shall perform inspection and testing responsibilities, so as to complete the project to the satisfaction of the OWNER.

E. ASBESTOS SUPERVISOR - The retained and authorized representative of the OWNER, who shall perform excavation inspection to identify asbestos containing material and provide guidance to the contractor on maintaining proper asbestos removal procedures, so as to complete the project to the satisfaction of the OWNER.

F. TIMET LIAISON - The authorized representative of the OWNER, named in the Specification Data Sheet, who shall perform coordination responsibilities related to site operations and construction interfaces, so as to complete the project to the satisfaction of the OWNER.

G. CONTRACTOR - General Contractor awarded contract to perform WORK described by CONTRACT DOCUMENT.

H. OWNER – Titanium Metals Corporation (TIMET).

I. WORK - Complete construction services including labor, materials, equipment, supervision and administration provided by the CONTRACTOR, or any portion thereof as implied by the context of the specification section in which the term is used.

J. CONTRACT DOCUMENT - Document which includes the following: Agreement, General Conditions, Supplementary Conditions, Bid, Construction Technical Specifications, DRAWINGS, and Addenda.

K. ACM - asbestos containing material

L. OTHERS - Not Used.

M. In the Technical Specifications where the word “CONTRACTOR” occurs, it shall imply contractor, subcontractor, erector, fabricator or material supplier for that particular section of the specifications.

N. In the Technical Specifications, omitted phases or words, such as “The CONTRACTOR shall”, “in conformity with”, “as noted on DRAWINGS”, “according to the plans”, “the”, “all”, are intentional and shall be supplied by inference.

O. Reference to standard specifications or MANUFACTURER’s directions shall mean the latest edition thereof at date of the Technical Specifications, unless otherwise noted.

P. Project Commencement - Defined as prior to CONTRACTOR mobilizing to site.

Q. Field Directive - Clarifications and changes to Technical Specifications and Project DRAWINGS will be made by ENGINEER or PROJECT MANAGER in a Field Directive.

R. Substantial Completion - Point in time when entire groundwater extraction, treatment, and infiltration system is complete and operable.

S. Project Completion - Point in time when all WORK is completed in accordance with Technical Specifications and proper submittals completed and verified.

1.03 RESPONSIBILITIES

A. CONTRACTOR, subcontractor or material supplier shall become familiar with all conditions relating to execution of the WORK. Neglect of this requirement will not be accepted as course for additional compensation or time.

B. CONTRACTOR shall be responsible for scheduling operations to coordinate WORK of his forces, subcontractors and suppliers so as to meet the project schedule and completion date.

C. CONTRACTOR shall obtain complete data at the site and inspect areas scheduled to receive WORK before proceeding with such WORK; shall be solely responsible for obtaining and verifying the accuracy of all measurements and layout of WORK; and shall make good, errors or defects due to faulty measurements taken, information obtained, layout or due to failure to report discrepancies.

D. CONTRACTOR shall notify ENGINEER and PROJECT MANAGER, in writing, in case of discrepancies between existing WORK and DRAWINGS or defects in such surfaces that are to receive WORK. Starting of WORK or failure to notify ENGINEER and PROJECT MANAGER of such discrepancies and/or defects shall constitute CONTRACTOR’s acceptance of same. Removal and replacement of WORK applied to defective surfaces, in order to correct defects, shall be done at expense of CONTRACTOR who applied WORK to defective surfaces.

E. PROJECT MANAGER shall be responsible for scheduling performance of WORK by OWNER or others.

F. ENGINEER shall respond in writing to any written notifications made by the CONTRACTOR regarding discrepancies between existing WORK and DRAWINGS or defects in surfaces or areas that are to receive WORK.

G. CQA TECHNICIAN shall be responsible to maintain daily contact with CONTRACTOR during progress of WORK and to facilitate communication between CONTRACTOR, PROJECT MANAGER, and ENGINEER.

H. DUST CONROL MONITOR shall work for the owner and have full authority to ensure that dust control measures are implemented, including deployment of resources and shut down of construction activities as necessary. The Dust Control Monitor shall be present at all times during which on- site construction activities have the potential to generate dust and shall devote the majority of his or her time specifically to the management of dust prevention and control. In addition, the Dust Control Monitor will conduct inspections and maintain records as required by the plan. This individual will have successfully completed the air quality classes required to maintain certification as a Dust Control Monitor.

1.04 WORK PLANS, PERMITS, AND FEES

A. Removal Action Work Plan: OWNER has approval of the Removal Action Work Plan by the Nevada Division of Environmental Protection. A copy of the permit is available for review by the CONTRACTOR at their request.

B. Dust Control Permit: CONTRACTOR shall prepare a Dust Control Plan and obtain a Dust Control Permit from the Clark County Department of Air Quality. A copy of the plan and permit shall be submitted to the ENGINEER and OWNER. The DUST CONTROL MONITOR shall ensure CONTRACTOR implementation of the dust control plan and compliance with the Dust Control Permit.

C. Storm Water Pollution Prevention Plan: CONTRACTOR shall prepare a Storm Water Pollution Prevention Plan and obtain approval from the Nevada Division of Environmental Protection. The ENGINEER shall ensure CONTRACTOR implementation and compliance with the Storm Water Pollution Prevention Plan.

D. NESHAP Asbestos Abatement Notification: CONTRACTOR shall make notification of Asbestos Abatement Work with the Clark County Department of Air Quality. A copy of the asbestos abatement wok plan and notification shall be submitted to the ENGINEER and OWNER. An ASBESTOS SUPERVISOR ensures CONTRACTOR implementation of the asbestos control plan and compliance with the Permit.

E. Traffic Control and Transportation Plan: CONTRACTOR shall prepare a Traffic Control and Transportation Plan and obtain a Traffic Control/Encroachment Permit from the Clark County Public Works Department and/or from the City of Henderson. The plan shall also detail the haul route and contingency planning for accident and spills. A copy of the plan and permit shall be submitted to the ENGINEER and OWNER.

F. Grading Permit: CONTRACTOR shall obtain a Grading Permit from the Clark County Building Department and comply with such permit requirements. A copy of the permit shall be submitted to the ENGINEER and OWNER.

PART 2 - PRODUCTS

A. Not Used.

PART 3 - EXECUTION

A. Not Used.

END OF SECTION

SECTION 01019

PHYSICAL CONDITIONS

PART 1 - GENERAL

1.01 SECTION INCLUDES

A. Explanation of information available and procedures for dealing with unforeseen physical conditions.

1.02 INFORMATION AVAILABLE

A. The location of existing underground and aboveground utilities, and structures and obstructions shown on the DRAWINGS are taken from existing information and are approximate only. Additional underground structures and obstructions may also exist. Neither the OWNER nor the ENGINEER make any warranty, expressed or implied, as to the accuracy or completeness of utilities or facilities shown on the DRAWINGS. CONTRACTOR shall determine in his own way the obstructions and difficulties to be encountered in the execution of the work under this Contract. CONTRACTOR shall take all measures necessary to protect the underground and aboveground utilities and structures that are to remain from damage during the performance of WORK. Any damage to underground and aboveground utilities that are to remain as a result of the CONTRACTOR's work shall be repaired at no cost to the OWNER or ENGINEER.

B. OWNER may have had surveys, reports, or subsurface investigations performed by ENGINEER or other consultants, the results of which are contained in the DRAWINGS or in subsurface investigation and other reports. (Available upon written request to PROJECT MANAGER.)

1.03 UNFORESEEN PHYSICAL CONDITIONS

A. Promptly notify OWNER and ENGINEER in writing of any subsurface or latent physical conditions at the site differing materially from those indicated in the Contract Document.

B. ENGINEER will promptly investigate those conditions and if ENGINEER finds that there are subsurface or latent physical conditions which differ materially from those intended in the CONTRACT DOCUMENT, and which could not reasonably have been anticipated by CONTRACTOR, and if the OWNER concurs with the ENGINEER's finding, a Change Order shall be issued incorporating the necessary revisions.

PART 2 - PRODUCTS

A. Not Used.

PART 3 - EXECUTION

A. Not Used.

END OF SECTION

SECTION 01040

PROJECT ADMINISTRATION

PART I - GENERAL

1.01 WORK INCLUDED

A. CONTRACTOR Supervision and Labor Force.

B. CONTRACTOR's Subcontract WORK.

C. Project Meetings.

D. Construction Schedule.

E. Working Hours and Coordination.

F. Reports.

1.02 RELATED SECTIONS

A. Section 01050 - Field Engineering and Surveying.

B. Section 01300 - Submittals.

C. Section 01400 - Quality Assurance, Inspection, and Testing.

1.03 CONTRACTOR SUPERVISION AND LABOR FORCE

A. The CONTRACTOR shall assign one superintendent for the project and at least one foreman during each shift, acceptable to the PROJECT MANAGER to be on site continuously during Working hours from the start to finish of the project. CONTRACTOR shall keep the PROJECT MANAGER informed of the individuals assigned to the site and the means for contacting these individuals, should the CONTRACTOR's assigned individual be off site.

B. CONTRACTOR shall use an adequate number of skilled workers who are thoroughly trained and experienced in the necessary crafts and who are completely familiar with the specified requirements and the methods needed for performance of the WORK.

C. CONTRACTOR shall use experienced professional personnel for that WORK which requires the judgment, knowledge and expertise of qualified professionals and who are familiar with all aspects of the WORK.

1.04 CONTRACTOR SUBCONTRACT WORK

A. SUBCONTRACTORS shall cooperate with the PROJECT MANAGER, ENGINEER, and CQA TECHNICIAN.

B. CONTRACTOR's Superintendent/Foreman shall maintain communication between subcontracted personnel and shall be on site when SUBCONTRACTORS are on site performing WORK.

C. CONTRACTOR shall direct SUBCONTRACTORS.

1.05 PROJECT MEETINGS

A. A pre-construction meeting will be conducted by either the PROJECT MANAGER or ENGINEER for the purpose of reviewing the WORK scope, discussing the CONTRACTOR's schedule and discussing project administration prior to the start of WORK. The CONTRACTOR shall contact the PROJECT MANAGER in writing at least five working days prior to the scheduled start of the WORK, to schedule the meeting. The meeting shall be held at the job site unless otherwise announced.

B. Weekly scheduled progress meetings will be conducted by CQA TECHNICIAN for the purpose of coordinating and expediting the WORK. The date and hour will be announced by the CQA TECHNICIAN at least 48 hours before the scheduled assembly time or on regular basis if agreed to by CONTRACTOR. The meetings shall be held at the job site unless announced otherwise.

C. Monthly scheduled project review meetings will be conducted by the PROJECT MANAGER for the purpose of monitoring the progress of the WORK. The meeting will be scheduled to coincide with the scheduled weekly progress reviews once per month. The ENGINEER will be in attendance at the monthly project review meetings.

D. It is mandatory that the CONTRACTOR be represented at each meeting by a principal member of his staff, authorized to make decisions on his behalf. From time to time, the PROJECT MANAGER may direct certain SUBCONTRACTORS to attend the meetings. Failure to attend a meeting does not relieve the CONTRACTOR from acting on the contents of the meetings.

E. The essence of the discussions of each meeting shall be entered into the minutes as a matter of record. The CQA TECHNICIAN will take the minutes of the job meetings and, on or before the next meeting, distribute copies of the minutes to all interested parties; namely:

1. The PROJECT MANAGER.

2. The ENGINEER.

3. The CONTRACTOR.

4. SUBCONTRACTORS present at the specific meeting.

F. Special meetings may be called at the discretion of the PROJECT MANAGER or the ENGINEER for the purpose of resolving problems or for the purpose of discussing specific activities concerning the WORK. Attendance at the special meetings is mandatory upon the CONTRACTOR, SUBCONTRACTORS, or other parties notified by the OWNER or the ENGINEER to attend.

1.06 CONSTRUCTION SCHEDULE

A. Submit with Bid one copy of the Overall Construction Schedule. The schedule shall be time-scaled and shall show the WORK activities, including sequences of performance and interdependency. Each activity shall be labeled and include an estimated duration in days. The Overall Construction Schedule shall comply with the required contract completion date stated in the CONTRACT DOCUMENT and any WORK restrictions, including restrictions on days or hours of WORK, stated in the Specifications. The Overall Construction Schedule shall be discussed at the pre-construction meeting.

B. On the first Working day of each month submit to the PROJECT MANAGER and ENGINEER for review one copy of the Overall Construction Schedule updated to indicate actual progress in percent completion for each activity. The updated schedule is termed the Progress Schedule. In addition to indicating actual progress, the Progress Schedule shall also indicate any changes in completion times or dates for any of the activities shown on the Schedule.

C. Each Progress Schedule shall be submitted with a written narrative describing the revisions, if any, from the previously-submitted schedule, impacts upon the WORK and corrective actions taken or proposed by the CONTRACTOR.

D. The OWNER's right to review or reject the CONTRACTOR's initial Overall Construction Schedule and subsequently-submitted Progress Schedules is for the benefit and protection of the OWNER and ENGINEER and not a benefit or service for the CONTRACTOR. Comments made by the OWNER's representatives on the Schedule, or lack of such comments, or rejection or non-rejection of the CONTRACTOR's Schedule does not relieve the CONTRACTOR from compliance with the CONTRACT DOCUMENT, nor do they create any responsibility or duty for scheduling owed from the OWNER or the ENGINEER to the CONTRACTOR. This review, whether accompanied by comments, rejection or neither, is only for general conformance with the schedule concept of the project and general compliance with the information given in the Contract Document.

1.07 WORK HOURS AND COORDINATION

A. CONTRACTOR shall perform WORK during a work schedule agreed to by the PROJECT MANAGER and TIMET Liaison at the pre-construction meeting. Starting time will be set by the PROJECT MANAGER.

B. CONTRACTOR shall keep the PROJECT MANAGER informed, at a reasonable time in advance or as required by specific sections of these Specifications, of the times and places at which he wishes to do WORK, so that any checking or oversight deemed necessary may be done with minimum inconvenience to the PROJECT MANAGER.

1.08 REPORTS

A. The CONTRACTOR shall be required, if requested by the PROJECT MANAGER or ENGINEER, to submit special reports, including but not limited to:

1. Accident Reports

2. Work Stoppage/Dispute Records

3. Systems-Operable Reports

4. CONTRACTOR's Invoices

5. Schedule of Values

6. Weekly Employee Safety Meeting Reports

PART 2 - PRODUCTS

A. Not Used.

PART 3 - EXECUTION

B. Not Used.

END OF SECTION

SECTION 01050

FIELD ENGINEERING AND SURVEYING

PART 1 - GENERAL

1.01 SECTION INCLUDES

A. CONTRACTOR Responsibilities and Submittals

B. Layout, Verification and Submittal Requirements

C. As-built Construction Documentation DRAWINGS

1.02 RELATED SECTIONS

A. Section 01300 - Submittals

1.03 GENERAL CONTRACTOR RESPONSIBILITIES AND SUBMITTALS

A. CONTRACTOR is responsible for all survey work and layout required to perform the WORK.

B. CONTRACTOR is responsible for establishing three permanent horizontal control monuments and three permanent benchmarks use by OWNER at the site. Submit proposed location to OWNER prior to establishing control monuments and benchmarks and documentation on each of the monuments after establishment.

C. The CONTRACTOR shall immediately, upon entering the site for purpose of beginning work, locate general reference points and take such action as is necessary to prevent their destruction. He shall lay out his own WORK and be responsible for all surveys, lines, elevations, and measurements of the Structures and other WORK executed by him under the Contract. He must exercise proper preparation to verify figures on the DRAWINGS before laying out WORK and will be held responsible for any error resulting from his failure to exercise such precaution.

D. CONTRACTOR shall verify grades, lines, levels, locations, and dimensions as shown on DRAWINGS and report any errors or inconsistencies to the PROJECT MANAGER and ENGINEER before commencing WORK. Starting of WORK by CONTRACTOR shall constitute acceptance of all existing conditions.

E. Any work done without being properly located may be ordered removed and replaced at the CONTRACTOR's expense.

F. CONTRACTOR is responsible for collecting as-built data, preparing and submitting as-built construction DRAWINGS as specified herein.

G. Survey work to be performed by CONTRACTOR shall be certified by a Registered Land Surveyor (RLS) or Professional ENGINEER (PE), registered in the State of Nevada.

H. CONTRACTOR and his employed Land Surveyor shall carefully preserve all monuments, bench marks, monitoring wells, extraction wells, reference points and other facilities.

CONTRACTOR will be charged with the expense of replacement of any such items destroyed, and shall be responsible for any mistakes or loss of time that may be caused. Permanent monuments or bench marks that must be removed or disturbed shall be protected until they can be properly referenced for relocation. CONTRACTOR shall furnish materials and assistance for the proper replacement of such monuments or bench marks at no cost to the OWNER.

1.04 LAYOUT, VERIFICATION AND SUBMITTAL REQUIREMENTS

A. Provide field engineering services as required herein. Utilize recognized Engineering survey practices.

B. Establish elevations, lines and levels as required. Periodically verify layouts.

C. For verification of grades, slopes and material thickness constructed by the CONTRACTOR, the CONTRACTOR's land surveyor shall obtain and document a matrix of survey points as described herein:

1. Pipe grades – Location and elevation of all pipe installed for the groundwater extraction system at a spacing of one point per every 50 feet.

2. Final site conditions - ground surface along pipe alignments, and all equipment and structures installed (i.e., manholes, vaults, concrete pads, air stripper, etc.).

D. CONTRACTOR shall submit survey data for each of the items as described above in an electronic, executable format (i.e, .xls, .csv, .txt).

1.05 AS-BUILT CONSTRUCTION DRAWINGS

A. Within 10 days or as specified below after ENGINEER's and PROJECT MANAGER's approval of a surface or layer, the CONTRACTOR's Land Surveyor shall prepare and submit as-built DRAWINGS based on the survey points obtained for the pipes and structures. The following DRAWINGS shall be submitted:

1. As-built pipe locations and elevations.

2. Final site conditions.

B. Each drawing shall contain as a minimum the following items:

1. 2-foot contour interval.

2. Title block with name of project.

3. Plan drawings at 1 inch=50 feet on 24-inch by 36-inch sheets.

4. Identification of surface features such as wells, manholes, roads, etc.

C. DRAWINGS are to be submitted in hard copy format and three-dimensional AutoCAD Version 2010 or newer contour file on CD-Rom. In addition, the point data set for each survey performed on which the DRAWINGS are based, shall be submitted in digital form (i.e., .DAT files.)

1.06 OWNER SURVEY RESPONSIBILITIES

A. If necessary, the OWNER may employ registered land surveyor licensed in the State of Nevada for verification of CONTRACTOR SURVEYS.

B. All OWNER survey data and related calculations will be available for review by the CONTRACTOR.

PART 2 - PRODUCTS

A. Not Used.

PART 3 - EXECUTION

A. The CONTRACTOR upon mobilizing to the site shall establish three permanent horizontal control monuments and three benchmarks in accordance with the Nevada Department of Transportation Location Division, Survey Standards. The monuments and benchmarks shall meet the Minimum Control and Land Survey Standards for Basic Control.

B. The CONTRACTOR upon mobilizing to the site shall perform an initial site survey for confirmation of the existing site conditions, prior to beginning site disturbance activities.

END OF SECTION

SECTION 01275

MEASUREMENT AND PAYMENT

PART 1 GENERAL

1.01 WORK INCLUDES

A. Measurement and payment criteria applicable to portions of the Work performed under a unit price payment method.

B. Measurement and payment criteria applicable to portions of the Work performed under a lump sum payment method.

1.02 SUBMITTALS

A. Administrative Submittals

1. Schedule of Values, 14 days prior to first progress payment.
2. Monthly Payment Application.
3. Final Payment Application.

1.03 UNIT QUANTITIES SPECIFIED

A. Quantities indicated in the Bid Schedule are approximate and are given only for bidding and contract purposes only. OWNER does not either expressly or by implication warrant that the actual quantities will correspond to the estimated quantities. OWNER reserves the right to increase or decrease the amount of work performed under unit price items, or to omit work altogether. No adjustments in contract unit prices will be made except as provided in the General Conditions. Quantities and measurements supplied or placed in the Work and verified by the OWNER determine payment.

1.04 MEASUREMENT OF QUANTITIES

A. Measurement Devices:

1. Weigh Scales: Inspected, tested and certified by the applicable State Weights and Measures department within the past year.
2. Platform Scales: Of sufficient size and capacity to accommodate the conveying vehicle.

B. Measurement by Weight: Concrete reinforcing steel, rolled or formed steel or other metal shapes will be measured by handbook weights. Welded assemblies will be measured by handbook or scale weight.

C. Measurement by Volume – Measured by cubic dimension using mean length, width, and height or thickness. Unless specified otherwise, volumes shall be computed using the average-end-area method with cross sections surveyed at maximum 100-foot spacing. On curved alignments, volume computations shall utilize the length between the centroid of each area at adjacent cross sections rather than the nominal cross section spacing along the alignment.

1. Measurement will be made from the limit of the neat lines shown on the Drawings or to the approved limits of excavation.

D. Measurement by Area – Measured by square dimensions using mean length and depth, width, or radius as applicable.

E. Linear Measurements:

1. Measured by linear dimension at the item centerline or mean chord.

2. Based on a horizontal projection of the actual length except where specified as a vertical measurement.

F. Perform surveys, field measurement and calculations to measure installed quantities for all Unit Price pay items in conformance with the attached Listing of Pay Items.

G. Notify OWNER in advance, and obtain OWNER witness of daily field measurement for work performed under Unit Price Pay Items.

H. Include backup data and calculations with application for payment.

I. Measurement by the Contractor is subject to review, verification, and approval by the OWNER.

J. Round to the nearest whole unit for pay quantities.

1.05 PAY ITEMS

A. Payment For Unit Price Items

1. Unit Price Work:

a. Reflect unit price quantity and price breakdown from the Schedule of Contract Items and Prices in the Bid Proposal.

b. Estimated quantities shown on the Bid Proposal are approximate and are given only for a comparison of bids. OWNER does not either expressly or by implication warrant that the actual quantities will correspond to the estimated quantities. OWNER reserves the right to increase or decrease the amount of work performed under unit price items, or to omit work altogether. No adjustments in contract unit prices will be made except as provided in the General Conditions.

2. Final payment for Work governed by unit prices will be made based on the actual measurements and quantities accepted by the OWNER, multiplied by the unit price for Work that is incorporated in or made necessary by the Work.

B. Payment For Lump Sum Items

1. Payment for lump sum Work shall be made in accordance with the accepted schedule of values.

2. An unbalanced or front-end loaded schedule will not be acceptable.

3. Payment for lump sum Work covers all Work required to complete the work as shown or specified that is not covered under the unit price items, and shall be based on the breakdown included in the approved Schedule of Values.

4. Summation of the complete Schedule of Values shall equal the Contract Price for the lump sum item.

C. Base Bid Pay Item Breakdown

ITEM NO.	ITEM	UNIT	DESCRIPTION	MEASUREMENT AND PAYMENT TERMS
01 General Requirements				
1.01	Mobilization	Lump Sum	Work includes, but is not limited to the obtaining all required permits and approvals; mobilization of all personnel, equipment, and materials; completion of surveys.	Payments will be made in two, 50% payments made in each of the first two contractor invoices.
1.02	Temporary Facilities and Controls	Lump Sum	Work includes, but is not limited to installation and removal of all temporary facilities; temporary utility connections, parking, sanitary facilities and establishing staging/lay down areas, equipment servicing and maintenance facilities, access roads, safety items, compliance with Stormwater Pollution Prevention Plan and Dust Control Plan.	Payment based on 100% completion of the work, or a mutually agreed percentage for progress payment.
1.03	Project Submittals	Lump Sum	Work Includes preparation of Dust Control Plan, Stormwater Pollution Prevention Plan, Health and Safety Plan and all other preconstruction submittals	Payment based on 100% completion of the work, or a mutually agreed percentage for progress payment.
02 Site Preparation				
2.01	Protect Existing Wells and Pipelines	Lump Sum	Work includes, but is not limited to providing all labor, materials, layout, and equipment required to protect existing wells and pipelines not designated for abandonment during the Work.	Payment based on 100% completion of the work.

ITEM NO.	ITEM	UNIT	DESCRIPTION	MEASUREMENT AND PAYMENT TERMS
03 Earthwork				
3.01	Abandon Pipelines	Lump Sum	Work includes but is not limited to, providing all materials, equipment, layout, labor to locate and abandon buried pipelines that cross, enter, or exit the groundwater extraction piping trenching limits in accordance with the Specifications, Drawings, or as directed by the OWNER/ENGINEER. The work includes, but not limited to, all excavation, cutting, cleaning, removal, grouting, and capping of the pipes. This scope also includes proper handling and hauling of abandoned pipes to the APEX landfill. Tipping fee at the landfill will be paid directly by OWNER.	Payment based on 100% completion of the work.
3.02	Contaminated Soils Disposal	Ton	Work includes, but is not limited to providing all labor, materials, layout, and equipment required to control dust, excavate, load, and transport contaminated soils to an approved disposal facility in accordance with the requirements of the disposal authority and approved plans. All excess soil excavated from the site and not used as trench backfill shall be considered contaminated and properly disposed of offsite. Work includes excavation, grade documentation, stockpiling, handling, and transportation. Tipping fee at the landfill will be paid directly by OWNER.	Ton as measured by actual weight slips from certified weight scale. Payment based on 100% completion of the work, or a mutually agreed percentage for progress payment.

ITEM NO.	ITEM	UNIT	DESCRIPTION	MEASUREMENT AND PAYMENT TERMS
3.03	6-inch Diameter HDPE SDR 17 Conveyance Pipe	Lump Sum	Work includes, but is not limited to providing all labor, materials, layout, and equipment required to supply and install the 6-inch diameter HDPE SDR 17 gravity flow piping from the groundwater extraction wells to the lift station. Work includes excavation, supply, welding and installation of HDPE pipe, grade documentation, and supply, placement, and compaction of pipe bedding and backfill material. Provide dewatering and excavation support as necessary to install pipe as indicated on Drawings.	Payment based on 100% completion of the work, or a mutually agreed percentage for progress payment.
3.04	4-inch x 8-inch HDPE Forcemain Pipe	Lump Sum	Work includes, but is not limited to, providing all labor, materials, layout, and equipment required to supply and install the double-wall forcemain piping from the lift station to the air stripper. The piping consists of a 4-inch diameter HDPE SDR 11 pipe inside an 8-inch diameter HDPE SDR 17 pipe. Work includes excavation, supply, welding and installation of HDPE pipe, grade documentation, and supply, placement, and compaction of pipe bedding and backfill material. Provide dewatering and excavation support as necessary to install pipe as indicated on Drawings.	Payment based on 100% completion of the work, or a mutually agreed percentage for progress payment.
3.05	6-inch Diameter HDPE SDR 17 Injection Supply Pipe	Lump Sum	Work includes, but is not limited to providing all labor, materials, layout, and equipment required to supply and install the 6-inch diameter HDPE SDR 17 gravity flow piping from the air stripper to the injection trenches. Work includes excavation, supply, welding and installation of HDPE pipe, grade documentation, and supply, placement, and compaction of pipe bedding and backfill material. Provide dewatering and excavation support as necessary to install pipe as indicated on Drawings.	Payment based on 100% completion of the work, or a mutually agreed percentage for progress payment.

ITEM NO.	ITEM	UNIT	DESCRIPTION	MEASUREMENT AND PAYMENT TERMS
3.06	Valves and Pipe Connections at Injection Trenches	Each	Work includes, but is not limited to providing all labor, materials, and equipment to install pipe, fittings, and valves to make connections from groundwater conveyance pipe (from air stripper) to injection trench piping (installed by others) in accordance with the Specifications, Drawings, or as directed by the OWNER/ENGINEER.	Payment based on 100% completion of the work.
04 Site Restoration				
4.01	Final Grading and Site Restoration	Lump Sum	Work includes, but is not limited to providing all labor, materials, layout and equipment required to perform final grading, site restoration, and application of palliative dust control.	Payment based on 100% completion and acceptance of the work.
4.02	Survey Documentation and As-Built Survey	Lump Sum	Work includes, but is not limited to providing all labor, materials, survey and equipment required to complete Documentation Surveys of the Excavation, Backfill, and developing As-Built drawings.	Payment based on 100% completion and acceptance of the work.
4.03	Demobilization	Lump Sum	Work includes, but is not limited to providing all labor, materials, and equipment to remove temporary facilities, any materials brought to site by contractor that OWNER desires removed, and demobilize from the site.	Payment based on 100% completion and acceptance of the work.

ITEM NO.	ITEM	UNIT	DESCRIPTION	MEASUREMENT AND PAYMENT TERMS
05 Mechanical				
5.01	Groundwater Extraction Pump Installation and Connection	Each	Work includes, but is not limited to, providing all labor, materials, and equipment for installation and mechanical connection of nineteen (19) groundwater extraction pumps in accordance with the Drawings and Specifications, or equivalent approved by the ENGINEER. Work includes all material and labor required to install the pumps within existing wells installed by others, and provide all fittings and valves required to connect pump discharge piping to groundwater conveyance piping installed in Item 3.03. Work also includes construction of the Uni-Strut rack to support the piping and electrical controls. The groundwater extraction wells will be purchased directly by the OWNER. Work does not included electrical connection and instrumentation and controls covered under Bid Item 6.01.	Payment based on 100% completion and acceptance of the work.
5.02	Lift Station Installation and Connection	Lump Sum	Work includes, but is not limited to providing all labor, materials, and equipment to install a package lift station with duplex pumps, valve vault, and flow meter in accordance with the Specifications, Drawings, or as directed by the OWNER/ENGINEER. Lift station will be a package lift station with pumps capable of pumping at 50 to 100 gallons per minute as identified on Drawings, or equivalent approved by the OWNER/ENGINEER. The lift station will be purchased directly by the OWNER. Work does not included electrical connection and instrumentation and controls covered under Bid Item 6.02.	Payment based on 100% completion and acceptance of the work.

ITEM NO.	ITEM	UNIT	DESCRIPTION	MEASUREMENT AND PAYMENT TERMS
5.03	Air Stripper Installation and Connection	Lump Sum	Work includes, but is not limited to, providing all labor, materials, and equipment to install a QED Model 16.4 EZ-Tray Air Stripper capable of treating water up to 150 gallons per minute, or equivalent approved by ENGINEER. Work also includes all materials, labor, and equipment required to install a concrete base and bracing to support air stripper and main control panel, and connection of the air stripper to the HDPE forcemain and discharge piping. The air stripper will be purchased directly by the OWNER. Work does not included electrical connection and instrumentation and controls covered under Bid Item 6.03.	Payment based on 100% completion and acceptance of the work.
06 Electrical and Instrumentation & Controls				
6.01	Electrical Wiring and I&C at Extraction Wells	Lump Sum	Work includes, but is not limited to, providing all labor, materials, and equipment for installation of wiring, control panel, and associated instrumentation and control equipment at the nineteen (19) extraction well locations. The Work also includes connection of the pump electrical wiring and level sensor to the control panel and for associated connections for coordination of extraction wells with the lift station. The extraction well pumps and control panels will be provided by the OWNER.	Payment based on 100% completion and acceptance of the work.
6.02	Electrical Wiring and I&C at Lift Station	Lump Sum	Work includes, but is not limited to, providing all labor, materials, and equipment to install wiring and control panel at the lift station. The Work also includes connection of the pump electrical wiring, level sensor, and flow meter to the control panel and for associated connections for coordination of lift station with extraction wells and air stripper. The lift station pumps and control panel will be provided by the OWNER.	Payment based on 100% completion and acceptance of the work.

ITEM NO.	ITEM	UNIT	DESCRIPTION	MEASUREMENT AND PAYMENT TERMS
6.03	Electrical Wiring and I&C at Air Stripper	Lump Sum	Work includes, but is not limited to, providing all labor, materials, and equipment to install wiring and I&C at the air stripper. The Work also includes associated connections for coordination of air stripper with lift station and extraction wells. The air stripper and air stripper control panel will be provided by the OWNER.	Payment based on 100% completion and acceptance of the work.
6.04	Electrical and Control Raceways	Lump Sum	Work includes, but is not limited to providing all labor, materials, and equipment to install electrical and control raceways along runs from groundwater extraction wells to lift station (and PDP-101), from lift station to air stripper, from air stripper (and PDP-102) to groundwater extraction wells, and from air stripper to injection trenches as provided on Drawings.	Payment based on 100% completion and acceptance of the work.
6.05	Install Main Control Panel	Lump Sum	Work includes, but is not limited to, providing all labor, materials, and equipment to install the main control panel for monitoring the operation of the groundwater extraction, treatment, and infiltration system as provided on the Specifications and Drawings. The main control panel is anticipated to be an Allen Bradley PLC. The work includes installation and connection of the main control panel to the air stripper and power feed, along with support during system commissioning. The design and manufacture of the main control panel will be completed by others.	Payment based on 100% completion and acceptance of the work.
6.06	Electrical Supply and Distribution	Lump Sum	Work includes, but is not limited to providing all labor, materials, and equipment to install power supply feed from the existing transformer to the main control panel location at the outfall structure as indicated on Drawings. This work also includes replacement of the existing 150 KVA padmount transformer with a 300 KVA padmount transformer (OWNER supplied), and replacement of up to eight power poles between transformer and stilling basin.	Payment based on 100% completion and acceptance of the work.

1.06 SCHEDULE OF VALUES

A. Provide breakdown of lump sum pay items to facilitate review of progress payments. Breakdown by work items as requested by OWNER/ENGINEER.

B. Submit on CONTRACTOR's standard form.

1.07 PROGRESS PAYMENTS

A. Submit progress payments monthly, in accordance with requirements of the Special Conditions.

B. Include accepted schedule of values for each portion of Work and the unit price breakdown for Work to be paid on unit price basis, and allowances.

C. Preparation:

1. Round values to the nearest dollar.
2. List each Change Order and Written Amendment executed prior to date of payment request as separate line items.

1.08 NONPAYMENT FOR REJECTED OR UNUSED

A. Payment will not be made for the following:

1. Materials excavated and/or placed beyond the Design Lines shown on the Drawings, except as specifically required by the ENGINEER.
2. Loading, hauling, and disposing of rejected material.
3. Quantities of material wasted or disposed of in a manner not called for under Contract Documents.
4. Rejected loads of material, including material rejected after it has been placed by reason of failure of CONTRACTOR to conform to provisions of Contract Documents.
5. Material not unloaded from transporting vehicle.
6. Defective work not accepted by OWNER.
7. Material remaining on hand after completion of Work.

PART 2 PRODUCTS

Not Used.

PART 3 EXECUTION

Not Used.

END OF SECTION

SECTION 01300

SUBMITTALS

PART 1 GENERAL

1.01 SECTION INCLUDES

A. General.

B. Submittal schedule.

C. Submittal procedures.

D. Construction progress schedules.

E. Proposed products list.

F. Shop drawings.

G. Product data.

H. Samples.

1.02 RELATED SECTIONS

A. Section 01700 - Contract Closeout

1.03 GENERAL

A. Submittals: On copies of attached Submittal Form.

B. The Engineer will review all submittals solely for the purpose of determining whether the information contained in the submittal conforms to the design concept of the contract documents. The Engineer will return the submittals with the following classifications:

1. Work May Proceed. Reviewed for general consistency with contract documents, no corrections, or marks.

2N. Work May Proceed Subject to the Changes Indicated. Re-submittal not required: Minor corrections. Proceed with Work subject to comments and revisions; no re-submittal is required.

2R. Work May Not Proceed Indicated Part(s). Re-submittal Required. Work may proceed on other items: Minor corrections. Proceed with work subject to comments and revisions; a re-submittal is required.

3. Work May Not Proceed. Revise and Resubmit. All major corrections or not in conformance with contract documents, correct and resubmit.

4. For Information Only. Items not reviewed or items for which no submittal is required.

C. Engineer's review of submittals for conformance with contract documents does not relieve the Contractor from responsibility with regard to fulfillment of the terms of the Contract and proper and complete performance of the Work in accordance with the requirements of the Drawings, Specification, applicable permits, as well as the general requirements of the Contract Documents.

D. Engineer's review of submittals does not relieve the Contractor from responsibility for errors or omissions in its designs, details, calculations, analyses, test methods, materials, and its sole responsibility for Means and Methods of Construction, and safe and successful construction of the Work.

1.04 SUBMITTAL SCHEDULE

A. See Table 01300-1 - List of Submittals attached at the end of this Section. Submittals are required on the items as described individually in each Section of the Technical Specification. The description of the submittal data is defined in the Technical Specification. The summary of the required submittals contained in Table 01300-1 may not include all required submittals. Provide all submittals required by the Specification even if not listed in Table 01300-1.

1.05 SUBMITTAL PROCEDURES

A. Sequentially number the transmittal form. Revise submittals with original number and a sequential alphabetic suffix. Start sequential numbering with the related Specification number. For example submittal numbered 01111-11-B is the second revision (B) of the eleventh submittal (11) for Section 01111.

B. Identify Project, Contractor, Subcontractor, or supplier; pertinent drawing and detail numbers, and specification section number, as appropriate.

C. Apply Contractor's stamp, signed or initialed, certifying that review, verification of Products required, field dimensions, adjacent construction Work, and coordination of information, are in accordance with the requirements of the Work and Contract Documents.

D. Schedule submittals to expedite the Project, and deliver to Construction Manager, Groundwater Extraction System, Titanium Metals Corporation, Henderson, Nevada. Coordinate submission of related items. Provide five copies to the Engineer of each submittal unless specified otherwise. The Engineer will provide the Owner with one copy of each approved submittal.

E. For each submittal, allow a minimum of 15 workdays, excluding delivery time to and from the Contractor, unless specified otherwise.

F. Identify variations from Contract Documents and Product or system limitations that may be detrimental to successful performance of the completed Work.

G. Provide space for Contractor and Engineer review stamps.

H. Revise, update, and resubmit, identifying all changes made since previous submission. For each re-submittal (in response to Codes 2R or 3), allow the same number of workdays required for the original submittal.

I. The Engineer shall distribute copies of reviewed submittals as appropriate. Instruct parties to promptly report any inability to comply with provisions.

J. Submittals not requested will not be recognized or processed.

1.06 CONSTRUCTION PROGRESS SCHEDULES

A. Submit initial schedule in duplicate as set forth in Schedule I of the Agreement.

B. Revise and resubmit as required.

C. Indicate submittal dates required for shop drawings, Product data, samples, and Product delivery dates including those furnished by Owner and required by Allowances.

1.07 PROPOSED PRODUCTS LIST

A. Within 15 calendar days after date of Notice to Proceed, submit list of major Products proposed for use, with the name of manufacturer, trade name, and model number of each Product.

B. For Products specified only by reference standards, submit Manufacturer trade name, model, or catalog designation, and reference standards.

1.08 SHOP DRAWINGS

A. Submit the number of opaque reproductions that Contractor requires, and required copies, which will be retained by the Owner and Engineer respectively.

B. Shop Drawings: Submit for review. After review, produce copies, and distribute in accordance with the SUBMITTAL PROCEDURES article above and for record documents purposes described in Section 01700.

1.09 PRODUCT DATA

A. Submit the number of copies that the Contractor requires, and copies required by the Engineer and Owner.

B. Mark each copy to identify applicable Products, models, options, and other data. Supplement manufacturers' standard data to provide information unique to this Project.

C. After review, distribute in accordance with the Submittal Procedures article above and provide copies for record documents described in Section 01700.

1.10 SAMPLES

A. Submit samples to illustrate functional and aesthetic characteristics of the Product with integral parts and attachment devices. Coordinate sample submittals for interfacing Work.

B. Include identification on each sample with full Project information.

C. Submit the number of samples specified in individual specification sections, one of which will be retained by Engineer.

D. Reviewed samples that may be used in the Work are indicated in individual specification sections.

TABLE 01300-1 - LIST OF SUBMITTALS

Item	Reference Section	Submittals Required	Due Date or Delivery Time
General Requirements	01015	Dust Control Plan	
		Storm Water Pollution Prevention Plan	
		Transportation Plan	
Project Administration	01040	Overall Construction Schedule	With the bid.
	01040	Progress Schedule	First working day of each month
Field Engineering and Surveying	01050	Horizontal Control and Benchmarks	Within 10 days or as specified by the Engineer
		As-Built Pipe and System Locations	Within 10 days or as specified by the Engineer
Site Health and Safety	01900	Site Safety and Health Plan	Prior to start of site activities
	01900	Material Safety Data Sheets	Prior to start of site activity
	01900	OSHA 29 CFR 1910.120 Certification	Prior to start of site activity
	01900	First Aid and CPR Certification	Prior to start of site activity
Material Management	02080	Excavated Materials Management Plan	10 work days prior to excavation.
	02080	Daily tracking information	Daily
	02080	Records of water disposal	Daily
	02080	Off-site transportation records, including receiving facilities weight slips	Daily
Earthwork	02200	75-lb. sample of granular fill proposed from off-site sources	Three weeks prior to use
	02200	Analytical test results for off-site fill	Two weeks prior to use
Abandonment of Existing Pipes	02521	Pipe Abandonment Plan	15 work days prior to commencement of work
Operations and Maintenance Manuals	017823	O&M Manual for all equipment installed as part of project	30 days prior to demonstration and training

PART 2 - PRODUCTS

A. Not Used.

PART 3 - EXECUTION

A. Not Used.

END OF SECTION

SECTION 01400

QUALITY ASSURANCE AND QUALITY CONTROL

PART 1 - GENERAL

1.01 SECTION INCLUDES

A. OWNER's Construction Quality Assurance (CQA) Plan Related to Inspection and Testing

B. CONTRACTOR's Responsibilities

C. ENGINEER's Responsibilities

D. CONSTRUCTION INSPECTOR'S Responsibilities

E. CQA TECHNICIAN

1.02 OWNER'S CONSTRUCTION QUALITY ASSURANCE

A. OWNER shall arrange for construction oversight in the form of inspection and testing activities, to confirm that the construction activities and the completed project comply with the approved Plans Technical Specifications and contract Drawings

B. OWNER shall retain the services of an Engineer to provide construction observation and CQA services

C. OWNER's inspection and testing activities shall consist of the following activities:

1. Daily observation and recording of contractor activities by the CQA TECHNICIAN.

2. Documenting and observing material excavation, dust control, stockpiling, loading, hauling, and disposal activities.

3. Obtaining of material samples for laboratory testing.

4. On-site visual material inspection and testing by the CQA TECHNICIAN.

1.04 CONTRACTOR'S RESPONSIBILITIES

A. The CONTRACTOR is ultimately responsible for the WORK to be performed in strict accordance with the Technical Specifications and DRAWINGS, using the necessary construction procedures and techniques. The CONTRACTOR is also responsible for coordinating, supervising and overseeing subcontractors as needed and employed by the CONTRACTOR to perform construction related activities.

B. The CONTRACTOR shall perform testing he deems necessary to satisfy requirements of the Technical Specifications related to off-site materials prior to delivery of said materials to the site. Materials that do not meet the requirements shall be removed from the site at the expense of the CONTRACTOR.

C. The CONTRACTOR shall cooperate with the PROJECT MANAGER, ENGINEER, and the CQA TECHNICIAN in furnishing material samples, and in providing assistance in their performance of the on-site inspection and testing activities.

D. The CONTRACTOR shall assure that all submittals required by the CONTRACT DOCUMENT for the CONTRACTOR or his subcontractors are completed within the times specified. Failure to do so will result in withholding of payment.

E. The CONTRACTOR shall perform or arrange for all survey and layout work to be performed, and for documentation to be obtained in accordance with the applicable section of these Technical Specification.

1.05 ENGINEER'S RESPONSIBILITIES

A. ENGINEER is responsible for making any necessary design changes, approving CONTRACTOR's submittals, reviewing the CQA TECHNICIAN's written reports, reviewing material test reports, and preparing the Construction Documentation Report and DRAWINGS.

B. The ENGINEER is responsible for assisting the PROJECT MANAGER in modifying construction site activities and specifying specific corrective measures in cases where there is deviation from the specified design or failure to meet design criteria of Technical Specifications and DRAWINGS. In cases where design changes require approval of regulatory agency, ENGINEER will assist PROJECT MANAGER in obtaining said approval.

1.06 PROJECT MANAGER'S RESPONSIBILITIES

A. The PROJECT MANAGER is responsible for confirming construction compliance with the Technical Specifications and Project DRAWINGS by performing observations, inspections, verifications, and documentation activities.

1.07 CQA TECHNICIAN

A. The CQA TECHNICIAN is responsible for observing and performing testing during the construction activities. The CQA TECHNICIAN will assist the PROJECT MANAGER and ENGINEER in their responsibilities.

PART 2 - PRODUCTS

A. Not Used.

PART 3 - EXECUTION

A. Not Used.

END OF SECTION

SECTION 01500

SITE REQUIREMENTS, CONSTRUCTION FACILITIES, AND TEMPORARY CONTROLS

PART 1 - GENERAL

1.01 SECTION INCLUDES

A. General Site Requirements including use of site facilities, protection of personnel and equipment.

B. Site Specific Requirements including security, access roads, parking, fire protection and emergencies, archaeological or historic relics.

C. Construction Facilities including field offices and structures, laydown and equipment storage locations, temporary utilities, sanitary facilities.

D. Temporary Controls including dust, water and erosion controls, barriers, enclosures, fencing, protection of the WORK, cleaning.

1.02 RELATED SECTIONS

A. Not Used.

1.03 USE OF SITE FACILITIES

A. CONTRACTOR shall assume that all existing facilities are and will remain in service during the performance of the WORK, unless specifically identified in the CONTRACT DOCUMENT or as coordinated by the PROJECT MANAGER or TIMET LIAISON.

B. CONTRACTOR shall avoid traffic conflict with operations and vehicles of the OWNER's or the OWNER's agents at the site, by limiting access to the routes as directed by the TIMET LIAISON or PROJECT MANAGER.

1.04 SECURITY

A. Admittance of CONTRACTOR's employees and equipment to be coordinated with TIMET LIAISON at least five working days prior to the date when work is to begin.

B. Security is not provided by the OWNER for CONTRACTOR's property.

C. TIMET maintains a comprehensive security program to provide protection for OWNER, personnel and property, to prevent risk to public health and safety, and to assure reliable service to its customers. All security procedures apply to the CONTRACTOR and their employees who perform work at TIMET facilities and sites and are intended to support the stated objectives of the TIMET security program.

1.05 ACCESS ROADS AND PARKING

A. CONTRACTOR shall construct and maintain temporary roads necessary to perform the work within the construction area or as shown on the DRAWINGS or as directed by the TIMET LIAISON.

B. Existing on-site roads used within designated construction limits for construction traffic, as approved by the TIMET LIAISON, shall be restored to their original condition upon completion of the construction activities.

C. Existing on-site roads outside of construction limits which share construction and operations traffic shall be restored by OWNER at completion of the work.

D. Parking areas at the site shall be designated by the TIMET LIAISON.

1.06 FIRE PROTECTION AND EMERGENCIES

A. CONTRACTOR shall furnish and maintain a suitable type and amount of portable fire extinguishers or carts.

B. CONTRACTOR shall abide by the OWNER's emergency notification and operating practices for emergency situations. These practices will be discussed at the pre-construction meeting.

1.07 FIELD OFFICES AND STRUCTURES

A. CONTRACTOR shall provide a temporary field office sufficient to conduct construction meetings with a minimum of eight people.

B. CONTRACTOR shall provide necessary temporary sheds or other storage facilities to accommodate CONTRACTOR's supply and storage needs.

C. TIMET LIAISON shall direct the location for CONTRACTOR's placement of field offices and structures.

1.08 TELEPHONE SERVICE

A. CONTRACTOR shall provide, maintain and pay for telephone service to the site from project start to completion. Possession by the CONTRACTOR's designated on-site superintendent or foreman of a cellular phone is acceptable to meet this requirement.

1.09 TEMPORARY UTILITIES

A. ELECTRICITY

1. CONTRACTOR shall arrange for temporary electrical service as needed.

B. WATER

1. CONTRACTOR shall furnish drinking water as required.

2. Non-potable water required for the WORK, will be available free of charge at presently available outlets and pressures as shown on the drawings.

1.10 SANITARY FACILITIES

A. Provide temporary sanitary toilet facilities conforming to state and local health and sanitation regulations in sufficient number for use by CONTRACTOR's and SUBCONTRACTOR's employees.

B. Maintain in sanitary conditions and properly supply with toilet paper.

1.11 LAYDOWN AND EQUIPMENT STORAGE LOCATIONS

A. CONTRACTOR shall park equipment and store materials only in those areas designated on the DRAWINGS, specified in the CONTRACT DOCUMENT, or as directed by the TIMET LIAISON.

B. Areas disturbed by the CONTRACTOR shall be restored to their original condition upon project completion.

1.12 DUST AND MUD CONTROLS

A. CONTRACTOR shall conduct operations and maintain the site to minimize the creation and dispersion of dust and mud.

B. CONTRACTOR shall provide on-site, the equipment necessary to control dust generation resulting from wind effects on open stockpiles and excavations, and from CONTRACTOR's vehicle and equipment traffic while both on and accessing the site. The means to control such dust is by the application of water to affected areas, such that the surfaces are moistened to prevent dust from becoming a nuisance to the public, neighbors and concurrent performance of other WORK at the site.

C. Dust control watering shall be conducted by the CONTRACTOR seven (7) days a week until completion of construction activities.

D. CONTRACTOR shall control mud and tracking of mud both on and off the site by providing stone and grade and fill areas to prevent tracking.

E. TIMET LIAISON shall monitor site conditions related to dust and mud generation on a daily basis and direct the CONTRACTOR to take actions as necessary to address observed deficient practices or conditions.

1.13 WATER AND EROSION CONTROLS

A. CONTRACTOR shall grade the site to drain in accordance with the final grading plans shown on the DRAWINGS.

B. CONTRACTOR shall provide, maintain and erosion control to prevent water from leaving property.

1.14 BARRIERS AND PROTECTION OF INSTALLED WORK

A. CONTRACTOR shall protect installed WORK and provide special protection where specifically in the Technical Specifications.

B. CONTRACTOR shall provide barriers to prevent unauthorized entry to construction and staging areas as necessary and shall protect existing facilities and adjacent properties from damage from construction operations.

1.15 PROGRESS CLEANING

A. CONTRACTOR shall maintain areas free of waste materials, debris and rubbish. The site shall be maintained in a clean and orderly condition.

B. CONTRACTOR shall remove waste materials, debris and rubbish from the site weekly and dispose off-site.

PART 2 - PRODUCTS

A. Not Used.

PART 3 - EXECUTION

A. Not Used.

END OF SECTION

SECTION 01560

PROTECTION OF ENVIRONMENT

PART 1 - GENERAL

1.01 SUMMARY

A. CONTRACTOR, in executing Work, shall maintain WORK areas on- and off-site free from environmental pollution that would be in violation of federal, state, or local regulations.

1.02 PROTECTION OF STORM SEWERS

A. Prevent construction material, pavement, concrete, earth, or other debris from entering existing storm sewer or sewer structures.

1.03 PROTECTION OF WATERWAYS

A. Storm Water Pollution Prevention Plan: CONTRACTOR shall prepare a Storm Water Pollution Prevention Plan and obtain approval from the Nevada Division of Environmental Protection. The ENGINEER shall ensure CONTRACTOR implementation and compliance with the Storm Water Pollution Prevention Plan.

B. Observe rules and regulations of State of Nevada and agencies of US government prohibiting pollution of lakes, streams, rivers, or wetlands by dumping of refuse, rubbish, dredge material, or debris.

C Comply with procedures outlined in US EPA manuals entitled, “Guidelines for Erosion and Sedimentation Control Planning and Implementation,” Manual EPA-72-015 and “Processes, Procedures, and Methods to Control Pollution Resulting from All Construction Activity,” Manual EPA 43019-73-007.

1.04 PROTECTION OF AIR QUALITY AND DUST CONTROL

A. Dust Control Permit: CONTRACTOR shall prepare a Dust Control Plan and obtain a Dust Control Permit from the Clark County Department of Air Quality. A copy of the plan and permit shall be submitted to the ENGINEER and OWNER. The DUST CONTROL MONITOR shall ensure CONTRACTOR implementation of the dust control plan and compliance with the Dust Control Permit.

B. Minimize air pollution by requiring use of properly operating combustion emission control devices on construction vehicles and equipment and encourage shutdown of motorized equipment not in use.

C. Do not burn trash on construction site.

D. Dust control is the responsibility of the CONTRACTOR.

1.05 USE OF CHEMICALS

A. Submit MSDS for all chemicals prior to bringing it on site.

B. Chemicals used during project construction or furnished for project operation, whether herbicide, pesticide, disinfectant, polymer, reactant, or of other classification, shall be approved by US EPA or US Department of Agriculture or any other applicable regulatory agency.

C. Use and disposal of chemicals and residues shall comply with manufacturer's instructions.

1.06 NOISE CONTROL

A. Conduct operations to cause least annoyance to residents in vicinity of WORK, and comply with applicable local ordinances.

B. Equip compressors, hoists, and other apparatus with mechanical devices necessary to minimize noise and dust. Equip compressors with silencers on intake lines.

C. Equip gasoline or oil-operated equipment with silencers or mufflers on intake and exhaust lines.

D. Conduct hauling operations so as equipment causes a minimum of noise and dust.

1.07 FUELS AND LUBRICANTS

A. CONTRACTOR to comply with all local, state, and federal regulations concerning the transportation and storage of fuels and lubricants.

B. A fuel storage and equipment refueling area shall be designated by OWNER. The CONTRACTOR shall be and remain liable for compliance by its employees, agents, and subcontractors that all refueling take place in the designated area. Containment requirements shall be submitted by CONTRACTOR for approval in writing by OWNER.

C. All spills or leakage shall be reported to OWNER and CONTRACTOR shall be responsible for cleanup and proper disposal, as required.

D. OWNER reserves the right to order damaged or leaking equipment off-site.

PART 2 - PRODUCTS

A. Not used.

PART 3 - EXECUTION

A. Not used.

END OF SECTION

SECTION 01900

SITE HEALTH AND SAFETY

PART 1 - GENERAL

1.01 SECTION INCLUDES

A. Disclosure - Chemical Characteristics.

B. Health and Safety Plan.

C. Public Safety.

D. Excavations.

1.02 REFERENCES

A. Code of Federal Regulations

1. 29 CFR 1910 Occupational Safety and Health Standards.

2. 29 CFR 1926 Safety and Health Regulations for Construction.

3. 40 CFR Parts 61 and 63National Emissions Standards for Hazardous Air Pollutants (NESHAPs).

1.03 SUBMITTALS

A. Quality Control Submittals

1. General
   a. Submit prior to the start of site activities.

2. Health and Safety Submittals
   a. Submit Site Safety and Health Plan, not for approval, but as evidence of compliance with State and Federal requirements.
   b. Submit material safety data sheets (MSDS) for all hazardous substances used at the site.

3. Certification Submittals
   a. Documentation that site personnel and supervisors have been trained as required by OSHA 29 CFR 1910.120.
   b. Documentation that at least two site personnel per work shift have current training in first aid and CPR.

1.04 HEALTH AND SAFETY PLANS

A. Develop and implement a site safety and health plan meeting the requirements of 29 CFR 1910.120, 29 CFR 1926 and other applicable federal, state and local regulations.

B. Prepare the plan specifically for the site and the anticipated activities based on available information on site conditions and hazards including as minimum:

1. Organizational structure

2. Comprehensive work plan

3. Hazard analysis for each site task

4. Employee training

5. Personnel protective equipment to be used for each task.

6. Medical surveillance

7. Site control measures and action level response requirements.

8. Decontamination procedures.

9. Emergency response plan.

10. Confined space entry procedures (if part of scope of work).

11. Spill containment program.

C. The plan shall be considered a living document, updated as conditions change during Project execution.

D. On-Site work shall not begin until the plan has been prepared and implemented.

E. Include the following in the implementation portion of the plan;

1. Monitoring for flammable atmospheres in the work area including excavations.

2. Monitoring of atmosphere for toxic vapors.

3. Monitoring for other hazards commonly associated with construction activities.

F. Prepare and comply with a project specific Health and Safety Plan. Approve the Health and Safety Plan by signature of a designated CONTRACTOR representative and provide to ENGINEER upon request prior commencing site work activities. CONTRACTOR shall be and remain liable for compliance by its employees, agents and subcontractors with the CONTRACTOR's Health and Safety Plan and procedures for the site and shall hold ENGINEER and OWNER harmless from all claims, damages, suits, losses and expenses in any way arising from non-compliance with the Health and Safety Plan.

G. Notify ENGINEER of any chemical products to be used by CONTRACTOR while on the Project site premises and furnish Material Safety Data Sheets (MSDS) for the chemical products, to ENGINEER, before any such chemicals are brought on the premises throughout the duration of this Agreement. Comply with standards set in Title 29 CFR 1910.1200 in providing such notifications and MSDS.

H. Provide all necessary safety equipment needed to perform the required work. Provide and properly utilize adequate ventilation and personal protection equipment, including respirators as required according to OSHA regulations.

I. Follow confined space entry procedures for personnel entering any excavations, sewers, manholes, vaults, pipes, or tanks on site.

J. Provide a combustible gas/oxygen deficiency indicator to monitor the breathing zones of the work areas.

K. Train personnel in the use, limitations, and proper fit of all necessary safety equipment.

L. Follow appropriate measures to guard against cold- and heat-related hazards, including frost-bite, hypothermia, heat stroke, heat exhaustion, and heat cramps. Be prepared to treat these hazards if encountered.

1.05 PUBLIC SAFETY

A. Protect finished and unfinished work against any damage, loss, or injury during the performance of and up to the completion day of the work.

B. Provide adequate protection around all openings wherever required to safeguard the work or the public.

C. Protect all openings and surface obstructions with barricades, signs, and warning devices in accordance with local, state, and federal requirements.

D. Place barricades at a reasonable distance from the location of the obstruction when a street is closed or there is an impedance to traffic. Signs and barricades: clearly visible at all times and conforming to federal, state, and local Standards.

1.06 PERSONNEL ORGANIZATION, QUALIFICATIONS AND RESPONSIBILITIES

A. Designate the Safety Representative per the General Conditions, a Site Safety and Health Officer and at least one alternate.

B. The Site Safety and Health Officer shall:

1. Implement and enforce the site health and safety plan.

2. Provide hazard communication information.

3. Be responsible for any safety environmental monitoring.

4. Have the authority to stop work activities if unacceptable health or safety conditions exist.

5. Coordinate and recommend corrective actions for identified health and safety deficiencies and oversee the corrective actions.

6. Be on-site during sediment dewatering activities.

C. Training

1. As a minimum, personnel performing duties with potential for exposure to on-site contaminates shall meet and maintain the following 29 CFR 1910.120 and 29 CFR 1926 training requirements:

   a. 40 hours of off-site health and safety training for hazardous waste.
   b. 3 days actual field experience under the direct supervision of a trained, experienced supervisor.
   c. 8 hours refresher training annually.

2. The Site Safety and Health Officer shall have an additional 8 hours management and supervisor training in accordance with 29 CFR 1910.120 and 29 CFR 1926.

1.07 EXCAVATIONS

A. Form sidewalls of excavations to provide a stable and safe working environment in the base of the excavation.

B. Provide sheeting and bracing or properly sloped excavations as required by all applicable federal, state and OSHA codes, and as may be necessary to protect life or property.

C. Eliminate activity around the top of the excavation, particularly the use of heavy equipment and machinery, while personnel are within the excavation.

D. Erect and maintain a 4-foot high fence around unattended excavations with slopes steeper than 3:1 (horizontal:vertical).

E. Current regulations promulgated by the Occupational Safety and Health Administration (OSHA) require that employers whose employees enter excavations have a "competent person" conduct inspection of these excavations and review supporting system. See 29 CFR Part 1926 (Subpart P). In the event that the Work defined by this agreement includes an excavation into which workers may enter, CONTRACTOR shall furnish a properly qualified "competent person" and shall be responsible for the duties of inspection and/or monitoring of excavations required of the "competent person" under 29 CFR Part 1926 (Subpart P).

PART 2 - PRODUCTS

A. Not Used.

PART 3 - EXECUTION

A. Not Used.

END OF SECTION

SECTION 02080

MATERIALS MANAGEMENT

PART 1 - GENERAL

1.01 SCOPE OF WORK

A. Excavation, handling, stockpiling, and off-site transportation and disposal, and tracking and documenting of excavated material.

B. Submit an Excavated Materials Management (EMM) Plan before beginning any excavation.

C. Provide minimum and contingency equipment decontamination.

D. Comply with all applicable regulations and recognized standards and regulatory practices.

1.02 RELATED SECTIONS

A. 01900 – Health and Safety

B. 02200 – Earthwork

C. 02324 – Trenching and Backfilling

1.03 RESPONSIBILITIES

A. Contractor's Responsibilities:

1. Establish and maintain site controls to prevent cross contamination to and from the remediation area.

2. Excavate, stockpile, load, transport and dispose of excess soil, rubble, and debris.

3. Load excavated soil directly onto trucks for transport, or temporarily place materials into stockpiles within a materials management area designated by Owner. Maintain stockpiles and the materials management area.

4. Prepare all documentation and/or permits required for off-site disposal of excess soil, rubble, and debris based on information provided by the Owner.

5. Decontaminate tools and equipment.

6. Provide all local, state, and federal permits required for work described in this Section.

B. Engineer's Responsibilities:

1. Review and approve Excavated Materials Management Plan.

2. Review proposed disposal facilities and disposal documentation.

3. Perform all field, mechanical, and analytical testing required to characterize the excavated material for reuse and/or off-site disposal.

C. Owner's Responsibilities:

1. Review and approve off-site reuse, recycling, or disposal facilities. The Owner reserves the right to reject any proposed disposal location, at no additional expense to the Owner.

2. Sign shipping documents as the designated generator for all material reused, recycled, or disposed of off-site.

1.04 APPLICABLE REGULATIONS

A. Conduct the Work in accordance with relevant regulations and policies, including, but not limited to:

1. Asbestos Waste Transportation, Nevada Administrative Code (NAC) 444.972.

2. Safety and Health Regulations for Construction subtitle "Excavations" 29 CFR 1926.651

3. Hazardous Waste Operations and Emergency Response, Federal Occupational Safety and Health Act (OSHA), 29 CFR 1910.120.

4. The Toxic Substances Control Act (TSCA), 40 CFR 760 and 761.

B. Store, handle, transport, and dispose of excavated materials in accordance with laws, codes, ordinances, and regulations of federal, state, and municipal authorities having jurisdiction. The Owner and the Engineer will not be responsible at any time for the Contractor's violation of any applicable regulations, or endangerment of laborers or others.

1.05 SUBMITTALS

A. Submit to the Engineer for approval an Excavated Materials Management (EMM) Plan. Allow ten (10) business days for Engineer's review of EMM Plan. Do not begin excavation activity until the Engineer approves the EMM Plan. Include in the EMM Plan:

1. A Staging area(s) and contamination control plan.

2. Work Sequencing Plan

3. Location(s), design, and operating plan for managing the excavation, loading, and equipment operation in order to prevent cross-contamination to and from the remediation area and transportation routes. Include proposed stockpile locations and secondary cover/containment provisions.

4. Procedures for stockpiling, and transporting excavated material.

5. Material tracking sheets for documenting the excavation, stockpiling, and final disposition of all excavated material.

6. Design an operating plan for contingency decontamination station. Include method of recording volume of discharge or disposal of decontamination water.

7. Monitoring and control measures for dust and storm water runoff.

8. Name, location, and classification of the proposed disposal, reuse, or recycling facilities for all classes of material described in Paragraph 3.3. Include a copy of each facility's permit (if applicable), acceptance criteria, and required sampling frequency and parameters for characterization for acceptance. Submittal shall include written confirmation from the disposal facility that they will accept the material if it meets their requirements.

9. Name, address, and license number of hauler who will transport material.

10. Brief description of the truck liners and covers that will be used to contain ACM and prevent leakage and dust blow off during transport of excavated materials.

B. Submit to the Engineer at the end of each day, excavated material and stockpile tracking information for each day, as specified in Paragraph 3.4A of this Section.

C. If the Contingency Decontamination station is built, submit records of decontamination water discharge and/or disposal.

D. Within 3 business days after transport off-site, submit completed shipping records signed by the transporter and receiving location for all excavated materials. Include copies of the receiving facility's weight slips.

PART 2 - PRODUCTS

2.01 STORAGE OF EXCAVATED MATERIALS

A. Provide a minimum 10-mil-thick polyethylene sheeting to completely cover the stockpiles. If required by the Engineer, provide a minimum 10-mil-thick polyethylene sheeting beneath soil stockpiles. Stockpile sheeting shall be UV resistant, cold crack resistant to minus 40 degrees Fahrenheit, and free of holes and foreign matter.

B. Provide secondary containment such as berms or hay bales to prevent sediment in runoff from leaving the Materials Management Area(s).

2.02 DECONTAMINATION

A. Provide materials and equipment for Minimum Decontamination, and, if required by the Engineer, Contingency Decontamination:

1. Minimum Decontamination: Provide a temporary, low pressure water system for decontamination of tools and equipment including clean water supply tank, water, hoses, and brushes, which the Contractor shall use to decontaminate tools and equipment at the end of every day of excavation of impacted materials, and before tools and equipment leave the Site. Connection to potable water supply is acceptable with written permission of the connection's owner/operator. Decontamination water from low-pressure system shall be collected and transported for treatment at the on-site water treatment facility.

2. Contingency Decontamination: If required in the opinion of the Engineer, construct and operate a decontamination pad of a minimum length to fit one 18-wheel dump trailer, and a minimum area to accommodate the largest piece of equipment to be used during excavation. Include a 6-inch containment berm, two layers of a minimum 20-mil plastic liner covered with crushed stone, and provisions for drainage, storage, and decontamination water disposal at the on-site water treatment facility.

PART 3 - EXECUTION

3.01 GENERAL

A. Immediately notify the Engineer of visible stains or unnatural odor of any excavated material, or if oil or potentially hazardous material is encountered.

B. Transport all excavated material to the Materials Management Area, except those identified by the Engineer as appropriate for direct loading, transporting, and off-site disposal.

C. Provide dust and storm water control measures. Prevent discharge of stockpiled material to storm drains and sewers. Control measures may include, but are not limited to, temporary berms, hay bales, and temporary covers. Remove control measures upon completion of the work.

3.02 STOCKPILING

A. Provide the Engineer access to perform headspace analyses, field testing, or other testing if desired. Results of the testing analyses shall be exchanged between the Contractor and the Engineer.

B. Disposal of material that is contaminated as a result of careless handling or use of unauthorized procedures shall be at the Contractor's expense. Delays of work resulting from temporary storage of excavated material, regardless of field classification by the Engineer, shall be at no additional cost to the Owner.

C. Stockpile excavated material separately based on the anticipated disposal location. At a minimum, separate excavated material with visible ACM soil impacts and asbestos debris from material that does not exhibit these characteristics. For all soil, follow the guidelines below:

1. If requested by the Engineer, place the first lift of material on a 10-mil-thick, polyethylene sheeting placed over the existing ground surface. Place the stockpile within the footprint of the Beta/Northwest Ditch excavation areas and divert storm water runoff from the stockpile(s) to prevent cross-contamination.

2. Cover the stockpile(s) at all times with 10-mil-thick polyethylene sheeting. Secure the sheeting in place with sand bags or equivalent to prevent dust blow-off and to withstand wind and rain.

3.03 OFF-SITE TRANSPORT AND DISPOSAL

A. Load and transport all identified impacted materials to the appropriate off-site disposal facilities as approved by the Owner.

B. Person(s) transporting the excavated materials shall be licensed and permitted to transport such material in state(s) having jurisdiction.

C. Trailers used for transport shall have covers to prevent dust fly off.

D. If necessary, dewater excavated materials prior to transport to prevent free water from developing during transport.

E. Do not transport excavated materials to any location that is not pre-approved by the Owner and Engineer.

F. Submit completed shipping paperwork, including facility weight slips, to the Owner within 3 business days of the transport.

G. Approved Disposal Facilities include:

1. Republic Services, Inc., Apex Regional Landfill, 13550 North Highway 93, PO Box 751600, Las Vegas, Nevada 89736, (702) 644-4210 for non-hazardous and asbestos containing material.

3.04 DECONTAMINATION

A. Minimum Decontamination: Decontaminate tools and equipment prior to tools and equipment leaving the Site, including a truck wheel wash if required by the opinion of the Engineer. Decontaminate all tools, heavy machinery, and excavating and hauling equipment used during excavation, stockpiling, and re-handling of excavated material. Decontaminate by hosing down tools, equipment, and machinery using the low-pressure water system.

B. Contingency Decontamination: If Contingency Decontamination is necessary in the opinion of the Engineer, construct, operate, and maintain a decontamination pad for equipment and vehicles entering and exiting the work area.

1. Construct the decontamination pads as specified in Paragraph 2.2 of this Section, and in accordance with the following:

a. Include wash down equipment including brushes and a supply of high-pressure (90 psi minimum) water and pressurized steam.

b. Provide a splashguard, 6-inch containment berm, and drainage system to collect and contain all decontamination pad wash water.

c. The use of drums or fractionation tanks for the storage of decontamination water is acceptable.

d. Decontamination water collection and storage units shall not leak.

e. Providing an area to store clean and spent decontamination water, and any resulting delays in the work shall be at no additional cost to the Owner.

2. Place the decontamination pad in the areas of excavation and loading of impacted materials. Operate and maintain the decontamination station.

3. Decontaminate excavation equipment, vehicles, and tools used in the excavating and stockpiling areas using high-pressure water and steam prior to leaving the excavation area. Remove all visible material and dust during decontamination. Decontamination is not acceptable if any amount of oil/hazardous material is present on the tools, equipment, or machinery after decontamination. The Engineer may conduct visual inspections and field testing to determine the acceptability of decontamination.

4. All decontamination water must be collected and disposed of at the on-site water treatment facility.

5. At the completion of the excavation work, dismantle and legally dispose of decontamination station. Steam clean the decontamination pads prior to dismantling, and transport decontamination liquids to the on-site water treatment facility.

END OF SECTION

SECTION 02200

EARTHWORK

PART 1 - GENERAL

1.01 SECTION INCLUDES

A. Excavating contaminated soils.

B. Providing, placing, and compacting of backfill materials.

1.02 RELATED SECTIONS

A. Excavated Material Management, Section 02080.

1.03 SUBMITTALS

A. Soil Materials: Submit 75-lb samples and results of recent (within previous month) testing laboratory grain size analyses for imported soils, material must conform to the specified gradations or characteristics as specified herein.

B. Chemical analysis confirming the proposed granular fill is not contaminated prior to importing soil onto site. **Please note, this testing may takes a much as 6-8 weeks to complete, so please plan accordingly to avoid construction delays.**

C. A report from a testing laboratory verifying that imported material is asbestos-free.

1.04 EXISTING CONDITIONS

A. Site Information:

1. Subsurface explorations have been performed at the project site. Electronic files of the boring logs are available from GEI Consultants, Inc. (contact George Onorato, (813) 404-6688.
2. The Contractor may perform additional test borings and other explorations at no cost to Owner.

B. Existing Utilities:

1. Locate existing underground utilities in areas of work. Provide adequate means of support and protection during earthwork operations.
2. Should uncharted, or incorrectly charted, piping or other utilities be encountered during excavation, consult utility owner immediately for directions. Cooperate with Owner and utility companies in keeping respective services and facilities in operation. Repair damaged utilities to satisfaction of utility owner.
3. Do not interrupt existing utilities serving facilities occupied and used by Owner or others during occupied hours, except when permitted in writing by Owner and then only after acceptable temporary utility services have been provided.
4. Provide minimum of 48-hour notice to Owner, and receive written notice to proceed before interrupting any utility.

C. Existing Extraction Wells: Identify, mark, and protect existing ground water extraction wells located within the work zone.

1.05 LAYOUT AND GRADES

A. Lay out all needed lines and grades not presently established at the site in accordance with the Contract Documents. Establish permanent benchmarks by employment of a registered land surveyor or professional civil engineer. Maintain all established bounds and benchmarks and replace any that are destroyed or disturbed. Bring any deviations from the locations and elevations indicated on the Drawings to the attention of the Engineer immediately.

B. Verify all existing ground surface elevations within the contract limits.

PART 2 - PRODUCTS

2.01 SOIL MATERIALS

A. General Backfill: Provide backfill material free from stones or lumps of material exceeding 3 inches in greatest dimension and free from sod, frozen earth, and organic materials.

B. Granular Backfill: Clean natural sand or a mixture of sand with gravel, crushed gravel, or crushed stone conforming to the following specification, per Nevada DOT Standard Specification 207.02.02:

Sieve Sizes	Percent Passing by Mass
3 inch	100
No. 4	35-100
No. 30	20-100
No. 200	0-12

A. Required Analytical: provide at least one representative composite sample for every 25,000 cubic yards of imported clean material brought to the site: Required analytical parameters list is as follows:

Parameters	Analytical Methods
Ions (bromide, bromine, chloride, chlorine (soluble), chlorite, fluoride, nitrate, nitrite, orthophosphate, and sulfate)	EPA 300.0/300.1
Perchlorate	EPA 314.0
RCRA 8 Metals	EPA 6020/6010B
Organochlorine Pesticides	EPA 8081A
Semi-volilate Organic Compounds	EPA 8270C
Asbestos Analyses by PLM	EPA Method 600/R-93/116 Section 2.3

2.02 USE OF SOIL MATERIALS

A. Use Granular Backfill to backfill pipe trenches to 12 inches above pipe, as indicated on the Drawings or specified herein.

B. Use General Backfill to backfill all excavations, including pipe trenches above Granular Backfill, as indicated on the Drawings or specified herein.

PART 3 - EXECUTION

3.01 GENERAL

A. Perform excavations in accordance with the design DRAWINGS.

B. Protect existing structures, utilities, sidewalks, pavements, and other facilities not designated for removal from damage by equipment, settlement, undermining, washout, and other hazards created by earthwork operations.

C. Perform excavation work in compliance with OSHA guidelines and regulations.

3.02 EXCAVATION

A. Excavation is "Unclassified" and includes excavation to subgrade elevations indicated regardless of character of materials and obstructions encountered and shall be understood to include rock, earth, fill, foundations, pavements, curbs, piping and debris.

B. Excavation Subgrade: Conform to elevations and dimensions shown within a tolerance of plus or minus 0.10 feet.

3.03 DEWATERING

A. Dewatering is prohibited.

3.05 TESTING FOR COMPACTION

A. Compact soil to not less than the following percentages of maximum dry density determined in accordance with ASTM D1557, Method C. Compact soil using the lift thicknesses indicated.

1. Granular Backfill and General Backfill: compact each lift to 90% of the modified Proctor maximum dry density with a nominal lift thickness of 12 inches.
2. In-place compaction testing of soil backfill by the sand cone method, ASTM D 1556, or by nuclear methods, ASTM D 6938, a compaction test shall be performed at a rate of 1 test per 500 feet of trench per lift of backfill placed.
3. Determine laboratory moisture-density relationship of a representative soils sample in accordance with ASTM D 1557, Method C every 10,000 cubic yards.

C. Method Compaction may be approved within excavations with side slopes of greater than 1.5:1, if approved by the ENGINEER.

3.06 BACKFILL

A. Place acceptable soil material in layers to required grade elevations for each area classification listed below using granular fill.

B. Backfill excavations as promptly as work permits, but not until completion of the following:

1. Quality control and quality assurance testing, and approval.
2. Removal of shoring and bracing, and backfilling of voids with satisfactory materials.

C. Placement of Fill:

1. Do not place fill on surfaces that are saturated, soft or muddy.
2. Place fill in level, uniform layers.

3.07 GRADING

A. Uniformly grade areas within limits of grading under this section including adjacent transition areas. Smooth finished surface within specified tolerances, compact with uniform levels or slopes between points where elevations are indicated, or between such points and existing grades.

3.08 FIELD QUALITY CONTROL

A. CONTRACTOR shall correct deficiencies to meet Contract Documents. If specification criteria cannot be met, or unusual weather conditions hinder work, CONTRACTOR shall develop and suggest solutions to ENGINEER for approval.

B. CONTRACTOR shall schedule appropriate retests when defect has been corrected. Retests by ENGINEER shall verify that defect has been corrected before any additional WORK is performed by CONTRACTOR in area of deficiency.

3.09 FIELD QUALITY ASSURANCE

A. Quality assurance testing during construction: Allow ENGINEER to test and observe subgrades and backfill layers before further construction work is performed.

B. If, in opinion of ENGINEER based on testing and observation, fills have been placed below specified percent compaction, provide additional compaction at no additional expense.

3.10 QUALITY ASSURANCE TESTING

A. Quality assurance testing of granular materials shall be performed to document material used on site. The following tests shall be conducted:

1. Particle size analysis (ASTM D 1140, D 422) at a rate of one per 10,000 cubic yards of in-place material
2. Moisture density relationship ASTM D 1557 Method C at a rate of 1 test per 10,000 cubic yards of in-place material.
3. Density of testing of backfill material at a rate of 1 test per 500 linear feet of trench per 12-inch lift of soil placed.

B. Fill materials not in conformance shall be removed and replaced at no cost to the OWNER.

3.09 PROTECTION AND REPAIR

A. Protect newly graded areas from traffic and erosion. Keep free of trash and debris.

B. Repair and reestablish grades in settled, eroded, and rutted areas to specified tolerances.

C. Where completed compacted areas are disturbed by subsequent construction operations or adverse weather, scarify surface, reshape, and compact to required percent compaction prior to further construction.

END OF SECTION

SECTION 02324

TRENCHING AND BACKFILLING

PART 1 GENERAL

1.01 SECTION INCLUDES

A. Excavate trenches for utilities to locations as shown on the Drawings.

B. Placement of bedding and backfill to elevations shown.

C. Dewatering system as warranted by the site conditions to perform timely and safe progress of the work.

1.02 REFERENCES

A. ASTM C136 - Standard Test Method for Sieve Analysis of Fine and Coarse Aggregates.

B. ASTM D1557 - Standard Test Methods for Laboratory Compaction Characteristics of Soil Using Modified Effort (56,000 ft-lbf/ft^3 (2,700 kN-m/m^3).

C. ASTM D6938 - Standard Test Method for In-Place Density and Water Content of Soil and Soil Aggregate by Nuclear Methods (Shallow Depth).

1.03 FIELD MEASUREMENTS

A. Engineer to verify the survey benchmark and intended elevations for the work are as shown on Drawings.

1.04 MEAUREMENT AND PAYMENT

A. Measurement and payment shall be in accordance with Section 01275.

PART 2 PRODUCTS

2.01 BEDDING AND BACKFILL MATERIALS

A. General Backfill: Provide backfill material free from stones or lumps of material exceeding 3 inches in greatest dimension and free from sod, frozen earth, and organic materials.

B. Granular Backfill: Clean natural sand or a mixture of sand with gravel, crushed gravel, or crushed stone conforming to the following specification, per Nevada DOT Standard Specification 207.02.02:

Sieve Sizes	Percent Passing by Mass
3 inch	100
No. 4	35-100
No. 30	20-100
No. 200	0-12

C. Unstable materials containing peat or other organics, or materials which contain large amounts of refuse, broken pavement, boulders, roots, stumps, or other debris, shall not

be incorporated into the backfill, and shall be disposed of offsite at no extra cost to the Owner.

PART 3 EXECUTION

3.01 EXAMINATION

A. Verify fill materials to be reused is acceptable.

B. Test granular fill material obtained from off-site in accordance with Section 02200.

C. Contractor to obtain prior written approval and certification of the borrow source from the Engineer.

3.02 PREPARATION

A. Identify required lines, levels, contours, and datum.

B. Maintain and protect existing utilities remaining, which pass through work area.

C. Protect plant life, lawns, and other features remaining as a portion of final landscaping.

D. Protect benchmarks, wells, utilities, and other existing structures from excavation equipment and vehicular traffic.

E. Protect above and below grade utilities which are to remain.

F. Cut out soft areas of subgrade incapable of in-situ compaction. Backfill with soil backfill material and compact to density equal to or greater than requirements for subsequent backfill material.

G. Contractor shall be allowed for a trench width at bottom of 36 inches (for all sizes of pipes) and four inches below the underside of the pipe barrel for soils. Contractor shall comply with all rules and regulations and precautions laid out by OSHA, and by utility agencies for a safe operation. Any additional excavation outside the limits, and installing bedding and backfill to replace excessive trench excavation shall not be paid for separately, and Contractor to include such costs in other pay items.

H. Contractor shall not be allowed more than 200 linear feet of open trench at one time. Under unusual circumstances, the Engineer may authorize more than 200 linear feet of trench to be open, provided that pedestrian and driveway crossings are maintained at intervals of not more than 200 feet and that not more than one street intersection is closed to traffic.

3.03 EXCAVATION

A. Excavate subsoil required for utilities trenches as provided on Drawings.

B. Cut trenches sufficiently wide to enable installation of utilities and allow inspection per trench detail on Drawings.

C. Provide trench boxes, shoring, or other support as necessary to support excavations based on site soil conditions.

D. Excavation shall not interfere with normal 45 degree bearing splay of foundations of nearby structures.

E. Hand trim excavation. Hand trim for bell and spigot pipe joints. Remove loose matter.

F. Remove lumped subsoil, boulders, and rock.

G. Correct unauthorized excavation at no cost to Owner.

H. Correct areas over-excavated by error.

3.04 BEDDING

A. Support pipe and conduit during placement and compaction of bedding fill.

B. Supply and place Class C bedding material (Granular Backfill) below pipe in accordance with Nevada DOT Standard Detail Sheet R-1.1.6.

3.05 BACKFILLING

A. Backfill trenches to contours and elevations with unfrozen material.

B. NDOT Granular Backfill shall be used as pipe bedding and backfill material from 6 inches below pipe to 12 inches above pipe.

C. Remainder of soil backfill above Granular Backfill shall consist of clean soil fill with a maximum particle size of 3 inches.

D. Systematically backfill to allow maximum time for natural settlement. Do not backfill over porous, wet, frozen or spongy subgrade surfaces.

E. General Backfill: Place and compact materials in continuous layers not exceeding 12" loose depth.

F. Maintain optimum moisture content of backfill materials to attain required compaction of 90% of maximum density, as determined by modified Proctor (ASTM D1557).

G. Stockpile surplus backfill materials as directed by the Engineer.

H. Employ a placement method that does not disturb or damage utility conduits in the trench.

3.06 TOLERANCES

A. The upper limits of backfill shall be top of subgrade under roadways (approaches, sidewalks, etc.). In other areas, upper limit shall be bottom of topsoil.

3.07 FIELD QUALITY CONTROL

A. Field inspection and testing will be performed by the Engineer.

B. Tests and analysis of fill material will be performed in accordance with the Section 02200.

C. If tests indicate work does not meet specified requirements, remove work, replace and retest at no cost to Owner, and as approved by the Engineer.

END OF SECTION

SECTION 02521

ABANDONMENT OF EXISTING PIPES

PART 1 - GENERAL

1.01 SECTION INCLUDES

A. All required notifications and documentation for abandoning utilities.

B. Submittals.

C. Locating, cutting, capping, and disposing of a section of a 18-inch diameter Asbestos Concrete Pipe (The Pitman By-Pass)

D. Retain a licensed abatement contractor to cut and remove the Asbestos Concrete Pipe from the site.

E. Locating, cutting, capping and disposing of a section of a 24-inch diameter pipe (The Trade Effluent Line).

F. Locating, cutting, capping and disposing of a section of the existing CSD Waste Line.

G. Cutting, capping, and disposing of other unidentified pipe lines.

H. Remove and dispose of the materials from the site in accordance with federal, state, and local laws and regulations.

I. Project record documents.

1.02 SUBMITTALS

A. At least 15 days prior to commencing abandonment activities, submit an Abandonment Plan, describing proposed methods of:

1. Notifying proper authorities and confirming the pipes are not in service.

2. Excavation.

3. Cutting and removing sections of pipe. Provide the name of the licensed contractor who will cut and remove the asbestos concrete pipe.

4. Capping sections of pipe that remain in place.

5. Filling HDPE culverts in-place, including proposed concrete grout mix.

1.03 EXISTING CONDITIONS

A. The Contractor shall familiarize themselves with the site conditions including but not limited to access to the pipe locations, pipe depths, and types of pipe materials.

B. The Pitman By-Pass is owned and operated by the United States Bureau of Reclamation.

C. The Trade Effluent Line and CSD Waste Line pipelines are owned and operated by the Titanium Metals Corporation.

D. Other unidentified pipelines are assumed to be owned by Titanium Metals Corporation.

PART 2 - PRODUCTS

2.1 Concrete Grout Mix Design

A. Compressive Strength: No less than 2,000 psi at 28 days.

PART 3 - EXECUTION

3.01 PIPE ABANDONMENT

A. Perform all operations in accordance with the approved submittal.

B. Confirm pipes are not active prior to beginning work.

C. Cut and remove sections of pipes as indicated on Drawings.

D. Retain a licensed abatement contractor to cut and remove the concrete asbestos pipe from the site.

E. Cap ends of pipe sections to remain with brick and mortar. The cap shall extend a minimum of 16 - inches into the pipe from the end.

F. Remove and dispose of the pipe materials from the site in accordance with federal, state, and local laws and regulations.

G. Survey the final location, invert elevation, and top elevation of the pipe sections left in place.

END OF SECTION

SECTION 02821

CHAIN-LINK FENCES AND GATES

PART 1 GENERAL

1.01 RELATED DOCUMENTS

A. Drawings and general provisions of the Contract, including General and Supplementary Conditions and Division 1 Specification Sections, apply to this Section.

B. Chain Link Fence Manufacturers Institute Project Manual.

C. Nevada Department of Transportation (NDOT) Standard Plans for Road and Bridge Construction.

1.02 SUMMARY

A. This Section includes the following:

1. Chain-Link Fences: Industrial with visual screening
2. Gates: Double Swing

1.03 PERFORMANCE REQUIREMENTS

A. Structural Performance: Provide chain-link fences and gates capable of withstanding the effects of gravity loads and the following loads and stresses within limits and under conditions indicated:

1. Minimum Post Size and Maximum Spacing for Wind Velocity Pressure: Determine based on mesh size and pattern specified, and on the following minimum design wind pressures and according to CLFMI WLG 2445:

a. Wind Speed: 80 mph
b. Fence Height: 6 feet
c. Line Post Group: IA, ASTM F 1043, Schedule 40 steel pipe
d. Wind Exposure Category: B

2. Determine minimum post size, group, and section according to ASTM F 1043 for framework up to 12 feet high, and post spacing not to exceed 10 feet.

B. Visual screening shall be incorporated into fence to reduce visibility of contents inside fence.

1.04 SUBMITTALS

A. Product Data: Include construction details, material descriptions, dimensions of individual components and profiles, and finishes for chain-link fences and gates.

1. Fence and gate posts, rails, and fittings.
2. Chain-link fabric, reinforcements, and attachments.
3. Gates and hardware.

B. Shop Drawings: Show locations of fences, gates, posts, rails, tension wires, details of extended posts, extension arms, gate swing, or other operation, hardware, and

accessories. Indicate materials, dimensions, sizes, weights, and finishes of components. Include plans, gate elevations, sections, details of post anchorage, attachment, bracing, and other required installation and operational clearances.

C. Product Certificates: For each type of chain-link fence and gate signed by product manufacturer.

1. Strength test results for framing according to ASTM F 1043.

D. Qualification Data: For Installer

E. Field Quality-Control Test Reports

1.05 QUALITY ASSURANCE

A. Installer Qualifications: An experienced installer who has completed chain-link fences and gates similar in material, design, and extent to those indicated for this Project and whose work has resulted in construction with a record of successful in-service performance.

B. Engineering Responsibility: Preparation of data for chain-link fences and gates, including Shop Drawings, based on testing and engineering analysis of manufacturer's standard units in assemblies similar to those indicated for this project.

1.06 PROJECT CONDITIONS

A. Field Measurements: Verify layout information for chain-link fences and gates shown on Drawings in relation to property survey and existing structures. Verify dimensions by field measurements.

B. Interruption of Existing Utility Service: Do not interrupt utility services to facilities occupied by Owner or others unless permitted under the following conditions and then only after arranging to provide temporary utility services according to requirements indicated:

1. Notify Owner no fewer than three (3) days in advance of proposed interruption of utility services.

2. Do not proceed with interruption of utility services without Owner's written permission.

1.07 MEASUREMENT AND PAYMENT

A. Measurement and payment shall be in accordance with Section 01275.

PART 2 PRODUCTS

2.01 MANUFACTURERS

A. Manufacturers: Subject to compliance with requirements, provide products by one of the following:

1. Chain-Link Fences and Gates:
   a. Master – Halco
   b. Merchants Metal
   c. Security Fabricators

d. Century Fence Company
e. Approved Equal

2.02 CHAIN-LINK FENCE FABRIC

A. General: 6 feet. Provide fabric in one-piece heights measured between top and bottom of outer edge of selvage knuckle or twist. Comply with ASTM A 392, CLFMI CLF 2445, and requirements indicated below:

1. Steel Wire Fabric: Metallic-coated wire with a diameter of 0.148 inches. Nine (9) gauge steel wire.

a. Mesh Size: 2 inches
b. Weight of Metallic (Zinc) Coating: ASTM A 392, Type II, Class 1, 1.2 oz./sq. ft. with zinc coating applied after weaving.
c. Weight of Zn-5-Al-MM Aluminum-Mischmetal Alloy Coating: ASTM A 392, Type II, Class 1, 1.2 oz./sq. Ft. with zinc coating applied after weaving.
d. Coat selvage ends of fabric that is metallic coated before the weaving process with manufacturer's standard clear protective coating.

2. Selvage: Knuckled at both selvages

2.03 INDUSTRIAL FENCE FRAMING

A. Posts and Rails: Comply with ASTM F 1043 for framing, ASTM F 1083 for Group IC round pipe, and following:

1. Group: IA, round steel pipe, Schedule 40
2. Fence Height: 6 feet
3. Strength Requirement: Heavy industrial according to ASTM F 1043
4. Post Diameter and Thickness: According to ASTM F 1043 and ASTM F 1083
5. Post Size and Thickness: According to ASTM F 1043

a. Top Rail: 1.66 O.D. inches, Type I
b. Line Post: 2.375 O.D. inches, Type I
c. End, Corner and Pull Post: 3.00 O.D. inches, Type I

i. Pull posts shall be installed at 300 foot intervals with bracing same as for terminal posts.

d. Swing Gate Post: According to ASTM F 900, 6.625 O.D. (min.) inches round

i. When necessary to meet this requirement due to the total weight of the gate leaf the gate post shall be larger than 6.625 inches.
ii. The Contractor shall be responsible for determining gate post size prior to submitting a Bid.

6. Coating for Type I Round Posts:

a. Hot dipped galvanized with a minimum average zinc coating of 1.8 oz./sq. ft. meeting ASTM F 1083 for standard weight (Schedule 40) galvanized pipe.

7. Coating for Steel I Framing and all other Iron Parts:

a. Zinc Coating:

i. Hot dipped using Grade E zinc with a minimum average zinc coating of 1.8 oz./sq. ft.

2.04 TENSION WIRE

A. General: Provide horizontal tension wire at the following locations:

1. Extended along bottom of fence fabric for entire fence length.
2. Extended along top of fence fabric only for Alternate Deduct A.

B. Metallic-Coated Steel Wire: Seven (7) gauge, 0.177 inch diameter, marcelled tension wire complying with ASTM A 824, and the following:

1. Metallic Coating: Type II, Class 2, zinc coated (galvanized) by hot-dip process, with the following minimum coating weight:
   a. 1.20 oz./sq. ft.

2.05 INDUSTRIAL SWING GATES

A. General: Comply and ASTM F 900 for double swing gate types

1. Metal Pipe and Tubing: Galvanized steel. Comply with ASTM F 1043 and ASTM F 1083 for materials and protective coatings.

B. Frames and Bracing: Fabricate members from round, galvanized steel tubing with outside dimension and weight according to ASTM F 900 and the following:

1. Gate Fabric Height: 6 feet
2. Leaf Width: 15 feet
3. Frame Members:

   a. Tubular Steel: 1.90 (min) inches round.
   b. Designed for the width and built so that the outer members shall not sag in excess of 1% of the gate leaf width or 2 inches.
   c. Additional horizontal, vertical, or diagonal member or diagonal truss rods may be needed to comply with the above requirement.

4. Gate leaves shall have vertical interior bracing at maximum intervals of 8 feet.

C. Gate Fabric:

1. Same type as used in fence construction. The fabric shall be attached securely to the gate frame at intervals not exceeding 15 inches.

D. Zinc-Coated steel frames shall be in accordance with ASTM Specifications F 1043 and F 1083, or a combination thereof, and shall match that selected for any adjoining fence framework. Welded joints shall be coated in accordance with Practice A780, employing a zinc-rich paint.

E. Frame Corner Construction:

1. Welded for all panels.

F. Double Gate Latch:

1. Gate Latch shall be a “frost free latch” arranged to engage the gate stop.

a. “Pioneer” brand or equal

2. Locking devices shall be constructed so that the “frost free latch” cannot be raised when the gate is locked.
3. The latching devices shall have provision for a padlock.
4. Latches shall permit operation from both sides of the gate.
5. Any chains and/or padlocks shall be furnished and installed by the Owner.

G. Gate Stops shall be provided for all double gates.

H. Keepers shall be provided for each gate leaf over 5 feet.

I. Gate Hinges:

1. Hinges shall be structurally capable of supporting the gate leaf and allow the gate to open and close without binding.
2. Designed to permit the gate to swing a full 180°.
3. “Bulldog” style hinges shall be used.

J. Gate Latches:

1. Shall permit operation from both sides of gate.

K. Gate Accessories:

1. All gate accessories shall be of the materials as specified for the fence.

2.06 FITTINGS

A. General: Comply with ASTM F 626

B. Post and Line Caps: Provide for each post

1. Line post caps with loop to receive top rail.

C. Rail and Brace Ends: Attach rails securely to each gate, corner, pull, and end post.

D. Rail Fittings: Provide the following:

1. Top Rail Sleeves: Pressed-steel or round-steel tubing not less than 6 inches long.
2. Rail Clamps: Line and corner boulevard clamps for connecting intermediate and bottom rails in the fence line-to-line posts.

E. Tension and Brace Bands: Pressed steel

F. Tension Bars: Steel, not less than 3/16 inch by ¾ inch, and length not less than 2 inches shorter than full height of chain-link fabric. Provide one bar for each gate and end post, and two for each corner and pull post, unless fabric is integrally woven into post.

G. Truss Rod Assemblies: Steel, hot-dip galvanized after threading rod and turnbuckle or other means of adjustment.

H. Tie Wires, Clips, and Fasteners: According to ASTM F 626.

1. Standard Round Wire Ties: For attaching chain-link fabric to posts, rails, and frames, complying with the following:

a. Hot-Dip Galvanized Steel: 11 gauge wire; galvanized coating thickness matching coating thickness of chain-link fence fabric.

I. Finish:

1. Metallic Coating for Pressed Steel or Cast Iron: Not less than 1.2 oz./sq. ft. zinc.

2.07 CAST-IN-PLACE CONCRETE

A. Materials: Portland cement complying with ASTM C 150, Type I aggregates complying with ASTM C 33, and potable water for ready-mixed concrete complying with ASTM C 94. Measure batch and mix project-site-mixed concrete according to ASTM C 94.

1. Concrete Mixes: Normal-weight concrete air entrained with not less than 3,000-psi compressive strength (28 days), 3-inch slump, and 1-inch maximum size aggregate.

B. Materials: Dry-packaged concrete mix complying with ASTM C 387 for normal-weight concrete mixed with potable water according to manufacturer's written instructions.

PART 3 EXECUTION

3.01 EXAMINATION

A. Examine areas and conditions, with Installer present, for compliance with requirements for a verified survey of property lines and legal boundaries, site clearing, earthwork, and other conditions affecting performance.

1. Do not begin installation before final grading is completed, unless otherwise permitted by Engineer/Owner.
2. Proceed with installation only after unsatisfactory conditions have been corrected.

3.02 PREPARATION

A. Stake locations of fence lines, gates, and terminal posts. Do not exceed intervals of 500 feet or line of sight between stakes. Indicate locations of utilities, lawn sprinkler system, underground structures, benchmarks, and property monuments.

3.03 INSTALLATION, GENERAL

A. Installation of chain-link fencing and gates shall meet the requirements of ASTM F 567 which are not intended to preclude any practice that has a proven performance equal to or better under varying conditions nor do they purport to address all of the safety problems involved.

1. Install fencing on established boundary lines inside property line.

3.04 CHAIN-LINK FENCE INSTALLATION

A. Post Excavation: Drill or hand-excavate holes for posts to diameters and spacings indicated, in firm, undisturbed soil.

B. Post Setting: Set posts in concrete at indicated spacing into firm, undisturbed soil.

1. Verify that posts are set plumb, aligned, and at correct height and spacing, and hold in position during setting with concrete.
2. Concrete Fill: Place concrete around posts to dimensions indicated and vibrate or tamp for consolidation. Protect above-ground portion of posts from concrete splatter.

    a. Concealed Concrete: Top 6 inches below grade to allow covering with surface material.

C. Terminal Posts: Locate terminal end, corner, and gate posts per ASTM F 567 and terminal pull posts at changes in horizontal or vertical alignment of 30 degrees or more.

D. Line Posts: Space line posts equidistant at intervals not exceeding 10 feet o.c.

E. Post Bracing and Intermediate Rails: Install according to ASTM F 567, maintaining plumb position and alignment of fencing. Install braces at end and gate posts and at both sides of corner and pull posts.

1. Locate horizontal braces at midheight of fabric 6 feet or higher, on fences with top rail. Install so posts are plumb when diagonal rod is under proper tension.

F. Tension Wire: Install according to ASTM F 567, maintaining plumb position and alignment of fencing. Pull wire taut, without sags. Fasten fabric to tension wire with 11 gauge hog rings of same material and finish as fabric wire, spaced a maximum of 24 inches o.c. Install tension wire in locations indicated before stretching fabric.

1. Top Tension Wire: Install tension wire through post cap loops.
2. Bottom Tension Wire: Install tension wire within 6 inches of bottom of fabric and tie to each post with not less than same diameter and type of wire.

G. Top Rail: Install according to ASTM F 567, maintaining plumb position and alignment of fencing. Run rail continuously through line post caps, bending to radius for curved runs and terminating into rail end attached to posts or post caps fabricated to receive rail at terminal posts. Provide expansion couplings as recommended in writing by fencing manufacturer.

H. Bottom Rails: Install, spanning between posts.

I. Chain-Link Fabric: Apply fabric to outside of enclosing framework. Leave 1 inch between finish grade or surface and bottom selvage, unless otherwise indicated. Pull fabric taut and tie to posts, rails, and tension wires. Anchor to framework so fabric remains under tension after pulling force is released.

J. Tension or Stretcher Bars: Thread through fabric and secure to end, corner, pull, and gate posts with tension bands spaced not more than 15 inches o.c.

K. Tie Wires: Use wire of proper length to firmly secure fabric to line posts and rails. Attach wire at 1 end to chain-link fabric, wrap wire around post a minimum of 180 degrees, and attach other end to chain-link fabric per ASTM F 626. Bend ends of wire to minimize hazard to individuals and clothing.

1. Maximum Spacing: Tie fabric to line posts at 15 inches o.c. and to braces at 24 inches o.c.

L. Fasteners: Install nuts for tension bands and carriage bolts on the side of the fence opposite the fabric side.

3.05 GATE INSTALLATION

A. Install gates according to manufacturer's written instructions, level, plumb, and secure for full opening without interference. Attach fabric as for fencing. Attach hardware using tamper-resistant or concealed means. Install ground-set items in concrete for anchorage. Adjust hardware for smooth operation and lubricate where necessary.

3.06 ADJUSTING

A. Gate: Adjust gate to operate smoothly, easily, and quietly, free of binding, warp, excessive deflection, distortion, nonalignment, misplacement, disruption, or malfunction, throughout entire operational range. Confirm that latches and locks engage accurately and securely without forcing or binding.

B. Lubricate hardware, gate operator, and other moving parts.

END OF SECTION

SECTION 03300C

CAST-IN-PLACE CONCRETE

PART 1 - GENERAL

1.01 SECTION INCLUDES

A. Cast-in-place concrete for the air stripper pad.

B. Concrete formwork.

C. Concrete reinforcing.

D. Concrete curing.

1.02 REFERENCES

A. ACI 304 - Recommended Practice for Measuring, Mixing, Transporting and Placing Concrete.

B. ACI 306R - Cold Weather Concreting.

C. ACI 308 - Standard Practice for Curing Concrete.

D. ASTM C 33 - Concrete Aggregates.

E. ASTM C 94 - Ready-Mixed Concrete.

F. ASTM C 150 - Portland Cement.

G. ASTM C 260 - Air Entraining Admixtures for Concrete.

H. ASTM C 494 - Specifications for Chemical Admixtures for Concrete

I. ASTM A 615 - Specifications for Deformed and Plain Carbon-Steel Bars for Concrete Reinforcement

1.03 SUBMITTALS

A. Submit under provisions of Section 01300.

B. Submit Portland cement and fly ash test reports at least 14 days prior to placement of concrete.

C. Submit manufacturer's data for concrete admixtures, bonding agents, finishing compounds, and flow joint filler.

D. Submit aggregate test reports and concrete mix design at least 14 days prior to placement of concrete.

E. Submit product data for chemical-resistant coating at least 14 days prior to use.

1.04 QUALITY ASSURANCE

A. Acquire cement and aggregate from same source for all Work.

B. Conform to ACI 306R when concreting during cold weather.

PART 2 - PRODUCTS

2.01 CONCRETE MATERIALS

A. Cement: ASTM C150, Type I - Normal.

B. Fly Ash: ASTM C 618, Class C.

C. Fine and Coarse Aggregates: ASTM C 33.

D. Water: Clean and not detrimental to concrete.

2.02 ADMIXTURES

A. Air Entrainment: ASTM C 260; “Darex II” manufactured by W.R. Grace & Company or equal.

B. Water-Reducer: ASTM C 494, Type A, “WRDA-82” manufactured by W.R. Grace & Company or equal.

2.03 REINFORCEMENT

A. Reinforcing Steel: ASTM A 615, 60 ksi yield grade; deformed carbon-steel bars, epoxy coated.

2.04 FORMWORK

A. Use either wood and plywood faced or preformed steel forms for concrete forming. Wood forms are not allowed where finished surface will be exposed to view.

2.05 CONCRETE MIX

A. Mix and deliver concrete in accordance with ASTM C 94.

B. 4,000 psi concrete - 40% fly ash at 1:1.25, cement to fly ash replacement ratio
Coarse aggregate size: ASTM C 33 No. 67
Minimum compressive strength at 28 days: 4,000 psi
Minimum cement content: 310 lbs/cy
Minimum fly ash content: 251 lbs/cy
Air Entraining Agent: Compatible with cement and as needed for air content to provide required air for exposure condition.

C. Calcium chloride is not permitted in any concrete mixes.

D. Add air entraining agent to normal weight concrete mix for work exposed to exterior conditions.

E. Add water-reducing admixture to all concrete mixes.

2.06 CHEMICAL RESISTANT COATING

A. Interior surfaces of wetwells shall be coated with chemical resistant coating system equivalent to DeVoe Devran 124.

PART 3 - EXECUTION

3.01 EXAMINATION

A. Verify site conditions prior to placing concrete.

B. Verify requirements for concrete cover over reinforcement as shown on drawings.

C. Verify that anchors, reinforcement, and other items to be cast into concrete are accurately placed, positioned securely, and will not cause hardship in placing concrete.

3.02 PREPARATION

A. Prepare previously placed concrete by cleaning with steel brush and applying bonding agent in accordance with manufacturer's instructions.

3.03 PLACING REINFORCEMENT

A. Place, support, and secure reinforcement against displacement.

B. Maintain concrete cover around reinforcement as shown on drawings.

3.04 PLACING CONCRETE

A. Place concrete in accordance with ACI 304.

B. Notify ENGINEER minimum 24 hours prior to commencement of operations.

C. Ensure reinforcement, inserts, and embedded parts, are not disturbed during concrete placement.

D. Maintain records of concrete placement. Record date, location, quantity, air temperature, and test samples taken.

E. Place concrete continuously between predetermined expansion, control, and construction joints.

3.05 CURING AND PROTECTION

A. Immediately after placement, protect concrete from premature drying, excessively hot or cold temperatures, and mechanical injury.

B. Maintain concrete with minimal moisture loss at relatively constant temperature for period necessary for hydration of cement and hardening of concrete.

3.06 FIELD QUALITY CONTROL

A. Field testing will be performed under provisions of Section 01400.

B. Provide free access to Work and cooperate with appointed testing firm.

C. Four concrete test cylinders will be taken for every 100 or less cubic yards of concrete placed.

D. One additional test cylinder will be taken during cold weather concreting, cured on job site under same conditions as concrete it represents.

E. One slump test will be taken for each set of test cylinders taken.

3.07 DEFECTIVE CONCRETE

A. Defective Concrete: Concrete not conforming to required lines, details, dimensions, tolerances, or specified requirements.

B. Repair or replacement of defective concrete will be determined by the ENGINEER.

C. Do not patch, fill, touch-up, repair, or replace exposed concrete except upon express direction of ENGINEER for each individual area.

3.08 CHEMICAL RESISTANT COATING

A. Concrete surface shall be dry and brush-blasted or power scarified.

B. Coatings to be applied in strict accordance with manufacturer's recommendations.

END OF SECTION

SECTION 11300

GROUNDWATER EXTRACTION PUMPS

PART 1 - GENERAL

1.01 GENERAL

A. Install nineteen centrifugal submersible EPG SurePumps, Model TSPPT 2-3 with two impeller stages. Each 4" vertical unit shall be suitable for extraction well installation with a center-mounted pressure transducer. Each unit shall come with a 0.5 HP, submersible electric motor for operation on 230 volts, 1 phase, 60 hertz service with 65 feet of power cable. Each TSP SurePump shall have a 1 ¼ inch threaded discharge nozzle and be capable of delivering between 2 and 10 GPM at 44 to 52 feet of TDH. Each unit shall be fitted 65 feet of flexible discharge hose and 65 feet of stainless steel lifting cable of sufficient strength to permit removal of the unit.

1.02 DESIGN

A. Each SurePump TSP pump shall be capable of pumping contaminated groundwater for spill recovery, leachate, purge, and sampling applications. A transmitter mount shall be integral to the pump for liquid level control. The pump shall be equipped with a vent valve to assist with the evacuation of air from the pump.

B. Transducer mount shall be below or above pump to maintain minimum pump diameter to allow pump to fit into existing well casings with inside diameter of 4.5 inches.

1.03 WARRANTY

A. All pumps shall be warranted for a period of 12 months from the date of installation.

PART 2 - PRODUCTS

2.01 MATERIALS

A. Major components shall be made of 304 stainless steel, seals, and bearings are to be made of Teflon™. In addition, all fasteners shall be 304 stainless steel.

2.02 CHECK VALVES

A. Each unit shall include a built-in check valve, with housing and disc of 304 stainless steel and check valve seat of Teflon™.

2.03 SHAFTS

A. The shafts shall be of 304 stainless steel and rotate on Teflon™ bearings which are product lubricated.

2.04 DIFFUSER CHAMBERS

A. The diffuser chambers for each impeller shall be of 304 stainless steel. Further, they shall be fitted with Teflon™ impeller seal rings.

2.05 IMPELLERS

A. The impeller(s) shall be enclosed and consist of 304 stainless steel.

2.06 OPTIONS

A. Each SurePump shall come equipped with a quick disconnect system for ease of installation and service.

B. Each SurePump shall be equipped with a center-mounted EPG LevelMaster™ liquid level sensor system including a submersible level transmitter and chemically resistant lead wire.

2.07 MOTORS

A. The motor shall be a submersible, hermetically sealed Franklin motor in either Pollution Recovery or 316 Stainless Steel construction. The motor shall be designed for continuous duty, capable of sustaining up to 100 starts per day. The motor shall be connected to the pump via a motor adaptor and coupling in 304 stainless steel. Single phase motors shall have thermal protection in the motor windings to protect the windings from overload. The unit will restart automatically after the motor cools down. Three phase motors shall have thermal protection located in the control panel which is to be manually reset.

2.08 MOTOR LEAD WIRES

A. The lead wires shall be no-splice with waterproof “chemically resistant” (tefzel jacketed cable) insulation and be of the length specified above.

2.09 PUMP CONTROLS

A. Pump shall be supplied with an EPG PumpMaster Control Panel. Panel shall be UL listed, 230V, 1 phase, with a NEMA 4 enclosure, to operate the 0.5 HP submersible pump motor. Include a simulator, lift station shutdown with pass along and light.

B. Control panel shall also include pump run timer and pump cycle counter.

PART 3 - EXECUTION

A. Not Used.

END OF SECTION

SECTION 11317

SUBMERSIBLE PUMP STATION

PART 1 GENERAL

1.01 SUMMARY

A. Section includes explosion proof non-clog submersible water pumps, slide rails, and hoist with accessories for duplex pump station installation.

B. The Contractor shall furnish, install, test and place in satisfactory operation, as indicted on the Drawings and as specified, wet-pit submersible pumps complete with all appurtenances, accessories, and spare parts as required to produce a complete installation. Pump supplier shall be responsible for coordination of hatch location and pump removal and mounting accessories. Submersible pump supplier shall also be responsible for providing associated pump control panel and level sensing equipment as a single packaged system.

1.02 MEASUREMENT AND PAYMENT

A. Measurement and Payment shall be in accordance with Section 01275.

1.03 PERFORMANCE REQUIREMENTS

A. Pumps shall be designed for continuous service at the design conditions specified.

B. Capable of pumping contaminated groundwater (VOCs) with fairly high sodium chloride content.

C. Each pump station shall be provided with slide rails, cables, chains, and accessories to permit removal of pumps with maximum of 40 lbs. force.

1.04 SUBMITTALS

A. General:

1. Submit three (3) sets of shop drawings under a cover letter of a Professional Engineer in accordance with Section 01300.

2. Submit Manufacturer's Qualifications, Product Data, and Shop Drawings in sufficient detail to confirm compliance with requirements of this Section. Submit Product Data and Shop Drawings in one complete submittal package. Partial submittals are unacceptable.

3. Submittals shall be prepared by a single system supplier.

B. Shop Drawings:

1. Installation drawings and specifically prepared technical data for pump application.

2. Specially prepared wiring diagrams unless standard wiring diagrams are submitted with Product Data.

3. Control Panel wiring drawings.

4. Drawings indicating all weights and dimensions necessary for the installation of foundations, anchor bolts, valve connections, and hatches.

C. Product Data:

1. Catalog cuts and product specification for each product being provided.

2. Pump Performance Curve and Data:

a) Indicate Total Dynamic Head (TDH), capacity, horsepower demand, and pump efficiency curves for the various conditions under which the units are to operate along with descriptive data and specifications describing in detail the construction of the complete units..

3. Proposed coating system.

D. Operation and Maintenance (O&M) Manuals

1. Contractor shall submit specially prepared, specific O&M manuals for each pump station and piece of equipment installed.

2. List of recommended spare parts.

3. O&M manuals shall contain all as-built drawings and schematics.

E. Qualifications:

1. The manufacturer shall have a minimum of five installations of the exact combination of pump and motor model proposed to be furnished for this project. Installations must be in operation for a minimum of five years and shall list the pump model, motor model and horsepower, date of installation, duty point, and contact information including telephone number. A list of these installations shall be furnished to the Engineer with submittals.

1.05 QUALITY ASSURANCE

A. Pump Performance Curves:

1. Pump curves shall be submitted for each pump provided.

B. System Responsibility:

1. To ensure proper operation of system, pump supplier shall be responsible for providing associated control panel and control components required for coordination of lift station with air stripper and groundwater extraction pumps as outlined in the Specifications and Drawings.

1.06 PROJECT/SITE CONDITIONS

A. Contractor shall coordinate and verify piping layout in proposed lift station.

B. Contractor shall coordinate equipment anchoring requirements.

C. Contractor shall coordinate access hatch location.

D. Contractor shall coordinate with Engineer and air stripper and extraction pump manufacturers regarding control panel design and operation as part of the groundwater extraction and treatment system.

1.07 WARRANTY

A. The pumps/motors manufacturer shall be required to provide a five (5) year warranty for parts and labor for each pump provided on the project. Warranty coverage shall be a minimum of what is indicted in Table 1.07.

Table 1.07 Pump Warranty Coverage			
Description	**Months**		
	0-18	**19-36**	**40-60**
Submersible Lift Station Pumps	100%	50%	25%

PART 2 PRODUCTS

2.01 MANUFACTURER'S

A. ABS
B. Flygt
C. Wilo
D. HOMA
E. Or Approved Equal

2.02 PUMP PERFORMANCE

A. Pump performance requirements shall be as shown in Table 2.03.

TABLE 2.03 SUBMERSIBLE PUMP AND ELECTRIC MOTOR CHARACTERISTICS	
Pump Characteristics	
Location and Structure Number	Lift Station
Number of Pumps Installed	2
Material Being Pumped	Groundwater
Maximum Solids Size (in.)	0
Pump Speed (Maximum)	3450 RPM
Configuration	Submersible
Minimum Pump Capacity (GPM)	50 @ 73' TDH
Design Capacity (GPM)	90 @ 64' TDH
Maximum Pump Capacity (GPM)	183 @ 38' TDH
Nominal Motor Horsepower	3
Minimum Pump Efficiency	50%
Service Factor	1.15
Pump Discharge Diameter (in.)	3

2.03 PUMP CONSTRUCTION

A. The groundwater pumping units shall be vertical, non-clogging, centrifugal pumps with bottom inlet and side discharge (HOMA Model CH436/38/2/3, or equivalent). The pumps shall be direct driven by integral squirrel cage, explosion proof, electric induction motors. Each pump shall include motor, bearings, quick removal system, anchor bolts, and all accessories specified herein or as indicated on the Drawings. Major pump components including volute, seal plates, impeller and motor housing shall be constructed of stainless steel, with smooth surfaces free of irregularities.

B. Fasteners:

1. All exposed nuts, bolts and other fasteners shall be made of AISI Type 304 stainless steel.

C. Volute:

1. The volute shall be constructed of AISI 316 stainless steel capable of prolonged resistance to chemically aggressive liquids.

2. Suction and discharge flanges shall be 125# and meet ANSI Standard B16.1.

3. All mating surfaces requiring a watertight seal shall be machined and fitted with FPM (Viton) O-rings. Paper gaskets are not acceptable.

D. Impeller:

1. Pump impellers shall be mulit-vane non-clog type. The impeller vane shall be smooth, finished throughout, and shall be free from sharp edges.

2. Pump impellers shall be manufactured from AISI 316 stainless steel.

3. Dynamically balanced in accordance with ISO G6.3.

4. Key to shaft with stainless steel key and retained with Allen Head Bolt specifically designed to reduce friction in the suction eye of the impeller. The arrangement shall be such that the impeller cannot unscrew or be loosened by torque from either forward or reverse rotation. Designs based on threaded connection between pump shaft and impeller will not be considered.

E. Wear Rings/ Wear Plate:

1. Pumps shall be outfitted with wear rings or a wear plate as specified herein.

2. Wear Rings:

a. Wear rings shall be AISI 329 (1.4462) duplex stainless steel which are drive fitted to the suction eye of the impeller. The impeller wear ring shall be hardened to a Brinell hardness of 200-250.

b. The casing shall be provided with an AISI (1.4308) stainless steel wear ring which is drive fitted to the bottom suction inlet. The volute wear ring shall be hardened to a Brinell hardness of 275-325.

3. Wear Plate:

a. The wear plate shall be constructed from AISI 316 stainless steel.

b. The wear plate shall be designed with an inlet incorporating strategically placed cutting grooves and an outward spiral V-shaped groove on the side facing the impeller, to shred and force stringy solids outward from the impeller and through the pump discharge.

c. The wear plate shall be mounted to the volute with three stainless steel securing screws and three stainless steel adjusting screws to permit close tolerance adjustment between the wear plate and impeller for maximum pump efficiency.

d. The wear plate shall be factory mounted to the volute in a fixed position with metal to metal contact on machined surfaces to insure optimal clearance and efficiency at startup. Future adjustments shall be easily accomplished by removing three securing screws and rotating the plate 45 degrees to the adjustment position. Adjustment to allow for wear and restore peak pumping performance shall then be accomplished using standard tools, and without requiring disassembly of the pump.

e. The use of fixed or non-adjustable wear plates or rings, or systems that require disassembly of the pump or shimming of the impeller to facilitate adjustment shall not be considered equal.

f. The suction flange shall be integrated into the wear plate and its bolt holes shall be drilled and threaded to accept standard 6 inch ANSI class 125 flanged fittings.

F. Pump Shaft:

1. Pump and motor shaft shall be the same unit and shall be one piece construction without joints or stubs attached. All shafts shall be dynamically balanced and shall be amply sized to minimize shaft deflection. Construct shaft of Type 431 or AISI 420 (1.4021) stainless steel.

G. Bearings:

1. Permanently grease lubricated.

2. Upper bearing: Single row for radial thrust.

3. Lower bearing: Multiple row for axial thrust.

H. Mechanical Seal:

1. Each pump shall be provided with tandem mechanical seals or enclosed block mechanical seal with the seal housing and spring system constructed of AISI 316 stainless steel. The block seal housing shall be constructed such that it can be dismantled allowing the seal faces and springs to be renewed and the seal system to be put back into service.

2. Lower seal: Silicon Carbide/Silicon Carbide.

3. Upper seal: Silicon Carbide/Silicon Carbide.

4. A moisture sensor shall be furnished to sense seal failure for each pump. This sensor shall be wired to the Pump Control Panel and shall activate an alarm upon seal failure.

I. Lifting handle shall be constructed of stainless steel.

J. Discharge Connection:

1. Automatically and firmly connected to discharge piping.

2. Guided by two guide bars extending from top of station.

K. Suitable for Use in Class I, Division 1 Group C and D Rated Areas.

2.04 MOTOR

A. Provide 3450 RPM, 230 V, 60 cycle, squirrel cage, induction motor enclosed in water tight housing suitable for dry pit or wet pit installation under full load conditions. The motor shall be capable of installation in either the wet pit or dry pit without adding or removing any items to the motor's interior or exterior.

B. Horsepower and Service Factor: as shown in Table 1.

C. The motor shall be designed for continuous duty.

D. Motor shall be capable of operating completely submerged, partially submerged, or unsubmerged with adequate cooling means to prevent overheating.

E. NEMA Class H insulation and constructed to NEMA B design standards.

F. The motor cooling system shall be designed such that the motor can be operated continuously with approximately half of the motor not submerged in the surrounding media.

G. Design for continuous duty with a service factor of 1.15, non-overloading over the entire range of the impeller, and capable of up to 15 evenly spaced starts per hour.

H. Provide with thermal and moisture sensors. Thermal switches shall be furnished to monitor stator temperatures. The stator shall be equipped with three (3) thermal switches, one per winding phase. Thermal switches shall automatically de-energize the motor when its temperature exceeds a preset limit as recommended by the manufacturer.

I. Explosion proof, suitable for Class I, Division 1 Group C and D areas.

J. Locked Rotor Code Letter: H

K. The motor and pump shall be produced by the same manufacturer.

L. The pump manufacturer's nameplates shall be engraved, laser etched or stamped on stainless steel and fastened to the motor casing.

2.05 CABLE ENTRY SEAL

A. Single cylindrical elastomer grommet, flanked by washers, fitting against cable outside and compressed to seal penetration.

B. Assembly shall provide ease of changing cable when necessary using same entry seal.

C. Epoxy sealed housing with secondary pressure grommet for sealing and strain relief.

2.06 POWER AND CONTROL CABLES

A. Power and control cables shall be furnished in lengths to run un-spliced from the pump to the pump control panel. Cables shall terminate with conductor sleeves that bundle the entire ground of strands of each phase to improve termination at the pump control penal. The sleeves shall be provided to confirm that all strands of each conductor is terminated properly. Termination shall be coordinated with the connection to the pump control panel.

B. Cables shall be of the “NSSHOU” type and shall be approved by the MSHA for use in hazardous locations and shall conform to industry standards for loads, resistance under submersion against sewage, and be of stranded construction. The cables shall enter the pump through a heavy duty galvanized cast iron entry assembly which shall be provided with an external clamp assembly to protect against tension once secured providing a strain relief function as part of standard construction.

2.07 PUMP REMOVAL SYSTEM

A. Provide supplier’s recommended pump removal equipment.

B. Pumps shall be removable without the need to enter wet well.

C. Each pump shall be provided with a stainless steel lifting chain or stainless steel cable meeting AISI 316, rated for five (5) times the installed pump and coupling weight. The manufacturer shall provide information on recommended testing parameter that shall keep the lifting system capable of service for the life of the station. Recommendations shall be in written form and shall be discussed during startup training for the installation.

D. Provide 1” Schedule 40, 304L stainless steel guide rail(s) and a ductile iron discharge base at each pump. Guide rail(s) shall be supported by a AISI 304 upper guide rail bracket that shall be mounted in the opening of the access cover to support and guide the pump/motor into and out of the wet well.

E. Discharge Base Elbow: ASTM A48, Class 30B or higher cast iron discharge base elbow shall be provided to support the full weight of the submersible pump in the installation and provide a leak proof connection which is held in place by the combined weight of the cantilevered pump and motor. The discharge base elbow shall be provided with guide pipe retention lugs and 125 lb flange.

F. Provide intermediate guiderail support brackets as required by pump manufacturer at a minimum of every 10 feet.

G. All guide brackets, fasteners and anchoring devices shall be AISI 304 stainless steel.

2.08 HOIST

A. Provide pump suppliers recommended hoist, winch, stainless steel cables or chains and accessory pump removal equipment. Hoist shall be manufactured by Halliday Products, Series D, Thern, or approved equal.

B. Provide one (1) portable hoist with winch capable of lifting any of the pumps specified herein.

C. Provide hoist mounting bracket and pocket at each pumping station. Pocket shall accept mast from portable hoist. Coordinate type and mounting location with precast concrete supplier.

2.09 COATINGS

A. All non-plastic and non-stainless steel surfaces shall be prepared, primed, and final coated in accordance with manufacturer’s recommendations.

B. Final coat to be with an epoxy based system. Compatibility of coatings to be coordinated.

PART 3 EXECUTION

3.01 INSTALLATION

A. Install in accordance with manufacturer's written instructions and approved submittals.

3.02 FIELD QUALITY CONTROL

A. Manufacturer's Field Service:

1. Supplier's or manufacturer's representative for equipment specified herein shall be present at job site during start-up of each pump station for minimum 2 mandays indicated, travel time excluded, for assistance during pump installation, startup, and training of OWNER'S personnel. Include minimum of:

a. 1 Manday for Installation Services.
b. ½ Manday for Instructional and Startup Services.
c. ½ Manday for Post-Startup Services.

B. Field Testing:

1. After the installation of the pumps, controls and all appurtenances, and when construction of other units of the pump station will permit, each complete pumping unit will be subject to field tests as specified herein under actual operating conditions.

2. Field tests shall be performed by the Contractor under the direct supervision of a qualified factory trained technician, and in the presence of, and as directed by the Engineer. The Contractor shall provide, calibrate and install all temporary gauges and meters, shall make necessary tapped holes in pipes, and install all temporary piping and wiring required for field tests.

3. The field tests shall be used to determine the head, discharge flow and overall efficiency characteristics of each pumping unit and in addition shall demonstrate under all conditions the operation of each pump/unit.

4. Factory certified technicians shall be located within 200 miles of Henderson, Nevada, and capable of providing all mechanical and electrical service for the specified pumps. It is a requirement of this project that pump service technicians also be competent to provide routing and emergency service for the complete pump control panel and related control components supplied with the pumps.

3.03 SPARE PARTS

A. The pump/motor manufacturer shall furnish one (1) set of the following spare parts for each pump provided:

1. Mechanical seals or seal repair kit with all seal faces and o-rings.
2. Upper and lower bearings set
3. O-Ring Set

B. The pump/motor manufacturer shall furnish one (1) spare pump and motor for each new pump station under the project.

C. A written description of each spare part and the storage recommendation shall be provided as directed by the Engineer.

END OF SECTION

SECTION 13440

GENERAL PROVISIONS FOR INSTRUMENTATION AND CONTROLS

PART 1 GENERAL

1.01 SUMMARY

A. Section Includes:

1. General requirements for package and non-package Instrumentation and Control Systems unless otherwise specified in other sections.

1.02 DEFINITIONS

A. Selector Switch: When used under panel component description refers to maintained contact type switches. Loss and return of control power to circuit does not change control mode of requirements in switch position.

B. Push-button: When used under panel component description refers to momentary contact type switches which, unless specified otherwise, shall require electrical interlock. Loss of control power shall, unless specified otherwise, result in loss of electrical interlock and stoppage of previous mode of operations.

1.03 SYSTEM DESCRIPTION

A. Design Requirements:

1. Provide run/fail, alarm, and equipment status functions.

2. Unless otherwise specified, "run" signals shall be derived from motor starter normally open auxiliary contacts.

3. Unless otherwise specified, discrete input and output signals shall conform to:

a. Isolated unpowered (dry) contact closures.
b. Power contact from panel receiving signal or device receiving signal.

4. Unless otherwise specified, input and output analog signals shall conform to:

a. 4-20 mAdc.
b. For 2-wire transmitter, provide isolated type and power with 24 or 48 vdc at panel or device receiving signal.
c. Where isolation is required to interface with particular equipment furnished, provide necessary I/I converters.

5. For PLC based systems manual control devices, in panel or field, shall be independent from PLC to provide maintenance and redundancy function.

6. Panels, panel devices, and field devices shall meet or exceed NEMA requirements as follows.

a. NEMA 4 or 4X: Wet locations or outdoors.

1) Instrumentation and control panels shall be painted steel (NEMA 4) or 316 stainless steel (NEMA 4X).
2) Instruments and device enclosures shall be painted steel (NEMA 4) or 316 stainless steel, fiberglass, or ABS plastic (NEMA 4X).

7. Design Life: Design control system for min. 10 yr life at following temperatures:

a. Permit continuous operation with panel external ambient temperatures of up to +40°C (+104°F).
b. Outdoor Panels: Permit operation with panel external ambient temperatures of down to -29°C (-20°F).
c. Indoor Panels: Permit operation with panel external ambient temperatures of down to +8°C (+40°F).

8. When motor controller disconnecting means is off, deenergize associated equipment devices powered from panel.

9. Electrical wiring and controls shall conform to Division 16.

B. Identify equipment on panel or screens with indication below:

1. Red Light On: Equipment running.
2. White Light On: Equipment failure when called to run, but not running due to power failure, overload, breaker, disconnect, or remote switch call for equipment to stop.

a. Provide parallel "required" contact wired to panel for items such as pumps and valves.
b. Provide necessary relay logic and adjustable timers to sense discrepancy between "required" and "running" and activate respective "Run" and "Fail" light from these signals. Provide horn when specified.

3. Amber Light On: Indicate equipment status such as valve open or closed.
4. Green Light On: Equipment off.

1.04 SUBMITTALS

A. General:

1. Submit following information tabulated in booklet form for each piece of equipment or system furnished under this section.
2. Table of Contents of Submittals: Include for each booklet when more than 1 item of equipment is included in submittal:

a. ENGINEER'S instrument tag number.
b. Instrument manufacturer's model number.
c. Related piping, electrical, and dimension drawings.

B. Product Data:

1. Construction materials.
2. Ranges.
3. Output/Input signals.

4. Accessories.
5. Mounting location.
6. ENGINEER'S tag number on manufacturer's specifications sheets.
7. Interconnect reference for associated field and panel instruments.
8. Component specification sheets.

C. Shop Drawings:

1. Panel fabrication and dimension drawings, nameplate legends, ENGINEER'S tag numbers, and wiring and piping schematic drawings. Project specific drawings are required for each panel, typical are not acceptable.
2. Equipment dimension drawings.
3. Equipment terminal and piping connections.
4. Loop-by-loop system electrical schematic showing terminal-to-terminal interconnections between related panel and field instruments.
5. Front of panel layout.
6. PLC I/O module connection diagram for PLC based systems.
7. Ladder/logic system electrical schematic showing wiring of each component, including ranges and set points. Wiring and ladder diagram shall have reference numbers on every line for cross referencing. Each device on ladder shall be cross-referenced with line number as to wherever it is located.
8. Terminal to terminal interconnection drawings showing wiring for panel to panel/MCC and panel to field equipment.

D. Miscellaneous:

1. Certificate of UL or nationally recognized testing laboratory (NRTL) inspection and approval for each completely assembled panel prior to shipment to Project.
2. Include ENGINEER'S tag number when available on each submittal document or page wherever specific component appears.
3. Extra materials list.

E. Operation and Maintenance (O&M) Data:

1. Include O&M data for each panel and field device installed:

a. PLC ladder logic software (electronic and printed) including tags, comments, operational database values and passwords or pass codes.
b. Configured software on electronic media to install program on spare PLC processors and programmable controller.
c. Bill of materials.
d. Instruction Manual: Includes detailed operating sequence descriptions.
e. Maintenance Manual: Instructions for maintaining equipment to include calibrating, cleaning, and trouble shooting.
f. Front and rear panel layout drawings.
g. Name plate data.

1.05 QUALITY ASSURANCE

A. Standardization:

1. Drawings and Specifications are intended to provide overall system functions. Provide equipment necessary to provide complete and operable system.
2. CONTRACTOR is responsible for costs resulting from deviations from Contract Documents.

B. Items provided under sections referenced to this section shall be listed or labeled by UL or other Nationally Recognized Testing Laboratory (NRTL).

1. Term "NRTL" shall be as defined in OSHA Regulation 1910.7.
2. Terms "listed" and "labeled" shall be as defined in National Electrical Code, Article 100.

C. Regulatory Requirements:

1. National Electrical Code (NEC): Components and installation shall comply with National Fire Protection Association (NFPA) 70.

PART 2 PRODUCTS

2.01 Furnish equipment markers with ENGINEER'S equipment name and tag number.

2.02 No aluminum components shall be used in instrumentation and control equipment.

2.02 SOURCE QUALITY CONTROL

A. Perform UL inspection and certification for each completely assembled panel before shipment to Project site.

PART 3 EXECUTION

3.01 INSTALLATION

A. Install equipment in locations indicated on Drawings and in accordance with manufacturer's written instructions and approved submittals.

END OF SECTION

SECTION 13442

INSTRUMENT AND CONTROL PANEL CONSTRUCTION

PART 1 GENERAL

1.01 SUMMARY

A. Comply with Section 13440.

1.02 SUBMITTALS

A. Shop Drawings:

1. Wiring and wiring identification.
2. Terminal identification.

B. Submit in accordance with Section 01300.

1.03 MAINTENANCE

A. Extra Materials:

1. 5 fuses or 10%, whichever is greater, for each type of fuse.
2. 30% spare unwired terminals; to be shown on panel drawings.
3. 5 lamps or 10%, whichever is greater, for each type of lamp.
4. One intrinsically safe relay and intrinsically safe barrier for each type.
5. One control relay for each type.
6. One lightning and surge protection module for each type.
7. Spare PLC I/O points wired to terminal blocks.

B. Panel Space:

1. Include 10% contiguous usable rear of panel area for future components.

PART 2 PRODUCTS

2.01 CONTROL PANELS

A. Factory-fabricate, install instruments, plumb and wire.

B. Make external connections by way of numbered terminal blocks.

C. Separate electrical components from pneumatic components by metal barriers.

D. Conform to ISA standards.

E. Construct panels to external dimensions as specified, required, or shown. Component arrangement and wiring shall be consistent for like panels.

F. Fabrication:

1. Minimum Metal Thickness: 14 ga.

    a. Construct panels so no seams or bolt heads visible when viewed from front.
    b. Panel cutouts for instruments and other devices, such as lights and switches, shall be cut, punched or drilled, and smoothly finished with rounded edges.

2. Wherever practical, enclosures shall be manufacturer's standard product.
3. Size to adequately dissipate heat generated by equipment mounted in or on panel.
4. Equip panels mounted outside buildings with thermostatically controlled space heaters capable of maintaining internal temperature of 10°C, ±2°C, with 20 mph wind at ambient temperature of -30°C. Heaters shall operate on 120 vac, 60 Hz power.
5. Install rear of panel devices on subpanel.

G. Doors:

1. Provide front doors except on graphic sections and where otherwise specified.
2. Full height, fully gasketed access doors.
3. Provide with 3-point padlock locking latches.
4. Provide full length, continuous, piano type stainless steel hinges and pins.

H. Service Outlets:

1. Provide 20 amp, 120 v service outlet circuit fused at 5 amps within back-of-panel area. Fuse separate from control power.

I. Temperature Control:

1. For NEMA 4 or 4X Applications:

    a. Provide thermostatically controlled heat exchanger and circulation fans as required to limit internal temperature buildup within sealed enclosure. Internal panel temperature shall not exceed lowest or highest temperature rating of internal components.
    b. Heat exchanger shall be of air to air heat pipe type:

        1) Manufacturer: Noren Products Inc.
        2) Components located outside of control center enclosure shall be suitable for outdoor installation.
        3) Fans shall be waterproof and installed in a stainless steel or anodized aluminum enclosure.

    c. Install heat exchanger so that NEMA rating of enclosure is not compromised.
    d. For outdoor application sunshields may be used to limit internal panel temperature.

J. Fusing:

1. Maximum Fuse Size: 5 amp.
2. Group instruments after separate fusing with maximum of 10 instruments/fuse.
3. Fuse power supplies individually.
4. Where 5 amp capacity is exceeded by load requirements, provide additional fuses.
5. For field devices powered by panel, provide separate fuse for each output.

K. Wiring Terminals:

1. Mount and wire panel instruments and components to terminal blocks within panel so installation shall require only setting panel in place and making connections to field wiring and utilities.
2. Provide separately mounted terminal blocks in panel for connection of field wiring to panel.
3. Label with respective loop number as designated on Panel Ladder Logic Drawings or Loop Diagrams.

L. Intrinsically Safe Components:

1. Provide intrinsically safe shunt barriers and relays as necessary when field components are located in Class I Division 1 or Division 2 hazardous class field locations.

M. Lightning and Surge Protection:

1. Provide on instrumentation and control signals whose source or destination is outside building.
2. Provide on phone lines and copper data network connections located outside building.
3. Provide on 120 vac power feeds.

N. Wiring Identification:

1. Label panel wiring at each end of conductor with wire number as designated on Panel Ladder Logic Drawings or Loop Diagrams.
2. Labels shall be heat shrinkable vinyl sleeve with permanent embossed letters. Emboss label characters on single sleeve. Heat shrink sleeves on conductors at terminal ends.
3. Conductors Color Codes:

   a. 120 vac power wiring, line (phase "A"): Black.
   b. 120 vac power wiring, neutral/common: White.
   c. 120 vac power wiring, ground: Green.
   d. 120 vac control wiring, internal power source: Red.
   e. 120 vac control wiring, external power source: Yellow.
   f. 24 vdc control wiring, internal or external power source: Light Blue.
   g. 4-20 mAdc signal wiring, positive lead: Black.
   h. 4-20 mAdc signal wiring, negative lead: White or Red.
   i. Data highway cable, signal leads: Manufacturer's standard.

O. Panel Drawing Data Pocket:

1. Mount inside without penetrating panel.
2. Size for holding wiring diagrams.
3. Construct from thermal plastic or metal.
4. Include wiring diagrams.

P. Three Phase and Motor Control Panel:

1. Through door main disconnect or circuit breaker.
2. Control transformer with primary and secondary fuses or circuit breakers.

2.02 ADDITIONAL REQUIREMENTS FOR FREE-STANDING PANEL CONSTRUCTION

A. Fabrication:

1. Fabricate each panel from sheet steel with 1 piece, 10 ga steel front and 12 ga steel sides, back, and top.
2. Provide steel angle stiffeners on back of panel face to prevent panel deflection under instrument loading or operation.
3. Provide internal structural steel framework for instrument support and panel bracing. Internal framework shall permit lifting of panel without racking or distortion.
4. Provide removable lifting rings designed to facilitate rigging and lifting of panel during installation. Provide plugs to fill lifting ring holes after installation to complete and lifting rings have been removed.
5. Where 2 or more sections of panel are mounted adjacent to one another, bolt together with front faces parallel.

B. Doors:

1. Rear access doors shall extend no further than 24 in. beyond panel when opened to 90° position.
2. For panels with no front doors or rear access, provide 36 in. deep panel with side access doors on each side.

C. Lights:

1. Provide separately fused and switched 100 watt incandescent or equivalent cold start fluorescent back-of-panel lights.
2. Provide one light for every 4 ft or less of panel width.
3. Mount inside and in top of back-of-panel area.

D. Service Outlets:

1. Space evenly along back of panel.

   a. Panels 4 ft or less: 1 outlet.
   b. Panels greater than 4 ft: 2 outlets.
   c. Panels greater than 8 ft: 3 outlets.
   d. Panels greater than 12 ft: 4 outlets.

E. Instrument Location:

1. Locate instruments designated for back of panel mounting to allow for maintenance and adjustment.
2. Front of panel instrument mounting height shall not exceed 6 ft 6 in., minimum height shall be 4 ft-0 in.

2.03 PANEL FINISH

A. Panels shall be NEMA 4 painted steel or NEMA 4X stainless steel.

2.04 NAMEPLATES

A. Provide nameplates for I&C panels and each front-of-panel instrument and device with designations as shown on Drawings and as listed in Specifications.

B. Panel Designation: Engraved with ENGINEER'S panel tag number and description with 1/2 in. high characters.

C. Application/Function Nameplate: Locate 3/16 in. characters above or near panel mounted instrument or device consisting of descriptive phrase using nomenclature as listed in Specifications (when available).

D. Laminated white plastic inscribed with black characters.

E. Tag Number: Include ENGINEER'S tag number as shown on P&ID's and in Specifications on each nameplate.

F. Provide aluminum decal with black 3/16 in. characters identifying tag number or device designation. Locate decal on instrument or device or above instrument or device on panel.

G. Secure front-of-panel and front-of-instrument nameplate with drive screws or self-tapping fasteners.

2.05 SOURCE QUALITY CONTROL

A. Test wiring and plumbing prior to shipment.

1. Test internal wiring and components to ensure panel is operational prior to shipment.
2. When panels are interwired, interconnect panels at factory and test functionality of system.
3. Simulate field component and instrument inputs at panel terminals. Test panel outputs with suitable test instruments.
4. Pressure test internal piping system and components for leaks and repair before shipping.

PART 3 EXECUTION

3.01 INSTALLATION

A. Install panels in locations indicated on Drawings and in accordance with manufacturer's written instructions and approved submittals.

B. Coordinate design and installation of equipment control panels with primary system PLC for timing and functionality of the system.

END OF SECTION

SECTION 13453

PANEL AND FIELD DEVICES

PART 1 GENERAL

1.01 SUMMARY

A. Comply with Section 13440.

PART 2 PRODUCTS

2.01 PUSH-BUTTON/SELECTOR SWITCH CONTROL UNITS AND PILOT LIGHTS

A. Manufacturers:

1. Square D.
2. Cutler-Hammer.
3. Allen Bradley.
4. Or approved equal.

B. Construction:

1. Heavy duty.
2. Oil tight, watertight.
3. Base mounting.
4. Flush panel mounting.
5. Size to mount in 30.5 mm opening without adapter. Smaller units are not acceptable.

C. Pushbuttons:

1. Flush head unless specified elsewhere.
2. Contact Blocks:

   a. Double break silver contacts.
   b. ac Ratings: 7,200 va make, 720 va break.
   c. Single pole, double throw or double pole, single throw.
   d. Up to 6 tandem blocks.

3. Momentary contact unless specified elsewhere.
4. Non-illuminated.
5. Padlock attachments where required.
6. Legend plates as required for type of operation or as specified elsewhere.

D. Remote Lock-out:

1. Jumbo red mushroom head.
2. Contact Blocks:

   a. Double break silver contacts.
   b. ac Ratings: 7,200 va make, 720 va break.

c. Single pole, double throw or double pole, single throw.
d. Up to 2 tandem blocks.

3. Push/Pull.
4. Maintained contact.
5. Non-illuminated.
6. Padlock attachments constructed of metal. Plastic material is not acceptable.
7. Legend Plates:

a. Extra large.
b. Red.
c. Emergency.

E. Selector Switches:

1. Maintained position unless specified elsewhere.
2. Contact Blocks:

a. Double break silver contacts.
b. ac Ratings: 7,200 va make, 720 va break.
c. Single pole, double throw or double pole, single throw.
d. Up to 6 tandem blocks.

3. Operators:

a. Number of positions as specified elsewhere.
b. Standard knob type unless specified elsewhere.

4. Legend plates as required for type of operation or specified elsewhere.

F. Pilot Lights:

1. Transformer type.
2. Bayonet, 6 to 8 v bulb.
3. Colored lenses as specified elsewhere.
4. Interchangeable lenses.
5. Transformer rated for 120 v, 60 Hz.
6. Push to test.
7. Legend plates as required for type of operation or specified elsewhere.

G. Nameplates:

1. General.

a. Engraved laminated plastic.
b. Letters 3/16 in. high.
c. Black letters on white background.
d. Identify per equipment controlled.

2.02 MOTOR STARTER CONTROL RELAYS

A. Manufacturers:

1. Square D.
2. Cutler-Hammer.
3. Or approved equal.

B. Construction:

1. Industrial type.
2. 600 v rated.
3. ac operation.
4. Pressure wire connectors.

C. Operating Data:

1. Pickup Time: 11 ms maximum.
2. Dropout Time: 6 ms maximum.

D. Coil:

1. Molded construction.
2. 120 vac, 60 Hz or 24 vdc
3. Continuous rated.
4. 155 va inrush, maximum.
5. 22 va sealed, maximum.
6. Suppress coil transients to 300 v or less.

E. Contacts:

1. Double break.
2. Silver alloy.
3. Convertible.
4. Color coded to indicate status.
5. Pilot duty.

F. Track mounting capability.

G. Accessories:

1. Add-on pole attachment.

   a. 4 NO and 4 NC contacts.
   b. Add-on to 0 to 4-pole relay.

2. Latch attachment.

2.03 GENERAL PURPOSE CONTROL RELAYS

A. Manufacturers:

1. Potter and Brumfield, KU Series.
2. Struthers Dunn.

3. Or approved equal.

B. Operating Data:

1. Pickup Time: 13 ms maximum.
2. Dropout Time: 10 ms maximum.
3. Operating Temperature: -45°C to 70°C.

C. ac Coil:

1. 120 or 240 vac.
2. Continuous rated.
3. 3.5 va inrush.
4. 1.2 va sealed.
5. 50 to 60 Hz.
6. Minimum Dropout Voltage: 10% of coil rated voltage.

D. dc Coil:

1. 24 or 120 vdc.
2. Continuous rated.
3. Minimum Coil Resistance:

a. 24 vdc: 450 ohm.
b. 100 vdc: 9,000 ohm.

E. Contacts:

1. Silver cadmium oxide.
2. Gold flashed fine silver, gold diffused for 1 amp or less resistive loads.
3. 4 Form C.
4. 120 vac.
5. 10 amp make, 15 amp break, (inductive).

F. Rated at 10 million operations.

G. Plug-in sockets.

H. Enclosed and protected by polycarbonate cover.

I. Provide relay retaining clips.

2.04 FLOAT SWITCHES

A. Manufacturers:

1. Consolidated 9GEF.
2. Anchor Scientific GP.
3. Or approved equal.

B. Float: 316 stainless steel.

C. Provide sufficient length of nitrile PVC jacketed cable.

D. Mounting Hardware: 316 stainless steel.

E. Switch: Non-Mercury tilt type switch with minimum rating of 10 million cycles.

2.05 TERMINAL BLOCKS FOR CONTROL WIRING

A. Manufacturers:

1. Allen Bradley, Bulletin 1492.
2. Phoenix Contact. UK-5N.

B. General:

1. 600 v rating.
2. Marker labels on each terminal.
3. Clip-mount on DIN rails.
4. Insulating end caps to support each terminal block assembly.
5. Touchsafe terminal block and accessories.
6. Connection: Captive screw and pressure plate. Connection shall not cause deformation of wire.
7. Contact material and surface: Nickel or tin plated copper alloy. Do not use ferrous metals.

C. Switched Knife Disconnect (when specified):

1. Non-fused.
2. Single-pull, single throw (SPST).
3. Hinged disconnect lever.

D. Fused Indicating (when specified):

1. LED blown fuse indicating light.
2. Hinged disconnect lever.
3. Size fuse for load.
4. 15 amp capacity fuse holder.

2.06 EXTERIOR MOUNTED ALARM LIGHT

A. Manufacturers:

1. Crouse Hinds, Model VXHF25GP.
2. Or approved equal.

B. Power: 120 vac, 150w.

C. Incandescent, vapor tight enclosed and gasketed.

D. Suitable for use in wet location.

E. Aluminum body.

F. Shatter-proof glass globe with aluminum guard, red unless otherwise specified.

G. 3/4 in. conduit connection.

PART 3 EXECUTION

3.01 INSTALLATION

A. Install in accordance with manufacturer's written instructions, local codes, applicable requirements of NEC, NECA "Standard of Installation," and recognized industry practices.

B. Control Relays:

1. Provide control relays for general purpose logic circuits.
2. Provide motor starter control relays when load exceeds rating of general purpose control relays.

END OF SECTION

SECTION 15079L

HIGH DENSITY POLYETHYLENE PIPE

PART 1 - GENERAL

1.01 WORK INCLUDES

A. Installation of the HDPE gravity flow and forcemain piping for the groundwater extraction and treatment system.

1.02 SUBMITTALS

A. Product Data:

1. Manufacturing test specification data listing resin type, cell classification, stock density, melt flow, flexural modulus, tensile strength, and coloration.

2. Include test results with shipment of materials, with two additional copies of test results furnished to ENGINEER.

3. Pipe Dimensions:

a. Average outside diameter.

b. Average inside diameter.

c. Minimum and average wall thickness.

1.03 QUALITY ASSURANCE

A. Comply with appropriate codes and standards of following organizations for handling, heat fusion, and underground installation of low pressure polyethylene pipe:

1. American Gas Association (AGA).

2. Plastic Pipe Institute (PPI).

1.04 DELIVERY, STORAGE, AND HANDLING

A. Pipe Storage:

1. Store or stack pipe to prevent damage from marring, crushing or puncture. Limit maximum stacking height to 6 feet.

2. Store in accordance with manufacturer's recommendations.

B. Pipe Handling:

1. Protect pipe from excessive heat or harmful chemicals.

PART 2 - PRODUCTS

2.01 MATERIALS

A. Manufacturers:

1. Phillips Driscopipe, Inc., Richardson, Texas.

2. Plexco, Amsted Industries, Franklin Park, Illinois.

3. Poly Pipe Industries, Gainesville, Texas.

4. Or approved pipe.

B. Physical Properties of Pipe Resin:

1. Density: ASTM D 1505, not less than 0.941 - 0.955 g/cc.

2. Melt Flow: ASTM D 1238 - Condition E, not greater than 0.15.

3. Flexural Modulus: ASTM D 790, 110,000 to less than 160,000 psi.

4. Tensile Strength at Yield: ASTM D 638, 3,000 to less than 3,500 psi.

5. Environmental Stress Crack Resistance (ESCR): ASTM D 1693 - Condition C, shall be in excess of 5,000 hrs with zero failures.

6. Hydrostatic Design Basis: ASTM D 2837, 1,600 psi at 23°C.

C. High performance, high molecular weight, high density polyethylene pipe (Type 3408 resin).

D. ASTM D 1248 (Type III, Class C, Category 5, P34).

E. ASTM D 3350, minimum cell classification value 345434C.

F. Marking (Intervals of 5 feet or less):

1. Manufacturer's name or trademark.

2. Nominal pipe size.

3. Type of plastic pipe (i.e., PE 3408).

4. Standard dimension ratio.

5. ASTM D 2513.

6. Extrusion date, period of manufacture or lot, or batch number.

G. Dimensions:

1. Conform to standard dimensions and tolerances of ASTM D 2513.

2.02 FITTINGS

A. Fittings from polyethylene compound having cell classification equal to or exceeding compound used in pipe to ensure compatibility of polyethylene resins.

B. Provide molded fittings rather than factory fabricated fittings in available diameters.

C. Be of same manufacture as pipe being provided. ENGINEER may allow substitution for approved material with use of flanged joint sections.

D. Flange Joints:

1. 150-lb. convoluted Epoxy coated carbon steel or stainless steel backup flanges as recommended by manufacturer.

2. Stainless steel nuts and bolts.

3. Flanges and bolt patterns consistent with ANSI B16.5, AWWA C207, ASTM A536, and as recommended by manufacturer.

E. Fitting dimensions shall conform to standard dimensions and tolerances, ASTM D 3261.

F. Markings, each fitting:

1. Manufacturer's name or trademark.

2. Nominal size.

3. Type of plastic pipe (i.e., PE 3408).

4. Standard dimension

5. ASTM D 2513.

6. Extrusion date, lot number or batch number.

2.03 SOURCE QUALITY CONTROL

A. If manufacturer's test data inadequate or unavailable, OWNER reserves right to reject or require additional tests to satisfy material requirements. Costs of these tests shall be paid for by CONTRACTOR.

PART 3 - EXECUTION

3.01 INSTALLATION

A. Heat Fusion of Pipe:

1. Weld in accordance with manufacturer's recommendation for butt fusion methods. Provide qualified fusion operators.

2. Butt fusion equipment for joining procedures shall be capable of meeting conditions recommended by pipe manufacturer including, but not limited to, temperature requirements, alignment, and fusion pressures.

3. For cleaning pipe ends, solutions such as detergents and solvents, when required, shall be used in accordance with manufacturer's recommendations.

4. Do not bend pipe to greater degree than minimum radius recommended by manufacturer for type and grade.

5. Do not subject pipe to strains that will overstress or buckle piping or impose excessive stress on joints.

6. Branch saddle fusions shall be joined in accordance with manufacturer's recommendations and procedures. Branch saddle fusion equipment shall be of size to facilitate saddle fusion within trench.

7. Before butt fusing pipe, inspect each length for presence of dirt, sand, mud, shavings, and other debris or animals. Remove debris from pipe.

8. After fusion welding of the 6-inch and 18-inch-diameter pipe, remove the bead of HDPE created by the fusion welding process to create a smooth interior joint or bevel the inside edge of the welded pipes to eliminate the bead and maintain a smooth interior joint.

9. Cover at end of each working day open ends of fused pipe. Cap to prevent entry by animals or debris.

10. Use compatible fusion techniques when polyethylene of different melt indexes are fused together. Refer to manufacturer's specifications for compatible fusion.

B. Flange Jointing:

1. Use on flanged pipe connection sections.

2. Connect slip-on epoxy-coated carbon steel or stainless steel backup flanges with nuts and bolts. Convoluted ductile iron backup rings may be substituted for joining HDPE pipes per manufacturer's recommendations.

3. Butt fuse fabricated flange adapters to pipe.

4. Observe following precautions in connection of flange joints.

a. Align flanges or flange/valve connections to provide tight seal. Use nitrile-butadiene (hycar) gaskets. Gaskets are required for flange/valve connections.

b. Place U.S. Standard round washers as may be required on some flanges in accordance with manufacturer's recommendations. Bolts shall be lubricated in accordance with manufacturer's recommendations.

c. Tighten flange bolts in sequence and accordance with manufacturer's recommendations. Do not over-torque bolts.

5. Pull bolt down by degrees to uniform torque in accordance with manufacturer's recommendations.

6. Protect below grade bolts with Tapecoat mastic and tape.

C. Pipe Placement:

1. Grade control equipment shall maintain design grades and slopes during installation of pipe.

2. Dewatering: Remove standing water in trench before pipe installation.

3. Unless otherwise specifically stated, install pipe in accordance with manufacturer's recommendations.

4. Maximum lengths of fused pipe to be handled as one section shall be placed according to manufacturer's recommendations as to pipe size, pipe SDR, and topography so as not to cause excessive gouging or surface abrasion; but not to exceed 400 feet.

5. Prevent migration of dirt and debris through perforations during placement. Remove dirt or debris from pipe before backfilling.

6. Notify ENGINEER prior to installing pipe into trench and allow time for ENGINEER'S inspection. Correct irregularities found during inspection.

7. Allow pipe sufficient time to adjust to trench temperature prior to testing, segment tie-ins or backfilling activity.

8. Place in trench by allowing minimum 12 inch/100 feet for thermal contraction and expansion.

D. Perforations:

1. Provide pipe perforations in accordance with DRAWINGS. Use standard jig or frame to produce even, uniform perforations.

2. Remove cuttings from pipe before installations.

E. Structure Penetrations:

1. Provide manufactured or fabricated fittings for wall penetrations which have been designed for use with cast-in-place, pre-cast, or modular mechanical seal.

3.02 FIELD QUALITY CONTROL

A. Pipe may be rejected for failure to conform to Specifications or following.

1. Fractures or cracks passing through pipe wall. Pipes within one shipment shall be rejected if defects exist in more than 5% of shipment or delivery.

2. Cracks sufficient to impair strength, durability or serviceability of pipe.

3. Defects indicating improper proportioning, mixing, and molding.

4. Damaged ends, where such damage prevents making satisfactory joint.

B. Acceptance of fittings, stubs or other specially fabricated pipe sections shall be based on visual inspection at job site and documentation of conformance to these Specifications.

C. Pipe Testing: All underground transfer pipes shall be pressure tested to 10 psi for one hour with a maximum pressure loss of 10%. Does not apply to perforated pipe.

END OF SECTION

TIMET SITE REMEDIATION
GROUNDWATER EXTRACTION, TREATMENT AND INFILTRATION SYSTEM
TITANIUM METALS CORPORATION

181 NORTH WATER STREET
BLACK MOUNTAIN INDUSTRIAL CENTER
HENDERSON, NEVADA

GEI PROJECT NO.: 1323080

STATE MAP
NOT TO SCALE

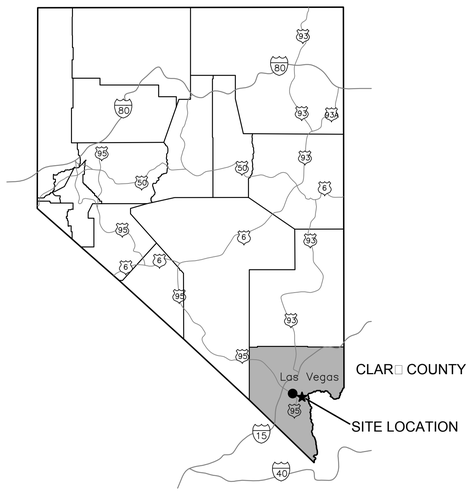

SITE VICINITY MAP
NOT TO SCALE

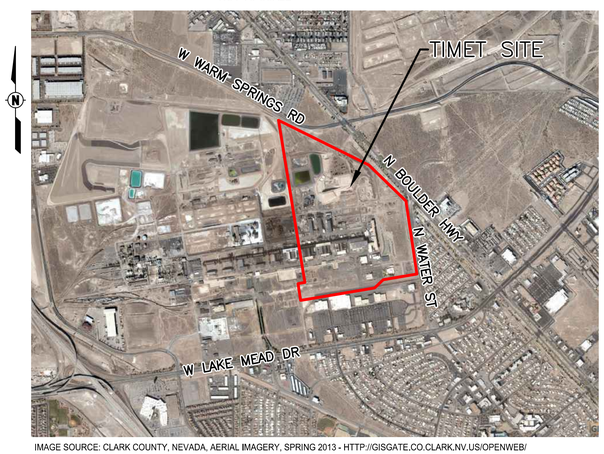

IMAGE SOURCE: CLARK COUNTY, NEVADA, AERIAL IMAGERY, SPRING 2013 - HTTP://GISGATE.CO.CLARK.NV.US/OPENWEB/

DRAWING INDE□

SHEET	TITLE
C-1	TITLE SHEET
C-2	GENERAL NOTES, ABBREVIATIONS AND LEGEND
C-3	EXISTING CONDITIONS
C-4	CONSTRUCTION PLAN
C-5	EXTRACTION SYSTEM PLAN AND PROFILE (1 OF 5)
C-6	EXTRACTION SYSTEM PLAN AND PROFILE (2 OF 5)
C-7	EXTRACTION SYSTEM PLAN AND PROFILE (3 OF 5)
C-8	EXTRACTION SYSTEM PLAN AND PROFILE (4 OF 5)
C-9	EXTRACTION SYSTEM PLAN AND PROFILE (5 OF 5)
C-10	INFILTRATION SYSTEM PLAN AND PROFILE (1 OF 3)
C-11	INFILTRATION SYSTEM PLAN AND PROFILE (2 OF 3)
C-12	INFILTRATION SYSTEM PLAN AND PROFILE (3 OF 3)
C-13	CROSS-SECTIONS
C-14	LIFT STATION AND TRAY AIR STRIPPER DETAILS
C-15	TRENCH AND PIPING DETAILS
C-16	TRENCH AND PIPING DETAILS
E3-001	ELECTRICAL PANEL SCHEDULES
E3-002	ELECTRICAL PANEL SCHEDULES
E4-001	ELECTRICAL PLAN VIEW
E4-002	ELECTRICAL PLAN VIEW
PFD-002	PROCESS AND INSTRUMENTATION DIAGRAM
S-01	AIR STRIPPER PAD NOTES, LEGENDS AND ABBREVIATIONS
S-02	AIR STRIPPER AND LIFT STATION PAD PLAN DETAILS
S-03	CONCRETE PAD DETAILS

PREPARED FOR:

TITANIUM METALS CORPORATION

PREPARED BY:

GEI Consultants
31□9 Voyager Drive
Green Bay, Wisconsin □□311
920-□□□-□200
WWW.GEICONSULTANTS.COM

APPROVED BY

NV ENERGY

N/A
NV ENERGY — DATE

NV ENERGY AC□NOWLEDGES THAT WE HAVE RECEIVED YOUR PLANS AND WILL PROVIDE SERVICE TO ALL ELECTRICAL NEEDS ASSOCIATED WITH THIS PROJECT. NV ENERGY RESERVES THE RIGHT TO ADDRESS ANY E□ISTING OR FUTURE CONFLICTS ONCE THE FINAL DESIGN IS COMPLETED. THE NEW SERVICE AND THE RESOLUTION OF ANY CONFLICTS WILL BE ACCOMPLISHED PURSUANT TO THE NEVADA PUBLIC UTILITY COMMISSION'S RULES AND REGULATIONS.

CENTURYLIN□

N/A
CENTURYLIN□ — DATE

THE AFFI□ED CENTURYLIN□ APPROVAL DOES NOT ASSUME OR GUARANTEE LIABILITY FOR □NOWN OR UN□NOWN CONFLICTS WITH E□ISTING OR PROPOSED IMPROVEMENTS. RESOLUTION OF ANY CONFLICT WILL BE ACCOMPLISHED PURSUANT TO LOCAL ORDINANCES, NEVADA REVISED STATUES AND/OR PUBLIC UTILITY COMMISSION RULES AND REGULATIONS.

SOUTHWEST GAS

N/A
SOUTHWEST GAS CORPORATION — DATE

CO□ COMMUNICATIONS

N/A
CO□ COMMUNICATIONS LAS VEGAS, INC. — DATE

CLAR□ COUNTY WATER RECLAMATION DISTRICT

CLAR□ COUNTY WATER RECLAMATION DISTRICT (CCWRD)
HTE NUMBER IS □N/A□□□□□□□

SIGNATURE ON THESE PLANS SHALL NOT BE CONSTRUED TO BE A PERMIT FOR AN APPROVAL OF ANY VIOLATION OF CLAR□ COUNTY WATER RECLAMATION DISTRICT RULES, REGULATIONS, OR DESIGN AND CONSTRUCTION STANDARDS. THE APPROVAL OF THESE DRAWINGS DOES NOT GUARANTEE CAPACITY IN THE DISTRICT'S COLLECTION OR TREATMENT SYSTEM.

N/A
CLAR□ COUNTY RECLAMATION DISTRICT — DATE

CLAR□ COUNTY FIRE DEPARTMENT

CLAR□ COUNTY FIRE DEPARTMENT — DATE

CLAR□ COUNTY DEPARTMENT OF PUBLIC WOR□S - DEVELOPMENT REVIEW

ACCEPTANCE OF PLANS FOR FILING:

BY: DATE

ACCEPTANCE OF THESE PLANS FOR FILING SHALL NOT BE CONSTRUED TO BE A PERMIT FOR, OR AN APPROVAL OF, ANY VIOLATION OF ANY OF THE PROVISIONS OF THE STATE OR COUNTY LAWS AND/OR SPECIFICATIONS. CLAR□ COUNTY SHALL BE HELD FREE FROM DAMAGES WHICH MAY RESULT FROM THE CONSTRUCTION OF THE IMPROVEMENTS FROM THE ENGINEERING DESIGN DEPICTED HEREIN.
NOTE: POWER POLES AND/OR OTHER E□ISTING FACILITIES NOT IN PROPER LOCATION, BASED ON PROPOSED IMPROVEMENTS SHOWN HEREON WILL BE RELOCATED AT NO E□PENSE TO CLAR□ COUNTY.

NO.	DATE	ISSUE/REVISION	APP
2	1□□/1□	ISSUED FOR CONSTRUCTION	GAO
1	12/1□/13	REVISED	GAO
0	11/21/13	ISSUED FOR BIDDING	MGR

DWG. NO. C-1

SHEET NO. 1 of 2□

J:\Landfills\Timet\Recharge□Trenches\E□TRACTION□SYSTEM□REV-2\C1□Rev2□Title

BASIS OF BEARING

THE BASIS OF BEARINGS FOR THIS PROJECT IS GRID NORTH AS DEFINED BY THE NEVADA COORDINATE SYSTEM OF 19□3 □NCS□3□, EAST □ONE, □2□01□

BENCHMAR□

CITY OF HENDERSON BENCHMAR□ NO. □2 □REVISION DATE 200□□-
BOLT AND WASHER IN THE TOP OF CURB AT THE NORTHWEST
CORNER OF LA□E MEAD DRIVE AND ATLANTIC AVENUE.
ELEVATION □1□□□.9□FT □NAVD□□□
□ □□□.□□9 M □NAVD□□□

FLOOD □ONE NOTE

THE SITE IS LOCATED WITHIN A FLOOD □ONE □ □UNSHADED□AND FLOOD □ONE A, PER FEMA FLOOD INSURANCE RATE MAP □FIRM□PANEL 32003C2□1□F, DATED NOVEMBER 1□, 2011. FLOOD □ONE □ □UNSHADED□ IS DESCRIBED AS AREAS DETERMINED TO BE OUTSIDE THE 0.2□ ANNUAL CHANCE FLOODPLAIN. FLOOD □ONE A IS DESCRIBED AS AREAS DETERMINED TO BE WITHIN THE 1□ ANNUAL CHANCE FLOODPLAIN WITH NO BASE FLOOD ELEVATIONS DETERMINED.

CLAR□ COUNTY DEPARTMENT OF PUBLIC WOR□S-DEVELOPMENT REVIEW DIVISION CONSTRUCTION NOTES

1. INSPECTIONS ARE RE□UIRED. CALL 2□ HOURS IN ADVANCE TO SCHEDULE AT □02□□□□-□□10. PERMIT, APPROVED PLANS, AND BARRICADE PLANS FOR THIS WOR□ MUST BE ON THE JOB SITE AT ALL TIMES.
2. E□ACT LOCATION OF ALL SAW-CUT LINES SHALL BE DETERMINED IN THE FIELD BY A CLAR□ COUNTY INSPECTOR.
3. CURB AND GUTTER WITH A GRADE OF LESS THAN □10 OF ONE PERCENT SHALL BE CONSTRUCTED BY FORMING. EACH JOINT SHALL BE CHEC□ED FOR GRADE PRIOR TO CONSTRUCTION AND WATER TESTED AS SOON AS POSSIBLE AFTER CONSTRUCTION.
4. FINAL ASPHALTIC CONCRETE (AC) PAVEMENT SURFACES SHALL BE ON-HALF (1/2") INCH ABOVE THE LIP OF THE GUTTER □INCLUDING OPEN GRADE□.
5. ALL OFF-SITE IMPROVEMENT CONSTRUCTION SHALL CONFORM TO THE UNIFORM STANDARD SPECIFICATIONS AND STANDARD DRAWINGS CLAR□ COUNTY AREA NEVADA AND CLAR□ COUNTY SUPPLEMENT TO UNIFORM STANDARD DRAWINGS AND SPECIFICATIONS, LATEST REVISION.
6. PRIVATE STREETS, CURBS, GUTTERS, AND VALLEY GUTTERS REFLECTED ON THESE PLANS ARE TO BE INSPECTED BY A CLAR□ COUNTY INSPECTOR.
7. WHEEL CHAIR RAMPS SHALL BE CONSTRUCTED IN EACH □UADRANT OF AN INTERCEPTION PER STANDARD DRAWING 23□. E□ACT LOCATION OF RAMPS SHALL BE DETERMINED IN THE FIELD BY CLAR□ COUNTY PUBLIC WOR□S INSPECTOR.
8. PROPER SIGNS, BARRIERS, BARRICADES AND LIGHTS SHALL BE PLACED AND MAINTAINED IN ACCORDANCE WITH THE LATEST MANUAL OF UNIFORM TRAFFIC CONTROL DEVICES FOR STREETS AND HIGHWAYS. TRAFFIC, SCHOOL, OR STREET SIGNS OF ANY □IND ARE NOT TO BE MOVED FOR ANY REASON WITHOUT FIRST COORDINATING WITH THE DEPARTMENT OF PUBLIC WOR□S INSPECTIONS AT □02□□□□-□□10.
9. THIS PLAN DOES NOT AUTHORI□E CLOSURE OF ANY ROAD OR STREET.
10. NO OPEN TRENCH SHALL BE ALLOWED ACROSS ANY STREET OR WITHIN TEN □10□ FEET OF ANY TRAVEL-WAY, E□CEPT WHEN WOR□ IS IN ACTUAL PROGRESS. AREAS COVERED BY ACCEPTABLE STEEL PLATE ARE NOT TO BE CONSTRUED AS A TRENCH. NO OPEN TRENCH IS PERMITTED IN E□CESS OF□ □00 FEET OR LENGTH NECESSARY TO ACCOMMODATE PIPE INSTALLATION IN A SINGLE DAY, WHICHEVER IS GREATER. ALL TRENCH CROSSINGS AND BAC□FILL SHALL MEET THE STANDARD SPECIFICATION UNLESS OTHERWISE STATED.
11. A TEMPORARY PATCH IS TO BE IN PLACE AT THE END OF EACH WOR□ DAY WHERE THE BAC□FILL IN THE TRENCH HAS BEEN COMPLETED AND PRIOR TO OPENING THE WOR□ AREA BAC□□TO TRAFFIC AND IS TO BE MAINTAINED BY THE PERMITTEE. A PERMANENT PATCH IS TO BE IN PLACE WITHIN THIRTY □30□ DAYS AFTER THE INSTALLATION OF THE TEMPORARY PATCH.
12. COMPACTION TESTS ARE RE□UIRED.

STORMWATER RUNOFF MANAGEMENT

RE□UIRED FOR ALL SITES GREATER THAN 1 ACRE □□3,□□□0 S□.FT.□□

1. THE OWNER, SITE DEVELOPER, CONTRACTOR, AND□OR THEIR AUTHORI□ED AGENTS SHALL EACH DAY REMOVE ALL SEDIMENT, MUD, CONSTRUCTION DEBRIS, OR OTHER POTENTIAL POLLUTANTS THAT MAY HAVE BEEN DISCHARGED TO, OR ACCUMULATED IN, THE PUBLIC RIGHTS OF WAY OF CLAR□ COUNTY AS A RESULT OF CONSTRUCTION ACTIVITIES ASSOCIATED WITH THIS SITE DEVELOPMENT OR CONSTRUCTION PROJECT. SUCH MATERIALS SHALL BE PREVENTED FROM ENTERING THE STORM SEWER SYSTEM.
2. ADDITIONAL CONSTRUCTION SITE DISCHARGE BEST MANAGEMENT PRACTICES MAY BE RE□UIRED OF THE OWNER AND HIS OR HER AGENTS DUE TO UNFORESEEN EROSION PROBLEMS OR IF THE SUBMITTED PLAN DOES NOT MEET THE PERFORMANCE STANDARDS SPECIFIED IN THE CLAR□ COUNTY TITLE 2□.□0 AND THE LAS VEGAS VALLEY CONSTRUCTION SITE BMP GUIDANCE MANUAL.
3. TEMPORARY OR PERMANENT STABILI□ATION PRACTICES WILL BE INSTALLED ON DISTURBED AREAS AS SOON AS PRACTICABLE AND NO LATER THAN 1□ DAYS AFTER THE CONSTRUCTION ACTIVITY IN THAT PORTION OF THE SITE HAS TEMPORARILY OR PERMANENTLY CEASED. SOME E□CEPTIONS MAY APPLY. REFER TO THE NEVADA STORMWATER GENERAL PERMIT FOR CONSTRUCTION ACTIVITY NVR100000, SECTION III.A.□.
4. AT A MINIMUM, THE CONTRACTOR OR HIS AGENT SHALL INSPECT ALL DISTURBED AREAS, AREAS USED FOR STORAGE OF MATERIALS AND E□UIPMENT THAT ARE E□POSED TO PRECIPITATION, VEHICLE ENTRANCE AND E□IT LOCATIONS, AND ALL BMPS WEE□LY, AND WITHIN 2□ HOURS AFTER ANY RAIN EVENT OF 0.□ INCHES OR MORE. THE CONTRACTOR OR HIS AGENT SHALL UPDATE OR MODIFY THE STORMWATER POLLUTION PREVENTION PLAN AS NECESSARY. SOME E□CEPTIONS TO WEE□LY INSPECTIONS MAY APPLY, SUCH AS SUSPENSION OF LAND DISTURBANCE ACTIVITIES. REFER TO THE NEVADA STORMWATER GENERAL PERMIT FOR CONSTRUCTION ACTIVITY NVR100000, SECTION III.A.12.
5. ACCUMULATED SEDIMENT IN BMPS SHALL BE REMOVED WITHIN SEVEN DAYS AFTER A STORMWATER RUNOFF EVENT OR PRIOR TO THE NE□T ANTICIPATED STORM EVENT, WHICHEVER IS EARLIER. SEDIMENT MUST BE REMOVED WHEN BMP DESIGN CAPACITY HAS BEEN REDUCED BY □0 PERCENT OR MORE

ASSESSOR PARCEL NUMBERS□MAPS

PARCEL NUMBER	PARCEL MAP NUMBERS
1□□-12-□01-003	1□□.12.□
1□□-12-□01-002	1□□.12.□
1□□-12-□01-002	1□□.12.□
1□9-0□-301-002	1□9.0□.3

BASE MAP

1. BASE MAP FROM AERIAL PHOTOGRAPHY BY □ENNEY AERIAL MAPPING, INC. ON NOVEMBER 1, 200□, AND UPDATED ON OCTOBER 1□-1□, 2013, BY AT□INS GLOBAL AND ENVIROCON, INC.
2. GROUND SURFACE CONTOUR INTERVAL □1 FOOT, VERTICAL DATUM NAVD□□.
3. UTILITY LOCATIONS SHOWN ARE APPRO□IMATE AND NOT ALL INCLUSIVE. CONTRACTOR SHALL LOCATE AND FIELD VERIFY.

CONSTRUCTION NOTES □APPLICABLE TO ALL SHEETS□

1. THE CONTRACTOR SHALL LOCATE AND MAR□ UNDERGROUND UTILITIES PRIOR TO CONSTRUCTION.
2. THE CONTRACTOR SHALL STAY AWAY AT LEAST 10 FEET FROM THE E□ISTING OVERHEAD POWER LINES.
3. THE CONTRACTOR SHALL PROTECT ALL E□ISTING STRUCTURES FROM DAMAGE DURING CONSTRUCTION.
4. ANY SITE PERIMETER FENCE SECTIONS THAT ARE REMOVED DURING CONSTRUCTION MUST BE REPLACED UPON COMPLETION OF WOR□. CONTRACTOR SHALL EITHER INSTALL TEMPORARY FENCE SECTIONS OUTSIDE OF WOR□ AREA OR PROVIDE 2□-HOUR PER DAY SECURITY UNTIL COMPLETION OF WOR□ AND PERIMETER FENCE SECTIONS ARE REINSTALLED.

GENERAL ELECTRICAL NOTES

SEE SHEET E□-001 "ELECTRICAL PLAN VIEW" FOR NOTES RELATING TO ALL ELECTRICAL WOR□.

ABBREVIATIONS

MH	MANHOLE
OHE	OVERHEAD ELECTRIC LINE
FM	FORCEMAIN
STA	STATION
FG	FINAL GRADE ELEVATION
E□	E□ISTING GRADE ELEVATION
CL	CENTERLINE
INV.	INVERT ELEVATION
ELEV.	ELEVATION
DIA.	DIAMETER
I.D.	INSIDE DIAMETER
HDPE	HIGH DENSITY POLYETHYLENE
SDR	STANDARD DIMENSION RATIO
SCH	SCHEDULE
SS	STAINLESS STEEL
NPT	NATIONAL PIPE TAPER

FAST Call before you UnderGround 1-702-432-5300 FREEWAY AND ARTERIAL SYSTEM OF TRANSPORTATION

Call before you Dig AVOID CUTTING UNDERGROUND UTILITY LINES. IT'S COSTLY. Call 811 OR 1-800-227-2600

AVOID HITTING OVERHEAD POWER LINES. IT'S COSTLY. CALL BEFORE YOU DIG OVERHEAD 1-702-227-2929

LEGEND

- 1□□□ — GROUND SURFACE CONTOUR ELEVATION
- SURFACE WATER
- GRAVEL ROAD
- FENCE AND GATE
- PROPERTY LINE
- OHE — OVERHEAD POWER LINE
- UNDERGROUND PIPE □APPRO□IMATE LOCATION□
- FLOOD□ONE BOUNDARY
- BRUSH□TREE LINE
- CULVERT
- MH — MANHOLE
- UTILITY POLE
- FIRE HYDRANT
- UTILITY POLE W□LIGHT
- PROTECTIVE POST□BALLARD
- SIGN
- STRUCTURE□BUILDING
- TAN□
- WALL
- RETAINING WALL
- MONITORING WELL
- E□TRACTION WELL
- SLURRY WALL
- □" HDPE SDR 1□ GRAVITY LINE FROM E□TRACTION WELLS TO LIFT STATION
- □" HDPE SDR 1□ FORCEMAIN FROM LIFT STATION TO AIR STRIPPER
- □" HDPE SDR 1□ GRAVITY LINE FROM AIR STRIPPER TO INJECTION TRENCHES

Attention: 1" If this scale bar does not measure 1" then drawing is not original scale.				
	1	1□□1□	ISSUED FOR CONSTRUCTION	MGR
	0	11□21□13	ISSUED FOR BIDDING	MGR
	NO.	DATE	ISSUE□REVISION	APP

Designed: M. Ruetten
Checked: M. Ruetten
Drawn: □. Curtin
Submittal Date: 11□21□2013

GEI Consultants
31□9 Voyager Drive
Green Bay, Wisconsin □311
920-□□□-□200

TITANIUM METALS CORPORATION
1□1 NORTH WATER STREET
BLAC□ MOUNTAIN INDUSTRIAL CENTER
HENDERSON, NEVADA □901□

GEI Project 13230□0

GROUNDWATER REMEDIATION E□TRACTION SYSTEM

GENERAL NOTES, ABBREVIATIONS AND LEGEND

DWG. NO. C-2

SHEET NO. 2 of 2□

J:\Landfills\Timet\Recharge□Trenches\E□TRACTION□SYSTEM□REV-2\C2□Rev2□General-Notes□Legend

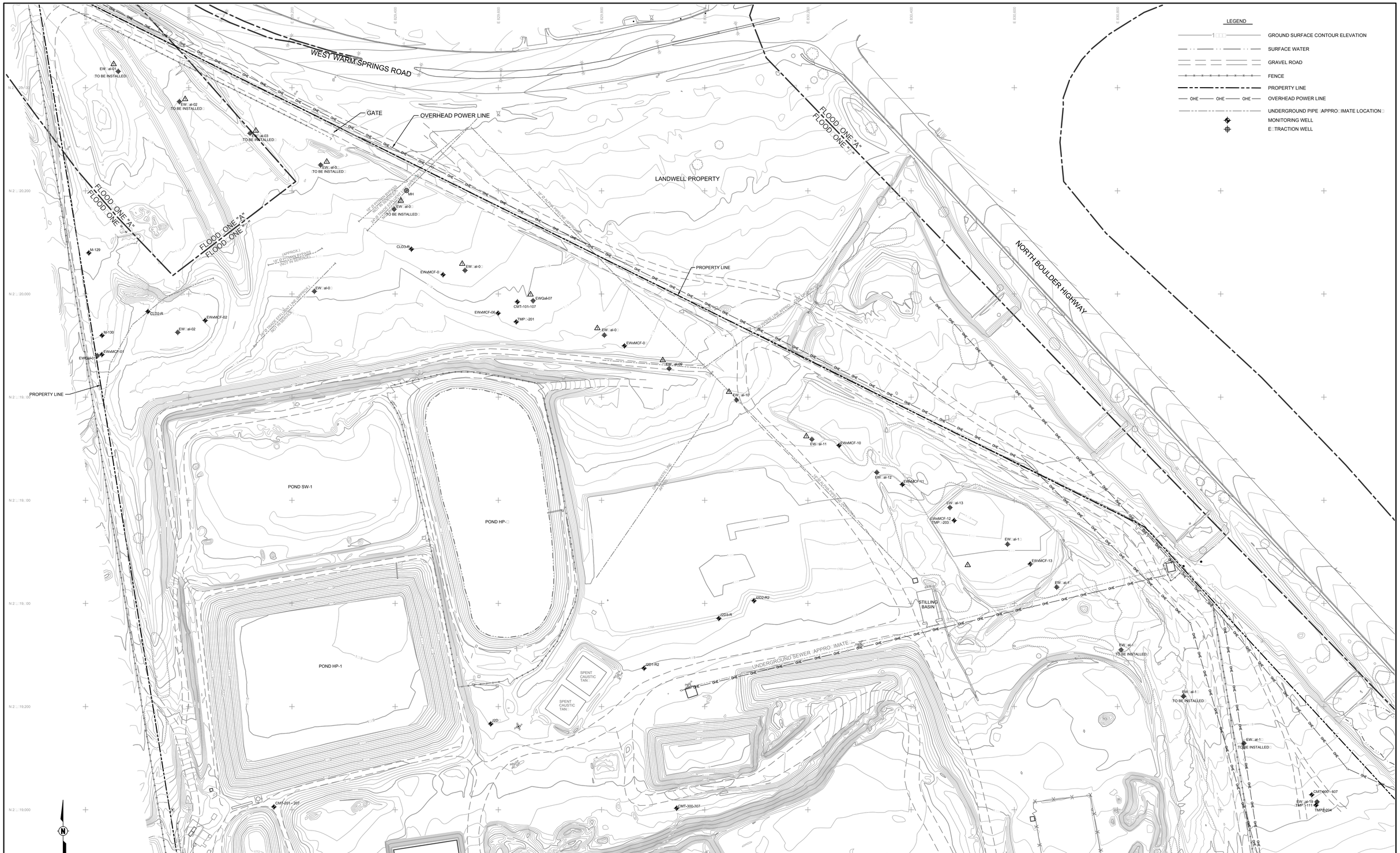

Attention:

0 1"

If this scale bar does not measure 1" then drawing is not original scale.

NO.	DATE	ISSUE/REVISION	APP
1	12/13/13	REVISED EXTRACTION WELL LOCATIONS, REVISED CONTOURS	GAO
0	11/21/13	ISSUED FOR BIDDING	MGR

Designed: M. Ruetten
Checked: M. Ruetten
Drawn: X. Curtin
Submittal Date: 11/21/2013

GEI Consultants
3119 Voyager Drive
Green Bay, Wisconsin 54311
920-497-2758

TITANIUM METALS CORPORATION
1701 NORTH WATER STREET
BLACK MOUNTAIN INDUSTRIAL CENTER
HENDERSON, NEVADA 89015

GEI Project 13230-10

GROUNDWATER REMEDIATION
EXTRACTION SYSTEM

EXISTING CONDITIONS

DWG. NO. C-3

SHEET NO. 3 of 2

J:\Landfills\Timet\Recharge Trenches\EXTRACTION SYSTEM REV-2\C3 Rev2 Existing-Conditions

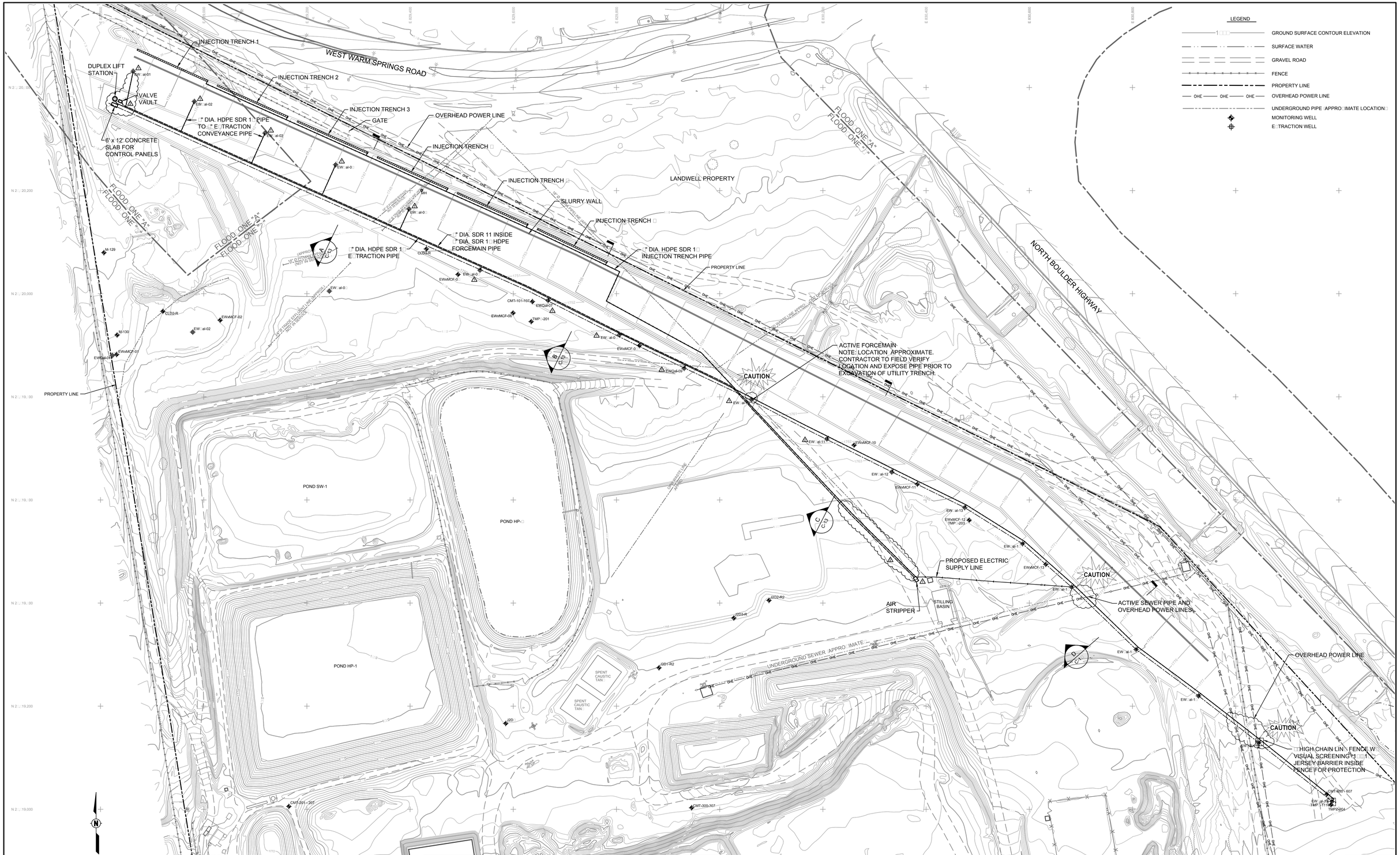

Attention: If this scale bar does not measure 1" then drawing is not original scale.			
	2	11/11/13	REVISED LIFT STATION, VALVE VAULT, CONCRETE SLAB AND LATERAL PIPE LOCATIONS, REVISED PIPING ALIGNMENT	GAO
	1	12/13/13	REVISED EXTRACTION WELL LOCATIONS, AIR STRIPPER LOCATION, ADDED ELECTRIC SUPPLY, CONCRETE SLAB	GAO
	0	11/21/13	ISSUED FOR BIDDING	MGR
	NO.	DATE	ISSUE/REVISION	APP

Designed: M. Ruetten
Checked: M. Ruetten
Drawn: X. Curtin
Submittal Date: 11/21/2013

GEI Consultants
3119 Voyager Drive
Green Bay, Wisconsin 54311
920-497-2758

TITANIUM METALS CORPORATION
1771 NORTH WATER STREET
BLACK MOUNTAIN INDUSTRIAL CENTER
HENDERSON, NEVADA 89015

GEI Project 132300

GROUNDWATER REMEDIATION
EXTRACTION SYSTEM

CONSTRUCTION PLAN

DWG. NO. C-3

SHEET NO. 3 of 23

J:\Landfills\Timet\Recharge Trenches\EXTRACTION SYSTEM\REV-2\C-3 Rev2 Construction-Plan

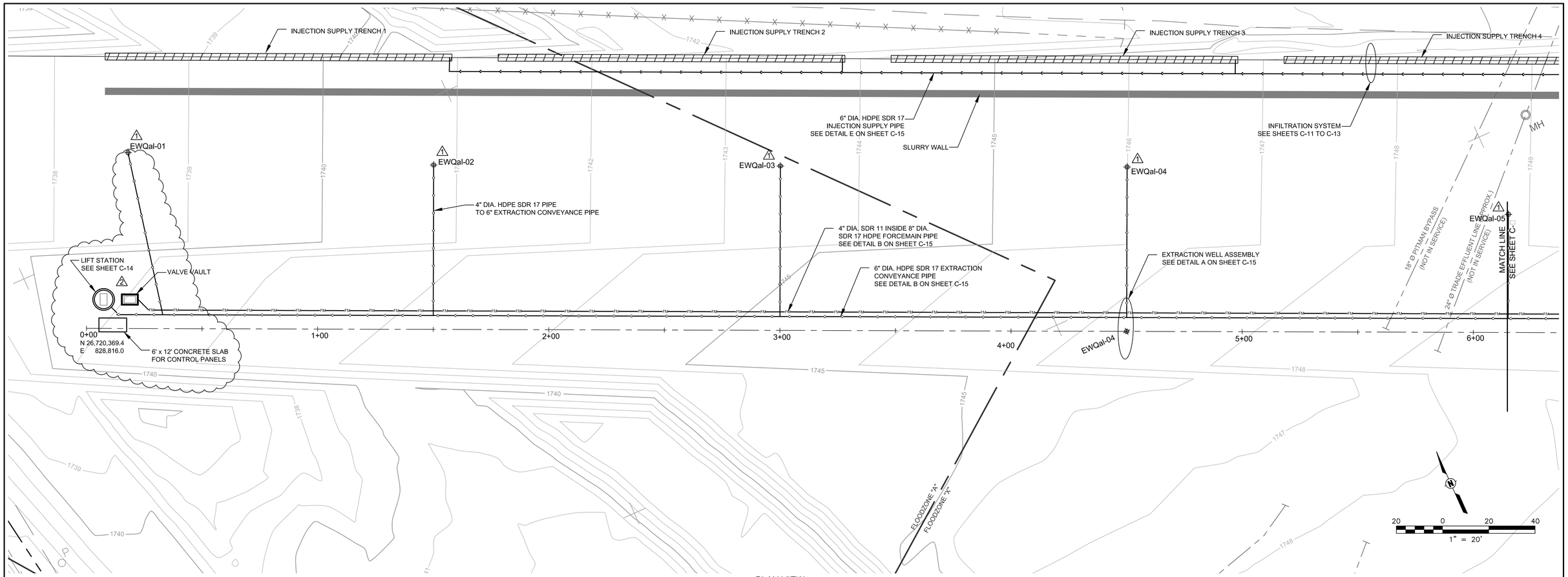

PLAN VIEW
STA 0□00 TO STA □□00
SCALE: 1"□20□

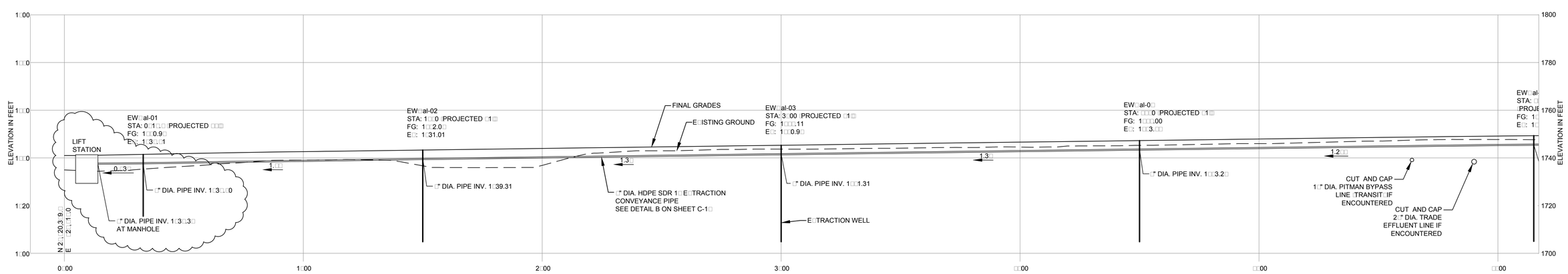

PROFILE
STA 0□00 TO STA □□00
SCALE: 1"□20□

NOTES:

1. ALL SITE UTILITY LOCATIONS ARE APPRO□IMATE, AND THE CONTRACTOR MUST FIELD VERIFIED THOSE LOCATIONS PRIOR TO CONSTRUCTION.
2. UTILITY ELEVATIONS ARE APPRO□IMATE.

Attention:

0 1"

If this scale bar does not measure 1" then drawing is not original scale.

NO.	DATE	ISSUE□REVISION	APP
2	1□□1□	REVISED LIFT STATION, VALVE VAULT, CONCRETE SLAB AND LATERAL PIPE LOCATIONS, REVISED PIPING ALIGNMENT	GAO
1	12□13□13	REVISED E□TRACTION WELL LOCATIONS, ADDED CONCRETE SLAB	GAO
0	11□21□13	ISSUED FOR BIDDING	MGR

Designed: M. Ruetten
Checked: M. Ruetten
Drawn: □. Curtin
Submittal Date: 11□21□2013

GEI Consultants
31□9 Voyager Drive
Green Bay, Wisconsin □311
920-□□□-□200

TITANIUM METALS CORPORATION
1□1 NORTH WATER STREET
BLAC□ MOUNTAIN INDUSTRIAL CENTER
HENDERSON, NEVADA □901□

GEI Project 13230□0

GROUNDWATER REMEDIATION
E□TRACTION SYSTEM

E□TRACTION CONVEYANCE PIPE
PLAN □ PROFILE
STA 0□00 TO STA □□00

DWG. NO. C-□

SHEET NO. □ of 2□

J:\Landfills\Timet\Recharge□Trenches\E□TRACTION□SYSTEM□REV-2\C□-9□Rev2□Extraction□Conv□Plan□Profile

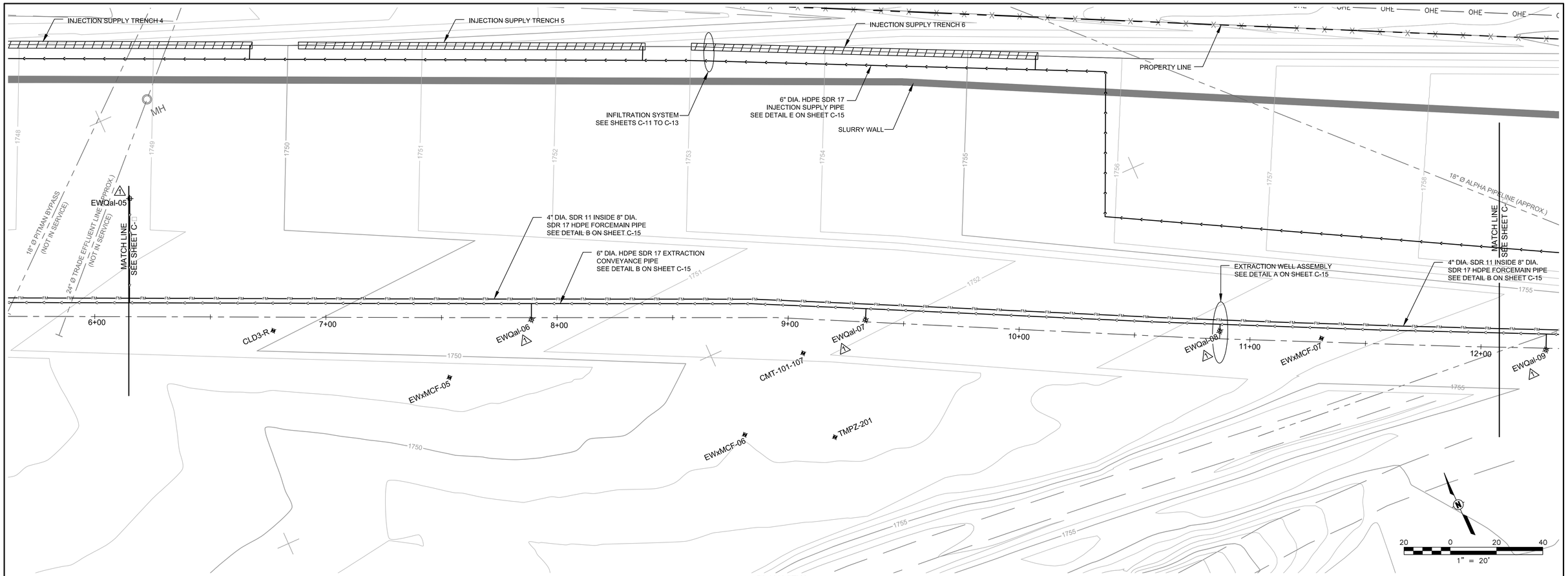

PLAN VIEW
STA 00 TO STA 12 00
SCALE: 1" 20

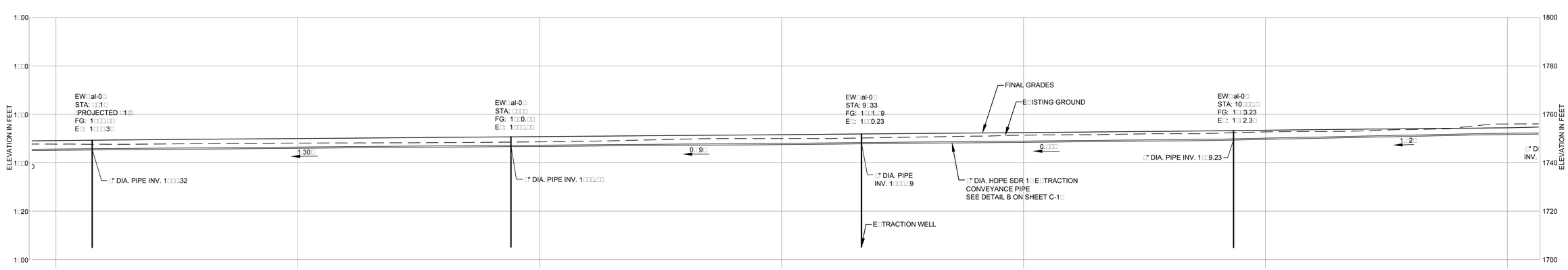

PROFILE
STA 00 TO STA 12 00
SCALE: 1" 20

NOTES:

1. ALL SITE UTILITY LOCATIONS ARE APPRO IMATE, AND THE CONTRACTOR MUST FIELD VERIFIED THOSE LOCATIONS PRIOR TO CONSTRUCTION.
2. UTILITY ELEVATIONS ARE APPRO IMATE.

Attention:

0 1"

If this scale bar does not measure 1" then drawing is not original scale.

NO.	DATE	ISSUE REVISION	APP
1	12 13 13	REVISED E TRACTION WELL LOCATIONS	GAO
0	11 21 13	ISSUED FOR BIDDING	MGR

Designed: M. Ruetten
Checked: M. Ruetten
Drawn: . Curtin
Submittal Date: 11 21 2013

GEI Consultants
31 9 Voyager Drive
Green Bay, Wisconsin 311
920- - 200

TITANIUM METALS CORPORATION
1 1 NORTH WATER STREET
BLAC MOUNTAIN INDUSTRIAL CENTER
HENDERSON, NEVADA 901
GEI Project 13230 0

GROUNDWATER REMEDIATION
E TRACTION SYSTEM

E TRACTION CONVEYANCE PIPE
PLAN PROFILE
STA 00 TO STA 12 00

DWG. NO.
C-

SHEET NO.
of 2

J:\Landfills\Timet\Recharge Trenches\E TRACTION SYSTEM REV-2\C -9 Rev2 Extraction Conv Plan Profile

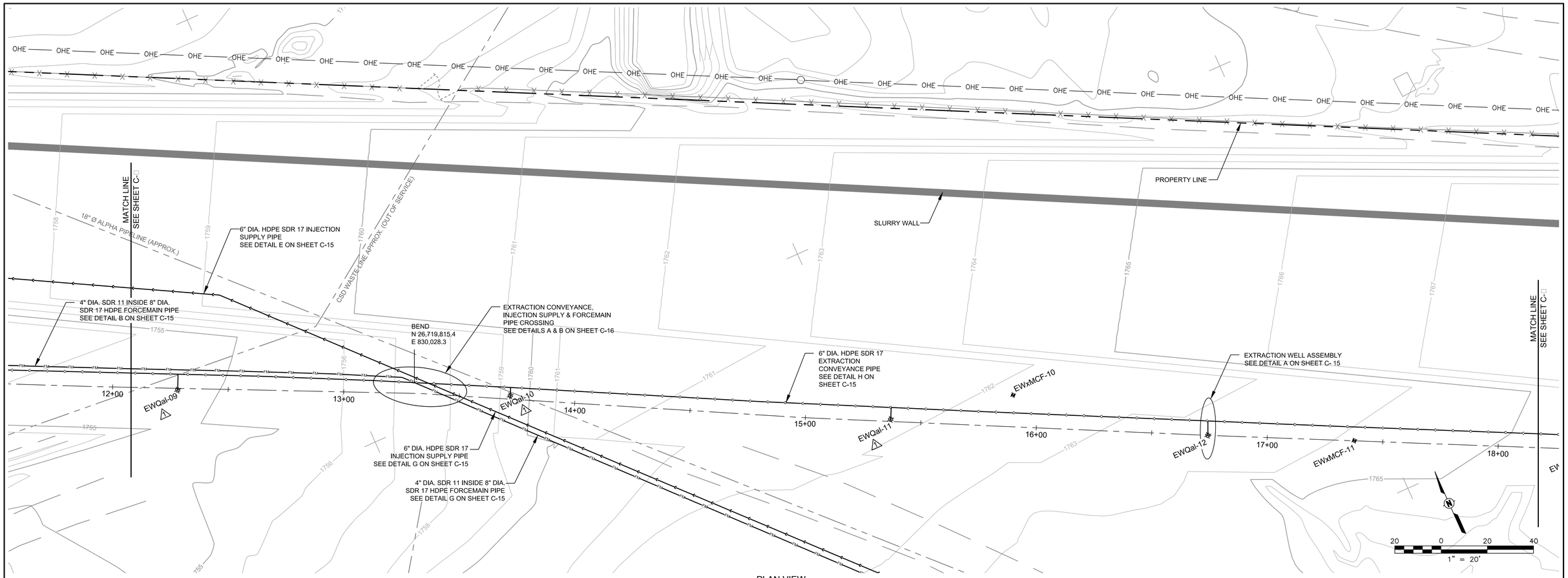

PLAN VIEW
STA 12□00 TO STA 1□□00
SCALE: 1"□20□

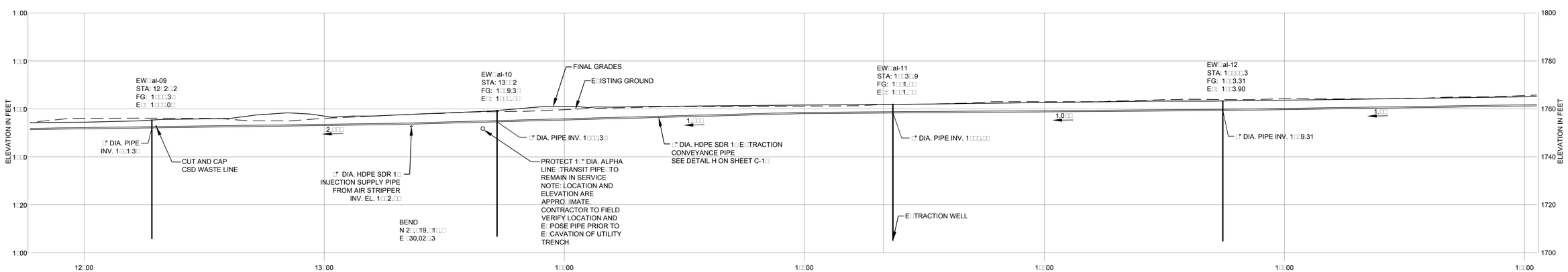

PROFILE
STA 12□00 TO STA 1□□00
SCALE: 1"□20□

NOTES:

1. ALL SITE UTILITY LOCATIONS ARE APPRO□IMATE, AND THE CONTRACTOR MUST FIELD VERIFIED THOSE LOCATIONS PRIOR TO CONSTRUCTION.
2. UTILITY ELEVATIONS ARE APPRO□IMATE.

Attention:

0 1"

If this scale bar does not measure 1" then drawing is not original scale.

NO.	DATE	ISSUE/REVISION	APP
1	12/13/13	REVISED E□TRACTION WELL LOCATIONS	GAO
0	11/21/13	ISSUED FOR BIDDING	MGR

Designed: M. Ruetten
Checked: M. Ruetten
Drawn: □. Curtin
Submittal Date: 11/21/2013

GEI Consultants
31□9 Voyager Drive
Green Bay, Wisconsin □311
920-□□□-□200

TITANIUM METALS CORPORATION
1□1 NORTH WATER STREET
BLAC□ MOUNTAIN INDUSTRIAL CENTER
HENDERSON, NEVADA □901□

GEI Project 13230□0

GROUNDWATER REMEDIATION
E□TRACTION SYSTEM

E□TRACTION CONVEYANCE PIPE
PLAN □ PROFILE
STA 12□00 TO STA 1□□00

DWG. NO.
C-□

SHEET NO.
□ of 2□

J:\Landfills\Timet\Recharge□Trenches\E□TRACTION□SYSTEM□REV-2\C□9□Rev2□Extraction□Conv□Plan□Profile

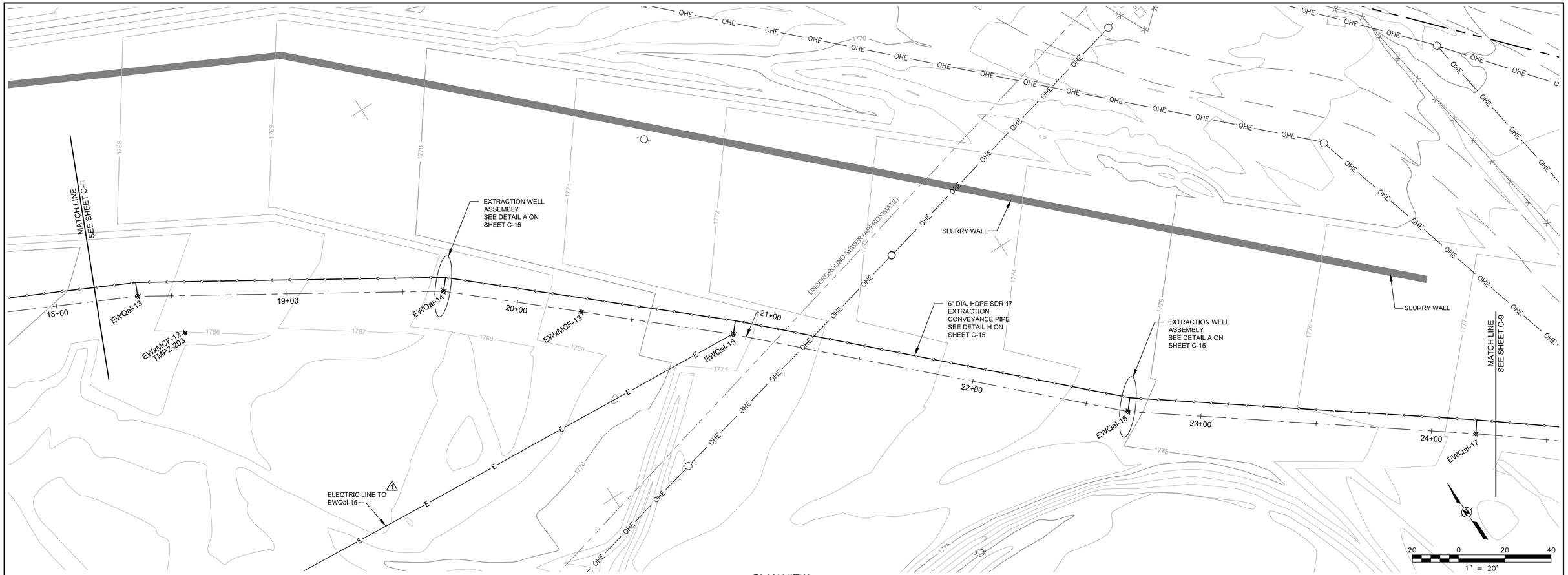

PLAN VIEW
STA 1□□00 TO STA 2□□00
SCALE: 1"□20□

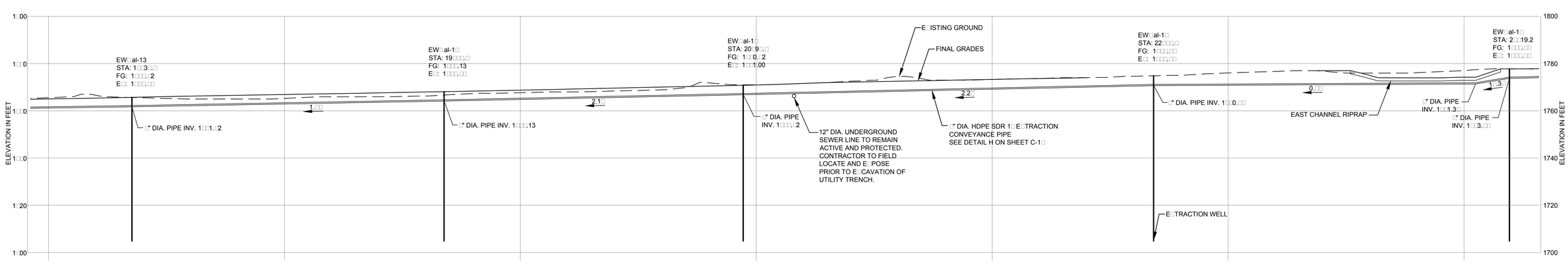

PROFILE
STA 1□□00 TO STA 2□□00
SCALE: 1"□20□

NOTES:

1. ALL SITE UTILITY LOCATIONS ARE APPRO□IMATE, AND THE CONTRACTOR MUST FIELD VERIFIED THOSE LOCATIONS PRIOR TO CONSTRUCTION.
2. UTILITY ELEVATIONS ARE APPRO□IMATE.

Attention:

0 1"

If this scale bar does not measure 1" then drawing is not original scale.

NO.	DATE	ISSUE/REVISION	APP
1	12/13/13	ADDED ELECTRIC LINE TO EW□al-1□	GAO
0	11/21/13	ISSUED FOR BIDDING	MGR

Designed: M. Ruetten
Checked: M. Ruetten
Drawn: □. Curtin
Submittal Date: 11/21/2013

GEI Consultants
31□9 Voyager Drive
Green Bay, Wisconsin □311
920-□□□-□200

TITANIUM METALS CORPORATION
1□1 NORTH WATER STREET
BLAC□ MOUNTAIN INDUSTRIAL CENTER
HENDERSON, NEVADA □901□

GEI Project 13230□0

GROUNDWATER REMEDIATION
E□TRACTION SYSTEM

E□TRACTION CONVEYANCE PIPE
PLAN □ PROFILE
STA 1□□00 TO STA 2□□00

DWG. NO. C-□

SHEET NO. □ of 2□

J:\Landfills\Timet\Recharge□Trenches\E□TRACTION□SYSTEM□REV-2\C□-9□Rev2□Extraction□Conv□Plan□Profile

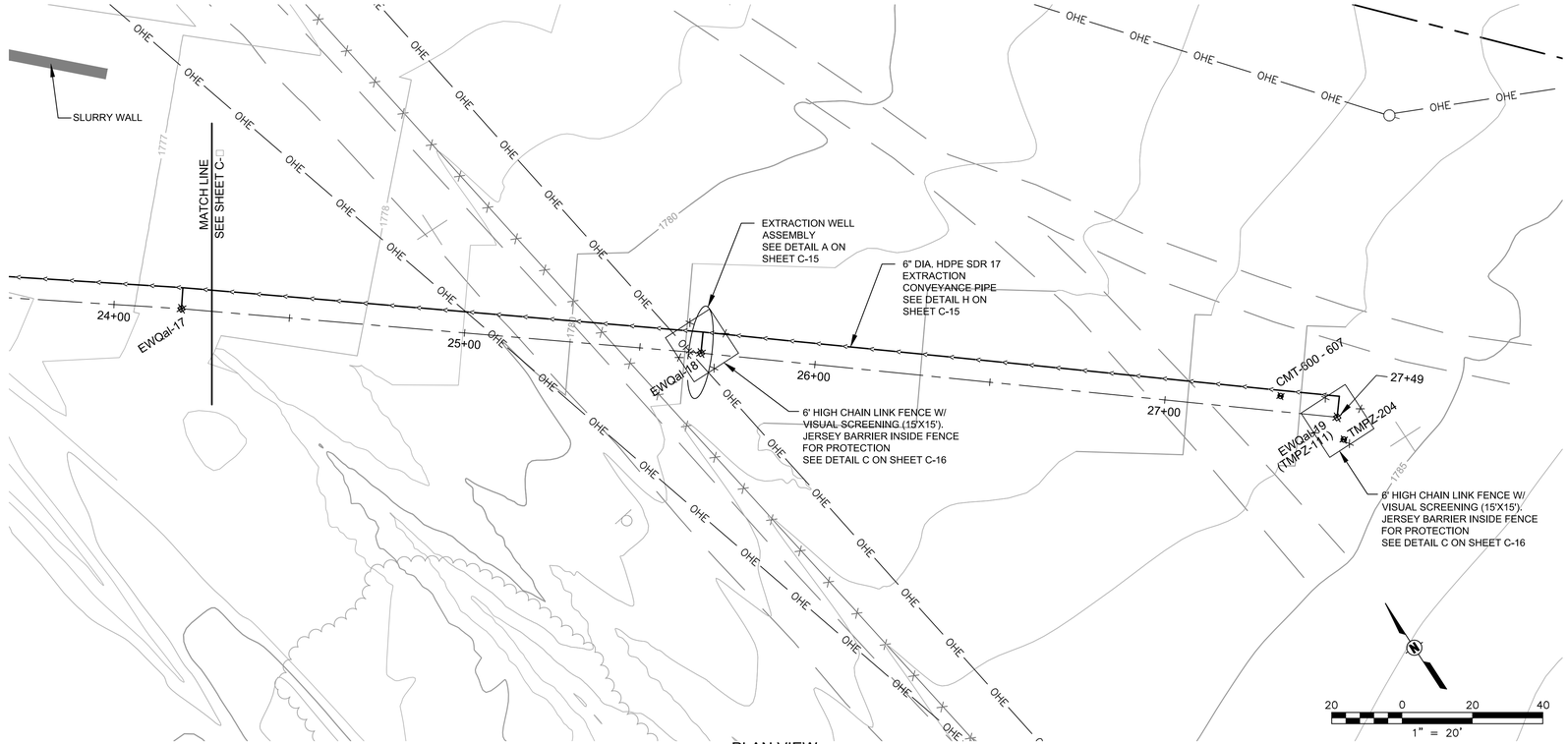

PLAN VIEW
STA 2□□00 TO STA 2□□□9
SCALE: 1"□20□

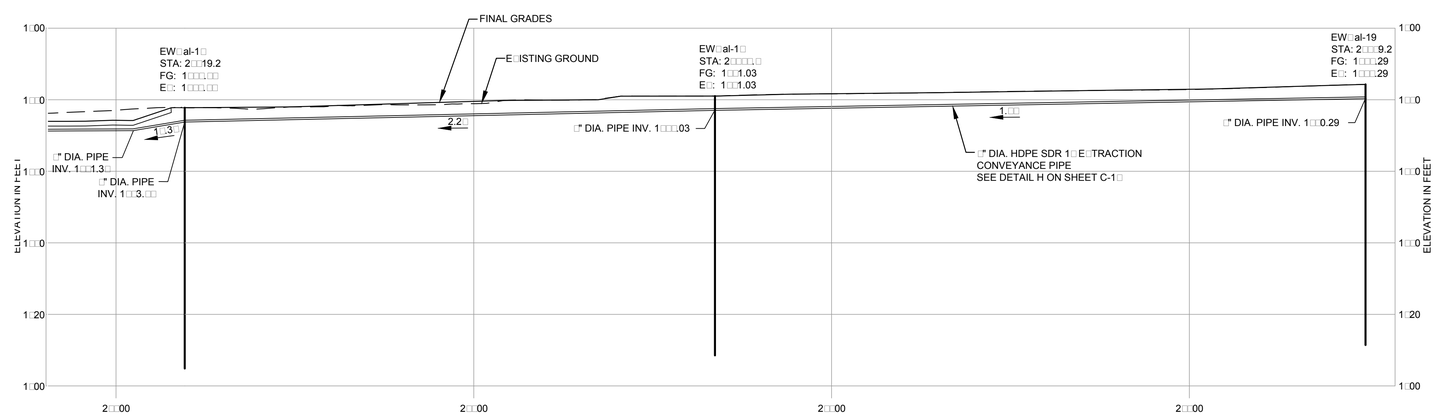

PROFILE
STA 2□□00 TO STA 2□□□9
SCALE: 1"□20□

NOTES:

1. ALL SITE UTILITY LOCATIONS ARE APPRO□IMATE, AND THE CONTRACTOR MUST FIELD VERIFIED THOSE LOCATIONS PRIOR TO CONSTRUCTION.
2. UTILITY ELEVATIONS ARE APPRO□IMATE.

Attention:
0 1"
If this scale bar does not measure 1" then drawing is not original scale.

NO.	DATE	ISSUE/REVISION	APP
0	11/21/13	ISSUED FOR BIDDING	MGR

Designed: M. Ruetten
Checked: M. Ruetten
Drawn: □. Curtin
Submittal Date: 11/21/2013

GEI Consultants
31□9 Voyager Drive
Green Bay, Wisconsin □311
920-□□□-□200

TITANIUM METALS CORPORATION
1□1 NORTH WATER STREET
BLAC□ MOUNTAIN INDUSTRIAL CENTER
HENDERSON, NEVADA □901□

GEI Project 13230□0

GROUNDWATER REMEDIATION
E□TRACTION SYSTEM

E□TRACTION CONVEYANCE PIPE
PLAN □ PROFILE
STA 2□□00 TO STA 2□□□9

DWG. NO. C-9

SHEET NO. 9 of 2□

J:\Landfills\Timet\Recharge□Trenches\E□TRACTION□SYSTEM□REV-2\C□-9□Rev2□Extraction□Conv□Plan□Profile

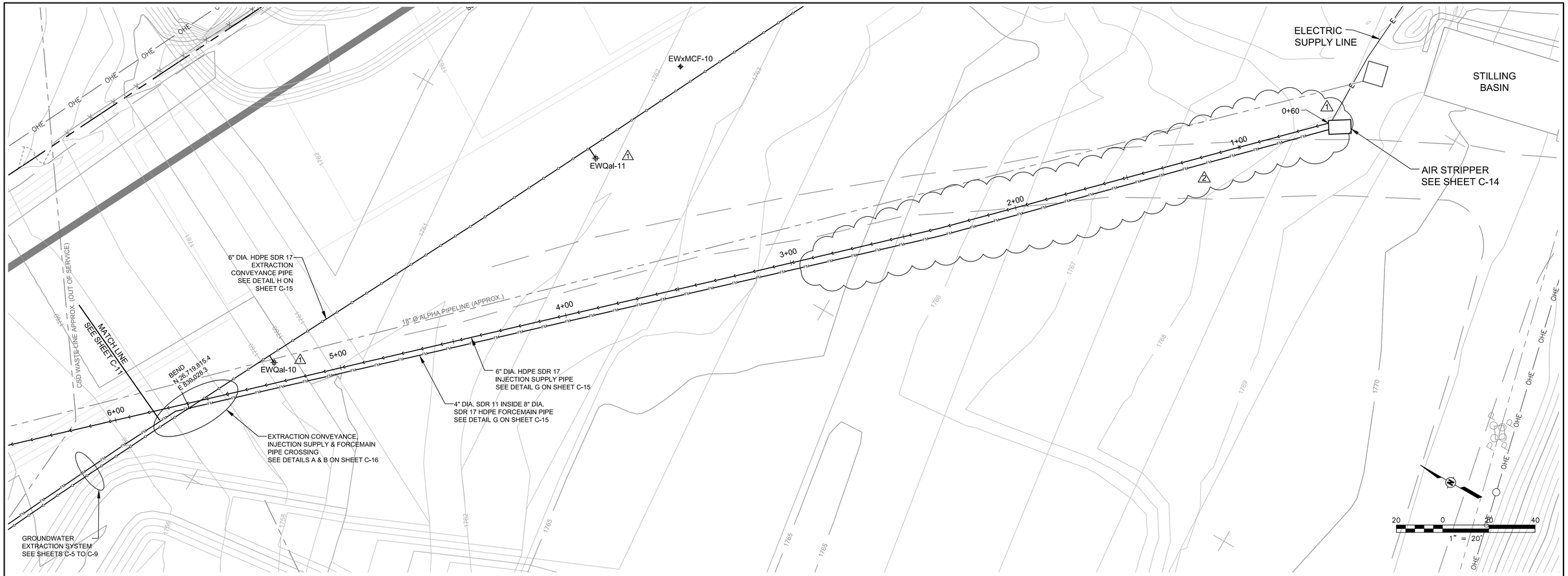

PLAN VIEW
STA 0□00 TO STA □□00
SCALE: 1"□20□

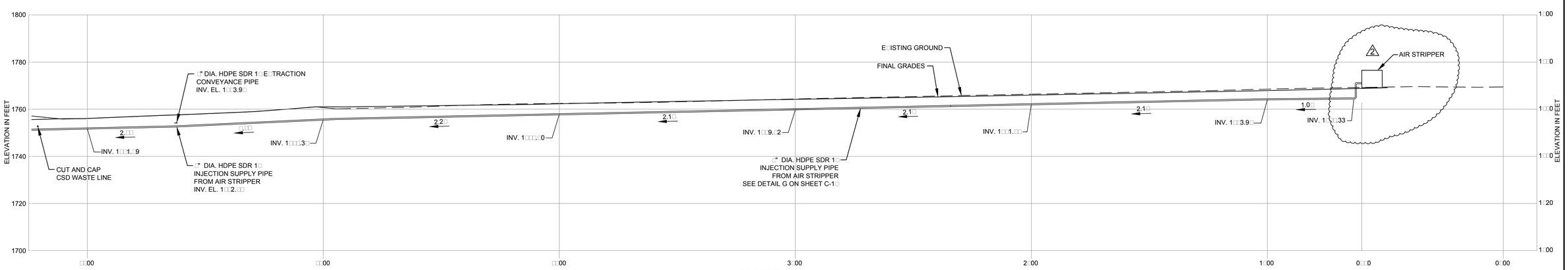

PROFILE
STA 0□00 TO STA □□00
SCALE: 1"□20□

NOTES:

1. ALL SITE UTILITY LOCATIONS ARE APPRO□IMATE, AND THE CONTRACTOR MUST FIELD VERIFIED THOSE LOCATIONS PRIOR TO CONSTRUCTION.
2. UTILITY ELEVATIONS ARE APPRO□IMATE.

Attention:

0 1"

If this scale bar does not measure 1" then drawing is not original scale.

NO.	DATE	ISSUE/REVISION	APP
2	1□/□□/1□	REVISED FORCE MAIN AND INJECTION TRENCH SUPPLY LINE ALIGNMENT	GAO
1	12/13/13	REVISED E□TRACTION WELL LOCATIONS, REVISED AIR STRIPPER LOCATION, ADDED ELECTRIC LINE	GAO
0	11/21/13	ISSUED FOR BIDDING	MGR

Designed: M. Ruetten
Checked: M. Ruetten
Drawn: □. Curtin
Submittal Date: 11/21/2013

GEI Consultants
31□9 Voyager Drive
Green Bay, Wisconsin □311
920-□□-□200

TITANIUM METALS CORPORATION
1□1 NORTH WATER STREET
BLAC□ MOUNTAIN INDUSTRIAL CENTER
HENDERSON, NEVADA □901□

GEI Project 13230□0

GROUNDWATER REMEDIATION
E□TRACTION SYSTEM

INFILTRATION SYSTEM
PLAN □ PROFILE
STA 0□00 TO STA □□00

DWG. NO. C-10

SHEET NO. 10 of 2□

J:\Landfills\Timet\Recharge□Trenches\E□TRACTION□SYSTEM□REV-2\C10-12□Rev2□Infiltration-System□Plan□Profile

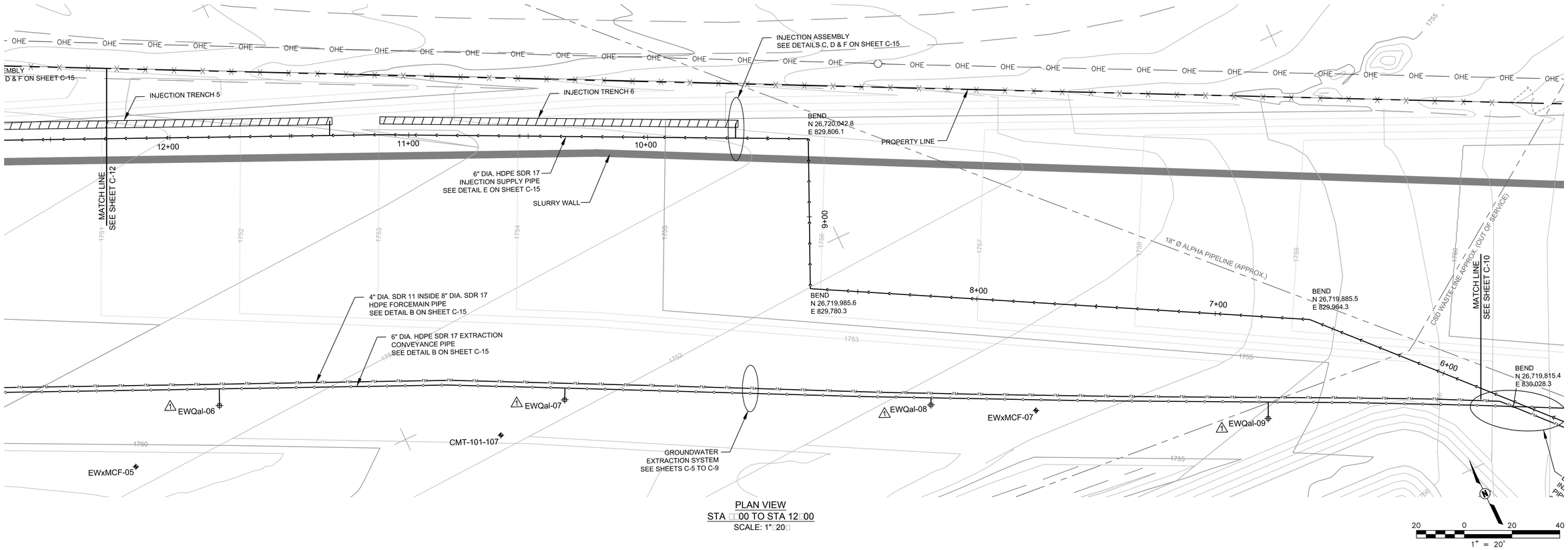

PLAN VIEW
STA 00 TO STA 12 00
SCALE: 1" 20

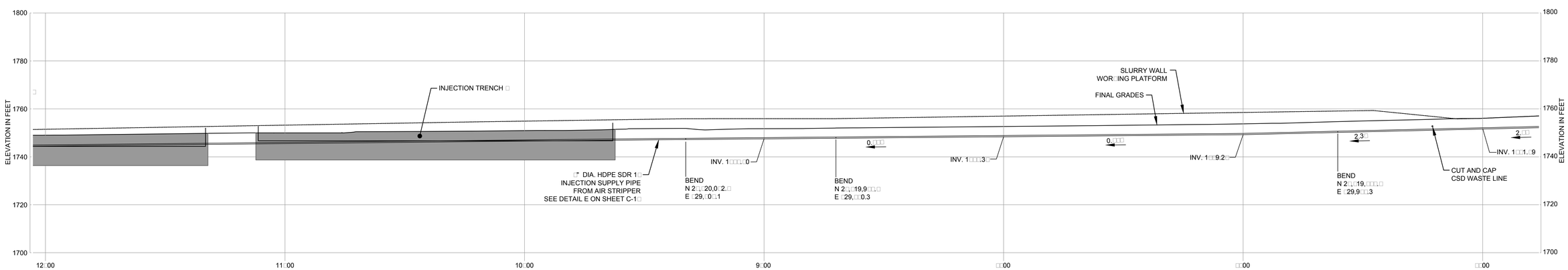

PROFILE
STA 00 TO STA 12 00
SCALE: 1" 20

NOTES:

1. ALL SITE UTILITY LOCATIONS ARE APPRO IMATE, AND THE CONTRACTOR MUST FIELD VERIFIED THOSE LOCATIONS PRIOR TO CONSTRUCTION.
2. UTILITY ELEVATIONS ARE APPRO IMATE.

Attention:

0 1"

If this scale bar does not measure 1" then drawing is not original scale.

NO.	DATE	ISSUE REVISION	APP
1	12 13 13	REVISED E TRACTION WELL LOCATIONS	GAO
0	11 21 13	ISSUED FOR BIDDING	MGR

Designed: M. Ruetten
Checked: M. Ruetten
Drawn: . Curtin
Submittal Date: 11 21 2013

GEI Consultants
31 9 Voyager Drive
Green Bay, Wisconsin 311
920- - 200

TITANIUM METALS CORPORATION
1 1 NORTH WATER STREET
BLAC MOUNTAIN INDUSTRIAL CENTER
HENDERSON, NEVADA 901

GEI Project 13230 0

GROUNDWATER REMEDIATION
E TRACTION SYSTEM

INFILTRATION SYSTEM
PLAN PROFILE
STA 00 TO STA 12 00

DWG. NO. C-11

SHEET NO. 11 of 2

J:\Landfills\Timet\Recharge Trenches\E TRACTION SYSTEM\REV-2\C10-12 Rev2 Infiltration-System Plan Profile

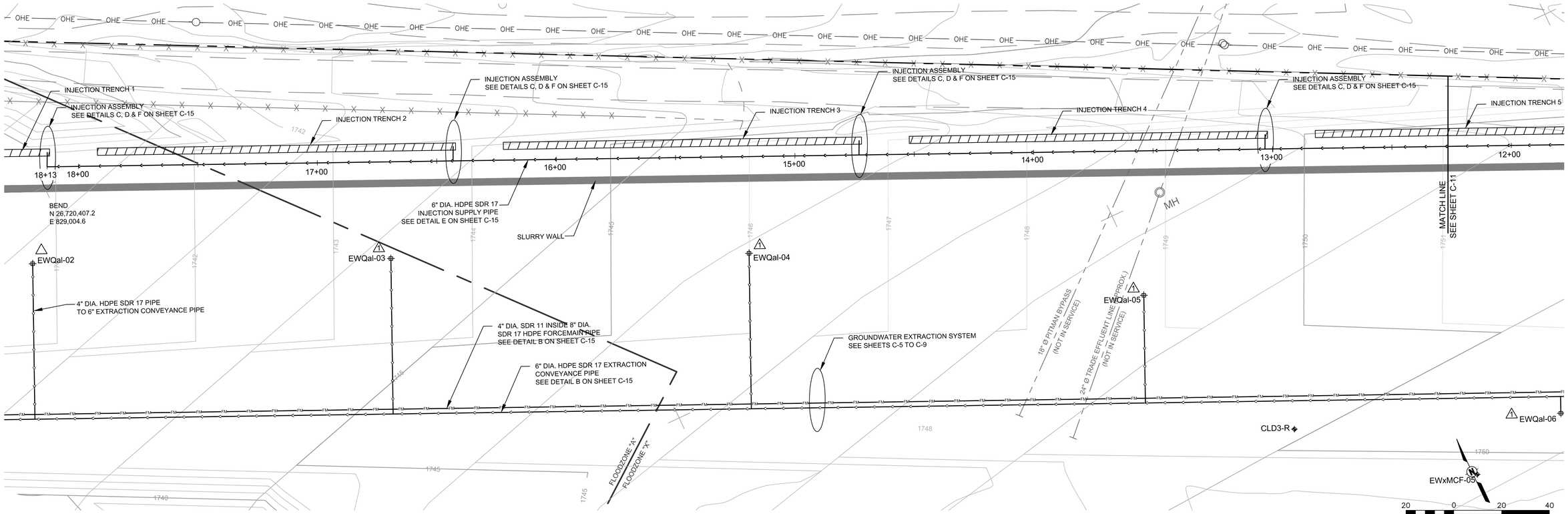

PLAN VIEW
STA 12+00 TO STA 13+13
SCALE: 1"=20'

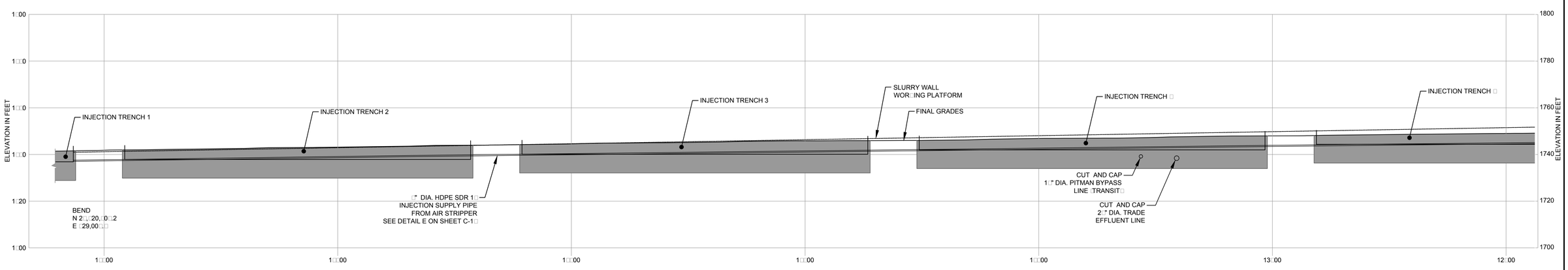

PROFILE
STA 12+00 TO STA 13+13
SCALE: 1"=20'

NOTES:

1. ALL SITE UTILITY LOCATIONS ARE APPROXIMATE, AND THE CONTRACTOR MUST FIELD VERIFIED THOSE LOCATIONS PRIOR TO CONSTRUCTION.
2. UTILITY ELEVATIONS ARE APPROXIMATE.

Attention:

0 1"

If this scale bar does not measure 1" then drawing is not original scale.

NO.	DATE	ISSUE/REVISION	APP
1	12/13/13	REVISED EXTRACTION WELL LOCATIONS	GAO
0	11/21/13	ISSUED FOR BIDDING	MGR

Designed: M. Ruetten
Checked: M. Ruetten
Drawn: R. Curtin
Submittal Date: 11/21/2013

GEI Consultants
3119 Voyager Drive
Green Bay, Wisconsin 54311
920-497-2758

TITANIUM METALS CORPORATION
1701 NORTH WATER STREET
BLACK MOUNTAIN INDUSTRIAL CENTER
HENDERSON, NEVADA 89015

GEI Project 132300

GROUNDWATER REMEDIATION
EXTRACTION SYSTEM

INFILTRATION SYSTEM
PLAN & PROFILE
STA 12+00 TO STA 13+13

DWG. NO. C-12

SHEET NO. 12 of 25

J:\Landfills\Timet\Recharge\Trenches\EXTRACTION SYSTEM\REV-2\C10-12\Rev2\Infiltration-System\Plan\Profile

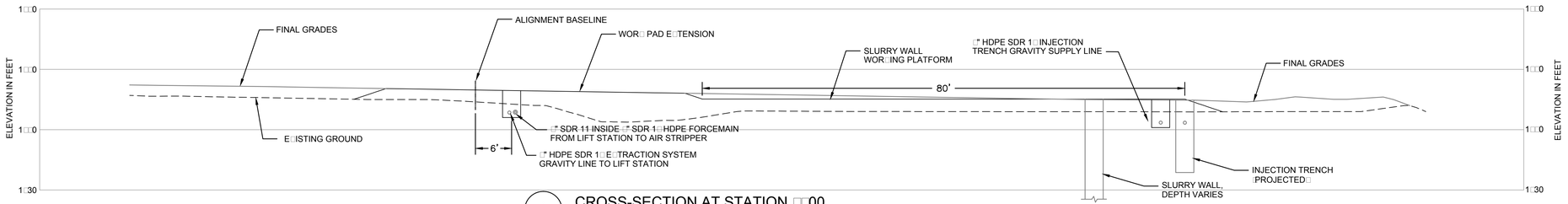

A CROSS-SECTION AT STATION □□00
SCALE: 1" □10□H□V

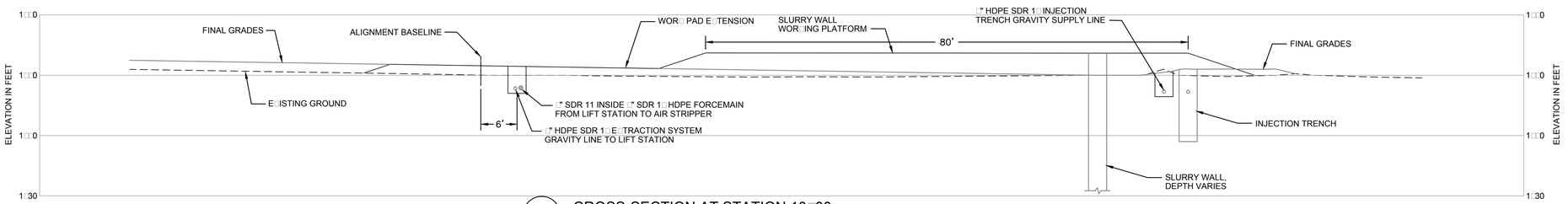

B CROSS-SECTION AT STATION 10□00
SCALE: 1" □10□H□V

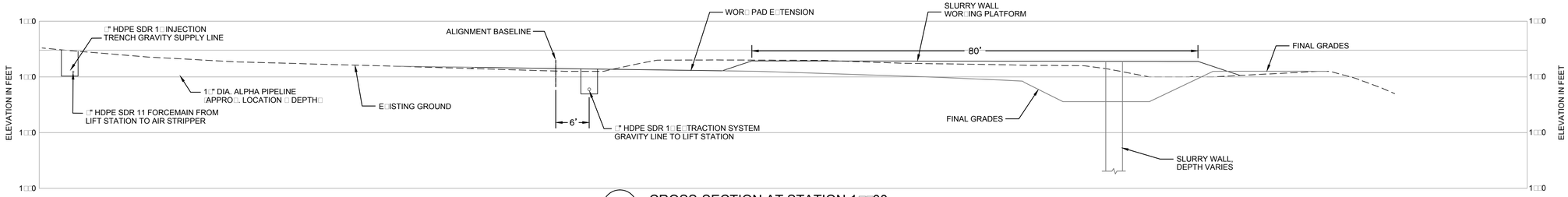

C CROSS-SECTION AT STATION 1□□00
SCALE: 1" □10□H□V

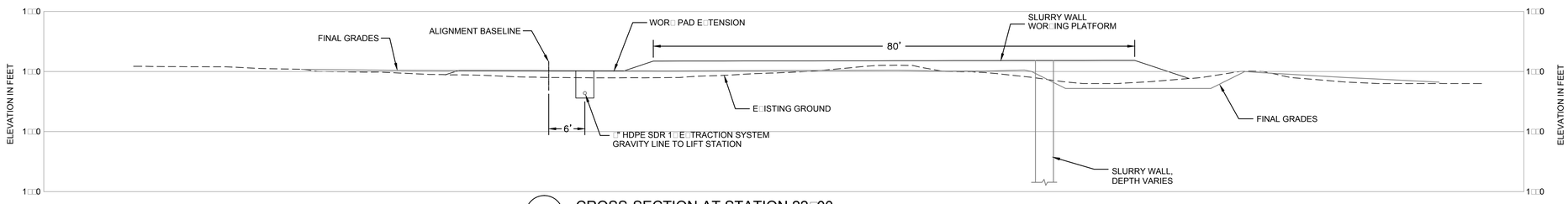

D CROSS-SECTION AT STATION 22□00
SCALE: 1" □10□H□V

Attention:				
0 1"				
If this scale bar does not measure 1" then drawing is not original scale.	1	1□□1□	ISSUED FOR CONSTRUCTION	MGR
	0	11□21□13	ISSUED FOR BIDDING	MGR
	NO.	DATE	ISSUE□REVISION	APP

Designed: M. Ruetten
Checked: M. Ruetten
Drawn: □. Curtin
Submittal Date: 11□21□2013

GEI Consultants
31□9 Voyager Drive
Green Bay, Wisconsin □311
920-□□□-□200

TITANIUM METALS CORPORATION
1□1 NORTH WATER STREET
BLAC□ MOUNTAIN INDUSTRIAL CENTER
HENDERSON, NEVADA □901□

GEI Project 13230□0

GROUNDWATER REMEDIATION
E□TRACTION SYSTEM

CROSS-SECTIONS

DWG. NO. C-13

SHEET NO. 13 of 2□

J:\Landfills\Timet\Recharge□Trenches\E□TRACTION□SYSTEM□REV-2\C13□Rev2□Cross-Sections

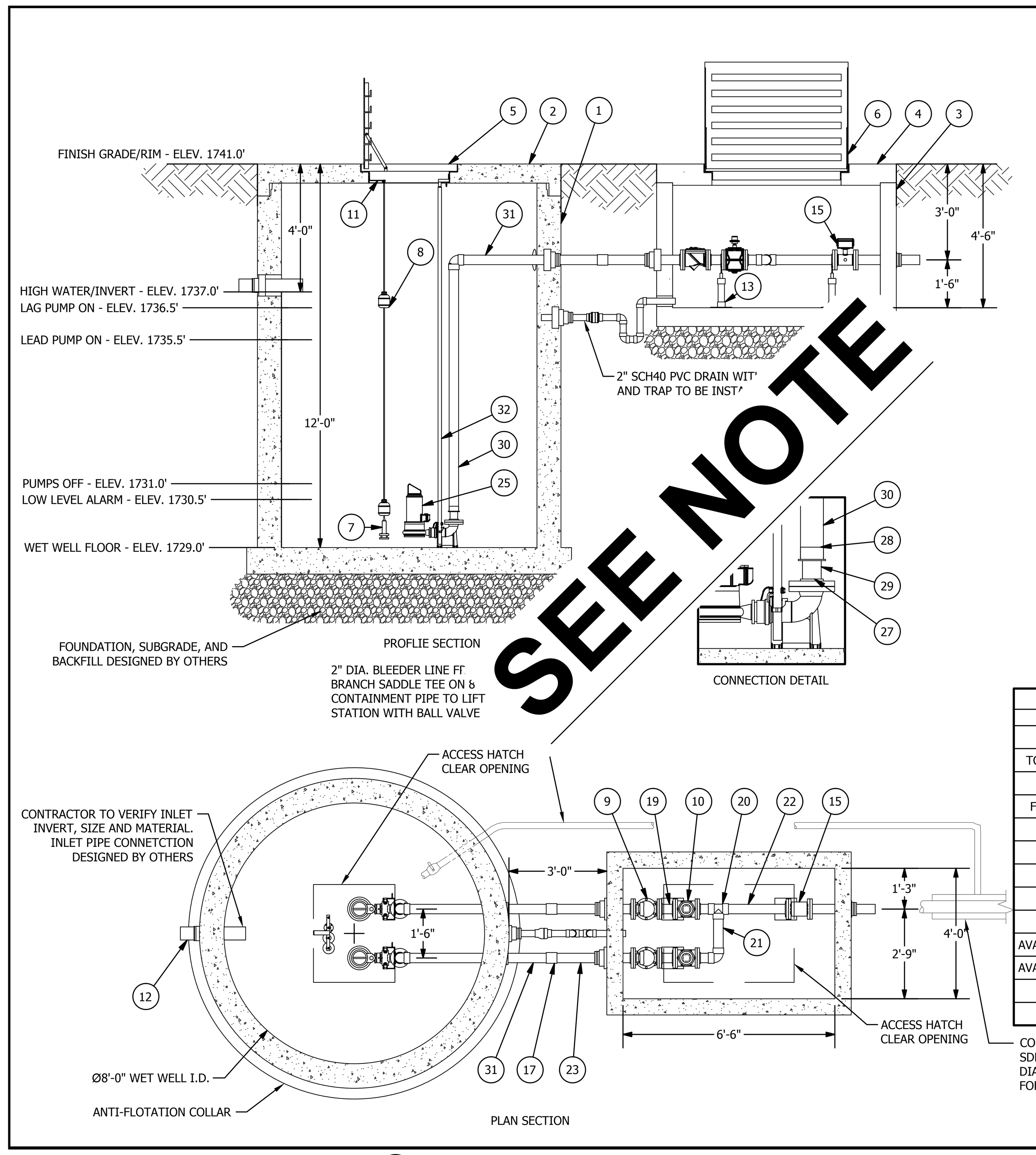

PARTS LIST		
ITEM	QTY	DESCRIPTION
1	1	48" DIA JENSEN PRECAST CONCRETE MANHOLE 14'-0" RIM TO INSIDE FLOOR
2	1	48" DIA JENSEN PRECAST CUSTOM CONCRETE FLAT TOP
3	1	48" X 78" JENSEN PRECAST CONCRETE VAULT BASE (4'-6" RIM TO INSIDE FLOOR)
4	1	48" X 78" JENSEN PRECAST CONCRETE VAULT FLAT TOP
5	1	30" x 36" ALUMINUM, SINGLE DOOR ACCESS HATCH FOR PEDESTRIAN 300PSF LIVE LOADING
6	1	36" x 48" ALUMINUM, SINGLE DOOR ACCESS HATCH FOR PEDESTRIAN 300PSF LIVE LOADING
7	1	PRESSURE TRANSDUCER
8	2	INTERNALLY WEIGHTED NON-MECURY MECHANICAL FLOAT BACK-UP FOR REDUNDANT HIGH/LOW LEVEL CONDITION
9	2	3" FLG SWING CHECK VALVE BY VAL-MATIC
10	2	3" FLG ECCENTRIC PLUG VALVE WITH 2" NUT ACTUATOR BY VAL-MATIC
11	1	SS FLOAT BRACKET W/ CORD GRIPS
12	1	INLET PIPING
13	3	ADJUSTABLE PIPE STAND, FLG STYLE, FOR 3 in DIP
14	1	2" SCH40 PVC DRAIN PIPE W/ CHECK VALVE
15	1	3" ELECTROMAGNETIC FLOW METER WITH REMOTE MOUNTED AMPLIFIER BY BADGER
16	3	3" SCH80 PVC 90
17	4	3" SCH80 PVC COUPLING
18	10	3" SCH80 PVC FLG X SLP
19	2	3" SCH80 PVC 0'-6"
20	1	3" SCH80 PVC TEE
21	1	3" SCH80 PVC 1'-2"
22	2	3" SCH80 PVC 2'-0"
23	2	3" SCH80 PVC 2'-6"
24	5	FLEXIBLE PIPE CONNECTOR MEETS ASTM A-923
25	2	HOMA CH436/38/2/3 SUBMERSIBLE PUMP WITH AUTOCOUPLING
26	2	1" 304SS UPPER GUIDE RAIL BRACKET
27	2	2 1//2" SCH80 PVC FLANGE
28	2	3" X 2 1/2" SCH80 PVC BUSHING
29	2	2 1/2" SCH40 PVC 0'-6"
30	2	3" SCH40 PVC 8'-0"
31	2	3" SCH80 PVC 4'-6"
32	4	1" 304SS GUIDE RAIL

PUMP SYSTEM CHARACTERISTICS		
DESCRIPTION	SINGLE	PARALLEL
DESIGN FLOW	90 gpm	110 gpm
TOTAL DYNAMIC HEAD	64 ft	72 ft
STATIC HEAD	45 ft	45 ft
FORCE MAIN LENGTH	1885 ft	1885 ft
MANUFACTURER	HOMA	HOMA
MODEL NUMBER	CH436/38/2/3	CH436/38/2/3
HORSE POWER	3.0 hp	3.0 hp
FULL LOAD AMPS	8.2 Amps	8.2 Amps
MAX PUMP SPEED	3450 rpm	3450 rpm
AVAILBLE POWER SUPPLY	230 Volt	230 Volt
AVAILBLE POWER SUPPLY	3 Phase	3 Phase
NUMBER OF PUMPS	1	2
FREQUENCY	60 Hz	60 Hz

PROJECT SPECIFIC ELEVATIONS	
DESCRIPTION	VALUE (FT)
FINISH GRADE/RIM ELEV.	1741 ft
WET WELL FLOOR ELEV.	1729 ft
TOTAL MANHOLE DEPTH	12 ft
INVERT (IN) DEPTH	4 ft

ACCESS COVER LOADING CRITERIA (SPECIFY ONLY	
PEDESTRIAN LOADING (pedestrian, non-vehicular, uniform 300 lbc./sq/ft/ live load)-Watertight/Gastight	X
INCIDENTAL H-20 LOADING (off street, sidewalk, and low speed, non-impact areas of parking lots, 16,000 lbs./sq.ft. dual wheel live load, 0% impact)-Watertight/gastight	
H-20 FULL TRAFFIC LOADING (in street, 16,000 lbs./sq.ft. dual wheel live load, 30% impact)	

Copyright Information ©2011 Jensen Precast All Rights Reserved. All materials appearing as Jensen Precast documents and the like are propriety work product and are protected under U.S. copyright and other laws. Unless in conjunction with business conducted with Jensen Precast, any use of Jensen Precast work product without express, written consent is prohibited and recipient is prohibited from distributing any and all work product to non-approved third parties under penalty of civil action.

PROJECT: GROUNDWATER EXTRACTION STATION
MECHANICAL DRAWINGS
DATE: 11.4.13 | DRAWN BY: BMP | SHEET NO: 1 of 2

JENSEN ENGINEERED SYSTEMS
825 STENERI WAY, SPARKS, NV 89431
JensenEngineeredSystems.com
(855) 468-5600

C:\Vault\Jobs\2013\Groundwater Extraction Station\Groundwater Extraction Station.iam

HENDERSON GROUNDWATER EXTRACTION DUPLEX LIFT STATION

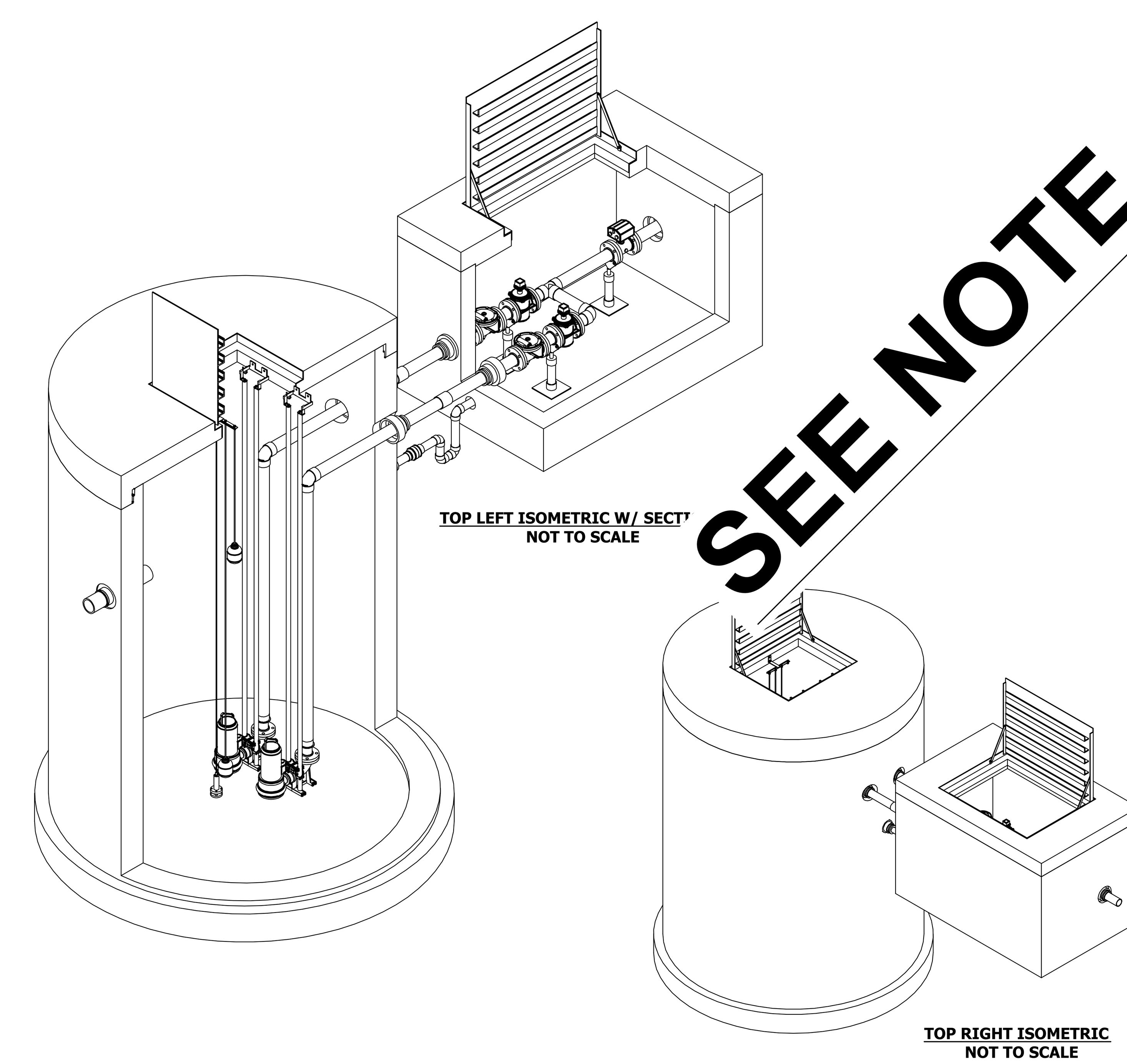

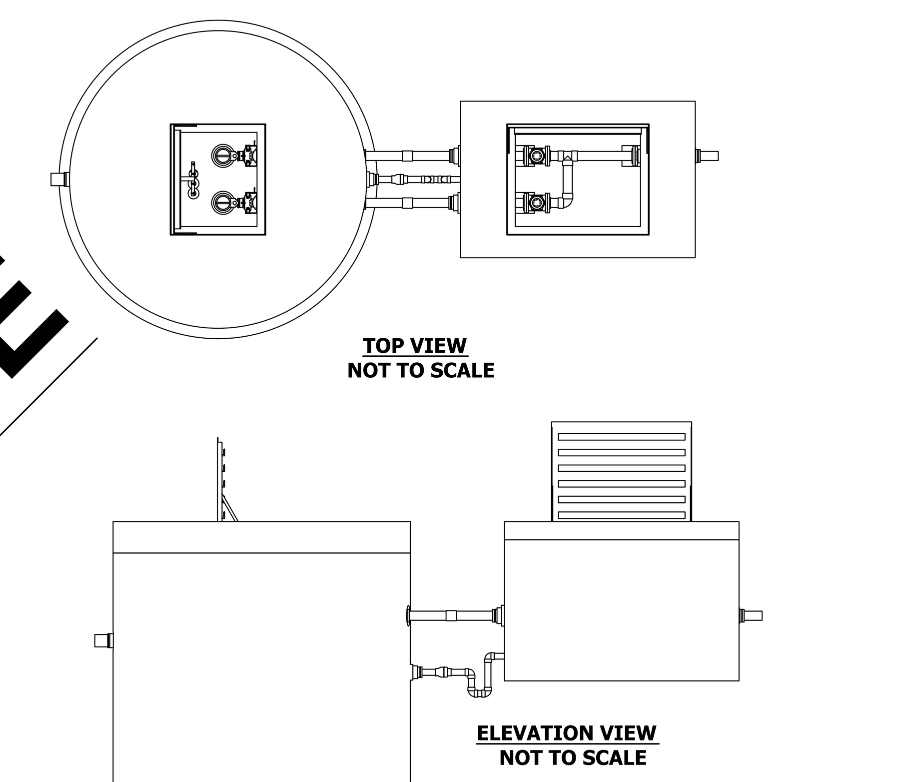

DISCLAIMERS, INCLUDING BUT NOT LIMITED TO :
1) ELEVATIONS SHOWN ON THESE DRAWINGS WERE PROVIDED BY OTHERS. ANY CHANGE GREATER THAN 0.1 FT. REQUIRES ENGINEER APPROVAL.
2) JENSEN PRECAST ASSUMES NO RISK FOR DISCREPANCIES BETWEEN THIS DRAWING AND THE ACTUAL ELEVATIONS/DIMENSIONS IN THE FIELD.
3) THE SPECIFIED PUMPS ARE DESIGNED TO OPERATE AT THE DESIGN POINT SHOWN, BUT THE SYSTEM CHARACTERISTICS HAVE NOT BEEN VERIFIED BY JENSEN PRECAST.
4.) OWNER MUST CONFIRM THE SUITABILITY OF THIS DESIGN PRIOR TO PRODUCTION.
5.) CONTRACTOR MUST PROVIDE ALL INCIDENTAL MATERIAL AND LABOR FOR A COMPLETE OPERATIONAL SYSTEM.
6.) ALL DUCTILE IRON PIPE TO BE CEMENT LINED AND SHOP PRIME COATED. ALL BURIED PIPE MUST BE POLYETHYLENE ENCASED. ALL GASKETS TO BE FULL FACE 1/8" THICK NEOPRENE RUBBER. NUTS AND BOLTS IN WET WELL TO BE STAINLESS STEEL.
7.) CONTRACTOR MUST VERIFY PIPE MATERIAL, LOCATION, SIZE & INVERT ELEVATION OF INLET PIPING. PIPE DESIGNED BY OTHERS.
8.) FOUNDATION, SUBGRADE, AND BACKFILL DESIGNED BY OTHERS.

Copyright Information ©2011 Jensen Precast All Rights Reserved. All materials appearing as Jensen Precast documents and the like are propriety work product and are protected under U.S. copyright and other laws. Unless in conjunction with business conducted with Jensen Precast, any use of Jensen Precast work product without express, written consent is prohibited and recipient is prohibited from distributing any and all work product to non-approved third parties under penalty of civil action.

PROJECT: GROUNDWATER EXTRACTION STATION
TITLE PAGE
DATE: 11.4.13 | DRAWN BY: BMP | SHEET NO: 1 of 2

JENSEN ENGINEERED SYSTEMS
825 STENERI WAY, SPARKS, NV 89431
JensenEngineeredSystems.com
(855) 468-5600
C:\Vault\Jobs\2013\Groundwater Extraction Station\Groundwater Extraction Station.iam

1 NOTE:

ANY CHANGES[illegible]MODIFICATIONS TO LIFT STATION AND AIR STRIPPER DESIGN WILL BE ISSUED BY VENDOR.
SEE UPDATED SHOP DRAWINGS PROVIDED BY VENDOR.

A Lift Station Details
Not to Scale

QED Environmental Systems — **Figure 4 Typical Gravity Discharge Piping**

NOTE:
1. CENTER LINE OF WATER OUT (ITEM 1) TO CENTER LINE OF DRAIN CONNECTOR (ITEM 9) TO BE 27" – 6 TRAY 18" – 4 TRAY
(DIMENSIONS ARE APPROXIMATE--REQUIRES SOME ADJUSTMENT AS NECESSARY BASED UPON SUMP PRESSURES AND WATER FLOWS. ASSUMES STANDARD OPERATING CONDITIONS.)

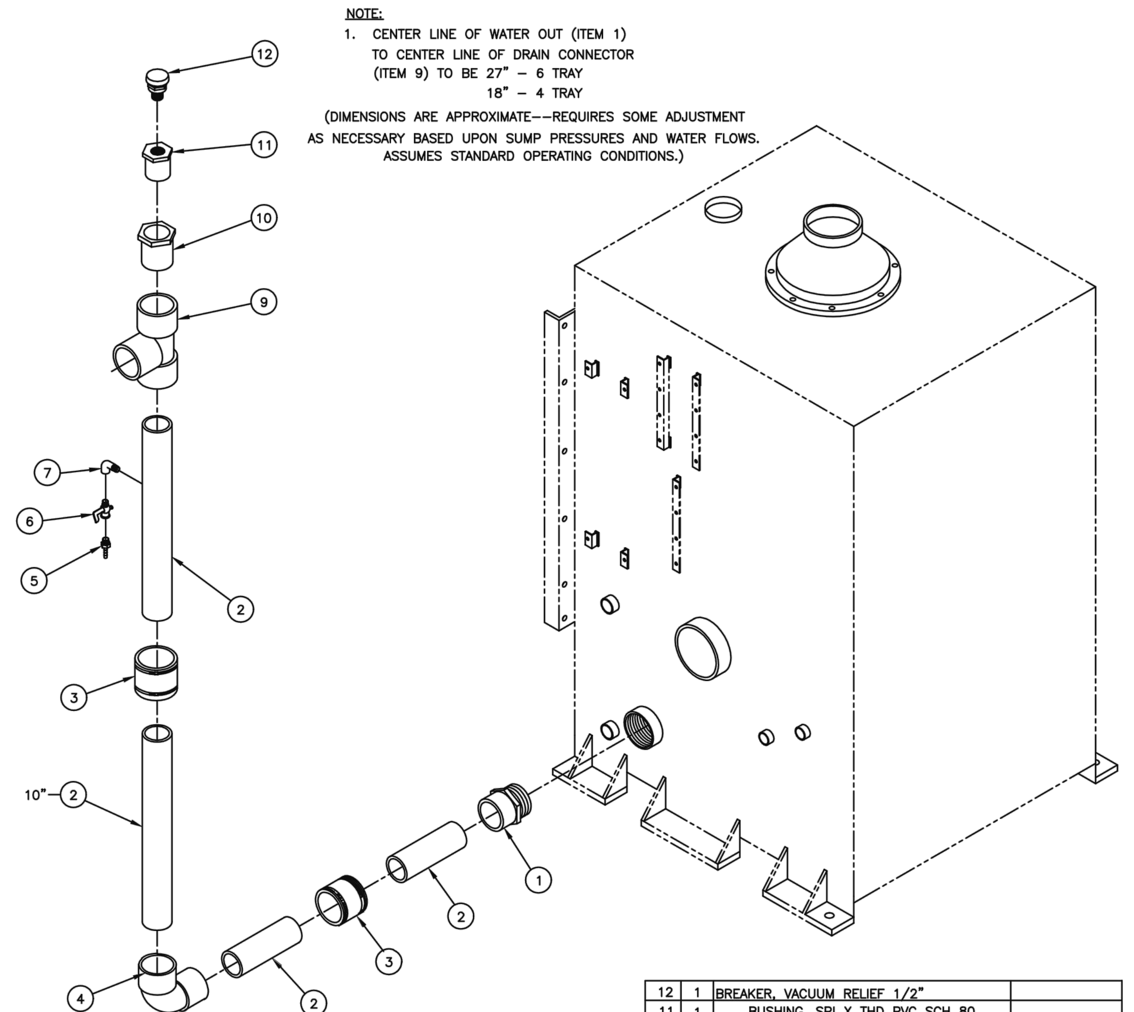

ITEM	QTY	DESCRIPTION	PART #
12	1	BREAKER, VACUUM RELIEF 1/2"	
11	1	BUSHING, SPI X THD PVC SCH 80	
10	1	BUSHING, REDUCER SPI. X SOC.	
9	1	TEE, SOCKET PVC SCH 80	
8			
7	1	ELBOW, STREET 1/8" FPT BRASS	
6	1	COCK, SHUTOFF 1/8"MPT X 1/8"FPT BRASS	
5	1	BARB, 1/8"MPT X 3/16" BARB	
4	1	ELBOW, 90 DEGREE PVC SCH 80 SOCKET	
3	2	FERNCO, FLEXIBLE PVC	
2	TBD	PIPE, PVC SCH 80	
1	1	ADAPTER, PVC SCH 80	

UNLESS OTHERWISE SPECIFIED, DIMENSIONS ARE IN INCHES AND INCLUDE PLATING REMOVE ALL BURRS. TOLERANCES .XX+/-.01 FRACT +/-1/64 .XXX+/-.005 ANGLES+/-1/2 OTHER TOLERANCES AS SPECIFIED
EZ-TRAY (24.X) | NEXT ASS'Y | USED ON
DRAWN BY: MEB | DATE: 10/29/99 | CHECKED BY | DATE | APPROVED BY | DATE | MFG. APPROVAL | MATERIAL | FINISH
QED ENVIRONMENTAL SYSTEMS INC. 6155 JACKSON ROAD, ANN ARBOR, MI.
TITLE: GRAVITY DRAIN ASSEMBLY/BOM/KIT
DRAWING NUMBER: eztgravdis | REV | SCALE N.T.S. | SHEET 1 OF 1

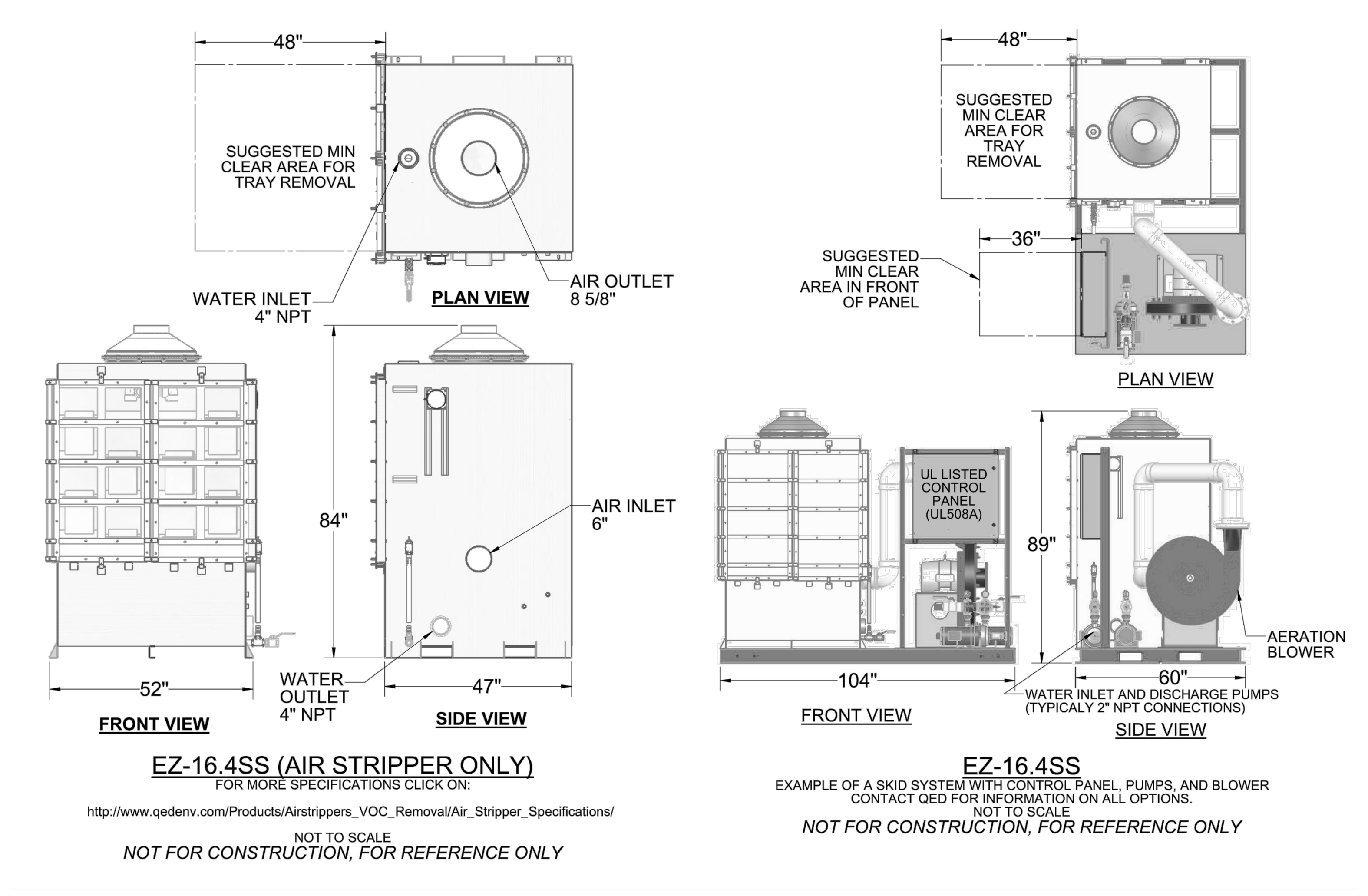

B Tray Air Stripper Details
Not to Scale

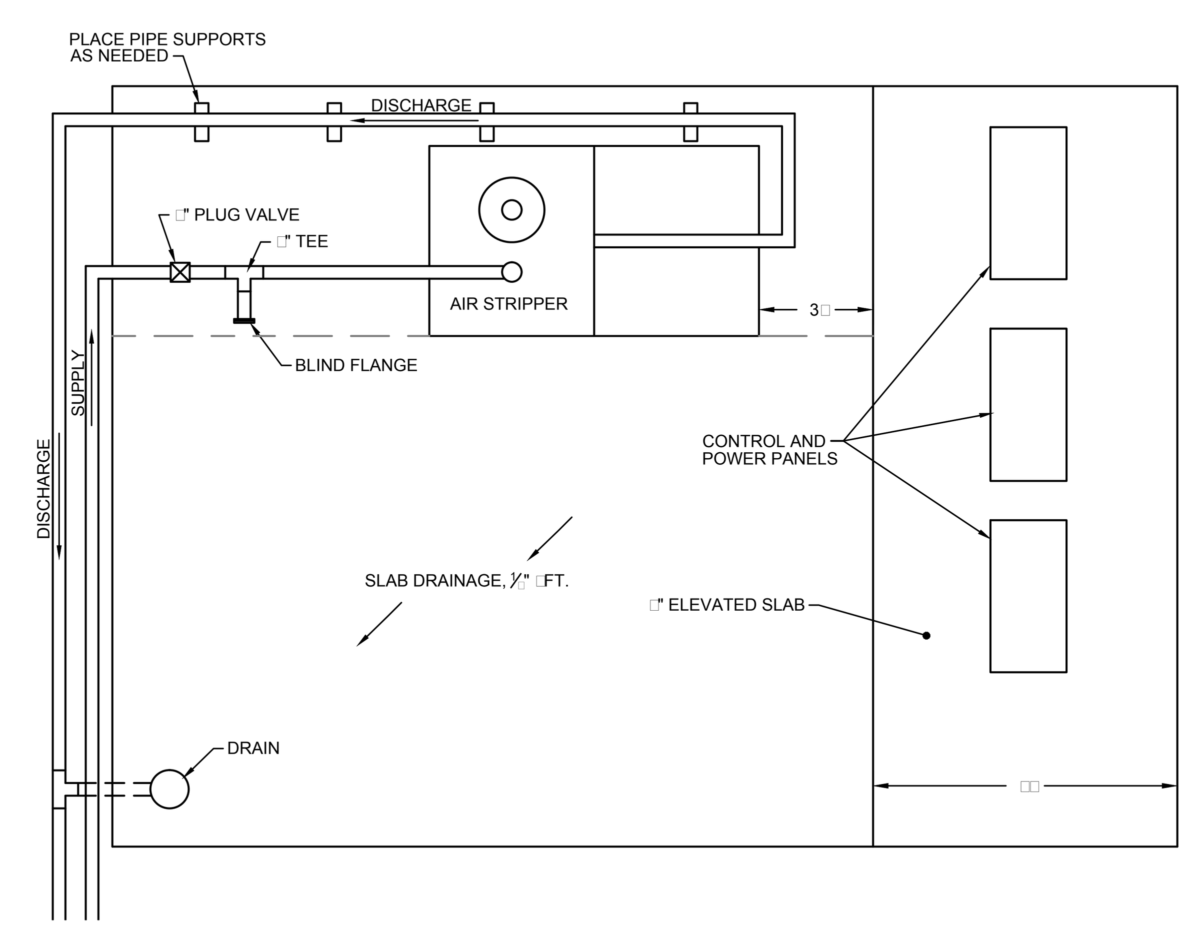

1 C Conceptual Air Stripper Slab
NOT TO SCALE

NOTE:

SEE DRAWINGS C-22, C-23 AND C-2[illegible] FOR ACTUAL E[illegible]UIPMENT PAD SLAB DETAILS.

Attention:
0 — 1"
If this scale bar does not measure 1" then drawing is not original scale.

NO.	DATE	ISSUE[illegible]REVISION	APP
1	12[illegible]13[illegible]13	VENDOR REVISIONS NOTE, SLAB DETAIL	GAO
0	11[illegible]21[illegible]13	ISSUED FOR BIDDING	MGR

Designed: M. Ruetten
Checked: M. Ruetten
Drawn: [illegible]. Curtin
Submittal Date: 11[illegible]21[illegible]2013

GEI Consultants
31[illegible]9 Voyager Drive
Green Bay, Wisconsin [illegible]311
920-[illegible]-[illegible]200

TITANIUM METALS CORPORATION
1[illegible]1 NORTH WATER STREET
BLAC[illegible] MOUNTAIN INDUSTRIAL CENTER
HENDERSON, NEVADA [illegible]901[illegible]
GEI Project 13230[illegible]0

GROUNDWATER REMEDIATION E[illegible]TRACTION SYSTEM

LIFT STATION [illegible] TRAY AIR STRIPPER DETAILS

DWG. NO. C-1[illegible]
SHEET NO. 1[illegible] of 2[illegible]

J:\Landfills\Timet\Recharge[illegible]Trenches\E[illegible]TRACTION[illegible]SYSTEM[illegible]REV-2\C1[illegible]Rev2[illegible]Lift-Station[illegible]Air Stripper[illegible]Details

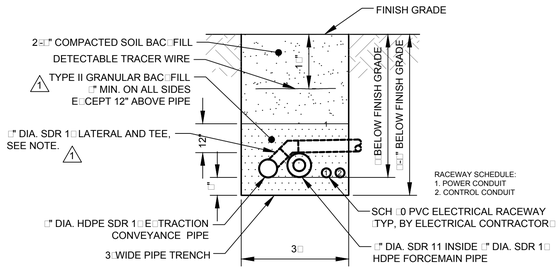

B Extraction Conveyance □ Forcemain Pipe Trench Detail

Scale: 1" □2□

NOTE:
E□TRACTION WELLS EW□al-01, 02, 03, 0□□ 0□WILL HAVE A □" HDPE SDR 1□LATERAL IN TRENCH TO CONNECT TO □" HDPE SDR 1□ CONVEYANCE PIPE WITH A □"□□" TEE.

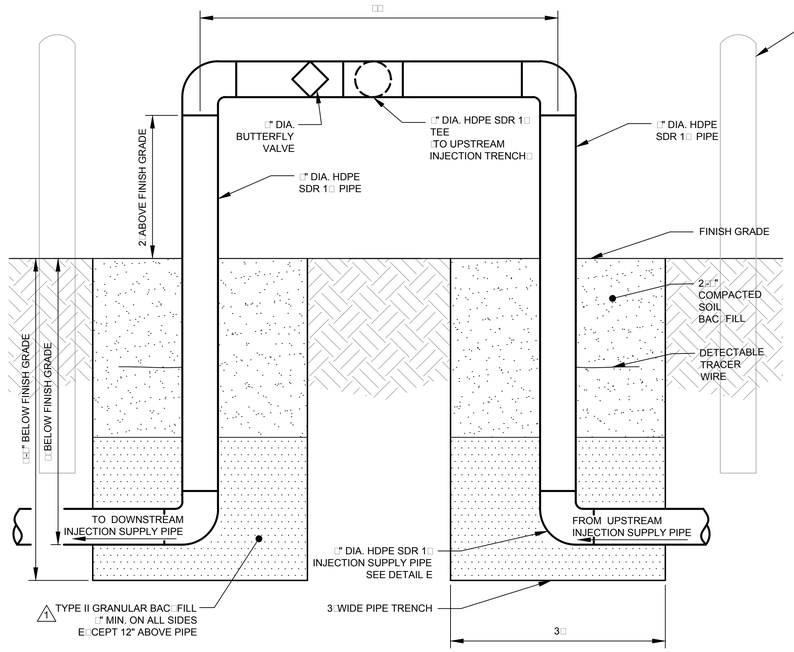

C Injection Supply Pipe Header Assembly Detail

Scale: 1" □1□

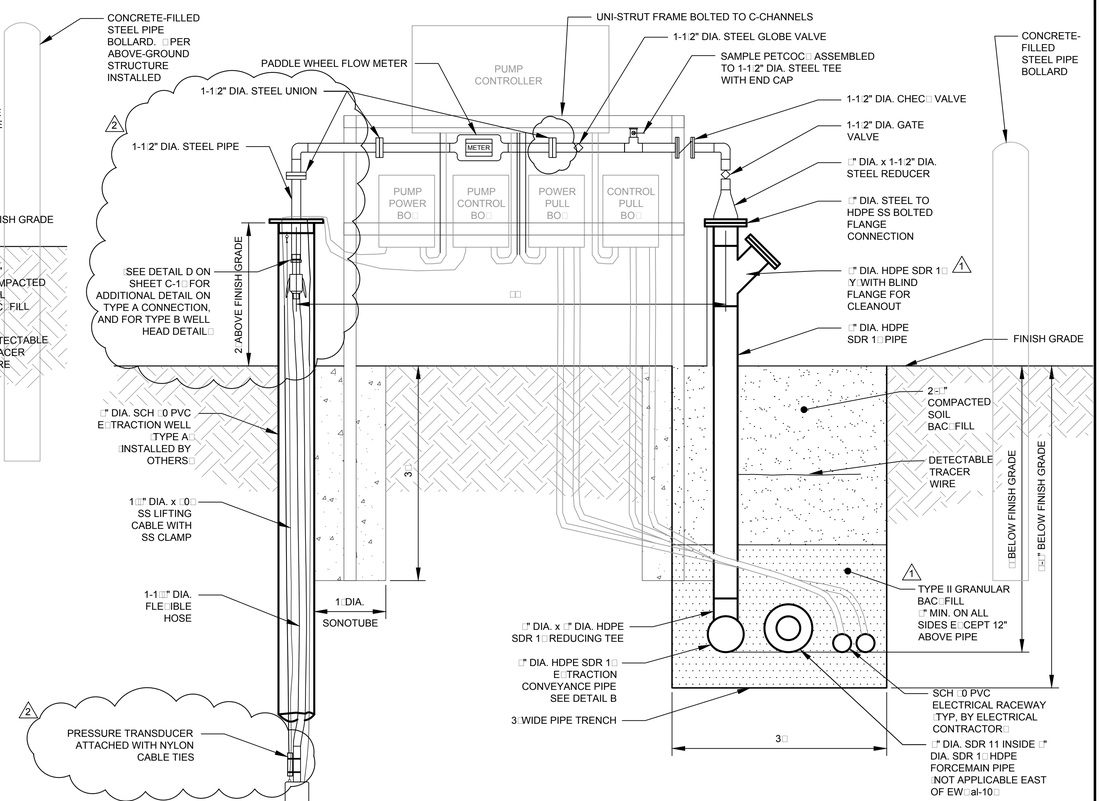

A Standard Extraction Well Assembly Detail, Type A □□-in Well Casing□

Scale: 1" □1□

NOTE:
CONTRACTOR TO PROVIDE NECESSARY SUPPORT FOR PIPE □ ELECTRICAL E□UIPMENT.
PIPE CONTRACTOR SHALL COORDINATE WITH ELECTRICAL CONTRACTOR FOR SI□ING SUPPORT FRAMES AND LOCATION OF CONTROL PANEL AND BREA□OUT BO□ES.
ELECTRICAL E□UIPMENT SHOWN FOR REFERENCE ONLY.

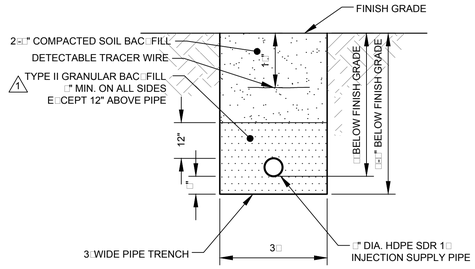

E Injection Supply Pipe Trench Detail

Scale: 1" □2□

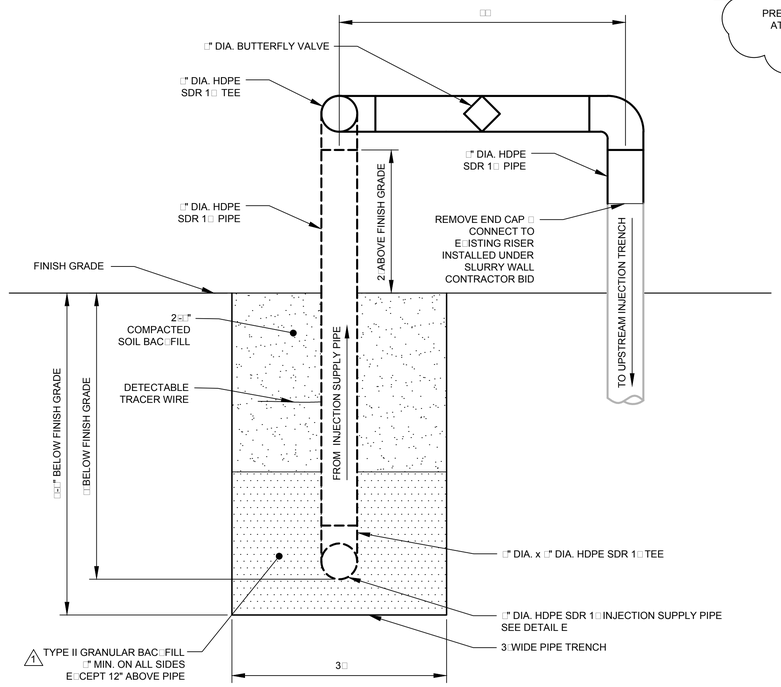

D Injection Pipe Lateral Assembly Detail

Scale: 1" □1□

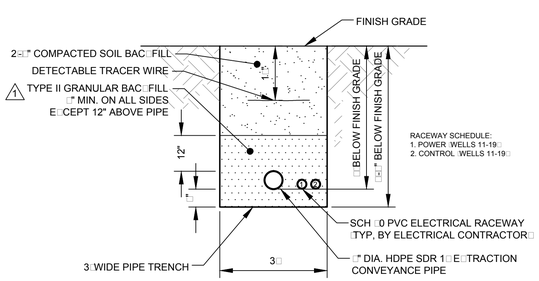

H Extraction Conveyance Pipe Trench Detail

Scale: 1" □2□

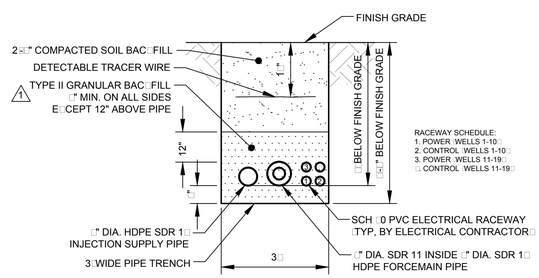

G Injection Supply Pipe □ Forcemain Trench Detail

Scale: 1" □2□

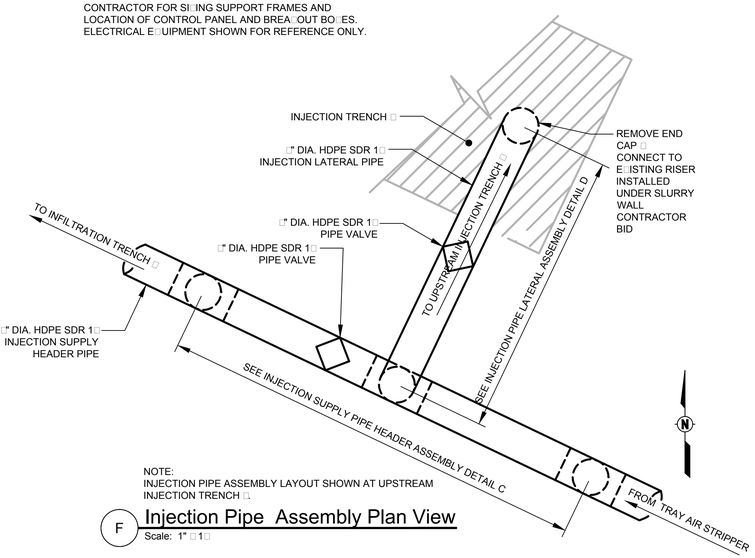

NOTE:
INJECTION PIPE ASSEMBLY LAYOUT SHOWN AT UPSTREAM INJECTION TRENCH □.

F Injection Pipe Assembly Plan View

Scale: 1" □1□

NO.	DATE	ISSUE/REVISION	APP
2	1□/□1/□1□	ADDITIONAL WELL HEAD DETAILS	GAO
1	12/13/13	REVISED GRANULAR BAC□FILL TYPE, ADDED CLEANOUT, ADDED LATERAL FOR WELLS E□Wal-01, 02, 03,0□/□□/0□	GAO
0	11/21/13	ISSUED FOR BIDDING	MGR

Attention: 0 — 1" If this scale bar does not measure 1" then drawing is not original scale.

Designed: M. Ruetten
Checked: M. Ruetten
Drawn: □. Curtin
Submittal Date: 11/21/2013

GEI Consultants
31□9 Voyager Drive
Green Bay, Wisconsin □311
920-□□+-□200

TITANIUM METALS CORPORATION
1□1 NORTH WATER STREET
BLAC□ MOUNTAIN INDUSTRIAL CENTER
HENDERSON, NEVADA □901□

GEI Project 13230□0

GROUNDWATER REMEDIATION
E□TRACTION SYSTEM

TRENCH AND PIPING DETAILS

DWG. NO. C-1□

SHEET NO. 1□ of 2□

J:\Landfills\Timet\Recharge□Trenches\E□TRACTION□SYSTEM□REV-2\C1□Rev2□Tr□□□Pipe□Details

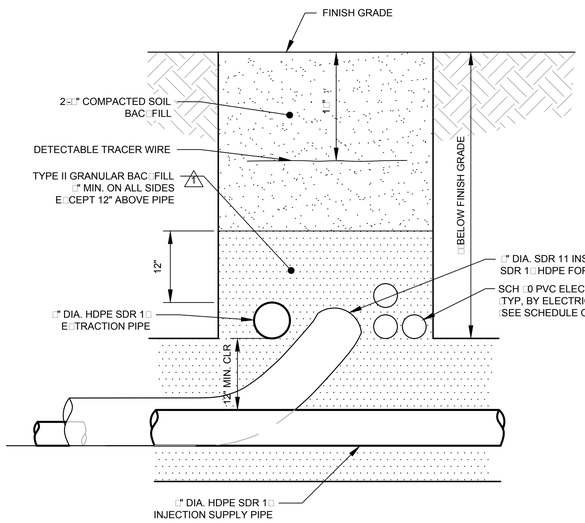

□looking west□

Extraction Conveyance, Injection Supply □ Forcemain Pipe Crossing Detail

A Scale: 1" □1□

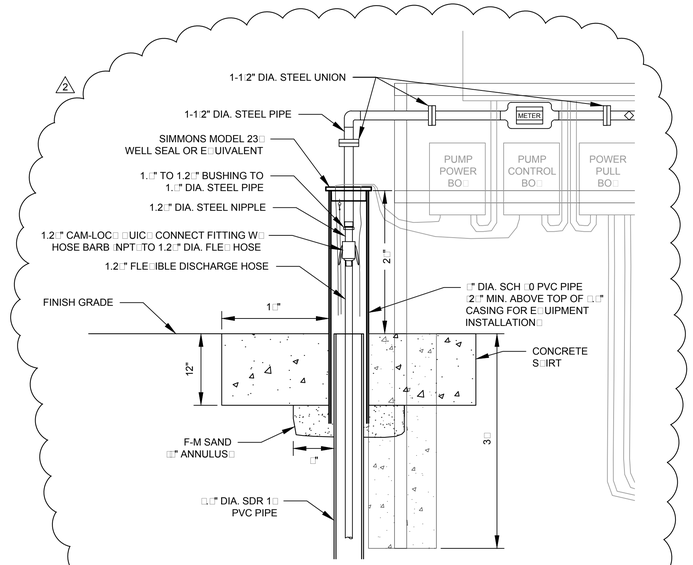

Extraction Well Head Detail, Type B

□□.□" SDR 1□ PVC to □" Sch □0 PVC Well Casing□

D Scale: 1" □1□

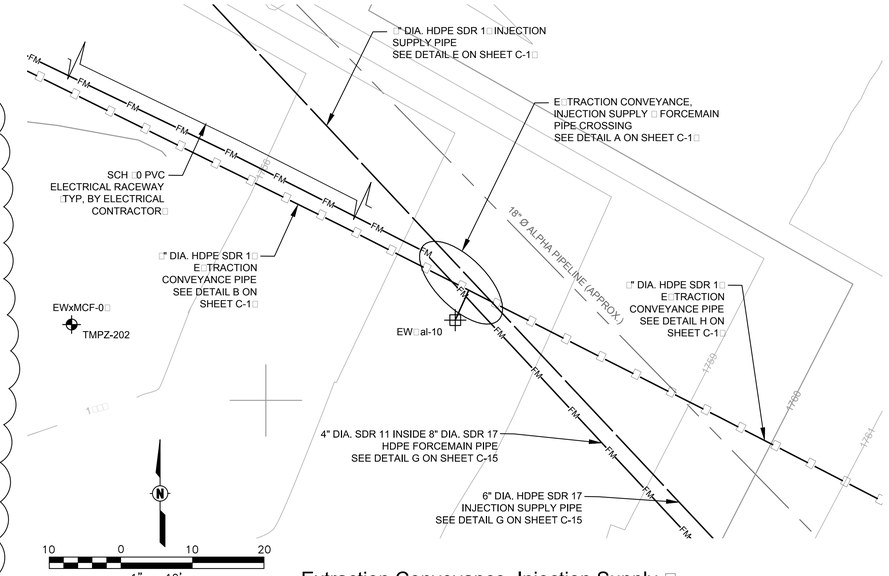

Extraction Conveyance, Injection Supply □ Forcemain Pipe Crossing Plan View

B Scale: 1" □10□

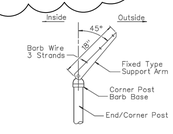

CORNER POST SUPPORT ARM

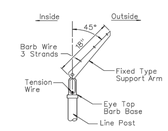

LINE POST SUPPORT ARM

NOTES:

1. CHAIN-LINK FENCING SHALL CONSIST OF GALVANIZED CHAIN-LINK FABRIC ON STEEL POSTS (TUBULAR OR C-SECTION).
2. ALL POSTS SHALL BE SET IN CLASS A OR AA CONCRETE.
3. ALL POSTS TOPS SHALL BE FITTED WITH SUITABLE FINIALS.
4. BRACES SHALL BE SPACED APPROXIMATELY 12" BELOW TOP OF TERMINAL POSTS AND SHALL EXTEND FROM END, GATE OR CORNER POSTS TO FIRST ADJACENT LINE POST.
5. ALL FITTINGS SHALL BE HOT-DIPPED GALVANIZED MALLEABLE, CAST IRON, OR PRESSED STEEL.
6. FABRIC SHALL BE FASTENED TO LINE POSTS WITH FABRIC BANDS SPACED APPROXIMATELY 14" APART, AND TO TOP TENSION WIRE AND BOTTOM TENSION WIRE WITH HOG RINGS OR TIE WIRES SPACED APPROXIMATELY 24" APART.
7. FOR ALTERNATE POST AND BRACE RAIL DETAILS SEE SHEETS R-6.3.1 THRU R-6.3.3.
8. CLEARANCE BETWEEN BOTTOM OF GATE AND ORIGINAL GROUND SHALL BE 1" MAXIMUM ON TORTOISE FENCES ONLY.
9. HARDWARE CLOTH TO BE ATTACHED TO CHAIN LINK FENCE FABRIC WITH HOG RINGS AT 12" MAXIMUM SPACING TO BE INSTALLED OUTSIDE OF PIT. DITCH SHALL BE BACKFILLED WITH EXCAVATED MATERIAL AND COMPACTED AS DIRECTED BY THE ENGINEER.

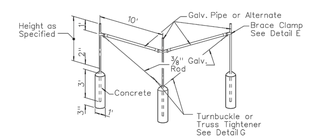

CORNER BRACE FOR CHAIN LINK FENCE

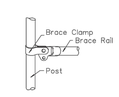

DETAIL E

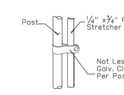

DETAIL F

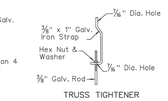

TRUSS TIGHTENER

DETAIL G

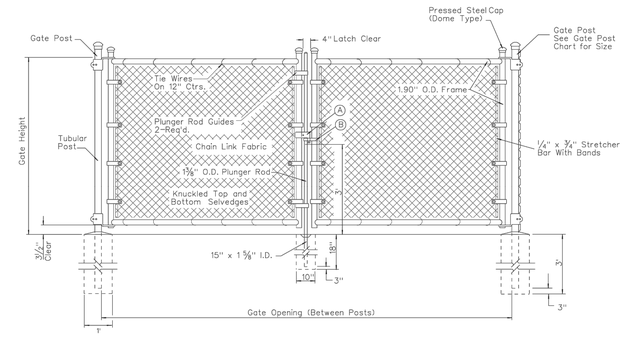

DOUBLE SWING GATE

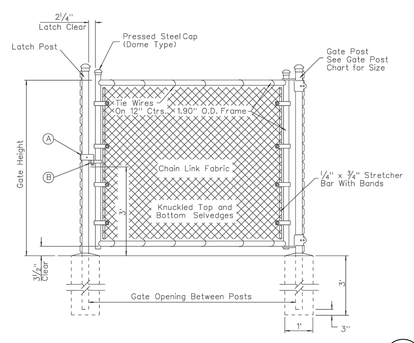

SINGLE SWING GATE

NOTE: ⅜" Adjustable Truss Rods Shall Be Installed on All Gates Over 6' in Width. See Detail B, Sheet R-6.1.3, For Truss Tightener Detail.

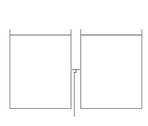

FRAME CONSTRUCTION GATES THRU 12' OPENING

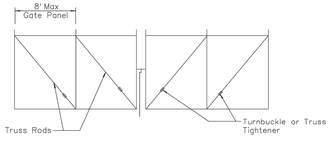

FRAME CONSTRUCTION GATES OVER 12' to 32' OPENING

FRAME CONSTRUCTION GATES THRU 6' OPENING

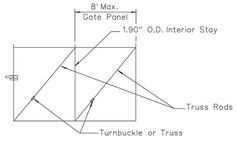

FRAME CONSTRUCTION GATES OVER 6' to 18' OPENING

Nevada Department of Transportation

C □High Chain Link Fence

Not to Scale

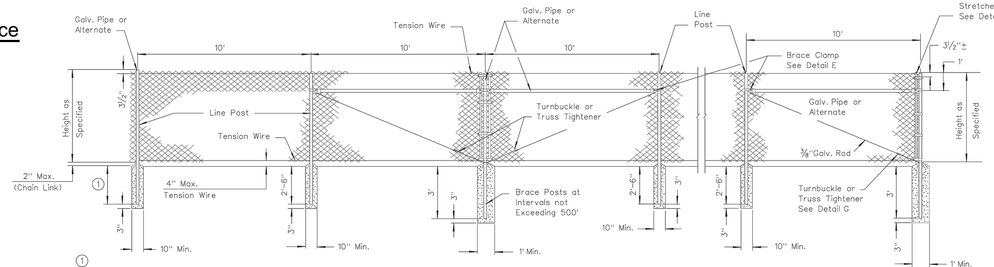

TYPICAL CHAIN LINK FENCE

GATE POST

GATE OPENING IN FEET		ROUND GATE POSTS O.D. DIA. (INCHES)	MIN. WEIGHT POUNDS/LIN. FT.	
SINGLE GATE	DOUBLE GATE		CLASS 1	CLASS 2
Up to 6	Up to 12	2.875	5.79	4.64
7 thru 13	13 thru 26	4.000	9.11	6.56
14 thru 18	27 thru 36	6.625	18.97	—

NOTES:

1. DIAMETERS AND MASS LISTED ABOVE ARE MINIMUMS. LARGER SIZES MAY BE USED ON APPROVAL OF ENGINEER.
2. 3½" x 3½" TYPE II POST (4.65 LBS/FT) CAN BE USED IN PLACE OF 2.875" O.D. ROUND GATE POST.
3. CONCRETE SHALL BE CLASS A OR AA.

SIZE OF POSTS

	CORNER, END, PULL AND BRACE POSTS					LINE POSTS					BRACE RAIL				
FENCE HEIGHT	ROUND PIPE O.D.	MIN. WT. (LBS/L.F.) CLASS 1	MIN. WT. (LBS/L.F.) CLASS 2	TYPE II	MIN. WT. (LBS/L.F.)	ROUND PIPE O.D.	MIN. WT. (LBS/L.F.) CLASS 1	MIN. WT. (LBS/L.F.) CLASS 2	C-SECTION DIMENSIONS	MIN. WT. (LBS/L.F.)	ROUND PIPE O.D.	MIN. WT. (LBS/L.F.) CLASS 1	MIN. WT. (LBS/L.F.) CLASS 2	C-SECTION DIMENSIONS	MIN. WT. (LBS/L.F.)
3'to 6'	2.375"	3.65	2.64	3.5"x3.5"	4.85	1.900"	2.72	1.94	1.875"x1.625"	1.60	1.660"	2.27	1.45	1.625"x1.250"	1.35

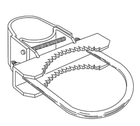

HINGE FOR TUBULAR POSTS

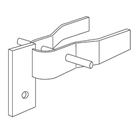

Ⓐ LOCK KEEPER

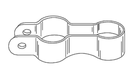

Ⓑ LOCK KEEPER GUIDE

Attention:

0 1"

If this scale bar does not measure 1" then drawing is not original scale.

NO.	DATE	ISSUE/REVISION	APP
2	1□/□1□	ADDED WELL HEAD DETAIL	GAO
1	12/13/13	REVISED GRANULAR BAC□FILL TYPE	GAO
0	11/21/13	ISSUED FOR BIDDING	MGR

Designed: M. Ruetten
Checked: M. Ruetten
Drawn: □. Curtin
Submittal Date: 11/21/2013

GEI Consultants
31□9 Voyager Drive
Green Bay, Wisconsin □311
920-□□□-□200

TITANIUM METALS CORPORATION
1□1 NORTH WATER STREET
BLAC□ MOUNTAIN INDUSTRIAL CENTER
HENDERSON, NEVADA □901□

GEI Project 13230□0

GROUNDWATER REMEDIATION E□TRACTION SYSTEM

TRENCH AND PIPING DETAILS

DWG. NO. C-1□

SHEET NO. 1□ of 2□

J:\Landfills\Timet\Recharge_Trenches\E□TRACTION SYSTEM\REV-2\C1□Rev2_Tr□□Pipe Details

PANEL:	PDP-101	LOCATION:	LIFT STATION
VOLTAGE:	120/240V 1-PHASE, 3-WIRE	MOUNTING:	SURFACE MOUNT
BUS:	100 A COPPER	REMARKS:	STAINLESS STEEL ENCLOSURE
MAIN:	80A 2P MAIN CIRCUIT BREAKER 10 KAIC FULLY-RATED	FEEDER:	LIFT STATION CONTROL PANEL
TYPE:	28 NEMA 3R LTG. & APPL. BRANCH PANELBOARD	SERVES:	

CKT	CODE	CIRCUIT NAME	CABLE	AMP	POLE	KVA	PHASE	CKT	CODE	CIRCUIT NAME	CABLE	AMP	POLE	KVA
1	Y	WELL PUMP EWQAL-01	2-1/C #12 AWG	15	2	0.32	A	2	Y	WELL PUMP EWQAL-02	2-1/C #12 AWG	15	2	0.32
3	Y		W/ #12 AWG GND			0.32	B	4	Y		W/ #12 AWG GND			0.32
5	Y	WELL PUMP EWQAL-03	2-1/C #12 AWG	15	2	0.32	A	6	Y	WELL PUMP EWQAL-04	2-1/C #12 AWG	15	2	0.32
7	Y		W/ #12 AWG GND			0.32	B	8	Y		W/ #12 AWG GND			0.32
9	Y	WELL PUMP EWQAL-05	2-1/C #12 AWG	15	2	0.32	A	10	Y	WELL PUMP EWQAL-06	2-1/C #10 AWG	15	2	0.32
11	Y		W/ #12 AWG GND			0.32	B	12	Y		W/ #10 AWG GND			0.32
13	Y	WELL PUMP EWQAL-07	2-1/C #10 AWG	15	2	0.32	A	14	Y	WELL PUMP EWQAL-08	2-1/C #10 AWG	15	2	0.32
15	Y		W/ #10 AWG GND			0.32	B	16	Y		W/ #10 AWG GND			0.32
17	Y	WELL PUMP EWQAL-09	2-1/C #8 AWG	15	2	0.32	A	18	Y	WELL PUMP EWQAL-10	2-1/C #8 AWG	15	2	0.32
19	Y		W/ #8 AWG GND			0.32	B	20	Y		W/ #8 AWG GND			0.32
21		SPARE		20	1	0.00	A	22		SPACE				0.00
23		SPARE				0.00	B	24		SPACE				0.00
25		SPACE				0.00	A	26		SPACE				0.00
27		SPACE				0.00	B	28		SPACE				0.00

PHASE A CONNECTED LOAD (KVA):	3.20		
PHASE B CONNECTED LOAD (KVA):	3.20	TOTAL CONNECTED 1PH LOAD (KVA):	6.40

CODE	LOAD TYPE	CONNECT	DF CALCULATIONS	TOTAL DEMAND		
W	LIGHTING	0.00	125%			0.00
X	NON CONT RECEPTACLES	0.00	10+(X-10)*.5			0.00
Y	MOTORS	6.40	100%			6.40
	LRGST MOTOR	0.64	25%			0.16
C	CONTINUOUS (MISC)	0.00	125%			0.00
N	NON-CONTINUOUS (MISC)	0.00	100%	A	B	0.00
TOTAL DEMAND LOAD (KVA):				3	3	7
TOTAL DEMAND 1PH AMPERES:				28	28	28

PANEL:	PDP-102	LOCATION:	AIR STRIPPER
VOLTAGE:	120/240V 1-PHASE, 3-WIRE	MOUNTING:	SURFACE MOUNT
BUS:	100 A COPPER	REMARKS:	STAINLESS STEEL ENCLOSURE
MAIN:	80A 2P MAIN CIRCUIT BREAKER 10 KAIC FULLY-RATED	FEEDER:	MDP-101
TYPE:	28 NEMA 3R LTG. & APPL. BRANCH PANELBOARD	SERVES:	

CKT	CODE	CIRCUIT NAME	CABLE	AMP	POLE	KVA	PHASE	CKT	CODE	CIRCUIT NAME	CABLE	AMP	POLE	KVA
1	Y	WELL PUMP EWQAL-11	1-2/C #8 AWG	15	2	0.29	A	2	Y	WELL PUMP EWQAL-12	1-2/C #8 AWG	15	2	0.29
3	Y		W/ #8 AWG GND			0.29	B	4	Y		W/ #8 AWG GND			0.29
5	Y	WELL PUMP EWQAL-13	1-2/C #8 AWG	15	2	0.29	A	6	Y	WELL PUMP EWQAL-14	1-2/C #10 AWG	15	2	0.29
7	Y		W/ #8 AWG GND			0.29	B	8	Y		W/ #10 AWG GND			0.29
9	Y	WELL PUMP EWQAL-15	1-2/C #12 AWG	15	2	0.29	A	10	Y	WELL PUMP EWQAL-16	1-2/C #8 AWG	15	2	0.29
11	Y		W/ #12 AWG GND			0.29	B	12	Y		W/ #8 AWG GND			0.29
13	Y	WELL PUMP EWQAL-17	1-2/C #8 AWG	15	2	0.29	A	14	Y	WELL PUMP EWQAL-18	1-2/C #8 AWG	15	2	0.29
15	Y		W/ #8 AWG GND			0.29	B	16	Y		W/ #8 AWG GND			0.29
17	Y	WELL PUMP EWQAL-19	1-2/C #8 AWG	15	2	0.29	A	18	N	MAIN CONTROL PANEL	1-2/C #10 AWG W/#10 AWG GND	30	1	2.35
19	Y		W/ #8 AWG GND			0.29	B	20		SPARE		20	1	0.00
1 21		SPARE	1-2/C #8 AWG	15	2	0.00	A	22		SPACE				0.00
23		(FUTURE WELL PUMP EWQAL-20)	W/ #8 AWG GND			0.00	B	24		SPACE				0.00
25		SPACE				0.00	A	26		SPACE				0.00
27		SPACE				0.00	B	28		SPACE				0.00

PHASE A CONNECTED LOAD (KVA):	4.96		
PHASE B CONNECTED LOAD (KVA):	2.61	TOTAL CONNECTED 1PH LOAD (KVA):	7.57

CODE	LOAD TYPE	CONNECT	DF CALCULATIONS	TOTAL DEMAND		
W	LIGHTING	0.00	125%			0.00
X	NON CONT RECEPTACLES	0.00	10+(X-10)*.5			0.00
Y	MOTORS	5.22	100%			5.22
	LRGST MOTOR	0.58	25%			0.15
C	CONTINUOUS (MISC)	0.00	125%			0.00
N	NON-CONTINUOUS (MISC)	2.35	100%	A	B	2.35
TOTAL DEMAND LOAD (KVA):				5	3	8
TOTAL DEMAND 1PH AMPERES:				42	22	32

NOTES

1. REFERENCE GENERAL NOTES ON DWG E4-001.
2. ELECTRICAL CONTRACTOR SHALL FURNISH PANELBOARDS WITH CIRCUIT BREAKERS AS INDICATED. REFERENCE DWG E4-001 FOR INSTALLATION SCOPE OF WORK.

KEYED NOTES

1. ELECTRICAL CONTRACTOR SHALL FURNISH AND INSTALL CONDUCTORS FROM PDP-102 TO JB3 AND TERMINATE IN JB3.

THIS DRAWING WAS PREPARED BY POWER ENGINEERS, INC. FOR A SPECIFIC PROJECT, TAKING INTO CONSIDERATION THE SPECIFIC AND UNIQUE REQUIREMENTS OF THE PROJECT. REUSE OF THIS DRAWING OR ANY INFORMATION CONTAINED IN THIS DRAWING FOR ANY PURPOSE IS PROHIBITED UNLESS WRITTEN PERMISSION FROM BOTH POWER AND POWER'S CLIENT IS GRANTED.

E3-001.DWG

REV	REVISIONS	DATE	DRN	DSGN	CKD	APPD	REFERENCE DRAWINGS	
D	ISSUED FOR USE	01/09/14	CMC	MJB	KTB	RPP		
C	ISSUED FOR BIDDING	11/20/13	CMC	MJB	KTB	RPP		
B	ISSUED FOR BIDDING	11/08/13	CMC	MJB	KTB	RPP		
A	ISSUED FOR BID	11/04/13	CMC	MJB	KTB	RPP	*	*

DSGN	MJB	11/01/13
DRN	CMC	11/01/13
CKD	RPP	11/04/13
SCALE:	NONE	

FOR 22x34 DWG ONLY

POWER ENGINEERS

GEI

TITANIUM METALS CORPORATION
HENDERSON, NEVADA

GROUNDWATER REMEDIATION EXTRACTION SYSTEM
ELECTRICAL PANEL SCHEDULES

JOB NUMBER 132766

REV D

DRAWING NUMBER E3-001

PANEL:	MDP-101	LOCATION:	AIR STRIPPER
VOLTAGE:	480Y/277V 3-PHASE, 4-WIRE	MOUNTING:	SURFACE MOUNT
BUS:	225 A COPPER	REMARKS:	
MAIN:	225 A 3P MAIN CIRCUIT BREAKER 35 KAIC FULLY-RATED	FEEDER:	UTILITY XFMR
TYPE:	18 NEMA 3R LTG. & APPL. BRANCH PANELBOARD	SERVES:	

CKT	CODE	CIRCUIT NAME	CABLE	AMP	POLE	KVA	PHASE	CKT	CODE	CIRCUIT NAME	CABLE	AMP	POLE	KVA
1	N					6.00	A	2	N					5.00
3	N	AIR STRIPPER CONTROL PANEL	3-1/C #8 AWG	35	3	6.00	B	4	N	LIFT STATION CONTROLPANEL	1-3/C #1 AWG	100	3	19.00
5	N		W/ #10 AWG GND			6.00	C	6	N		W/ #4 AWG GND			19.00
7	N	PDP-102	2-1/C #8 AWG	35	2	21.00	A	8						0.00
9	N		W/ #10 AWG GND			11.00	B	10						0.00
11						0.00	C	12						0.00
13						0.00	A	14						0.00
15						0.00	B	16						0.00
17						0.00	C	18						0.00

PHASE A CONNECTED LOAD (KVA):	32.00			
PHASE B CONNECTED LOAD (KVA):	36.00			
PHASE C CONNECTED LOAD (KVA):	25.00	TOTAL CONNECTED 3PH LOAD (KVA):		93.00

CODE	LOAD TYPE	CONNECT	DF CALCULATIONS	TOTAL DEMAND			
W	LIGHTING	0.00	125%	0.00			
X	NON CONT RECEPTACLES	0.00	10+(X-10)*.5	0.00			
Y	MOTORS	0.00	100%	0.00			
	LRGST MOTOR	0.00	25%	0.00			
C	CONTINUOUS (MISC)	0.00	125%	0.00			
N	NON-CONTINUOUS (MISC)	93.00	100%	A	B	C	93.00
TOTAL DEMAND LOAD (KVA):				32	36	25	93
TOTAL DEMAND 3PH AMPERES:				116	130	90	112

NOTES

1. REFERENCE GENERAL NOTES ON DWG E4-001.
2. ELECTRICAL CONTRACTOR SHALL FURNISH PANELBOARDS WITH CIRCUIT BREAKERS AS INDICATED. REFERENCE DWG E4-001 FOR INSTALLATION SCOPE OF WORK.

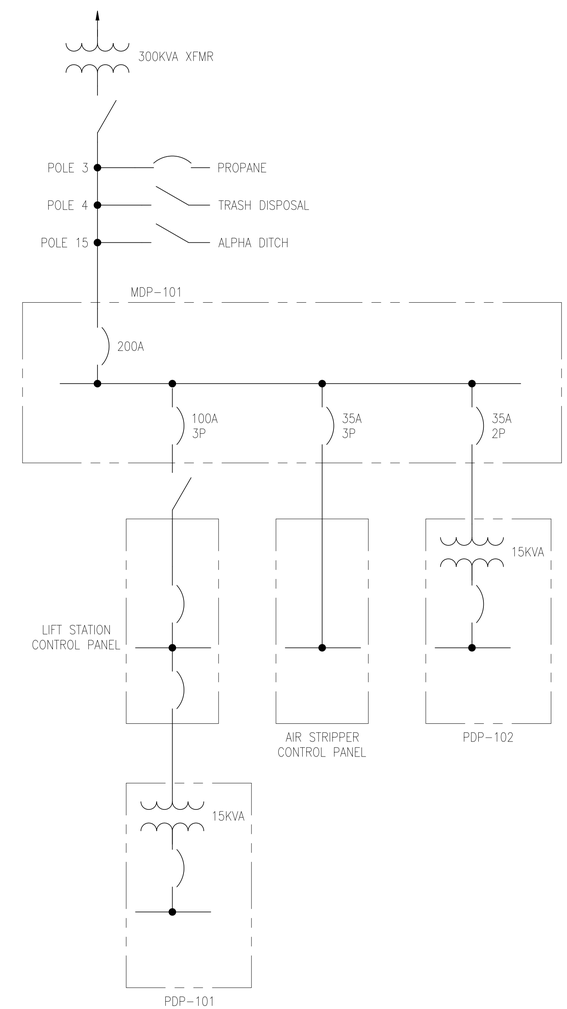

OVERALL 480V DISTRIBUTION

THIS DRAWING WAS PREPARED BY POWER ENGINEERS, INC. FOR A SPECIFIC PROJECT, TAKING INTO CONSIDERATION THE SPECIFIC AND UNIQUE REQUIREMENTS OF THE PROJECT. REUSE OF THIS DRAWING OR ANY INFORMATION CONTAINED IN THIS DRAWING FOR ANY PURPOSE IS PROHIBITED UNLESS WRITTEN PERMISSION FROM BOTH POWER AND POWER'S CLIENT IS GRANTED.

E3-002.DWG

REV	REVISIONS	DATE	DRN	DSGN	CKD	APPD	REFERENCE DRAWINGS	
B	ISSUED FOR USE	01/09/14	CMC	MJB	KTB	RPP		
A	ISSUED FOR BIDDING	11/20/13	CMC	MJB	KTB	RPP	*	*

DSGN	MJB	11/19/13
DRN	CMC	11/20/13
CKD	RPP	11/20/13

SCALE: NONE

FOR 22x34 DWG ONLY

POWER ENGINEERS

GEI

TITANIUM METALS CORPORATION
HENDERSON, NEVADA

GROUNDWATER REMEDIATION EXTRACTION SYSTEM
ELECTRICAL PANEL SCHEDULES

JOB NUMBER 132766

REV B

DRAWING NUMBER E3-002

LEGEND

- GRAVEL ROAD
- FENCE
- PROPERTY LINE
- EXTRACTION WELL

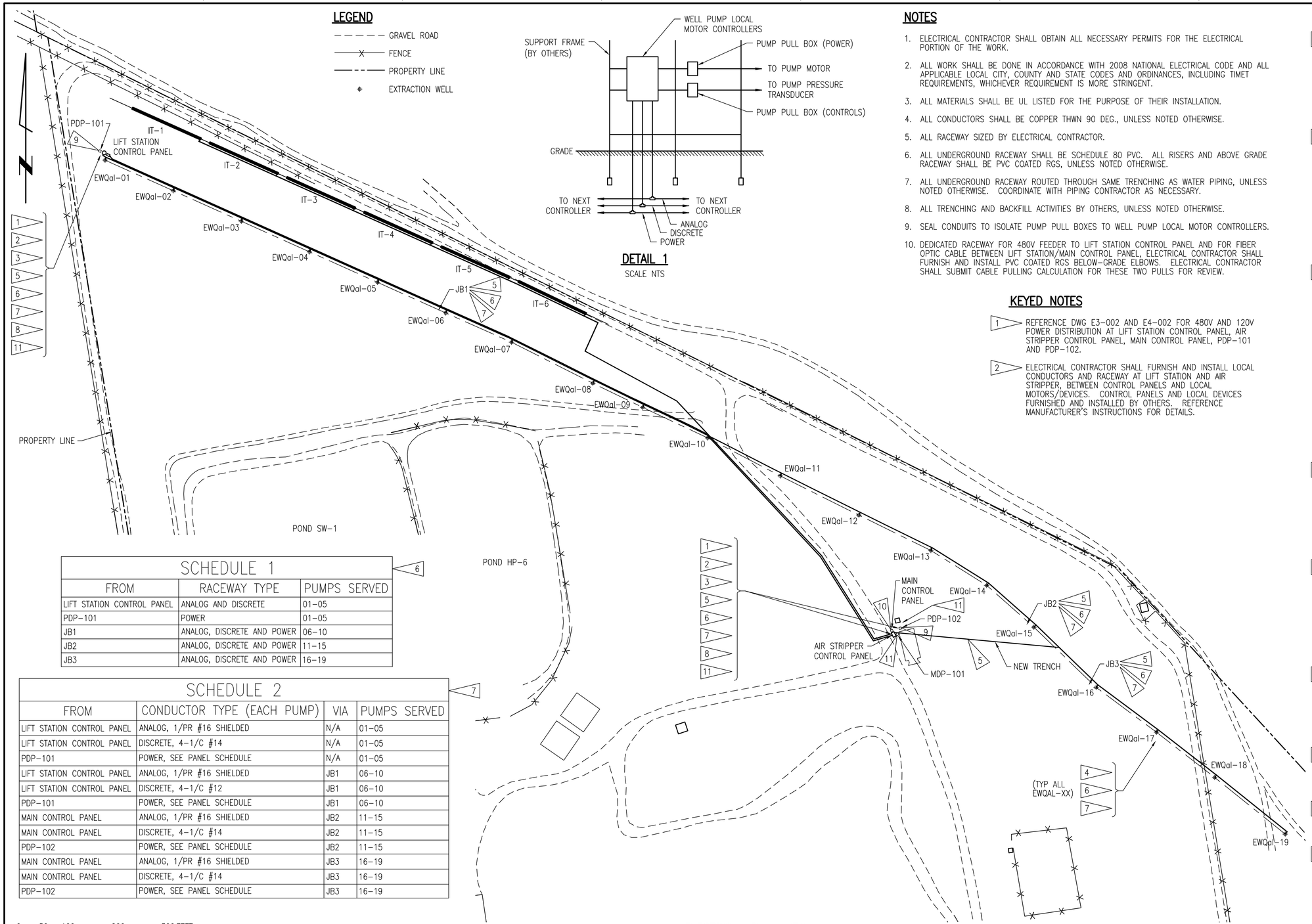

DETAIL 1

SCALE NTS

SCHEDULE 1		
FROM	RACEWAY TYPE	PUMPS SERVED
LIFT STATION CONTROL PANEL	ANALOG AND DISCRETE	01–05
PDP–101	POWER	01–05
JB1	ANALOG, DISCRETE AND POWER	06–10
JB2	ANALOG, DISCRETE AND POWER	11–15
JB3	ANALOG, DISCRETE AND POWER	16–19

SCHEDULE 2			
FROM	CONDUCTOR TYPE (EACH PUMP)	VIA	PUMPS SERVED
LIFT STATION CONTROL PANEL	ANALOG, 1/PR #16 SHIELDED	N/A	01–05
LIFT STATION CONTROL PANEL	DISCRETE, 4–1/C #14	N/A	01–05
PDP–101	POWER, SEE PANEL SCHEDULE	N/A	01–05
LIFT STATION CONTROL PANEL	ANALOG, 1/PR #16 SHIELDED	JB1	06–10
LIFT STATION CONTROL PANEL	DISCRETE, 4–1/C #12	JB1	06–10
PDP–101	POWER, SEE PANEL SCHEDULE	JB1	06–10
MAIN CONTROL PANEL	ANALOG, 1/PR #16 SHIELDED	JB2	11–15
MAIN CONTROL PANEL	DISCRETE, 4–1/C #14	JB2	11–15
PDP–102	POWER, SEE PANEL SCHEDULE	JB2	11–15
MAIN CONTROL PANEL	ANALOG, 1/PR #16 SHIELDED	JB3	16–19
MAIN CONTROL PANEL	DISCRETE, 4–1/C #14	JB3	16–19
PDP–102	POWER, SEE PANEL SCHEDULE	JB3	16–19

0 50 100 200 300 FEET

1" = 100'

ELECTRICAL PLAN VIEW

SCALE 1" = 100'

NOTES

1. ELECTRICAL CONTRACTOR SHALL OBTAIN ALL NECESSARY PERMITS FOR THE ELECTRICAL PORTION OF THE WORK.
2. ALL WORK SHALL BE DONE IN ACCORDANCE WITH 2008 NATIONAL ELECTRICAL CODE AND ALL APPLICABLE LOCAL CITY, COUNTY AND STATE CODES AND ORDINANCES, INCLUDING TIMET REQUIREMENTS, WHICHEVER REQUIREMENT IS MORE STRINGENT.
3. ALL MATERIALS SHALL BE UL LISTED FOR THE PURPOSE OF THEIR INSTALLATION.
4. ALL CONDUCTORS SHALL BE COPPER THWN 90 DEG., UNLESS NOTED OTHERWISE.
5. ALL RACEWAY SIZED BY ELECTRICAL CONTRACTOR.
6. ALL UNDERGROUND RACEWAY SHALL BE SCHEDULE 80 PVC. ALL RISERS AND ABOVE GRADE RACEWAY SHALL BE PVC COATED RGS, UNLESS NOTED OTHERWISE.
7. ALL UNDERGROUND RACEWAY ROUTED THROUGH SAME TRENCHING AS WATER PIPING, UNLESS NOTED OTHERWISE. COORDINATE WITH PIPING CONTRACTOR AS NECESSARY.
8. ALL TRENCHING AND BACKFILL ACTIVITIES BY OTHERS, UNLESS NOTED OTHERWISE.
9. SEAL CONDUITS TO ISOLATE PUMP PULL BOXES TO WELL PUMP LOCAL MOTOR CONTROLLERS.
10. DEDICATED RACEWAY FOR 480V FEEDER TO LIFT STATION CONTROL PANEL AND FOR FIBER OPTIC CABLE BETWEEN LIFT STATION/MAIN CONTROL PANEL, ELECTRICAL CONTRACTOR SHALL FURNISH AND INSTALL PVC COATED RGS BELOW–GRADE ELBOWS. ELECTRICAL CONTRACTOR SHALL SUBMIT CABLE PULLING CALCULATION FOR THESE TWO PULLS FOR REVIEW.

KEYED NOTES

1. REFERENCE DWG E3–002 AND E4–002 FOR 480V AND 120V POWER DISTRIBUTION AT LIFT STATION CONTROL PANEL, AIR STRIPPER CONTROL PANEL, MAIN CONTROL PANEL, PDP–101 AND PDP–102.
2. ELECTRICAL CONTRACTOR SHALL FURNISH AND INSTALL LOCAL CONDUCTORS AND RACEWAY AT LIFT STATION AND AIR STRIPPER, BETWEEN CONTROL PANELS AND LOCAL MOTORS/DEVICES. CONTROL PANELS AND LOCAL DEVICES FURNISHED AND INSTALLED BY OTHERS. REFERENCE MANUFACTURER'S INSTRUCTIONS FOR DETAILS.

KEYED NOTES (CONTINUED)

3. ELECTRICAL CONTRACTOR SHALL FURNISH AND INSTALL SCHNEIDER ELECTRIC MINI POWER–ZONE TRANSFORMER/PANELBOARDS PDP–101 AND PDP–102, MODEL MPZ15S40FSS (NEMA 3R, 480V–120/240V, SINGLE PHASE, 15 KVA, 18 KAIC). FURNISH AND INSTALL ALL NECESSARY GALVANIZED STEEL STRUT AND COMPONENTS TO MOUNT MINI POWER–ZONE AT LIFT PUMP STATION AND AIR STRIPPER. FURNISH AND INSTALL FEEDER CONDUCTORS AND RACEWAY BETWEEN LIFT STATION CONTROL PANEL AND PDP–101 AND BETWEEN MDP–101 AND PDP–102.
4. ELECTRICAL CONTRACTOR SHALL INSTALL WELL PUMP LOCAL MOTOR CONTROLLERS AND PUMP PULL BOXES, CONTROLLERS AND PUMP PULL BOXES FURNISHED BY OTHERS. GALVANIZED STEEL STRUCTURE FOR MOUNTING WELL PUMP LOCAL MOTOR CONTROLLERS AND ASSOCIATED PULL BOXES FURNISHED AND INSTALLED BY PIPING CONTRACTOR. COORDINATE WITH PIPING CONTRACTOR FOR SIZING REQUIREMENTS FOR ELECTRICAL EQUIPMENT. FURNISH AND INSTALL LOCAL CONDUCTORS, ENCLOSURES AND RACEWAY BETWEEN A GIVEN CONTROLLER AND ITS ASSOCIATED PUMP AND PRESSURE TRANSDUCER, IN ACCORDANCE WITH MANUFACTURER'S INSTRUCTIONS. CONDUCTOR BETWEEN PUMP PULL BOXES AND MOTOR/PRESSURE TRANSDUCER FURNISHED BY PUMP MANUFACTURER.
5. ELECTRICAL CONTRACTOR SHALL FURNISH AND INSTALL JUNCTION BOXES JB1, JB2 AND JB3. FURNISH JUNCTION BOXES BASED UPON DESIGN DRAWINGS AND BILLS OF MATERIALS FROM TIMET. FURNISH AND INSTALL ALL NECESSARY GALVANIZED STEEL STRUT AND COMPONENTS TO MOUNT JUNCTION BOXES ABOVE–GRADE AT LOCATIONS INDICATED. COORDINATE FINAL LOCATION AND SUPPORT METHOD WITH TIMET. FURNISH AND INSTALL DEDICATED POWER RACEWAY FROM PDP–101 TO JB1 AND SEPARATE ANALOG AND DISCREET RACEWAY FROM LIFT STATION CONTROL PANEL TO JB1. FURNISH AND INSTALL DEDICATED POWER RACEWAY FROM PDP–102 TO EACH JB2 AND JB3 AND SEPARATE ANALOG AND DISCREET RACEWAY FROM MAIN CONTROL PANEL TO EACH JB2 AND JB3. RACEWAY ASSOCIATED WITH JB2 AND JB3 TO BE INSTALLED IN TRENCH FROM AIR STRIPPER AREA TO JB2/3 AREA. ELECTRICAL CONTRACTOR SHALL PROVIDE TRENCH AND BACKFILL, IN ACCORDANCE WITH TIMET REQUIREMENTS. FINALIZE TRENCH ROUTING WITH TIMET. NOTE THAT POWER RACEWAY TO JB3 SHALL BE SIZED LARGE ENOUGH TO INCLUDE CONDUCTORS FOR A FUTURE WELL PUMP 20, REFERENCE PDP–102 PANEL SCHEDULE FOR ADDITIONAL INFORMATION.
6. ELECTRICAL CONTRACTOR SHALL FURNISH AND INSTALL SEPARATE POWER, ANALOG AND DISCREET RACEWAY FROM LIFT STATION CONTROL PANEL, PDP–101, JB1, JB2 AND JB3 TO WELL PUMP CONTROLLERS 01–19, IN ACCORDANCE WITH SCHEDULE 1. FURNISH AND INSTALL 'MAIN' RACEWAY ALONG WATER PIPING TRENCH AND T–TYPE PVC CONDUIT BODIES AT EACH WELL PUMP CONTROLLER, FOR INSTALLATION OF LOCAL CONTROLLER CONDUCTORS. ELBOWS SHALL BE UTILIZED AT THE LAST PUMP CONTROLLER LOCATION ALONG A GIVEN 'MAIN' RACEWAY.
7. ELECTRICAL CONTRACTOR SHALL FUNISH POWER, ANALOG AND DISCREET CONDUCTORS TO SERVE WELL PUMPS 01–19, IN ACCORDANCE WITH SCHEDULE 2. EACH WELL PUMP SHALL UTILIZE DEDICATED CONDUCTORS. FOR WELL PUMPS SERVED VIA A JUNCTION BOX, CONDUCTORS SHALL TERMINATE ON TERMINAL BLOCKS WITHIN JUNCTION BOX AND THEN CONTINUE ON TO WELL PUMP CONTROLLERS. REFERENCE TIMET JUNCTION BOX WIRING DRAWINGS FOR ADDITIONAL INFORMATION. NOTE THAT POWER CONDUCTORS FOR FUTURE WELL 20 ONLY INSTALLED FROM PDP–102 TO JB3. REFERENCE PDP–102 PANEL SCHEDULE FOR ADDITIONAL INFORMATION.
8. ELECTRICAL CONTRACTOR SHALL FURNISH AND INSTALL A 2–FIBER, SINGLE–MODE CABLE IN DEDICATED RACEWAY BETWEEN LIFT STATION CONTROL PANEL AND MAIN CONTROL PANEL. UTILIZE SAME CONDUIT AS CONTROL/INSTRUMENTATION CONDUCTORS FOR PUMPS 01–10. CONTINUE RACEWAY FROM PUMP 10 CONTROL PULL BOX TO MAIN CONTROL PANEL. TERMINATE FIBER OPTIC CABLE AT CONTROL PANELS IN ACCORDANCE WITH MANUFACTURER INSTRUCTIONS.
9. ELECTRICAL CONTRACTOR SHALL FURNISH AND INSTALL GROUNDING ELECTRODES AND GROUNDING ELECTRODE CONDUCTORS AS NECESSARY FOR THE SEPARATELY DERIVED SYSTEMS AT PDP–101 AND PDP–102, IN ACCORDANCE WITH ARTICLE 250 OF THE NEC.
10. ELECTRICAL CONTRACTOR SHALL INSTALL MAIN CONTROL PANEL, CONTROL PANEL FURNISHED BY OTHERS. FURNISH AND INSTALL CONCRETE PAD AS NECESSARY TO SUPPORT CONTROL PANEL.
11. ELECTRICAL CONTRACTOR SHALL FURNISH AND INSTALL MAIN DISTRIBUTION PANEL MDP–101. REFERENCE DWG E3–002 FOR PANELBOARD INFORMATION. FURNISH AND INSTALL ALL NECESSARY GALVANIZED STEEL STRUT AND COMPONENTS TO MOUNT PANELBOARD NEAR AIR STRIPPER CONTROL PANEL. FURNISH AND INSTALL FEEDERS CONDUCTORS AND RACEWAY FROM MDP–101 TO THE AIR STRIPPER CONTROL PANEL, PDP–102 AND THE LIFT STATION CONTROL PANEL. FOR THE FEEDER TO THE LIFT STATION CONTROL PANEL, FURNISH AND INSTALL DEDICATED RACEWAY FROM MDP–101 TO LIFT STATION CONTROL PANEL FOR LIFT STATION FEEDER CONDUCTORS.

THIS DRAWING WAS PREPARED BY POWER ENGINEERS, INC. FOR A SPECIFIC PROJECT, TAKING INTO CONSIDERATION THE SPECIFIC AND UNIQUE REQUIREMENTS OF THE PROJECT. REUSE OF THIS DRAWING OR ANY INFORMATION CONTAINED IN THIS DRAWING FOR ANY PURPOSE IS PROHIBITED UNLESS WRITTEN PERMISSION FROM BOTH POWER AND POWER'S CLIENT IS GRANTED.

REV	REVISIONS	DATE	DRN	DSGN	CKD	APPD	REFERENCE DRAWINGS	
D	ISSUED FOR USE	01/09/14	CMC	MJB	KTB	RPP		
C	ISSUED FOR BIDDING	11/20/13	CMC	MJB	KTB	RPP		
B	ISSUED FOR BIDDING	11/08/13	CMC	MJB	KTB	RPP		
A	ISSUED FOR BID	11/04/13	CMC	MJB	KTB	RPP	*	*

DSGN	MJB	11/01/13
DRN	CMC	11/01/13
CKD	RPP	11/04/13
SCALE:	1" = 100'	

FOR 22x34 DWG ONLY

POWER ENGINEERS

GEI

TITANIUM METALS CORPORATION
HENDERSON, NEVADA

GROUNDWATER REMEDIATION EXTRACTION SYSTEM
ELECTRICAL PLAN VIEW

JOB NUMBER 132766

REV D

DRAWING NUMBER E4–001

E4–001.DWG

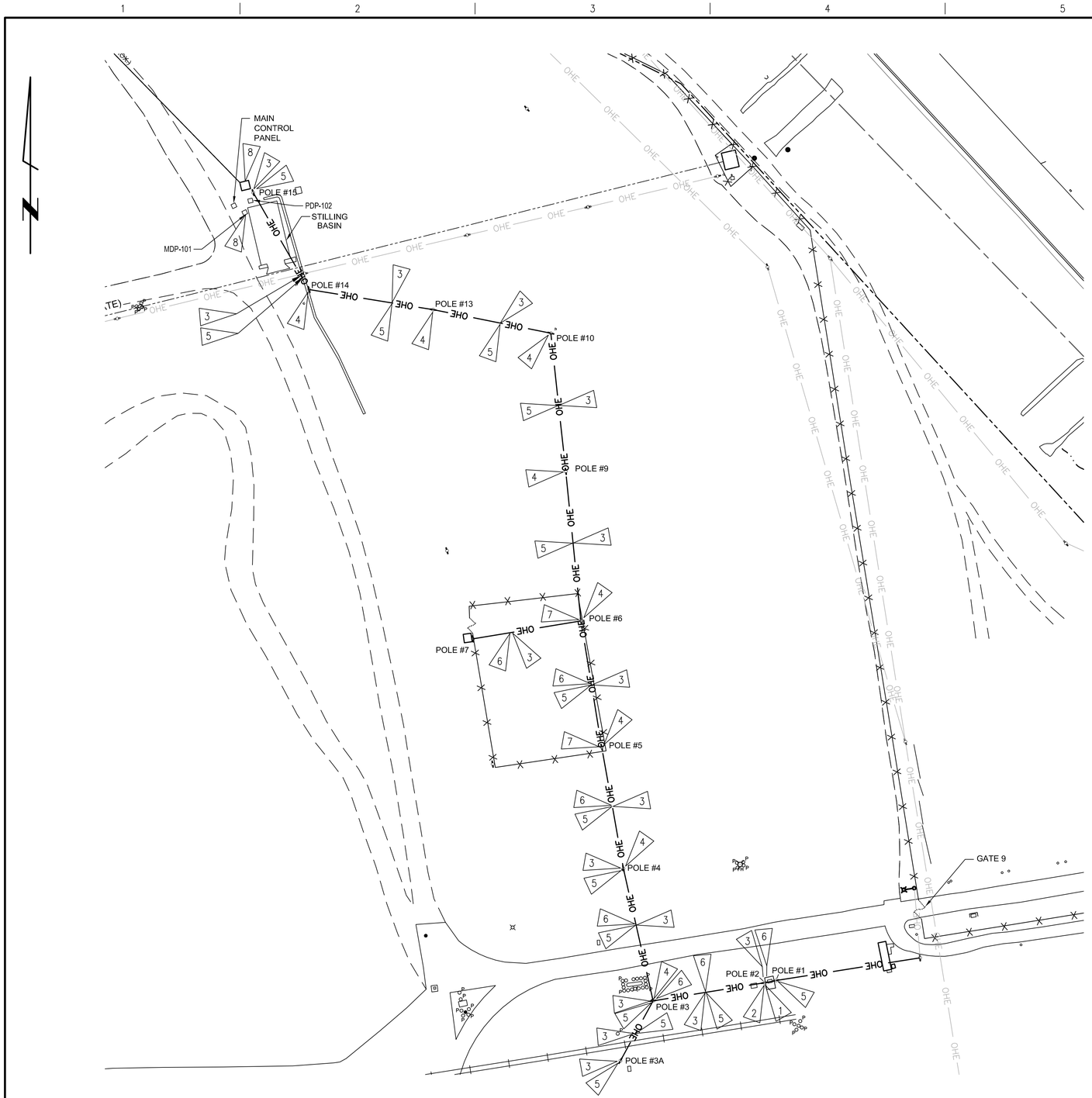

ELECTRICAL PLAN VIEW

SCALE 1" = 60'

NOTES

1. ELECTRICAL CONTRACTOR SHALL OBTAIN ALL NECESSARY PERMITS FOR THE ELECTRICAL PORTION OF THE WORK.
2. ALL WORK SHALL BE DONE IN ACCORDANCE WITH 2008 NATIONAL ELECTRICAL CODE AND ALL APPLICABLE LOCAL CITY, COUNTY AND STATE CODES AND ORDINANCES, INCLUDING TIMET REQUIREMENTS, WHICHEVER REQUIREMENT IS MORE STRINGENT.
3. ALL MATERIALS SHALL BE UL LISTED FOR THE PURPOSE OF THEIR INSTALLATION.
4. ALL CONDUCTORS SHALL BE COPPER THWN 90 DEG., UNLESS NOTED OTHERWISE.
5. ALL RACEWAY SIZED BY ELECTRICAL CONTRACTOR.
6. ALL UNDERGROUND RACEWAY SHALL BE SCHEDULE 80 PVC. ALL RISERS AND ABOVE GRADE RACEWAY SHALL BE PVC COATED RGS, UNLESS NOTED OTHERWISE.
7. ALL UNDERGROUND RACEWAY ROUTED THROUGH SAME TRENCHING AS WATER PIPING, UNLESS NOTED OTHERWISE. COORDINATE WITH PIPING CONTRACTOR AS NECESSARY.
8. ALL TRENCHING AND BACKFILL ACTIVITIES BY OTHERS, UNLESS NOTED OTHERWISE.

LEGEND

- GRAVEL ROAD
- FENCE
- PROPERTY LINE
- OHE — OVERHEAD ELECTRIC
- POWER POLE

KEYED NOTES

1. ELECTRICAL CONTRACTOR SHALL REMOVE EXISTING 150 KVA TRANSFORMER AND RETURN TO OWNER. INSTALL OWNER-FURNISHED 300 KVA TRANSFORMER. RE-TERMINATE EXISTING INCOMING 4160V PRIMARY CONDUCTOR AND SECONDARY CONDUCTORS FOR EXISTING 400 AMP POLE-MOUNTED DISCONNECT SWITCH. FURNISH AND INSTALL ADDITIONAL RACEWAY AS NECESSARY. RE-ESTABLISH EXISTING GROUNDING ELECTRODE CONNECTIONS.
2. ELECTRICAL CONTRACTOR SHALL REMOVE EXISTING POLE-MOUNTED 200 AMP DISCONNECT SWITCH AND RETURN TO OWNER. REMOVE RACEWAY/CONDUCTORS BETWEEN DISCONNECT SWITCH AND EXISTING TRANSFORMER. FURNISH AND INSTALL POLE-MOUNTED 400 AMP DISCONNECT SWITCH WITH 250 AMP FUSES. FURNISH AND INSTALL 3-250 KCMIL & #4 GND AND RACEWAY BETWEEN NEW TRANSFORMER AND NEW DISCONNECT SWITCH.
3. ELECTRICAL CONTRACTOR SHALL REMOVE EXISTING 480V OVERHEAD CONDUCTORS BETWEEN THE 200 AMP DISCONNECT SWITCH AT POLE #2 AND THE TWO EXISTING POLE-MOUNTED DISCONNECT SWITCHES AT POLE 15 (CONDUCTORS BETWEEN POLE 2, 3, 4, 5, 6, 9, 10, 13, 14 AND 15), INCLUDING CONDUCTOR AND RACEWAY ON POLES 2 AND 15. REMOVE EXISTING 480V CONDUCTORS BETWEEN POLES #6 AND #7. REMOVE EXISTING 480V POWER DROPS AT POLES #3, 3A AND 4. REMOVE EXISTING 120/240V CONDUCTORS BETWEEN THE EXISTING POLE-MOUNTED MINI POWER ZONE PANEL AT POLE #3 AND POLE #2 AND FROM THE MINI POWER CENTER TO POLE #7 (CONDUCTORS BETWEEN POLE 3, 4, 5, 6 AND 7). 120/240 CONDUCTORS FROM POLE #2 TO THE GATE 9 AREA SHALL REMAIN IN PLACE.
4. ELECTRICAL CONTRACTOR SHALL FURNISH AND INSTALL 35', CLASS 5 WOOD POLES, TO REPLACE POLES #3, 4, 5, 6, 9, 10, 13 AND 14. LOCATE POLES AS CLOSE AS PRACTICAL TO EXISTING. FURNISH AND INSTALL DOWN GUY WIRES AND ANCHORS AS REQUIRED.
5. ELECTRICAL CONTRACTOR SHALL FURNISH AND INSTALL OVERHEAD 480V 336.4 KCMIL ALUMINUM QUADRAPLEX CABLE, FROM 200 AMP DISCONNECT SWITCH AT POLE #2 TO POLE #15 (VIA NEW POLES 3, 4, 5, 6, 9, 10, 13 AND 14). FURNISH AND INSTALL OVERHEAD 480V 336.4 KCMIL ALUMINUM QUADRAPLEX CABLE FROM TOP OF POLE #3 TO EXISTING POLE-MOUNTED DISCONNECT SWITCH ON POLE #3A. FURNISH AND INSTALL MESSENGER SUPPORT WIRE AS NECESSARY. FURNISH AND INSTALL EYE THROUGH BOLTS AND WEDGE GRIP-TYPE ANCHORS AT EACH POLE AS NECESSARY TO SECURE THE MESSENGER WIRE. AT POLE #3 AND #4, FURNISH AND INSTALL 336.4 KCMIL ALUMINUM QUADRAPLEX CABLE DROPS TO THE MINI POWER ZONE PANEL AND TRASH DISPOSAL DISCONNECT SWITCHES, RESPECTIVELY. FURNISH AND INSTALL POLE-MOUNTED RACEWAY AS NECESSARY. SPLICE CONDUCTORS AT POLE TOP AS NECESSARY USING APPROVED CONNECTORS.
6. ELECTRICAL CONTRACTOR SHALL FURNISH AND INSTALL OVERHEAD 120/240 V #6 AWG ALUMINUM QUADRAPLEX CABLE, FROM MINI POWER ZONE AT NEW POLE #3 TO POLE #2 AND SPLICE INTO EXISTING CONDUCTORS AT POLE #2 TO SERVE GATE 9 AREA. FURNISH AND INSTALL OVERHEAD #6 AWG ALUMINUM QUADRAPLEX CABLE, FROM TOP OF NEW POLE #3 TO POLE #7 (VIA NEW POLES 3, 4, 5 AND 6). SPLICE INTO NEW CONDUCTORS RUNNING TO POLE #2. FURNISH AND INSTALL MESSENGER SUPPORT WIRE AS NECESSARY. FURNISH AND INSTALL EYE THROUGH BOLTS AND WEDGE GRIP-TYPE ANCHORS AT EACH POLE AS NECESSARY TO SECURE THE MESSENGER WIRE. FURNISH AND INSTALL POLE-MOUNTED RACEWAY AS NECESSARY. SPLICE CONDUCTORS AT POLE TOP AS NECESSARY USING APPROVED CONNECTORS.
7. ELECTRICAL CONTRACTOR SHALL RELOCATE EXISTING POLE-MOUNTED LIGHT FIXTURES ON POLES #5 AND #6 TO NEW POLES #5 AND #6. TERMINATE NEW 120/240 CONDUCTOR AS NECESSARY TO MATCH EXISTING INSTALLATION.
8. ELECTRICAL CONTRACTOR SHALL FURNISH AND INSTALL 3-250 KCMIL & #4 AWG GND CONDUCTORS BETWEEN LINE SIDE OF EXISTING DISCONNECT SWITCH AT POLE #15 AND MDP-101. FURNISH AND INSTALL RACEWAY AS NECESSARY.

NOTE:
REVISIONS/ADDITIONS TO ELECTRICAL PLAN TO BE ISSUED BY TIMET.

THIS DRAWING WAS PREPARED BY POWER ENGINEERS, INC. FOR A SPECIFIC PROJECT, TAKING INTO CONSIDERATION THE SPECIFIC AND UNIQUE REQUIREMENTS OF THE PROJECT. REUSE OF THIS DRAWING OR ANY INFORMATION CONTAINED IN THIS DRAWING FOR ANY PURPOSE IS PROHIBITED UNLESS WRITTEN PERMISSION FROM BOTH POWER AND POWER'S CLIENT IS GRANTED.

REV	REVISIONS	DATE	DRN	DSGN	CKD	APPD	REFERENCE DRAWINGS	
B	ISSUED FOR USE	01/09/14	CMC	MJB	KTB	RPP		
A	ISSUED FOR BIDDING	11/20/13	CMC	MJB	KTB	RPP	*	*

DSGN	MJB	11/20/13
DRN	CMC	11/20/13
CKD	RPP	11/20/13
SCALE:	1" = 60'	

FOR 22x34 DWG ONLY

POWER ENGINEERS

GEI

TITANIUM METALS CORPORATION
HENDERSON, NEVADA

GROUNDWATER REMEDIATION EXTRACTION SYSTEM
ELECTRICAL PLAN VIEW

JOB NUMBER 132766

REV B

DRAWING NUMBER E4-002

E4-002.DWG

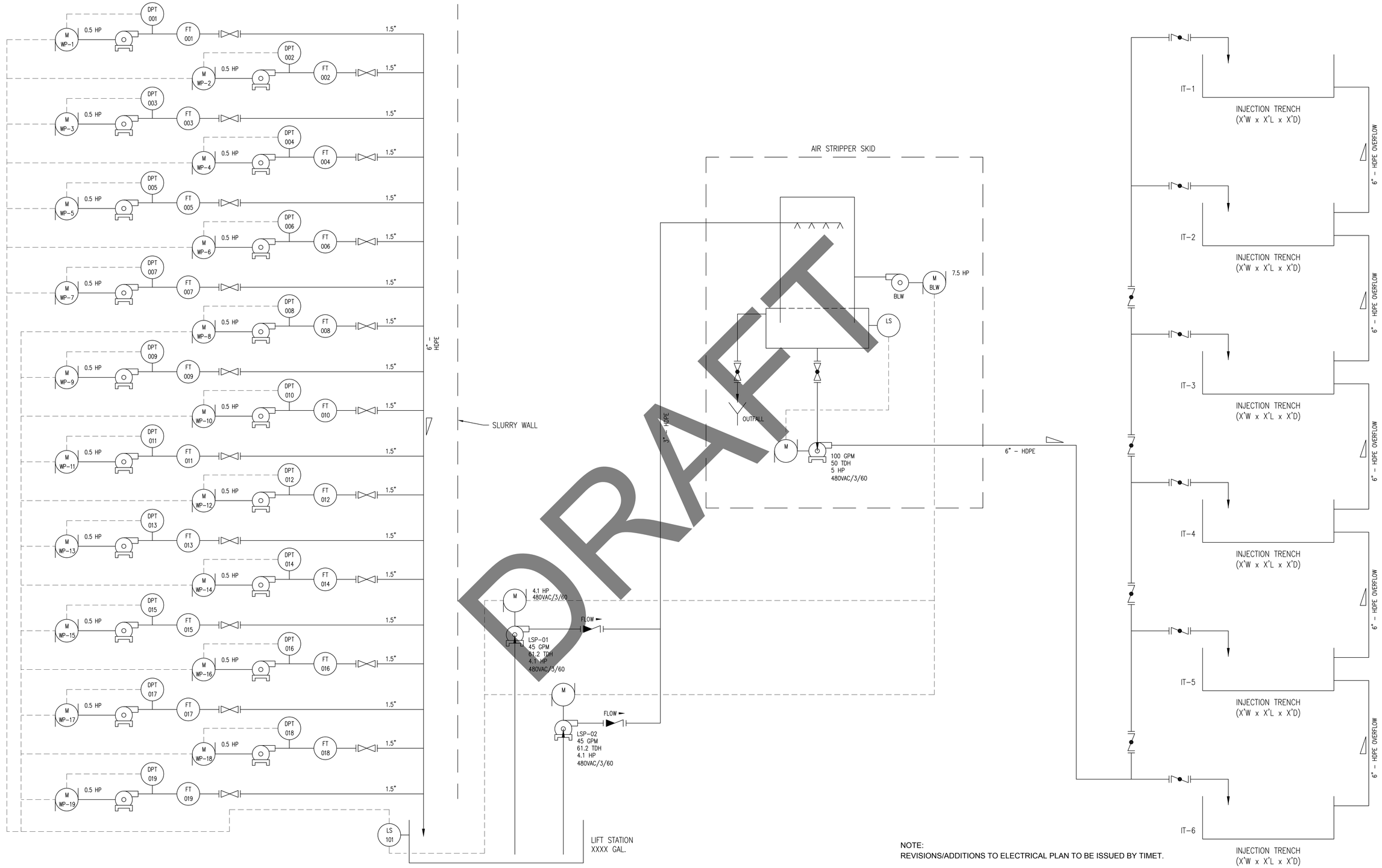

DRAFT

NOTE:
REVISIONS/ADDITIONS TO ELECTRICAL PLAN TO BE ISSUED BY TIMET.

THIS DRAWING WAS PREPARED BY POWER ENGINEERS, INC. FOR A SPECIFIC PROJECT, TAKING INTO CONSIDERATION THE SPECIFIC AND UNIQUE REQUIREMENTS OF THE PROJECT. REUSE OF THIS DRAWING OR ANY INFORMATION CONTAINED IN THIS DRAWING FOR ANY PURPOSE IS PROHIBITED UNLESS WRITTEN PERMISSION FROM BOTH POWER AND POWER'S CLIENT IS GRANTED.

REV	REVISIONS	DATE	DRN	DSGN	CKD	APPD
B	ISSUED FOR BIDDING	11/08/13	CMC	RPP		RPP
A	ISSUED FOR REVIEW	11/01/13	RAC	*	*	*

REFERENCE DRAWINGS: *, *

DSGN	RP	10/30/13
DRN	RAC	11/01/13
CKD		
SCALE:	NONE	

FOR 22x34 DWG ONLY

POWER ENGINEERS

GEI

TITANIUM METALS CORPORATION
HENDERSON, NEVADA

GROUNDWATER REMEDIATION EXTRACTION SYSTEM
PROCESS & INSTRUMENTATION DIAGRAM

JOB NUMBER 131528

REV B

DRAWING NUMBER PFD-002

PFD-002.DWG

CONCRETE NOTES

1. GENERAL:
1.1. ALL WOR□ SHALL CONFORM WITH ACI 301, LATEST EDITION, UNLESS NOTED OTHERWISE IN DRAWINGS OR PROJECT SPECIFICATIONS.

1.2. DETAIL BARS IN ACCORDANCE WITH THE LATEST EDITIONS OF PUBLICATION SP-66: “ACI DETAILING MANUAL” WITH ADDED REQUIREMENTS OF ACI 318: “BUILDING CODE REQUIREMENTS FOR STRUCTURAL CONCRETE.”

2. DIMENSIONS:
2.1. DIMENSIONS ARE TO THE CENTERLINES OF THE BARS UNLESS OTHERWISE SHOWN. CLEAR COVER DIMENSIONS ARE MARKED “CLR”. ALL DIMENSIONS TO A JOINT ARE TO THE CENTERLINE OF THE JOINT.

2.2. THIC□NESS SHOWN FOR SLABS ADJACENT TO UNDISTURBED SOIL OR ROC□ ARE MINIMUM DIMENSIONS.

3. STRUCTURAL CONCRETE MIX REQUIREMENTS:
3.1. SEE □CONCRETE MI□ TABLE□

4. FINISHING AND CONCRETE TOLERANCES:
□.1. FINISH SURFACES FOR ALL SLABS, WALLS, CONSTRUCTION AND CONTROL JOINTS SHALL BE PROVIDED IN ACCORDANCE WITH THE SPECIFICATIONS.

□.2. UNLESS OTHERWISE INDICATED, CHAMFER EDGES OF ALL PERMANENTLY E□POSED CONCRETE SURFACES WITH A □□DEGREE BEVEL, 3□□INCH □ 3□□INCH. CHAMFER STRIP MAY NOT BE SHOWN ON THE DESIGN DRAWINGS.

5. CONSTRUCTION/CONTROL JOINTS:
□.1. SUBMIT DRAWINGS SHOWING CONSTRUCTION AND CONTROL JOINT LOCATIONS ALONG WITH THE SE□UENCE OF POURS. CONSTRUCTION JOINT LOCATIONS AND CASTING SE□UENCE SHALL BE ARRANGED TO MINIMI□E THE EFFECTS OF ELASTIC AND LONG-TERM SHORTENING□SHRIN□AGE. NO OTHER JOINTS SHALL BE INTRODUCED UNLESS APPROVED BY THE ENGINEER BEFORE CONCRETE IS PLACED.

□.2. CONSTRUCTION JOINT LOCATION AND CASTING SE□UENCE SHOWN ON THE DRAWINGS IS SUGGESTED AND HAS BEEN ARRANGED TO MINIMI□E THE EFFECTS OF ELASTIC AND LONG-TERM SHORTENING. SUBMIT DRAWINGS SHOWING PROPOSED CONSTRUCTION JOINT LOCATION AND CASTING SE□UENCE.

□.3. CONSTRUCTION JOINTS IN SLABS SHALL BE LOCATED TO ACCOMMODATE THE MA□IMUM LENGTH AND AREA THE CONTRACTOR CAN REASONABLY POUR, FINISH, AND JOINT IN THE SAME DAY, BUT SHALL NOT E□CEED A LENGTH OF 1□0 FEET WITH A MA□IMUM AREA OF 1□,000 S□UARE FEET UNLESS APPROVED BY THE ENGINEER.

□.□. SHEAR FRICTION JOINTS: WHERE CONSTRUCTION JOINTS ARE LABELED AS “ROUGHENED” ON THE DRAWINGS, THE ENTIRE JOINT SURFACE SHALL BE MECHANICALLY ROUGHENED TO A 1/4” AMPLITUDE AND THOROUGHLY CLEANED. E□POSE THE COURSE AGGREGATE IN THE HARDENED CONCRETE AND REMOVE ALL LOOSE MATERIAL.

6. REINFORCING FABRICATION:
□.1. SPLICE LENGTHS:

□.1.1. NO SPLICING OF REINFORCEMENT PERMITTED E□CEPT AS NOTED ON DRAWINGS. MA□E BARS CONTINUOUS AROUND CORNERS. WHERE PERMITTED, SPLICES MAY BE MADE BY CONTACT LAPS OR MECHANICAL CONNECTORS.

□.1.2. SPLICES ARE TO BE MADE SO THAT GIVEN CLEAR DISTANCES TO THE FACE OF CONCRETE WILL BE MAINTAINED.

□.1.3. UNLESS OTHERWISE SHOWN ON THE DRAWINGS, THE MINIMUM LENGTHS FOR EMBEDMENT AND LAP SPLICES FOR PARALLEL BARS SHALL BE AS GIVEN IN THE SCHEDULE.

□.1.□. SEE □LAP SPLICE AND DEVELOPMENT LENGTH SCHEDULE□FOR LAP.

□.2. MISCELLANEOUS REINFORCING RE□UIREMENTS:

□.2.1. PROVIDE ADDITIONAL BARS OR STIRRUPS RE□UIRED TO SECURE REINFORCING IN PLACE DURING CONCRETE PLACEMENT.

□.2.2. MA□E ALL REINFORCING BAR BENDS IN THE FABRICATOR□S SHOP UNLESS NOTED.

□.2.3. NO WELDING OF REINFORCING PERMITTED UNLESS NOTED ON DRAWINGS. WHERE PERMITTED, PERFORM WELDING IN ACCORDANCE WITH AWS D1.□, LATEST EDITION.

□.2.□. PROVIDE ADDED REINFORCING TO TRIM ALL OPENINGS, NOTCHES, AND REENTRANT CORNERS AS NOTED IN TYPICAL DETAILS.

7. SPACING:
□.1. THE FIRST AND LAST BARS IN SLABS ARE TO START AND END AT A MA□IMUM OF ONE HALF THE ADJACENT BAR SPACING. ALL REINFORCING TO BE E□UALLY SPACED UNLESS OTHERWISE SHOWN ON THE DRAWINGS.

8. REINFORCING MATERIALS:
□.1. SEE □REINFORCING MATERIALS TABLE□

□.2. PLACE REINFORCEMENT IN ACCORDANCE WITH APPROVED REINFORCEMENT SHOP DRAWINGS. IN THE EVENT OF A CONFLICT BETWEEN THESE DRAWINGS AND THE APPROVED SHOP DRAWINGS, THE APPROVED SHOP DRAWINGS SHALL GOVERN.

□.3. REINFORCEMENT PROTECTION:

□.3.1. SEE ACI 31□-11 □.□AND ACI 301, SECTION □.3 FOR REINFORCEMENT PLACING TOLERANCES AND ACI 11□ FOR ADDITIONAL RE□UIREMENTS

□.□. PROVIDE ACCESSORIES NECESSARY TO PROPERLY SUPPORT REINFORCING AT POSITIONS SHOWN ON PLANS. THE RECOMMENDATIONS OF ACI 31□ □DETAILING MANUAL□SHALL BE USED IN SELECTING ACCESSORIES.

□.□. ALL REINFORCING, DOWELS, BOLTS, AND EMBEDDED PLATES SHALL BE SET AND TIED IN PLACE BEFORE THE CONCRETE IS POURED. “STABBING” INTO PREVIOUSLY PLACED CONCRETE IS NOT PERMITTED.

□.□. BEFORE PLACING CONCRETE, CHEC□ ALL APPLICABLE DRAWINGS RELEASED AS SUITABLE FOR CONSTRUCTION INCLUDING MANUFACTURER□S DRAWINGS TO VERIFY THE PRESENCE OF ALL EMBEDDED MATERIAL RE□UIRED IN THE PLACEMENT.

□.□. REINFORCEMENT MAY BE ADJUSTED IN THE FIELD TO CLEAR FORM TIES AND ANCHOR BARS. IN SUCH CASES, RELOCATION OF THE EMBEDDED MATERIALS MUST BE CONSIDERED. IN NO CASE SHOULD BARS BE BENT IN THE FIELD.

□.□. WHERE POSSIBLE, REINFORCEMENT SHALL BE PLACED TO MAINTAIN A CLEAR DISTANCE OF AT LEAST 1 INCH BETWEEN OTHER REINFORCEMENT, ANCHOR BOLTS, FORM TIES, OR OTHER EMBEDDED METALWOR□. REINFORCEMENT PARALLEL TO ANCHOR BOLTS OR OTHER EMBEDDED METAL WOR□S SHALL BE PLACED TO MAINTAIN A CLEAR DISTANCE OF AT LEAST 1-1□3 TIMES THE MA□IMUM SI□E AGGREGATE TO BE USED.

9. SUBGRADE PREPARATION:
9.1 REMOVE SOFT AND□OR SATURATED SOIL FROM WOR□ AREA PRIOR TO PLACING CONCRETE OR AGGREGATE BASE MATERIAL.

9.2 PLACE AND COMPACT MINIMUM □INCHES OF NEVADA DOT TYPE 2 AGGREGATE BASE MATERIAL OVER PREPARED SUBGRADE PRIOR TO PLACING CONCRETE.

2

CONCRETE MIX INFORMATION

CONCRETE MI□ TABLE

CONC MI□ TYPE	INTENDED USE	2□ DAY STRENGTH, f□c □□SI□	CONCRETE WEIGHT	MA□ W□C RATIO, INCLUDING FLY ASH	MIN AGGREGATE SI□E □IN□, NOTE □	TOTAL AIR CONTENT □□□, NOTE □	OTHER RE□UIREMENTS
1	E□TERIOR E□UIPMENT PAD	□.□	NWC	0.□□	3□□	□	--

CONCRETE MIX TABLE NOTES:
1. PROPORTIONS OF MATERIALS IN CONCRETE MI□ SHALL BE ESTABLISHED TO:
   - PROVIDE THE MINIMUM COMPRESSIVE STRENGTH AS INDICATED IN THE MI□ TABLE. DO NOT E□CEED THE MA□IMUM WATER-CEMENT RATIO NOTED.
   - PROVIDE WOR□ABILITY AND CONSISTENCY TO PERMIT CONCRETE TO BE WOR□ED READILY INTO FORMS AND AROUND REINFORCEMENT UNDER CONDITIONS OF PLACEMENT TO BE EMPLOYED, WITHOUT SEGREGATION OR E□CESSIVE BLEEDING. CONTRACTOR SHALL SELECT APPROPRIATE SLUMP. USE ADMI□TURES AS RE□UIRED TO OBTAIN DESIRED RESULTS.
2. USE TYPE V PORTLAND CEMENT UNLESS NOTED OTHERWISE.
3. FOR CONCRETE PLACED BY PUMPING PROVIDE CONCRETE MI□ FLOWABILITY TO FACILITATE PUMPING. ENTRAINED AIR MAY BE USED TO FACILITATE PUMPING SUBJECT TO THE PROVISIONS OF NOTE □BELOW.

□. FOR THE MINIMUM COARSE AGGREGATE SI□E INDICATED, USE THE FOLLOWING AGGREGATE SI□E NUMBERS PER ASTM C33:
   - 3/4”: #67 AGGREGATE

□. WHERE AIR CONTENT IS INDICATED IN THE MI□ TABLE, PROVIDE AIR ENTRAINING ADMI□TURE. TOTAL AIR CONTENT LIMITS INCLUDE BOTH ENTRAINED AND ENTRAPPED AIR □□- 1 1□2□ . AIR CONTENT NOTED IS BASED ON 3□□" AGGREGATE.

TYPICAL REINFORCING INFORMATION

REINFORCING MATERIAL TABLE

REINFORCING ELEMENT	ASTM	Fy □□SI□	Fu □□SI□	COMMENTS
TYP REINFORCING	A□1□	□0	90	--
WELDED □ FIELD BENT REINF	A□0□	□0	□0	--

LAP SPLICE AND DEVELOPMENT LENGTH SCHEDULE □INCHES□

BAR SI□E □US□	BAR DIAMETER	F□c □ □□00 PSI TENSION LDH	LTE TOP	LTE	LTS TOP	LTS
□3	0.3□□	□	1□	13	23	1□
□□	0.□00	□	23	1□	30	23
□□	0.□2□	□	29	22	3□	29

GENERAL NOTES:
1. □LDH□□HOO□ DEVELOPMENT LENGTH, □LTE□□TENSION EMBEDMENT LENGTH, □LTS□TENSION LAP SPLICE LENGTH
2. □TOP□BARS ARE HORI□ONTAL BARS PLACED WITH MORE THAN 12 INCHES OF FRESH CONCRETE BELOW THE BAR
3. UNLESS NOTED OTHERWISE, ALL HOO□ BARS E□TEND TO THE FAR FACE □LESS COVER□

LAP SPLICE NOTES:
1. ALL SPLICES SHALL BE WIRED IN CONTACT
2. ALL SPLICE ARE □LTS□UNLESS NOTED OTHERWISE
3. SMALLER BAR LAP LENGTH SHALL BE USED WHEN SPLICING DIFFERENT SI□ED BARS

HOO□ EMBEDMENT NOTES:
1. SCHEDULED HOO□ EMBEDMENT LENGTHS ASSUME:
   1.1. SIDE COVER IS 2 ½ INCHES OR GREATER
   1.2. COVER BEYOND IS 2 INCHES OR GREATER
2. IF SIDE COVER IS LESS THAN 2 1□2 INCHES, INCREASE LENGTHS BY □0□

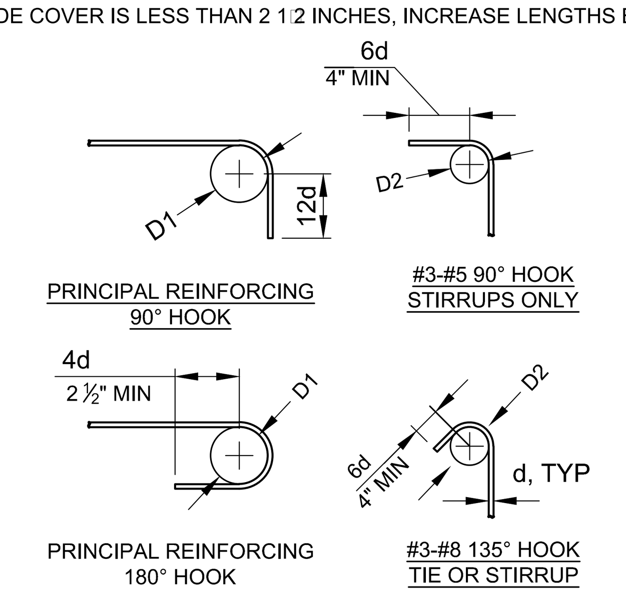

D1		D2	
#3 - #8	6d	#3 - #5	4d
#9 - #11	8d	#6 - #8	6d
		#9 - #11	8d

TYPICAL REINFORCING BENDS

NOTES:
1. ALL BENDS SHALL BE MADE COLD

GENERAL NOTES

1. GENERAL:
1.1. ENGINEER: REFERENCES ON THE STRUCTURAL DRAWINGS TO □ENGINEER□MEAN THE STRUCTURAL ENGINEER OF RECORD. OTHER ENTITIES ARE SPECIFICALLY NOTED AS “CONTRACTOR'S ENGINEER”, “GEOTECHNICAL ENGINEER”, ETC.

1.2. UNDERGROUND UTILITIES: LOCATE E□ISTING UTILITIES AND NOTIFY OWNER REPRESENTATIVE OF E□ISTING UTILITIES OR SUBGRADE CONDITIONS WHICH INTERFERE WITH WOR□.

2. USE OF DRAWINGS:
2.1. DO NOT SCALE DRAWINGS.

2.2. WHERE DISCREPANCIES OCCUR BETWEEN PLANS, DETAILS AND GENERAL NOTES, THE MORE STRINGENT RE□UIREMENTS SHALL GOVERN. WHERE NO SPECIFIC DETAILS ARE SHOWN, CONSTRUCTION SHALL CONFORM TO SIMILAR WOR□ ELSEWHERE ON THE PROJECT.

3. SUBMITTALS AND SUBSTITUTIONS:
3.1. SUBMIT THE FOLLOWING INFORMATION TO THE CONSTRUCTION ADMINISTRATOR FOR REVIEW AND APPROVAL:

3.1.1. CONCRETE MI□ PROPORTIONS: SUBMIT SOURCES, PROPORTIONS AND TESTING DATA FOR ALL CONSTITUENT MATERIALS, WATER-CEMENT □w□c□RATIO, AND MI□TURE CHARACTERISTICS FOR ALL DESIGNS OF PORTLAND CEMENT CONCRETE. SUBMITTAL SHALL INCLUDE COPIES OF ALL TRAIL MI□ REPORTS, AND THE PROPORTIONS OF ALL MATERIALS USED SHALL CONFORM TO THE APPROVED MI□ DESIGN.

3.1.2. CONCRETE ADMI□TURES: SUBMIT SPECIFICATION SHEETS AND A STATEMENT FO SUITABILITY PROVIDED BY MANUFACTURER FOR ALL ADMI□TURES USED IN THE CONCRETE MI□.

3.1.3. PORTLAND CEMENT CONCRETE TEST REPORTS: SUBMIT COPIES OF LABORATORY TRAIL BATCH TEST REPORTS OR FIELD-TEST DATA.

3.1.□. SHOP DRAWINGS FOR REINFORCEMENT: SUBMIT SHOP DRAWINGS FOR THE FABRICATION, BENDING, AND PLACEMENT OF CONCRETE REINFORCEMENT.

3.1.□. RELATED MATERIALS: SUBMIT SPECIFICATIONS SHEETS FOR ALL RELATED MATERIALS USED FOR CONCRETE WOR□ INCLUDING, BUT NOT LIMITED TO, EVAPORATION REDUCER, BOND BREA□ERS, CURING COMPOUNDS, AND WATER STOPS.

3.2. SUBMITTALS:

3.2.1. IF THE CONTRACTOR RE□UESTS A CHANGE FROM THE STRUCTURAL DRAWINGS, IT SHALL BE APPROVED BY THE OWNER□S REPRESENTATIVE AND DESIGNED BY GEI CONSULTS, INC. PRIOR TO SUBMITTING SHOP DRAWINGS. VARIATION SHALL BE INDICATED ON THE SHOP DRAWINGS. CONTRACTOR SHALL COMPENSATE GEI CONSULTANTS, INC. FOR MA□ING THE CHANGE.

3.2.2. CONSTRUCTION DOCUMENTS SHALL NOT BE REPRODUCED FOR USE IN SUBMITTALS.

3.2.3. ALL SHOP DRAWINGS SHALL REFERENCE THE STRUCTURAL DRAWING NUMBER AND DETAIL USED TO PREPARE THE SUBMITTAL.

3.3. SUBSTITUTIONS: OWNER□S REPRESENTATIVE APPROVAL SHALL BE SECURED FOR ALL SUBSTITUTIONS

3.□. NONCONFORMANCE: NOTIFY OWNER□S REPRESENTATIVE OF CONDITIONS NOT CONSTRUCTED PER THE CONTRACT DOCUMENTS PRIOR TO PROCEEDING WITH CORRECTIVE WOR□. SUBMIT PROPOSED REPAIR TO THE OWNER□S REPRESENTATIVE FOR ACCEPTANCE. CONTRACTOR SHALL COMPENSATE GEI CONSULTANTS, INC. FOR DESIGNING THE REPAIR.

4. OSHA STANDARDS:
□.1. THE STRUCTURE IS DESIGNED TO FUNCTION AS A UNIT UPON COMPLETION. NOTHING SHOWN ON THE STRUCTURAL DRAWINGS SHALL BE CONSTRUED AS ELIMINATING THE NEED FOR THE CONTRACTOR TO COMPLY WITH ALL OSHA RE□UIREMENTS.

□.2. THE CONTRACTOR SHALL ADD ALL NECESSARY BOLTS, ANCHOR BOLTS, PLATES, ETC.

□.3. WHERE THE STRUCTURAL DRAWINGS APPEAR TO CONFLICT WITH OSHA RE□UIREMENTS, THE STRUCTURAL DRAWINGS REPRESENT FINAL CONDITIONS ONLY. THE CONTRACTOR SHALL ADD ALL ERECTION FRAMING NECESSARY TO COMPLY WITH OSHA.

5. CONSTRUCTION ENGINEERING:
□.1. THE STRUCTURE DEFINED ON THE CONTRACT DOCUMENTS HAS BEEN DESIGNED ONLY FOR LOADS ANTICIPATED ON THE STRUCTURE DURING ITS SERVICE LIFE. PROVIDE ALL RE□UIRED ENGINEERING AND OTHER MEASURES TO ACHIEVE THE MEANS, METHODS, AND SE□UENCES OF WOR□. SUCH ENGINEERING MAY INCLUDE, BUT IS NOT LIMITED TO:

□.1.1. LAYOUT

□.1.2. DESIGN FOR FORMWOR□, SHORING, AND RESHORING

□.1.3. DESIGN OF CONCRETE MI□ES

□.1.□. DESIGN OF TEMPORARY BRACING OF WALLS FOR WIND, SEISMIC, OR SOIL LOADS

□.1.□. SURVEYING TO VERIFY CONSTRUCTION TOLERANCES

□.1.□. EVALUATION OF TEMPORARY CONSTRUCTION LOADS ON STRUCTURE DUE TO E□UIPMENT AND MATERIALS

DRAWING LIST

S-01 AIR STRIPPER PAD NOTES, LEGENDS AND ABBREVIATIONS
S-02 AIR STRIPPER AND LIFT STATION PAD PLANS DETAILS
S-03 CONCRETE PAD DETAILS

ABBREVIATIONS

AB	□ ANCHOR BOLT	NTS	□ NOT TO SCALE
ALT	□ ALTERNATE	NWS	□ NORMAL WATER SURFACE
APPRO□	□ APPRO□IMATE	O.C.	□ ON CENTER
BOT	□ BOTTOM	OD	□ OUTSIDE DIAMETER
CJ	□ CONSTRUCTION JOINT	OH	□ OPPOSITE HAND
CL, L	□ CENTERLINE	PL	□ PLATE
CLR	□ CLEAR	REINF	□ REINFORCEMENT
CONC	□ CONCRETE	RE□□D	□ RE□UIRED
CONT	□ CONTINUOUS	S	□ SLOPE
CT J	□ CONTRACTION JOINT	SIM	□ SIMILAR
CNTR	□ CENTER	SPC, SPCS	□ SPACE OR SPACES
DIA, Ø	□ DIAMETER	SS	□ STAINLESS STEEL
EA	□ EACH	STL	□ STEEL
EF	□ EACH FACE	T□B	□ TOP □ BOTTOM
EJ	□ E□PANSION JOINT	TBD	□ TO BE DETERMINED
EW	□ EACH WAY	T.O.	□ TOP OF
FT	□ FEET OR FOOT	TYP	□ TYPICAL
HOR□	□ HORI□ONTAL	UNO	□ UNLESS NOTED OTHERWISE
MA□	□ MA□IMUM	VERT	□ VERTICAL
MIN	□ MINIMUM		
MFR	□ MANUFACTURER		

SYMBOL LEGEND

DRAWING SCALE IN UNITS SPECIFIED

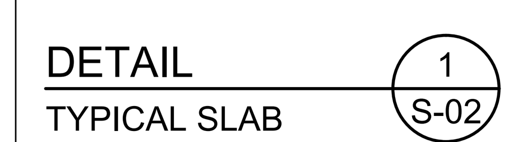

DETAIL TITLE. THE "1" REFERS TO THE DETAIL DESIGNATION. THE NUMBER "S-02" REFERS TO THE DRAWING NUMBER WHERE THE DETAIL IS CALLED OUT.

SECTION TITLE. THE "A" REFERS TO THE SECTION DESIGNATION. THE "S-02" REFERS TO THE DRAWING NUMBER WHERE THE SECTION IS CALLED OUT.

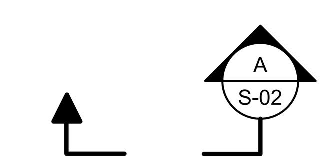

SECTION LOCATION. THE "A" REFERS TO THE SECTION DESIGNATION. THE "S-02" REFERS TO THE DRAWING NUMBER WHERE THE SECTION IS SHOWN.

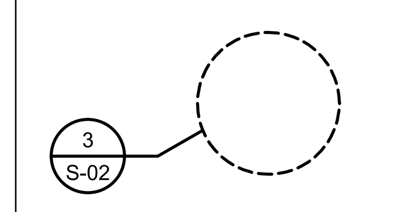

DETAIL LOCATION. THE "3" REFERS TO THE DETAIL DESIGNATION. THE "S-02" REFERS TO THE DRAWING NUMBER WHERE THE DETAIL IS SHOWN.

HATCH LEGEND

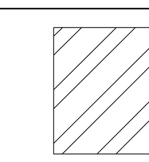

STEEL

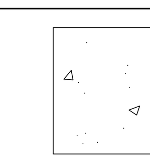

STRUCTURAL CONCRETE

Attention:	NO.	DATE	ISSUE□REVISION	APP
1" If this scale bar does not measure 1" then drawing is not original scale.	2	1□□201□	TYPE 2 AGGREGATE BASE ADDED	GAO
	1	12□1□2013	REVISED PAD DETAILS	GAO
	0	12□3□2013	ISSUED FOR BIDDING	MGR

Designed: R. Price□C. Niemela
Checked: M. Ruetten
Drawn: R. Price□C. Niemela
Submittal Date: 12□3□2013

GEI Consultants
31□9 Voyager Drive
Green Bay, Wisconsin □□311
920-□□□-□200

TITANIUM METALS CORPORATION
1□1 NORTH WATER STREET
BLAC□ MOUNTAIN INDUSTRIAL CENTER
HENDERSON, NEVADA □901□
GEI Project 13230□0

GROUNDWATER REMEDIATION E□TRACTION SYSTEM

AIR STRIPPER PAD NOTES, LEGENDS AND ABBREVIATIONS

DWG. NO. S-01

SHEET NO. 22 of 2□

J:\Landfills\Timet\Recharge□Trenches\E□TRACTION□SYSTEM□REV-2\C22□S-01□E□uipment-Pad-Notes

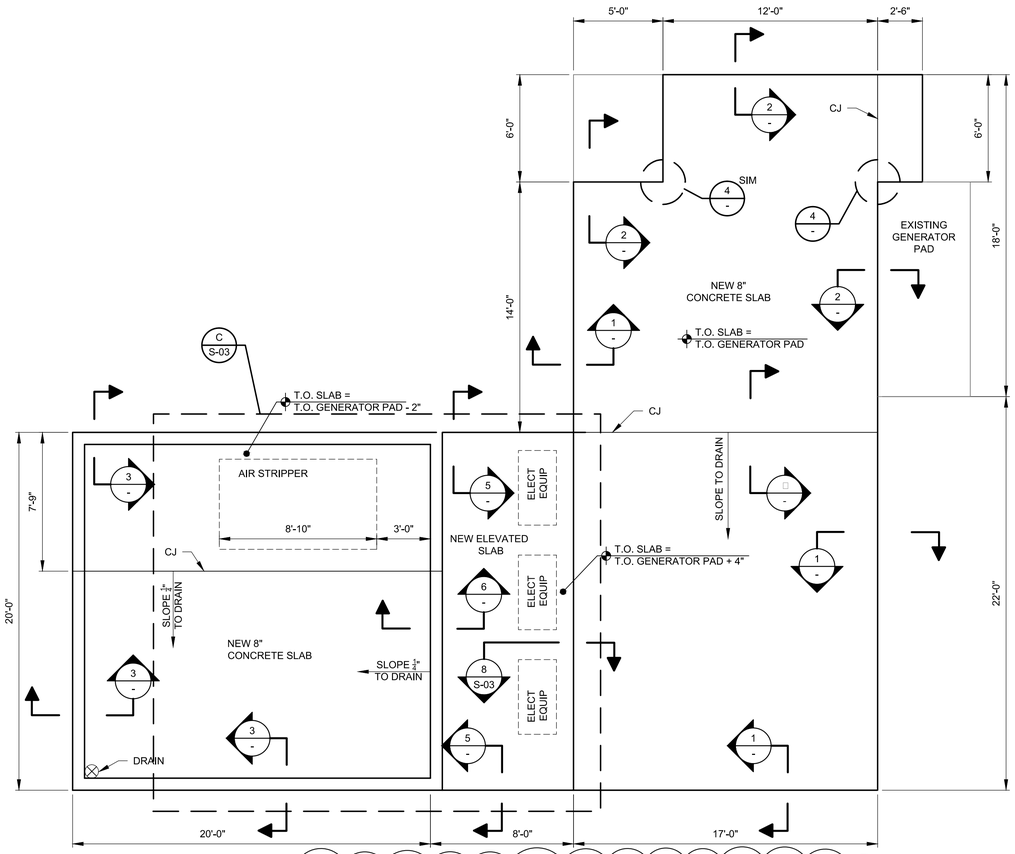

NOTES:
1. ELECTRICAL CONTRACTOR SHALL FURNISH AND INSTALL GROUNDING ELECTRODES AND GROUNDING ELECTRODE CONDUCTORS AS NECESSARY IN ACCORDANCE WITH ARTICLE 2□0 OF THE NEC.
2. PLACE AND COMPACT TYPE 2 AGGREGATE BASE MATERIAL TO THIC□NESS OF □INCHES BELOW CONCRETE SLABS.

PLAN A
AIR STRIPPER SLAB

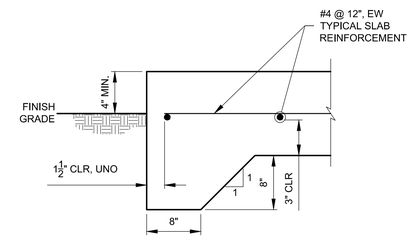

DETAIL 1
TYPICAL SLAB EDGE

0 1□2 1
2" □ 1□-0"

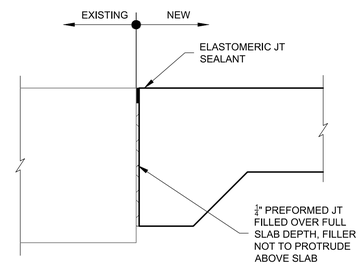

NOTES:
1. SEE 4/S02 FOR ADDITIONAL DETAILS

DETAIL 2
TYPICAL ISOLATION SLAB EDGE

0 1□2 1
2" □ 1□-0"

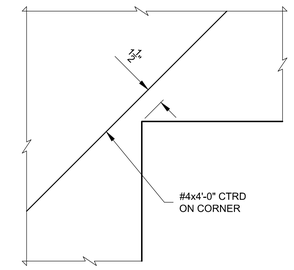

DETAIL
TYPICAL RE-ENTRANT CORNER REINFORCEMENT

0 1□2 1
2" □ 1□-0"

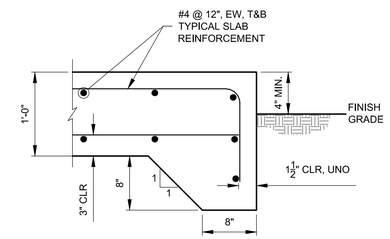

DETAIL
TYPICAL ELEVATED SLAB EDGE

0 1□2 1
2" □ 1□-0"

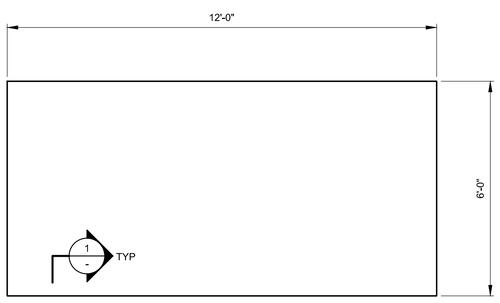

NOTES:
1. ELECTRICAL CONTRACTOR SHALL FURNISH AND INSTALL GROUNDING ELECTRODES AND GROUNDING ELECTRODE CONDUCTORS AS NECESSARY IN ACCORDANCE WITH ARTICLE 2□0 OF THE NEC.
2. PLACE AND COMPACT TYPE 2 AGGREGATE BASE MATERIAL TO THIC□NESS OF □INCHES BELOW CONCRETE SLABS.

PLAN B
LIFT STATION ELECTRICAL SLAB

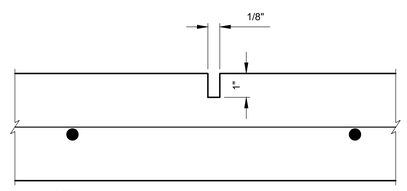

NOTES:
1. PROVIDE TOOLED JT OR SAW CUT AS SOON AS CONC HAS HARDENED SUFFICIENTLY TO PERMIT CUTTING WITHOUT CHIPPING, SPALLING, OR TEARING (BUT NO MORE THAN 12 HOURS AFTER CASTING)

DETAIL
TYP CONTROL JOINT □CJ□

N.T.S

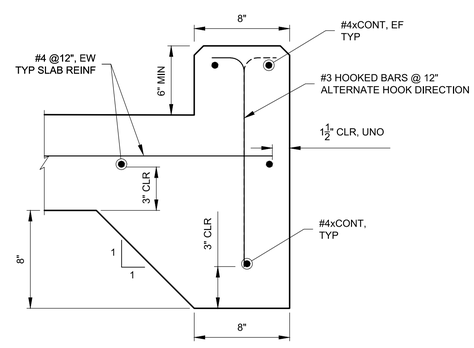

SECTION 3
TYP PERIMETER CURB

0 1□2 1
2" □ 1□-0"

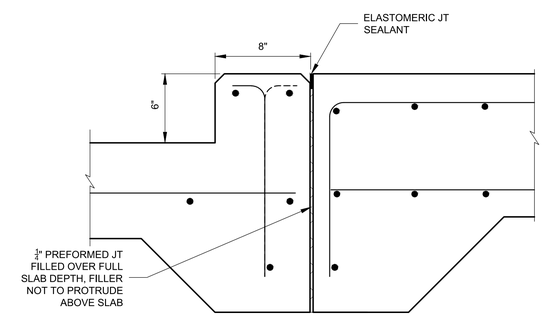

NOTES:
1. SEE 3&5/S-02 FOR ADDITIONAL DETAILS

DETAIL
CURB TO ELEVATED SLAB

0 1□2 1
2" □ 1□-0"

Attention:

1"

If this scale bar does not measure 1" then drawing is not original scale.

NO.	DATE	ISSUE□REVISION	APP
2	1□□201□	TYPE 2 AGGREGATE BASE ADDED	GAO
1	12□1□□2013	REVISED PAD DETAILS	GAO
0	12□3□2013	ISSUED FOR BIDDING	MGR

Designed: R. Price□C. Niemela
Checked: M. Ruetten
Drawn: R. Price□C. Niemela
Submittal Date: 12□3□2013

GEI Consultants
31□9 Voyager Drive
Green Bay, Wisconsin □311
920-□□□-□200

TITANIUM METALS CORPORATION
1□1 NORTH WATER STREET
BLAC□ MOUNTAIN INDUSTRIAL CENTER
HENDERSON, NEVADA □901□

GEI Project 13230□0

GROUNDWATER REMEDIATION E□TRACTION SYSTEM

AIR STRIPPER AND LIFT STATION PAD PLAN DETAILS

DWG. NO. S-02

SHEET NO. 23 of 2□

J:\Landfills\Timet\Recharge□Trenches\E□TRACTION□SYSTEM□REV-2\C23□S-02□Air-Stripper□Lift-Station□Pad-Plan-Details

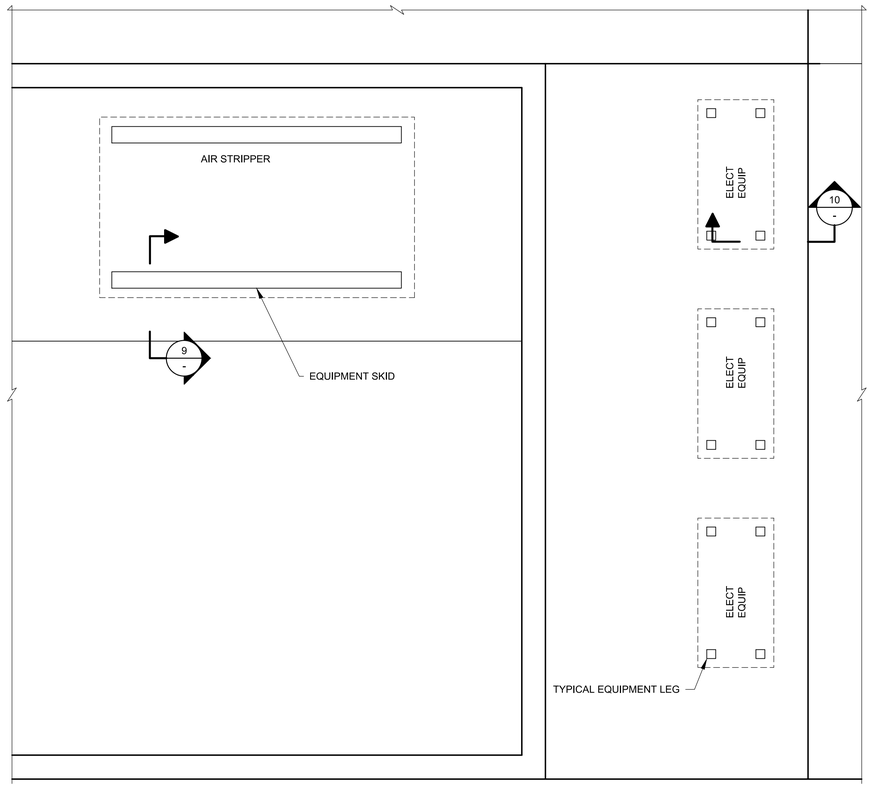

PLAN C
AIR STRIPPER SLAB

0 2 SCALE, FEET

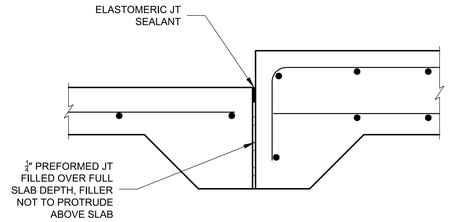

NOTES:
1. SEE 3&5/S-02 FOR ADDITIONAL DETAILS

DETAIL
CONCRETE SLAB TO ELEVATED SLAB — S-02

0 1:2 1
2" = 1'-0"

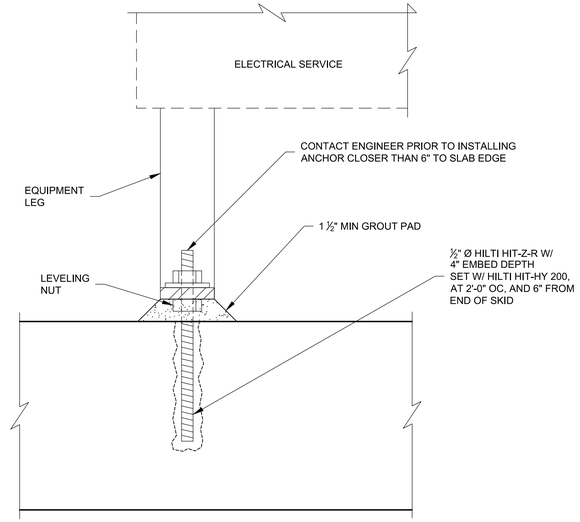

NOTES:
1. ANCHOR LOCATIONS AND SIZES NEED TO BE VERIFY WITH FINAL SKID LAYOUT. NOTIFY ENGINEER IF CHANGES ARE REQUIRED.

DETAIL
TYPICAL POST TO SLAB CONNECTION — 10 / -

0 1 1:2
1" = 1'-0"

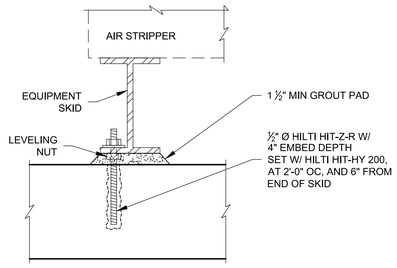

NOTES:
1. ANCHOR LOCATIONS AND SIZES SHALL TO BE VERIFY WITH FINAL SKID LAYOUT. NOTIFY ENGINEER IF CHANGES ARE REQUIRED.

DETAIL
AIR STRIPPER TANK SKID — 9 / -

0 1:2 1
2" = 1'-0"

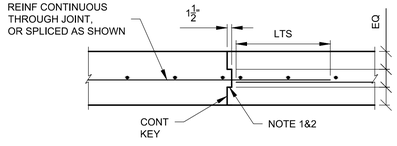

NOTES:
1. EDGES MAY BE ANGLED AT CONTRACTOR'S OPTION.
2. CLEAN SURFACES AND REMOVE STANDING WATER PRIOR TO PLACING CONCRETE.

DETAIL
CONSTRUCTION JOINT — 11 / -

N.T.S

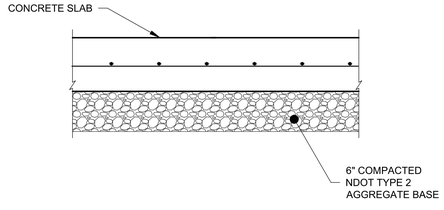

NOTES:
1. CLEAN SURFACES AND REMOVE STANDING WATER PRIOR TO PLACING CONCRETE.
2. PLACE AND COMPACT MINIMUM INCHES OF NDOT TYPE 2 AGGREGATE BASE UNDER CONCRETE.

DETAIL
TYPICAL CONCRETE SLAB — 12 / -

N.T.S

Attention:
1"
If this scale bar does not measure 1" then drawing is not original scale.

NO.	DATE	ISSUE/REVISION	APP
2	1/20/2014	TYPE 2 AGGREGATE BASE ADDED	GAO
1	12/12/2013	REVISED PAD DETAILS	GAO
0	12/3/2013	ISSUED FOR BIDDING	MGR

Designed: R. Price/C. Niemela
Checked: M. Ruetten
Drawn: R. Price/C. Niemela
Submittal Date: 12/3/2013

GEI Consultants
3119 Voyager Drive
Green Bay, Wisconsin 54311
920-497-2758

TITANIUM METALS CORPORATION
1701 NORTH WATER STREET
BLACK MOUNTAIN INDUSTRIAL CENTER
HENDERSON, NEVADA 89015

GEI Project 132300

GROUNDWATER REMEDIATION EXTRACTION SYSTEM

CONCRETE PAD DETAILS

DWG. NO. S-03

SHEET NO. 2 of 2

J:\Landfills\Timet\Recharge Trenches\EXTRACTION SYSTEM\REV-2\C2 S-03 Concrete-Pad-Details

Attachment 3

Slurry Wall Specifications and Drawings

SPECIFICATIONS
FOR
SLURRY WALL CONSTRUCTION

HENDERSON, NEVADA

Prepared by
GEI Consultants, Inc.
1070 Wigwam Parkway
Henderson, NV 89074

TECHNICAL SPECIFICATIONS
TABLE OF CONTENTS

Introductory Pages

Section No.	Description
00002	Project Directory

Bidding Requirements

Section No.	Description
00410	Bid Schedule
00440	General Contractor
00441	Subcontractors
00460	Description of Project Approach

Contract Forms and Conditions

Section No.	Description
00520	C520 Agreement Construction Contract (Stipulated Price)

Division 1 – General Requirements

Section No.	Description
01010	Summary of Work
01015	General Requirements
01019	Physical Conditions
01040	Project Administration
01050	Field Engineering and Surveying
01275	Measurement and Payment
01300	Submittal Procedures
01400	Quality Assurance and Quality Control
01500	Site Requirements, Construction Facilities, and Temporary Controls
01560	Protection of Environment
01900	Site Health and Safety

Division 2 – Site Work

Section No.	Description
02080	Materials Management
02200	Earthwork
02320	Slurry Wall
02324	Trenching and Backfilling
02415	Geotextile

Division 3 - Concrete

03060 Concrete Road Crossing

Division 15 – Mechanical

15079L HDPE Pipe

Drawings

Drawing C-0 Drawing Index
Drawing C-1 General Notes, Abbreviations, and Legend
Drawing C-2 Existing Conditions Plan
Drawing C-3 Site Preparation Plan
Drawing C-4 Slurry Wall Working Platform, Alignment, Infiltration Trenches
Drawing C-5 Slurry Wall Working Platform Profile (1 of 2)
Drawing C-6 Slurry Wall Working Platform Profile (2 of 2)
Drawing C-7 Slurry Wall Geologic Profile (1 of 2)
Drawing C-8 Slurry Wall Geologic Profile (2 of 2)
Drawing C-9 Infiltration Trench Profiles (1 of 2)
Drawing C-10 Infiltration Trench Profiles (2 of 2) and Trench Details
Drawing C-11 Final Grading Plan
Drawing C-12 Final Grade Cross Sections (1 of 2)
Drawing C-13 Final Grade Cross Sections (2 of 2)
Drawing C-14 Slurry Wall Road Crossing Details

Appendices

Appendix A Geotechnical Boring Logs
Appendix B Interim Slurry Mix Design and Compatibility Study Data Report
Appendix C Groundwater Analytical Report
Appendix D Site Water Analytical Report

00002
PROJECT DIRECTORY

PART 1 GENERAL

1.1. CONTACT INFORMATION

A. PROJECT

1. Groundwater Remedial System – Slurry Wall Construction

B. PROJECT LOCATION

1. Titanium Metals Corporation
181 North Water Street – Gate 9
Henderson, Nevada 89015

C. TIMET

1. Titanium Metals Corporation
PO Box 2128
Henderson, Nevada 89009
Phone: (702) 564-2544
Attn: Mr. Jeff Searls

D. Engineer

1. GEI Consultants, Inc.
1070 Wigwam Parkway, Suite 130
Henderson, Nevada 89074
Phone: (702) 728-2356
Attn: Mr. George Onorato, P.E.

END OF SECTION 00002

Item No.	Description	Approx. Quantity	Units	Written Unit Price	Unit Price	Amount
01 General Requirements						
1.01	Mobilization	1	Lump Sum	at _____ dollars and _____cents per LUMP SUM		
1.02	Temporary Facilities and Controls	1	Lump Sum	at _____ dollars and _____cents per LUMP SUM		
1.03	Project Submittals	1	Lump Sum	at _____ dollars and _____cents per LUMP SUM		
02 Site Preparation						
2.01	Clearing and Grubbing	1	Lump Sum	at _____ dollars and _____cents per LUMP SUM		
2.02	Transport and Dispose of Vegetation	100	Ton	at _____ dollars and _____cents per Ton		
2.03	Cut and Cap Abandoned Pipelines	1	Lump Sum	at _____ dollars and _____cents per LUMP SUM		
2.04	Protect Active Pipelines	1	Lump Sum	at _____ dollars and _____cents per LUMP SUM		
2.05	Construct Slurry Wall Working and Extension	1	Lump Sum	at _____ dollars and		

Item No.	Description	Approx. Quantity	Units	Written Unit Price	Unit Price	Amount
	Platforms Debris			_____cen ts per Lump sum		
2.06	Protect Extraction Wells	1	Lump Sum	at _____ dollars and _____cen ts per Lump sum		
2.07	Temporary disconnect and/or relocate interfering overhead and underground electrical lines	1	Lump Sum	at _____ dollars and _____cen ts per Lump sum		
03 Earthwork						
3.01	Excavate, and transport of Contaminated Soils	8,000	Ton	at _____ dollars and _____cen ts per Ton		
3.02	Slurry Wall Construction (from Stations 0+00 to 24+10)	148,019	Vertical Square feet	at _____ dollars and _____cen ts per VERTICAL SQUARE FEET		
3.03	Imported Clay	6,500	Ton	at _____ dollars and _____cen ts per TON		
3.04	Infiltration Trenches, and Associated Components	1	Lump Sum	at _____ dollars and _____cen ts per LUMP SUM		
3.05	General Fill	35,000	Ton	at _____ dollars and _____cen ts per SQUARE FOOT		

Item No.	Description	Approx. Quantity	Units	Written Unit Price	Unit Price	Amount
04 Site Restoration						
4.01	Final Grading and Site Restoration	1	Lump Sum	at _____ dollars and _____cents per LUMP SUM		
4.02	Slurry Wall Road Crossing	1	Lump Sum	at _____ dollars and _____cents per LUMP SUM		
4.03	Final Documentation and "As-Built Survey"	1	Lump Sum	at _____ dollars and _____cents per LUMP SUM		
4.04	Demobilization	1	Lump Sum	at _____ dollars and _____cents per LUMP SUM		

Project Total : $_____

SECTION NUMBER 00440
GENERAL Contractor

General Contractor:

Address:

Telephone:

% Contract Amount:

Proposed Superintendent Name: _____

_____

References: 1) _____

_____

_____

_____

2) _____

_____

_____

_____

3) _____

_____

_____

_____

_____

(Please Append Resume)

END OF SECTION 00440

SECTION NUMBER 00441
SUBCONTRACTORS

Proposed Subcontractor: _____

Address: _____

Telephone: _____

% Contract Amount: _____

Proposed Subcontractor: _____

Address: _____

Telephone: _____

% Contract Amount: _____

Proposed Subcontractor: _____

Address: _____

Telephone: _____

% Contract Amount: _____

Proposed Subcontractor: _____

Address: _____

Telephone: _____

% Contract Amount: _____

END OF SECTION 00441

SECTION NUMBER 00460
DESCRIPTION OF PROJECT APPROACH

PART 1 GENERAL

1.1. DESCRIPTION OF PROJECT APPROACH

A. The Bidder shall provide a detailed description of the proposed construction approach. Including but not limited to dust, storm water pollution prevention and transportation plans; sequencing of work, equipment usage, material stockpiling/handling, loading and transportation of clearing and grubbing material, handling of impacted materials, soil bending operation, site layout, slurry wall construction methods, and equipment, backfilling operation, protection of overhead and underground utilities, final site grading, and demobilization.

PART 2 PRODUCTS

Not Used

PART 3 EXECUTION

Not Used

END OF SECTION 00460

SECTION NUMBER 01010
SUMMARY OF WORK

PART 1 GENERAL

1.1. WORK COVERED BY CONTRACT DOCUMENTS

A. The work to be done under this Contract Document includes, but is not necessarily limited to, furnishing all labor, tools, equipment, materials, supplies, supervision, and administration for performing the following work:

1. Comply with the requirements of all permits obtained by the Engineer for use on the Project. This includes, but is not limited to any permits obtained relative to erosion and sediment controls.

2. Mobilization – Work includes, but is not limited to the obtaining all required permits and approvals; mobilization of all personnel, equipment, and materials; completion of surveys

3. Temporary Facilities and Controls – Work includes, but is not limited to installation and removal of all temporary facilities; temporary utility connections, parking, sanitary facilities and establishing staging/lay down areas, equipment servicing and maintenance facilities, access roads, safety items, compliance with Storm Water Pollution Prevention Plan and Dust Control Plan.

4. Project Submittals – Work Includes preparation of a Health and Safety Plan and all other preconstruction submittals.

5. Clearing and Grubbing – Work includes, but is not limited to providing all labor, materials, layout, and equipment required to remove vegetation from work areas. Shake soil from roots and temporarily stockpile.

6. Transport and Dispose of Vegetation – Work includes, but is not limited to providing all labor, materials, and equipment required to load and transport vegetation to an off-site disposal facility. Work includes handling and transportation. Tipping fee at landfill will be paid directly by TIMET.

7. Abandoned Pipelines – Work includes but is not limited to, providing all materials, equipment, layout, labor to locate and cut and cap buried abandoned pipelines that cross the slurry wall alignment in accordance with the Specifications, Drawings, or as directed by the Owner/Engineer. The work includes, but not limited to, excavation, cutting, cleaning, grouting, and capping of the selected pipelines. This work will include the cutting and capping of an Asbestos Containing Material (ACM) pipeline. Also included is backfilling and restoring the surface to its existing condition or as directed on the drawings.

8. Load and Transport Stockpile of Soil/Demolition Debris – Work includes, but is not limited to providing all labor, materials, and equipment required to load and haul soil/demolition debris to an off-site disposal facility (APEX Landfill). Work includes handling and transportation. Tipping fee at the landfill will be paid directly by TIMET.

9. Protection of Existing Wells – Work includes, but is not limited to providing all labor, materials, layout, and equipment required to protect all wells not designated for abandonment during the Work.

10. Protection of Active Pipelines – this work includes, but is not limited to providing all labor, materials, and equipment required to excavate, shore and support (as necessary), and protect against damage of two main plant utility lines that must remain active throughout the course of the project.

11. Contaminated Soils – Work includes, but is not limited to providing all labor, materials, and equipment required to excavate, segregate, load and transport for off-site disposal ANY contaminated soils generated as a result of the project scope. Work includes handling, loading, and transportation to APEX Landfill only; tipping fee at the landfill will be paid directly by TIMET.

12. Working Platform Construction - Work includes, but is not limited to providing all labor, materials, and equipment required to excavate (cut) and/or fill using type II imported material to construct a working platform to the grades and tolerances presented in the Specifications and Drawings.

13. Slurry Wall Construction – Work includes, but is not limited to providing all labor, materials, and equipment required for construct the slurry wall to the dimensions, depths, performance, and tolerances conveyed in the Specification and shown on the design Drawings. This work also includes all verification and construction quality assurance (CQA) testing for the slurry wall.

14. Final Mass Grading and Site Restoration – Work includes, but is not limited to providing all labor, materials, layout and equipment required to provide site-wide filling and final grading, site restoration, and application of palliative dust control in accordance with the Specifications and Drawings.

15. Final Documentation and As-Built Survey - Work includes, but is not limited to providing all labor, materials, CQA testing data, survey and equipment required to complete Final Documentation and As-Built drawings.

16. Demobilization – Work includes, but is not limited to providing all labor, materials, and equipment to remove temporary facilities, any materials brought to site by contractor that TIMET desires removed, and demobilize from the site.

B. The summary of work described above is an overall summary of the work to be performed and the responsibilities of the Contractor. It does not supersede the specific requirements of the other Contract Documents.

C. These specifications are in many instances written in imperative and streamlined form. This imperative language is directed to the Contractor, unless specifically noted otherwise.

1.2. WORK COVERED BY CONTRACT DOCUMENTS

A. The work to be performed by TIMET or TIMET's designated representatives is as follows:

1. General observation of work for conformance to specifications.
2. Construction oversight documentation and third party construction quality assurance testing including secondary testing of slurry wall backfill.
3. Perform Storm Water Regulatory Compliance Inspections.
4. Perform dust control inspections.
5. Perform perimeter air monitoring.

1.3. SEQUENCE OF Work

A. The work is to be coordinated with general site operations at the TIMET facility so as not to interfere with these activities.

PART 2 PRODUCTS

Not Used

PART 3 EXECUTION

Not Used

END OF SECTION 01010

SECTION 01015
GENERAL REQUIREMENTS

PART 1 GENERAL

1.2. DEFINITIONS AND TECHNICAL SPECIFICATION EXPLANATIONS

A. Addendum - Written or graphic instrument issued prior to the bid due date, which clarifies, corrects or changes the bidding documents of the Contract Document.

B. Project Manager - The authorized representative of the Owner, named in the Specification Data Sheet, who shall perform the Owner's administrative and management responsibilities so as to complete the project to the satisfaction of the Owner.

C. Engineer - The retained and authorized representative of the Owner, named in the Specification Data Sheet or a designated alternate, who shall perform engineering support responsibilities so as to complete the project to the satisfaction of the Owner.

D. Construction Quality Assurance Technician (CQA Technician) - The retained and authorized representative of the Owner, who shall perform inspection and testing responsibilities, so as to complete the project to the satisfaction of the Owner.

E. Asbestos Supervisor - The retained and authorized representative of the Owner, who shall perform excavation inspection to identify asbestos containing material and provide guidance to the contractor on maintaining proper asbestos removal procedures, so as to complete the project to the satisfaction of the Owner.

F. Timet Liaison - The authorized representative of the Owner, named in the Specification Data Sheet, who shall perform coordination responsibilities related to site operations and construction interfaces, so as to complete the project to the satisfaction of the Owner.

G. Contractor - General Contractor awarded contract to perform Work described by Contract Document.

H. Owner – Titanium Metals Corporation.

I. Work - Complete construction services including labor, materials, equipment, supervision and administration provided by the Contractor, or any portion thereof as implied by the context of the specification section in which the term is used.

J. Contract Document – The Document which includes the following: Agreement, General Conditions, Supplementary Conditions, Bid, Construction Technical Specifications, Drawings, and Addenda.

K. ACM - asbestos containing material

L. Others – Parties other than the Contractor.

M. In the Technical Specifications where the word "Contractor" occurs, it shall imply contractor, subcontractor, erector, fabricator or material supplier for that particular section of the specifications.

N. In the Technical Specifications, omitted phases or words, such as "The Contractor shall", "in conformity with", "as noted on Drawings", "according to the plans", "the", "all", are intentional and shall be supplied by inference.

O. Reference to standard specifications or manufacturer's directions shall mean the latest edition thereof at date of the Technical Specifications, unless otherwise noted.

P. Project Commencement - Defined as prior to Contractor mobilizing to site.

Q. Field Directive - Clarifications and changes to Technical Specifications and Project DRAWINGS will be made by the Engineer or Project Manager in a Field Directive.

R. Substantial Completion - Point in time when the entire length and depth of the slurry wall (from Station 0+00 to 24+10) has been installed.

S. Project Completion - Point in time when all Work is completed in accordance with Technical Specifications and proper submittals completed and verified.

1.3. RESPONSIBILITIES

A. The Contractor, subcontractor or material supplier shall become familiar with all conditions relating to execution of the Work. Neglect of this requirement will not be accepted as course for additional compensation or time.

B. The Contractor shall be responsible for scheduling operations to coordinate WORK of his forces, subcontractors and suppliers so as to meet the project schedule and completion date.

C. The Contractor shall obtain complete data at the site and inspect areas scheduled to receive Work before proceeding with such Work; shall be solely responsible for obtaining and verifying the accuracy of all measurements and layout of Work; and shall make good, errors or defects due to faulty measurements taken, information obtained, layout or due to failure to report discrepancies.

D. The Contractor shall notify the Engineer and Project Manager, in writing, in case of discrepancies between existing Work and Drawings or defects in such surfaces that are to receive Work. Starting of Work or failure to notify the Engineer and Project Manager of such discrepancies and/or defects shall constitute the Contractor's acceptance of the same. Removal and replacement of Work applied to defective surfaces, in order to correct defects, shall be done at expense of the Contractor who applied WORK to defective surfaces.

E. The Project Manager shall be responsible for scheduling performance of Work by the Owner or others.

F. The Engineer shall respond in writing to any written notifications made by the Contractor regarding discrepancies between existing Work and Drawings or defects in surfaces or areas that are to receive Work.

G. CQA Technician shall be responsible to maintain daily contact with the Contractor during progress of Work and to facilitate communication between the Contractor, Project Manager, and Engineer.

H. Dust Control Monitor shall work for the owner and have full authority to ensure that dust control measures are implemented, including deployment of resources and shut down of construction activities as necessary. The Dust Control Monitor shall be present at all times during which on- site construction activities have the potential to generate dust and shall devote the majority of his or her time specifically to the management of dust prevention and control. In addition, the Dust Control Monitor will conduct inspections and maintain records as required by the plan. This individual will have successfully completed the air quality classes required to maintain certification as a Dust Control Monitor.

1.4. WORK PLANS, PERMITS, AND FEES

A. Groundwater Remediation Design: final Nevada Division of Environmental Protection approval of the Groundwater Remediation Design is still pending. Once approved, a copy of the approved plan will be available to the Contractor at their request.

B. Dust Control Permit: The Contractor shall prepare a Dust Control Plan and obtain a Dust Control Permit from the Clark County Department of Air Quality. A copy of the plan and permit shall be submitted to the Engineer and the Owner. The Dust Control Monitor shall ensure the Contractor's implementation of the dust control plan and compliance with the Dust Control Permit.

C. Storm Water Pollution Prevention Plan: The Contractor shall prepare a Storm Water Pollution Prevention Plan and obtain approval from the Nevada Division of Environmental Protection. The Engineer shall ensure the Contractor's implementation and compliance with the Storm Water Pollution Prevention Plan.

D. NESHAP Asbestos Abatement Notification: The Contractor shall make notification of Asbestos Abatement Work with the Clark County Department of Air Quality. A copy of the asbestos abatement work plan and notification shall be submitted to the Engineer and the Owner. An Asbestos Supervisor ensures the Contractor implementation of the Asbestos Control Plan and compliance with the Permit.

E. Traffic Control and Transportation Plan: The Contractor shall prepare a Traffic Control and Transportation Plan and obtain a Traffic Control/Encroachment Permit from the Clark County Public Works Department and/or from the City of Henderson. The plan shall also detail the haul route and contingency planning for accident and spills. A copy of the plan and permit shall be submitted to the Engineer and the Owner.

F. Grading Permit: The Contractor shall obtain a Grading Permit from the Clark County Building Department and comply with such permit requirements. A copy of the permit shall be submitted to the Engineer and the Owner.

PART 2 PRODUCTS

Not Used

PART 3 EXECUTION

Not Used

END OF SECTION 01015

SECTION 01019
PHYSICAL CONDITIONS

PART 1 GENERAL

1.1. SECTION INCLUDES

A. Explanation of information available and procedures for dealing with unforeseen physical conditions.

1.2. INFORMATION AVAILABLE

A. The location of existing underground and aboveground utilities, and structures and obstructions shown on the drawings are taken from existing information and are approximate only. Additional underground structures and obstructions may also exist. Neither the Owner nor the Engineer make any warranty, expressed or implied, as to the accuracy or completeness of utilities or facilities shown on the Drawings. The Contractor shall determine in his own way the obstructions and difficulties to be encountered in the execution of the work under this Contract. The Contractor shall take all measures necessary to protect the underground and aboveground utilities and structures that are to remain from damage during the performance of work. Any damage to underground and aboveground utilities that are to remain as a result of the Contractor's work shall be repaired at no cost to the Owner or Engineer.

B. The Owner may have had surveys, reports, or subsurface investigations performed by the Engineer or other consultants, the results of which are contained in the drawings or in subsurface investigation and other reports. (Available upon written request to the project manager.)

1.3. UNFORESEEN PHYSICAL CONDITIONS

A. Promptly notify the Owner and Engineer in writing of any subsurface or latent physical conditions at the site differing materially from those indicated in the Contract Document.

B. The Engineer will promptly investigate those conditions and if the Engineer finds that there are subsurface or latent physical conditions which differ materially from those intended in the Contract Document, and which could not reasonably have been anticipated by the Contractor, and if the owner concurs with the Engineer's finding, a change order shall be issued incorporating the necessary revisions.

PART 2 PRODUCTS

Not Used

PART 3 EXECUTION

Not Used

END OF SECTION 01019

SECTION NUMBER 01040
PROJECT ADMIN

PART 1 GENERAL

1.1. CONTRACTOR SUPERVISION AND LABOR FORCE

A. The Contractor shall assign one superintendent for the project and at least one foreman during each shift, acceptable to the Project Manager to be on site continuously during Working hours from the start to finish of the project. Contractor shall keep the Project Manager informed of the individuals assigned to the site and the means for contacting these individuals, should the Contractor's assigned individual be off site.

B. Contractor shall use an adequate number of skilled workers who are thoroughly trained and experienced in the necessary crafts and who are completely familiar with the specified requirements and the methods needed for performance of the Work.

C. Contractor shall use experienced professional personnel for that Work which requires the judgment, knowledge and expertise of qualified professionals and who are familiar with all aspects of the Work.

1.2. CONTRACTOR SUBCONTRACT WORK

A. Subcontractors shall cooperate with the Project Manager, Engineer, and CQA TECHNICIAN.

B. Contractor's Superintendent/Foreman shall maintain communication between subcontracted personnel and shall be on site when Subcontractors are on site performing Work.

C. Contractor shall direct Subcontractors.

1.3. PROJECT MEETINGS

A. A pre-construction meeting will be conducted by either the Project Manager or Engineer for the purpose of reviewing the Work scope, discussing the Contractor's schedule and discussing project administration prior to the start of Work. The Contractor shall contact the Project Manager in writing at least five working days prior to the scheduled start of the Work, to schedule the meeting. The meeting shall be held at the job site unless otherwise announced.

B. Weekly scheduled progress meetings will be conducted by Project Manager for the purpose of coordinating and expediting the Work. The date and hour will be announced by the Project Manager at least 48 hours before the scheduled assembly time or on regular basis if agreed to by Contractor. The meetings shall be held at the job site unless announced otherwise.

C. Monthly scheduled project review meetings will be conducted by the Project Manager for the purpose of monitoring the progress of the Work. The meeting will

be scheduled to coincide with the scheduled weekly progress reviews once per month. The Engineer will be in attendance at the monthly project review meetings.

D. It is mandatory that the Contractor be represented at each meeting by a principal member of his staff, authorized to make decisions on his behalf. From time to time, the Project Manager may direct certain Subcontractors to attend the meetings. Failure to attend a meeting does not relieve the Contractor from acting on the contents of the meetings.

E. The essence of the discussions of each meeting shall be entered into the minutes as a matter of record. The CQA TECHNICIAN will take the minutes of the job meetings and, on or before the next meeting, distribute copies of the minutes to all interested parties; namely:

1. The Project Manager.
2. The Engineer.
3. The Contractor.
4. Subcontractors present at the specific meeting.

F. Special meetings may be called at the discretion of the Project Manager or the Engineer for the purpose of resolving problems or for the purpose of discussing specific activities concerning the Work. Attendance at the special meetings is mandatory upon the Contractor, Subcontractors, or other parties notified by the TIMET or the Engineer to attend.

1.4. CONSTRUCTION SCHEDULE

A. Submit with Bid one copy of the Overall Construction Schedule. The schedule shall be time-scaled and shall show the Work activities, including sequences of performance and interdependency. Each activity shall be labeled and include an estimated duration in days. The Overall Construction Schedule shall comply with the required contract completion date stated in the Contract Document and any Work restrictions, including restrictions on days or hours of Work, stated in the Specifications. The Overall Construction Schedule shall be discussed at the pre-construction meeting.

B. On the first Working day of each week submit to the Project Manager and Engineer for review one copy of the Overall Construction Schedule updated to indicate actual progress in percent completion for each activity. The updated schedule is termed the Progress Schedule. In addition to indicating actual progress, the Progress Schedule shall also indicate any changes in completion times or dates for any of the activities shown on the Schedule.

C. Each Progress Schedule shall be submitted with a written narrative describing the revisions, if any, from the previously-submitted schedule, impacts upon the Work and corrective actions taken or proposed by the Contractor.

D. The TIMET's right to review or reject the Contractor's initial Overall Construction Schedule and subsequently-submitted Progress Schedules is for the benefit and protection of the TIMET and Engineer and not a benefit or service for the Contractor. Comments made by the TIMET's representatives on the Schedule, or lack of such comments, or rejection or non-rejection of the Contractor's Schedule does not relieve the Contractor from compliance with the Contract Document, nor do they create any responsibility or duty for scheduling owed from the TIMET or the Engineer to the Contractor. This review, whether accompanied by comments, rejection or neither, is only for general conformance with the schedule concept of the project and general compliance with the information given in the Contract Document.

1.5. WORK HOURS AND COORDINATION

A. Contractor shall perform Work during a work schedule agreed to by the Project Manager and TIMET Liaison at the pre-construction meeting. Starting time will be set by the Project Manager.

B. Contractor shall keep the Project Manager informed, at a reasonable time in advance or as required by specific sections of these Specifications, of the times and places at which he wishes to do Work, so that any checking or oversight deemed necessary may be done with minimum inconvenience to the Project Manager.

1.6. REPORTS

A. The Contractor shall be required, if requested by the Project Manager or Engineer, to submit special reports, including but not limited to:

1. Accident Reports
2. Work Stoppage/Dispute Records
3. Systems-Operable Reports
4. Contractor's Invoices
5. Schedule of Values
6. Weekly Employee Safety Meeting Reports

PART 2 PRODUCTS

Not Used

PART 3 EXECUTION

Not Used

SECTION NUMBER 01050
FIELD-ENG-SURVEY

PART 1 GENERAL

1.1. GENERAL CONTRACTOR RESPONSIBILITIES AND SUBMITTALS

A. Contractor is responsible for all survey work and layout required to perform the WORK.

B. Contractor is responsible for establishing three permanent horizontal control monuments and three permanent benchmarks use by TIMET at the site. Submit proposed location to TIMET prior to establishing control monuments and benchmarks and documentation on each of the monuments after establishment.

C. The Contractor shall immediately, upon entering the site for purpose of beginning work, locate general reference points and take such action as is necessary to prevent their destruction. He shall lay out his own Work and be responsible for all surveys, lines, elevations, and measurements of the Structures and other Work executed by him under the Contract. He must exercise proper preparation to verify figures on the Drawings before laying out Work and will be held responsible for any error resulting from his failure to exercise such precaution.

D. Contractor shall verify grades, lines, levels, locations, and dimensions as shown on Drawings and report any errors or inconsistencies to the Project Manager and Engineer before commencing Work. Starting of Work by Contractor shall constitute acceptance of all existing conditions.

E. Any work done without being properly located may be ordered removed and replaced at the Contractor expense.

F. Contractor is responsible for collecting as-built data, preparing and submitting as-built construction Drawings as specified herein.

G. Survey work to be performed by Contractor shall be certified by a Registered Land Surveyor (RLS) or Professional Engineer (PE), registered in the State of Nevada.

H. Contractor and his employed Land Surveyor shall carefully preserve all monuments, bench marks, monitoring wells, extraction wells, reference points and other facilities. Contractor will be charged with the expense of replacement of any such items destroyed, and shall be responsible for any mistakes or loss of time that may be caused. Permanent monuments or bench marks that must be removed or disturbed shall be protected until they can be properly referenced for relocation. Contractor shall furnish materials and assistance for the proper replacement of such monuments or bench marks at no cost to the TIMET.

1.2. LAYOUT, VERIFICATION AND SUBMITTAL REQUIREMENTS

A. Provide field engineering services as required herein. Utilize recognized Engineering survey practices.

B. Establish elevations, lines and levels as required. Periodically verify layouts.

C. For verification of grades, slopes and material thickness constructed by the Contractor, the Contractor land surveyor shall obtain and document a matrix of survey points as described herein:

1. Existing site conditions - 50-foot grid and all break points and surface features within the construction limits.

2. Excavation grades - 50-foot grid and all break points within the construction limits.

3. Final grades - 50-foot grid and all break points within the construction limits.

4. Final site conditions - ground surface inside and outside of cell and soil stockpiles, and all break points and surface features within construction limits shown on the Drawings - 50-foot grid. Location and extent of all paving and concrete pads.

D. Contractor shall submit survey data for each of the surfaces or layers as described above in an electronic copy of the grade table supplied by the Engineer. The tabulated data shall include the coordinate, elevation, difference from previous elevation (for material thickness checks) and the design elevations. Contractor shall obtain written approval from Engineer prior to the placement of any overlying materials.

1.3. AS-BUILT CONSTRUCTION DRAWINGS

A. Within 10 days or as specified below after Engineer's and Project Manager's approval of a surface or layer, the Contractor's Land Surveyor shall prepare and submit as-built Drawings based on the matrix of survey points obtained for the particular surface or layer. The following Drawings shall be submitted:

1. Existing site conditions.

2. Excavation grade documentation.

3. Base grade documentation.

4. Final site conditions.

B. Each drawing shall contain as a minimum the following items:

1. 2-foot contour interval.

2. Title block with name of project.

3. Plan drawing at 1 inch=50 feet on 24-inch by 36-inch sheets.

4. Identification of surface features such as wells, cleanouts, roads, etc.

C. Drawings are to be submitted in hard copy format and three-dimensional AutoCAD Version 2010 or newer contour file on CD-Rom. In addition, the point data set for each survey performed on which the Drawings are based, shall be submitted in digital form (i.e., .DAT files.)

1.4. OWNER SURVEY RESPONSIBILITIES

A. If necessary, TIMET may employ registered land surveyor licensed in the State of Nevada for verification of Contractors Surveys.

B. All TIMET survey data and related calculations will be available for review by the Contractor.

PART 2 PRODUCTS

Not Used

PART 3 EXECUTION

3.1. GENERAL

A. The Contractor upon mobilizing to the site shall establish three permanent horizontal control monuments and three benchmarks in accordance with the Nevada Department of Transportation Location Division, Survey Standards. The monuments and benchmarks shall meet the Minimum Control and Land Survey Standards for Basic Control.

B. The Contractor upon mobilizing to the site shall perform an initial site survey for confirmation of the existing site conditions, prior to beginning site disturbance activities.

END OF SECTION 01050

ITEM NO.	ITEM	UNIT	DESCRIPTION	MEASUREMENT AND PAYMENT TERMS
01 General Requirements				
1.01	Mobilization	Lump Sum	Work includes, but is not limited to the obtaining all required permits and approvals; mobilization of all personnel, equipment, and materials to the project site. This amount cannot exceed greater than 12% of the total bid amount.	Payment based on 100% completion of the work, or a mutually agreed percentage for progress payment.
1.02	Temporary Facilities and Controls	Lump Sum	Work includes, but is not limited to installation and removal of all temporary facilities; temporary utility connections, parking, sanitary facilities and establishing staging/lay down areas, decon/wash station, equipment servicing and maintenance facilities, access roads, safety items, compliance with Stormwater Pollution Prevention Plan and Dust Control Plan.	Payment based on 100% completion of the work, or a mutually agreed percentage for progress payment.
1.03	Project Submittals	Lump Sum	Work Includes preparation of a Health and Safety Plan and all other Project Submittals and Work Plans.	Payment based on 100% completion of the work, or a mutually agreed percentage for progress payment.
02 Site Preparation				
2.01	Clearing and Grubbing	Lump Sum	Work includes, but is not limited to providing all labor, materials, layout, and equipment required to remove vegetation from work areas. Shake soil from roots. Temporarily stockpile, load, and transport for disposal.	Payment based on 100% completion of the work.

ITEM NO.	ITEM	UNIT	DESCRIPTION	MEASUREMENT AND PAYMENT TERMS
2.02	Transport and Disposal of Vegetation	Ton	Transport and Dispose of Vegetation – Work includes, but is not limited to providing all labor, materials, and equipment required to load and transport vegetation to an off-site disposal facility. Work includes handling and transportation. Tipping fee at landfill will be paid directly by the Owner.	Ton as measured by actual weight slips from certified weight scale. Payment based on 100% completion of the work.
2.03	Cut and Cap Abandoned Pipelines	Lump Sum	Work includes but is not limited to, providing all materials, equipment, layout, labor to locate, cut, remove, and cap interfering abandon buried pipelines that cross the slurry wall and/or infiltration trench limits in accordance with the Specifications, Drawings, or as directed by the Owner/Engineer. The work includes, but not limited to: all excavation, cutting, cleaning, grouting, and capping of the pipes. Also included is backfilling and restoring the surface to its existing condition or as directed on the Drawings. This work also includes pipeline(s) constructed of Asbestos Containing Materials (ACM).	Payment based on 100% completion of the work.
2.04	Protect Active Pipelines	Lump Sum	Work includes, but is not limited to providing all labor, materials, layout and equipment required to locate, shore, and protect active main water process lines during the course of the entire construction project.	Payment based on 100% completion of the work.

ITEM NO.	ITEM	UNIT	DESCRIPTION	MEASUREMENT AND PAYMENT TERMS
2.05	Construct Slurry Wall, Working and Extension Platforms	Lump Sum	Work includes, but is not limited to providing all labor, TYPE II Aggregate material, layout and equipment required to place, compact, and grade working platform to the design grades, slopes, and contours as shown on the drawings.	Payment based on 100% completion of the work.
2.06	Protect Extraction Wells	Lump Sum	Work includes, but is not limited to providing all labor, materials, layout, and equipment required to protect wells not designated for abandonment during the Work.	Payment based on 100% completion of the work.
2.07	Temporary disconnect and/or relocate interfering overhead and underground electrical lines	Lump Sum	Work includes, but is not limited to: providing all labor, materials, layout, and equipment required to: temporarily disconnect and/or relocate and re-establish connection of interfering overhead and underground electrical distribution or service lines.	Payment based on 100% completion of the work.
03 Earthwork				
3.01	Excavate, Load, and Transport of Contaminated Soil and Excess Slurry Trench Spoils	Ton	Work includes, but is not limited to providing all labor, materials, layout, and equipment required to excavate, load, and haul contaminated soils and/or spoils to APEX Landfill for disposal. Work includes handling and transportation. Tipping fee at the landfill will be paid directly by OWNER	Ton as measured by actual weight slips from certified weight scale. Payment based on 100% completion of the work.

ITEM NO.	ITEM	UNIT	DESCRIPTION	MEASUREMENT AND PAYMENT TERMS
3.02	Slurry Wall Construction (from Stations 0+00 to 24+10)	Vertical Square feet	Work includes, but is not limited to providing all labor, materials, and equipment required for construction of the slurry wall in accordance with the technical specifications and to the dimensions, depths, and grades shown on the contract drawings.	Payment shall be made per verified vertical footage completed between stations 0+00 to 24+10. Payment based on 100% completion of the work.
3.03	Imported Clay	Ton	Work includes, but is not limited to providing all labor, materials, transport, and equipment as required for process/blending of imported clay with trench spoils to meet the slurry wall backfill specifications.	Ton as measured by actual weight slip from certified weight scale. Payment based on 100% completion of the work.
3.04	Infiltration Trenches, and Associated Components	Lump Sum	Work includes, but is not limited to providing all labor, materials, layout and equipment required to construct infiltration trenches and associated piping as shown on the drawings.	Payment based on 100% completion and acceptance of the work.
3.05	General Fill	Ton	Work includes, but is not limited to: providing all labor, materials, and equipment required for furnishing, transporting, and stockpiling, placing, compacting and testing, and rough grading of cover soil; per the final restoration grading plan.	Ton as measured by actual weight slip from certified weight scale. Payment based on 100% completion of the work.
04 Site Restoration				
4.01	Final Grading and Site Restoration	Lump Sum	Work includes, but is not limited to providing all labor, materials, layout and equipment required to perform final grading final site restoration, and application of palliative dust control.	Payment based on 100% completion and acceptance of the work.

ITEM NO.	ITEM	UNIT	DESCRIPTION	MEASUREMENT AND PAYMENT TERMS
4.02	Slurry Wall Road Crossing	Lump Sum	Work includes, but is not limited to providing all labor, materials, layout and equipment required to construct the slurry wall road crossing, per the specifications and drawings.	Payment based on 100% completion and acceptance of the work.
4.03	Final Documentation and "As-Built Survey"	Lump Sum	Work includes, but is not limited to providing all labor, materials, survey and equipment required to complete Final Documentation and As-Built drawings.	Payment based on 100% completion and acceptance of the work.
4.04	Demobilization	Lump Sum	Work includes, but is not limited to providing all labor, materials, and equipment to remove temporary facilities, any materials brought to site by contractor that the Owner desires removed, and demobilize from the site.	Payment based on 100% completion and acceptance of the work.

END OF SECTION 01275

SECTION NUMBER 01300
SUBMITTAL PROCEDURES

PART 1 GENERAL

1.1. GENERAL

A. Submittals: On copies of attached Submittal Form.

B. The Engineer will review all submittals solely for the purpose of determining whether the information contained in the submittal conforms to the design concept of the contract documents. The Engineer will return the submittals with the following classifications:

1. Work May Proceed. Reviewed for general consistency with contract documents, no corrections, or marks.

2. Work May Proceed Subject to the Changes Indicated. Re-submittal not required: Minor corrections. Proceed with Work subject to comments and revisions; no re-submittal is required.

3. Work May Not Proceed Indicated Part(s). Re-submittal Required. Work may proceed on other items: Minor corrections. Proceed with work subject to comments and revisions; a re-submittal is required.

4. Work May Not Proceed. Revise and Resubmit. All major corrections or not in conformance with contract documents, correct and resubmit.

5. For Information Only. Items not reviewed or items for which no submittal is required.

C. Engineer's review of submittals for conformance with contract documents does not relieve the Contractor from responsibility with regard to fulfillment of the terms of the Contract and proper and complete performance of the Work in accordance with the requirements of the Drawings, Specification, applicable permits, as well as the general requirements of the Contract Documents.

D. Engineer's review of submittals does not relieve the Contractor from responsibility for errors or omissions in its designs, details, calculations, analyses, test methods, materials, and its sole responsibility for Means and Methods of Construction, and safe and successful construction of the Work.

1.2. SUBMITTAL SCHEDULE

A. See Table 01300-1 - List of Submittals attached at the end of this Section. Submittals are required on the items as described individually in each Section of the Technical Specification. The description of the submittal data is defined in the Technical Specification. The summary of the required submittals contained in Table 01300-1 may not include all required submittals. Provide all submittals required by the Specification even if not listed in Table 01300-1.

1.3. SUBMITTAL PROCEDURES

A. Sequentially number the transmittal form. Revise submittals with original number and a sequential alphabetic suffix. Start sequential numbering with the related Specification number. For example submittal numbered 01111-11-B is the second revision (B) of the eleventh submittal (11) for Section 01111.

B. Identify Project, Contractor, Subcontractor, or supplier; pertinent drawing and detail numbers, and specification section number, as appropriate.

C. Apply Contractor's stamp, signed or initialed, certifying that review, verification of Products required, field dimensions, adjacent construction Work, and coordination of information, are in accordance with the requirements of the Work and Contract Documents.

D. Schedule submittals to expedite the Project, and deliver to Construction Manager, Slurry Wall Construction, Titanium Metals Corporation, Henderson, Nevada. Coordinate submission of related items. Provide five copies to the Engineer of each submittal unless specified otherwise. The Engineer will provide the Owner with one copy of each approved submittal.

E. For each submittal, allow a minimum of 7 workdays, excluding delivery time to and from the Contractor, unless specified otherwise.

F. Identify variations from Contract Documents and Product or system limitations that may be detrimental to successful performance of the completed Work.

G. Provide space for Contractor and Engineer review stamps.

H. Revise, update, and resubmit, identifying all changes made since previous submission. For each re-submittal (in response to Codes 2R or 3), allow the same number of workdays required for the original submittal.

I. The Engineer shall distribute copies of reviewed submittals as appropriate. Instruct parties to promptly report any inability to comply with provisions.

J. Submittals not requested will not be recognized or processed.

1.4. CONSTRUCTION PROGRESS SCHEDULES

A. Submit initial schedule in duplicate as set forth in Schedule I of the Agreement.

B. Revise and resubmit as required.

C. Indicate submittal dates required for shop drawings, Product data, samples, and Product delivery dates including those furnished by Owner and required by Allowances.

1.5. PROPOSED PRODUCTS LIST

A. Within 7 calendar days after date of Notice to Proceed, submit list of major Products proposed for use, with the name of manufacturer, trade name, and model number of each Product.

B. For Products specified only by reference standards, submit Manufacturer trade name, model, or catalog designation, and reference standards.

1.6. SHOP DRAWINGS

A. Submit the number of opaque reproductions that Contractor requires, and required copies, which will be retained by the Owner and Engineer respectively.

B. Shop Drawings: Submit for review. After review, produce copies, and distribute in accordance with the SUBMITTAL PROCEDURES article above and for record documents purposes described in Section 01700.

1.7. PRODUCT DATA

A. Submit the number of copies that the Contractor requires, and copies required by the Engineer and Owner.

B. Mark each copy to identify applicable Products, models, options, and other data. Supplement manufacturers' standard data to provide information unique to this Project.

C. After review, distribute in accordance with the Submittal Procedures article above and provide copies for record documents described in Section 01700.

1.8. SAMPLES

A. Submit samples to illustrate functional and aesthetic characteristics of the Product with integral parts and attachment devices. Coordinate sample submittals for interfacing Work.

B. Include identification on each sample with full Project information.

C. Submit the number of samples specified in individual specification sections, one of which will be retained by Engineer.

D. Reviewed samples that may be used in the Work are indicated in individual specification sections.

TABLE 01300-1 - LIST OF SUBMITTALS

Item	Reference Section	Submittals Required	Due Date or Delivery Time
General Requirements	01015	Dust Control Plan	
		Storm Water Pollution Prevention Plan	
		Transportation Plan	
Project Administration	01040	Overall Construction Schedule	With the bid.
	01040	Progress Schedule	First working day of each week
Field Engineering and Surveying	01050	Horizontal Control and Benchmarks	Within 10 days or as specified by the Engineer
		Existing Site Conditions	Within 10 days or as specified by the Engineer
		Excavation Grade Documentation	Within 10 days or as specified by the Engineer
		Base Grade Documentation	Within 10 days or as specified by the Engineer
		Final Site Conditions	Within 10 days or as specified by the Engineer
Site Health and Safety	01900	Site Safety and Health Plan	Prior to start of site activities
	01900	Material Safety Data Sheets	Prior to start of site activity
	01900	OSHA 29 CFR 1910.120 Certification	Prior to start of site activity
	01900	First Aid and CPR Certification	Prior to start of site activity
Material Management	02080	Excavated Materials Management Plan	10 work days prior to excavation.
	02080	Daily tracking information	Daily
	02080	Records of water disposal	Daily
	02080	Off-site transportation records, including receiving facilities weight slips	Daily
Earthwork	02200	75-lb. sample of granular fill.	10 days prior to commencement of work.
	02200	Chemical Analysis	10 days prior to delivery on site
	02200	QC Lab Test Results	Within 5 days of test.
	02200	Waste weight tickets and manifests	Within 5 days of reciept.

TABLE 01300-1 - LIST OF SUBMITTALS

Item	Reference Section	Submittals Required	Due Date or Delivery Time
Slurry Wall	02320	Qualifications	10 work days prior to commencement of work.
	02320	Slurry Wall Work Plan	10 work days prior to commencement of work.
	02320	Quality Control Plan	10 work days prior to commencement of work.
	02320	Schedule	10 work days prior to commencement of work.
	02320	Installation Records	Daily
	02320	Final Report and As-Built	3 weeks post construction
Geotextile	02415	Manufactures Product Data	10 days prior to delivery of site
Concrete	03060	Concrete Mix Design	10 work days prior to commencement of work.
	03060	QC Test Results	Within 5 days of test results.
HDPE pipe	15079L	Product data	10 work days prior to shipment to site.

PART 2 PRODUCTS

Not Used

PART 3 EXECUTION

Not Used

END OF SECTION 01300

SECTION 01400
QUALITY ASSURANCE AND QUALITY CONTROLS

PART 1 GENERAL

1.1. SCOPE OF WORK

A. Owner's Construction Quality Assurance (CQA) Plan Related to inspection and testing.

B. Contractor's Responsibilities.

C. Engineer's Responsibilities.

D. Construction Inspector's Responsibilities.

E. CQA Technician's Responsibilities.

1.2. OWNER'S CONSTRUCTION QUALITY ASSURANCE

A. The owner shall arrange for construction oversight in the form of inspection and testing activities, to confirm that the construction activities and the completed project comply with the approved Plans, Technical Specifications and Contract Drawings.

B. The Owner shall retain the services of an Engineer to provide construction observation and CQA services.

C. Owner's inspection and testing activities shall consist of the following activities:

1. Daily observation and recording of contractor activities by the CQA Technician.

2. Documenting and observing material excavation, dust control, stockpiling, loading, hauling, and disposal activities.

3. Obtaining material samples for laboratory testing.

4. Observing Contractor's required field testing.

1.3. CONTRACTOR'S RESPONSBILITIES

A. The Contractor is responsible for the Work to be performed in strict accordance with the Technical Specifications and Drawings, using the necessary construction procedures and techniques. The Contractor is also responsible for coordinating, supervising and overseeing Subcontractors as needed, who are and employed by the Contractor to perform construction related activities.

B. The Contractor shall perform testing deemed necessary to satisfy requirements of the Technical Specifications related to off-site materials prior to delivery of said materials to the site. Materials that do not meet the requirements shall be removed from the site at the expense of the Contractor.

C. The Contractor shall cooperate with the Project Manager, Engineer, and the CQA Technician in furnishing material samples and in providing assistance in their performance of the on-site inspection and testing activities.

D. The Contractor shall assure that all submittals required by the Contract Documents for the Contractor or his Subcontractors are completed within the times specified. Failure to do so will result in withholding of payment.

E. The Contractor shall perform or arrange for all survey and layout work to be performed, and for documentation to be obtained, in accordance with the applicable section of these Technical Specifications.

1.4. ENGINEER'S RESPONSIBILITIES

A. The Engineer is responsible for making any necessary design changes, approving Contractor's submittals, reviewing the CQA Technicians' written reports, reviewing material test reports, and preparing the Construction Documentation Report and Drawings.

B. The Engineer is responsible for assisting the Project Manager in modifying construction site activities and specifying specific corrective measures in cases where there is deviation from the specified design or failure to meet design criteria of Technical Specifications and Drawings. In cases where design changes require approval of a regulatory agency, the Engineer will assist the Project Manager in obtaining said approval.

1.5. PROJECT MANAGER'S RESPONSIBILITIES

A. The Project Manager is responsible for confirming construction compliance with the Technical Specifications and Project Drawings by performing observations, inspections, verifications, and documentation activities.

1.6. CQA TECHNICIAN'S RESPONSIBILITES

A. The CQA Technician is responsible for observing and performing testing during the construction activities. The CQA Technician will assist the Project Manager and Engineer in their responsibilities.

PART 2 PRODUCTS

NOT USED

PART 3 EXECUTION

NOT USED

END OF SECTION 01400

SECTION 01500
SITE REQUIREMENTS, CONSTRUCTION FACILITIES, AND TEMPORARY CONTROLS

PART 1 GENERAL

1.1. SCOPE OF WORK

A. General Site Requirements including use of site facilities, protection of personnel and equipment.

B. Site Specific Requirements including security, access roads, parking, fire protection and emergencies, archaeological or historic relics.

C. Construction Facilities including field offices and structures, laydown and equipment storage locations, temporary utilities, sanitary facilities.

D. Temporary Controls including dust, water and erosion controls, barriers, enclosures, fencing, protection of the Work, cleaning.

1.2. USE OF SITE FACILITIES

A. Contractor shall assume that all existing facilities are and will remain in service during the performance of the Work, unless specifically identified in the Contract Document or as coordinated by the Project Manager or TIMET.

B. Contractor shall avoid traffic conflict with operations and vehicles of the TIMET's or the TIMET's agents at the site, by limiting access to the routes as directed by the TIMET or Project Manager.

1.3. SECURITY

A. Admittance of Contractor employees and equipment to be coordinated with TIMET at least five working days prior to the date when work is to begin.

B. Security is not provided by the OWNER for Contractor property.

C. TIMET maintains a comprehensive security program to provide protection for TIMET, personnel and property, to prevent risk to public health and safety, and to assure reliable service to its customers. All security procedures apply to the Contractor and their employees who perform work at TIMET facilities and sites and are intended to support the stated objectives of the TIMET security program.

1.4. ACCESS ROADS AND PARKING

A. CONTRACTOR shall construct and maintain temporary roads necessary to perform the work within the construction area or as shown on the DRAWINGS or as directed by the TIMET.

B. Existing on-site roads used within designated construction limits for construction traffic, as approved by the TIMET, shall be restored to their original condition upon completion of the construction activities.

C. Existing on-site roads outside of construction limits which share construction and operations traffic shall be restored by TIMET at completion of the work.

D. Parking areas at the site shall be designated by the TIMET.

1.5. FIRE PROTECTION AND EMERGENCIES

A. Contractor shall furnish and maintain a suitable type and amount of portable fire extinguishers or carts.

B. Contractor shall abide by the TIMET emergency notification and operating practices for emergency situations. These practices will be discussed at the pre-construction meeting.

1.6. FIELD OFFICES AND STRUCTURES

A. Contractor shall provide a temporary field office sufficient to conduct construction meetings with a minimum of eight people.

B. Contractor shall provide necessary temporary sheds or other storage facilities to accommodate Contractors supply and storage needs.

C. TIMET shall direct the location for Contractor placement of field offices and structures.

1.7. TELEPHONE SERVICE

A. Contractor shall provide, maintain and pay for telephone service to the site from project start to completion. Possession by the Contractor designated on-site superintendent or foreman of a cellular phone is acceptable to meet this requirement.

1.8. TEMPORARY UTILITIES

A. Electricity

1. Contractor shall arrange for temporary electrical service as needed.

B. Water

1. Contractor shall furnish drinking water as required.

2. Non-potable water required for the WORK, will be available free of charge at presently available outlets and pressures as shown on the drawings.

1.9. SANITARY FACILITIES

A. Provide temporary sanitary toilet facilities conforming to state and local health and sanitation regulations in sufficient number for use by Contractor and Subcontractor employees.

B. Maintain in sanitary conditions and properly supply with toilet paper.

1.10. LAYDOWN AND EQUIPMENT STORAGE LOCATIONS

A. Contractor shall park equipment and store materials only in those areas designated on the Drawings, specified in the Contract Document, or as directed by TIMET.

B. Areas disturbed by the Contractor shall be restored to their original condition upon project completion.

1.11. DUST AND MUD CONTROLS

A. Contractor shall conduct operations and maintain the site to minimize the creation and dispersion of dust and mud.

B. Contractor shall provide on-site, the equipment necessary to control dust generation resulting from wind effects on open stockpiles and excavations, and from Contractor vehicle and equipment traffic while both on and accessing the site. The means to control such dust is by the application of water to affected areas, such that the surfaces are moistened to prevent dust from becoming a nuisance to the public, neighbors and concurrent performance of other Work at the site.

C. Dust control watering shall be conducted by the Contractor seven (7) days a week until completion of construction activities.

D. Contractor shall control mud and tracking of mud both on and off the site by providing stone and grade and fill areas to prevent tracking.

1.12. WATER AND EROSION CONTROLS

A. Contractor shall grade the site to drain in accordance with the final grading plans shown on the Drawings.

B. Contractor shall provide, maintain and erosion control to prevent water from leaving property.

C. Contractor shall protect installed Work and provide special protection where specifically in the Technical Specifications.

D. Contractor shall provide barriers to prevent unauthorized entry to construction and staging areas as necessary and shall protect existing facilities and adjacent properties from damage from construction operations.

1.15 PROGRESS CLEANING

A. Contractor shall maintain areas free of waste materials, debris and rubbish. The site shall be maintained in a clean and orderly condition.

B. Contractor shall remove waste materials, debris and rubbish from the site weekly and dispose off-site.

PART 2 PRODUCTS

NOT USED

PART 3 EXECUTION

NOT USED

END OF SECTION 01500

SECTION 01560
PROTECTION OF ENVIRONMENT

PART 1 GENERAL

1.1. SUMMARY

A. Contractor, in executing Work, shall maintain Work areas on- and off-Site free from environmental pollution that would be in violation of federal, state, or local regulations.

1.2. PROTECTION OF STORM SEWERS

A. Prevent construction material, pavement, concrete, earth, or other debris from entering existing storm sewer or sewer structures.

1.3. PROTECTION OF WATERWAYS

A. Storm Water Pollution Prevention Plan: Contractor shall prepare a Storm Water Pollution Prevention Plan and obtain approval from the Nevada Division of Environmental Protection. The Engineer shall ensure Contractor implementation and compliance with the Storm Water Pollution Prevention Plan.

B. Observe rules and regulations of State of Nevada and agencies of US Government prohibiting pollution of lakes, streams, rivers, or wetlands by dumping of refuse, rubbish, dredge material, or debris.

C. Comply with procedures outlined in US EPA manuals entitled, "Guidelines for Erosion and Sedimentation Control Planning and Implementation," Manual EPA 72-015 and "Processes, Procedures, and Methods to Control Pollution Resulting from All Construction Activity," Manual EPA 4309-73-007.

1.4. PROTECTION OF AIR QUALITY AND DUST CONTROL

A. Dust Control Permit: Contractor shall prepare a Dust Control Plan and obtain a Dust Control Permit from the Clark County Department of Air Quality. A copy of the plan and permit shall be submitted to the Engineer and Owner. The dust control monitor shall ensure Contractor implementation of the dust control plan and compliance with the Dust Control Permit.

B. Minimize air pollution by requiring use of properly operating combustion emission control devices on construction vehicles and equipment and encourage shutdown of motorized equipment not in use.

C. Do not burn trash on the Site.

D. Dust control is the responsibility of the Contractor.

1.5. USE OF CHEMICALS

A. Submit material safety and data sheets (MSDS) for all chemicals prior to bringing it on Site.

B. Chemicals used during project construction or furnished for project operation, whether herbicide, pesticide, disinfectant, polymer, reactant, or of other classification, shall be approved by US EPA or US Department of Agriculture or any other applicable regulatory agency.

C. Use and disposal of chemicals and residues shall comply with manufacturer's instructions.

1.6. NOISE CONTROL

A. Conduct operations to cause least disturbance to residents in vicinity of Work, and comply with applicable local ordinances.

B. Equip compressors, hoists, and other apparatus with mechanical devices necessary to minimize noise and dust. Equip compressors with silencers on intake lines.

C. Equip gasoline or oil-operated equipment with silencers or mufflers on intake and exhaust lines.

D. Conduct hauling operations so as equipment causes a minimum of noise and dust.

1.7. FUELS AND LUBRICANTS

A. Contractor to comply with all local, state, and federal regulations concerning the transportation and storage of fuels and lubricants.

B. A fuel storage and equipment refueling area shall be designated by Owner. The Contractor shall be and remain liable for compliance by its employees, agents, and Subcontractors that all refueling take place in the designated area. Containment requirements shall be submitted by Contractor for approval in writing by Owner.

C. All spills or leakage shall be reported to Owner and Contractor shall be responsible for cleanup and proper disposal, as required.

D. Owner reserves the right to order damaged or leaking equipment off-Site.

PART 2 PRODUCTS

Not used.

PART 3 EXECUTION

Not used.

END OF SECTION 05160

SECTION 01900
SITE HEALTH AND SAFETY

PART 1 GENERAL

1.1. SECTION INCLUDES

A. Disclosure - Chemical Characteristics.

B. Health and Safety Plan.

C. Public Safety.

D. Excavations.

E. Security

1.2. REFERENCES

A. Code of Federal Regulations:

1. 29 CFR 1910 Occupational Safety and Health Standards.

2. 29 CFR 1926 Safety and Health Regulations for Construction.

3. 40 CFR Parts 61 and 63 National Emissions Standards for Hazardous Air Pollutants (NESHAPs).

1.3. SUBMITTALS

A. Quality Control Submittals.

1. General.

a. Submit prior to the start of Site activities.

2. Health and Safety Submittals.

a. Submit Site Health and Safety Plan, not for approval, but as evidence of compliance with state and federal requirements.

b. Submit material safety data sheets (MSDS) for all chemicals brought onto the Site.

3. Certification Submittals.

a. Documentation that Site personnel and supervisors have been trained as required by OSHA 29 CFR 1910.120.

b. Documentation that at least two Site personnel per work shift have current training in first aid and CPR.

1.4. HEALTH AND SAFETY PLANS

A. Develop and implement a Site Health and Safety Plan meeting the requirements of 29 CFR 1910.120, 29 CFR 1926 and other applicable federal, state and local regulations.

B. Prepare the plan specifically for the Site and the anticipated activities based on available information on Site conditions and hazards including as minimum:

1. Organizational structure.
2. Comprehensive Work Plan.
3. Hazard analysis for each Site task.
4. Employee training.
5. Personal protective equipment to be used for each task.
6. Medical surveillance.
7. Site control measures and action level response requirements.
8. Decontamination procedures.
9. Emergency Response Plan
10. Confined space entry procedures (if part of scope of work).
11. Spill containment program.

C. The plan shall be considered a living document, updated as conditions change during Project execution.

D. On-Site Work shall not begin until the plan has been prepared and implemented.

E. Include the following in the implementation portion of the plan:

1. Monitoring for flammable atmospheres in the Work area including excavations.
2. Monitoring of atmosphere for toxic vapors.
3. Monitoring for other hazards commonly associated with construction activities.

F. Prepare and comply with a Project specific Health and Safety Plan. Approve the Health and Safety Plan by signature of a designated Contractor representative and provide to Engineer upon request prior commencing Site Work activities. Contractor shall be and remain liable for compliance by its employees, agents and Subcontractors with the Contractor's Health and Safety Plan and procedures for the Site and shall hold Engineer and Owner harmless from all claims, damages, suits, losses and expenses in any way arising from non-compliance with the Health and Safety Plan.

G. Notify Engineer of any chemical products to be used by Contractor while on the Project Site premises and furnish MSDS for the chemical products, to Engineer, before any such chemicals are brought on the Site premises throughout the duration of this Agreement. Comply with standards set in Title 29 CFR 1910.1200 in providing such notifications and MSDS.

H. Provide all necessary safety equipment needed to perform the required Work. Provide and properly utilize adequate ventilation and personal protection equipment, including respirators as required according to OSHA regulations.

I. Follow confined space entry procedures for personnel entering any excavations, sewers, manholes, vaults, pipes, or tanks on Site, where they are required by OSHA.

J. Provide a combustible gas/oxygen deficiency indicator to monitor the breathing zones of the Work areas.

K. Train personnel in the use, limitations, and proper fit of all necessary safety equipment.

L. Follow appropriate measures to guard against cold- and heat-related hazards, including frost-bite, hypothermia, heat stroke, heat exhaustion, and heat cramps. Be prepared to treat these hazards if encountered.

1.5. PUBLIC SAFETY

A. Protect finished and unfinished Work against any damage, loss, or injury during the performance of and up to the completion day of the Work.

B. Provide adequate protection around all openings wherever required to safeguard the Work or the public.

C. Protect all openings and surface obstructions with barricades, signs, and warning devices in accordance with local, state, and federal requirements.

D. Place barricades at a reasonable distance from the location of the obstruction when a street is closed or there is impedance to traffic. Signs and barricades: clearly visible at all times and conforming to federal, state, and local standards.

1.6. PERSONNEL ORGANIZATION, QUALIFICATIONS AND RESPONSIBILITIES

A. Designate the safety representative per the general conditions, a Site safety and health officer and at least one alternate.

B. The Site safety and health officer shall:

1. Implement and enforce the Site Health and Safety Plan.

2. Provide hazard communication information.

3. Be responsible for any safety environmental monitoring.

4. Have the authority to stop Work activities if unacceptable health or safety conditions exist.

5. Coordinate and recommend corrective actions for identified health or safety deficiencies and oversee the corrective actions.

6. Be on-Site during sediment dewatering activities.

C. Training

1. As a minimum, personnel performing duties with potential for exposure to on-Site contaminates shall meet and maintain the following 29 CFR 1910.120 and 29 CFR 1926 training requirements:

   a. 40 hours of off-Site health and safety training for hazardous waste.

   b. 3 days actual field experience under the direct supervision of a trained, experienced supervisor.

   c. 8 hours refresher training annually.

2. The Site Safety and Health Officer shall have an additional 8 hours management and supervisor training in accordance with 29 CFR 1910.120 and 29 CFR 1926.

1.7. EXCAVATIONS

A. Form sidewalls of excavations to provide a stable and safe working environment in the base of the excavation.

B. Provide sheeting and bracing or properly sloped excavations as required by all applicable federal, state and OSHA codes, and as may be necessary to protect life or property.

C. Eliminate activity around the top of the excavation, particularly the use of heavy equipment and machinery, while personnel are within the excavation.

D. Erect and maintain a 4-foot high fence around unattended excavations with slopes steeper than 3:1 (horizontal:vertical).

E. Current regulations promulgated by the Occupational Safety and Health Administration (OSHA) require that employers whose employees enter excavations have a "competent person" conduct inspection of these excavations and review supporting system. See 29 CFR Part 1926 (Subpart P). In the event that the Work defined by this Agreement includes an excavation into which workers may enter, Contractor shall furnish a properly qualified "competent person" and shall be responsible for the duties of inspection and/or monitoring of excavations required of the "competent person" under 29 CFR Part 1926 (Subpart P).

1.8. SITE SECURITY

A. Site Security will be provided by the OWNER.

B. Contractor shall provide a small office space for OWNER’s security guard and supply power (generator) for lights and HVAC.

C. Contractor must comply with TIMET's safety and site policies at all time. All access gates must be closed/locked whenever not in use.

D. All Contractor personnel must obtain a "BLUE" security access card to work on the site. Please contact George Onorato, P.E – (813) 404-6688 to arrange for on-site training to obtain the Blue Access card.

PART 2 PRODUCTS

Not used.

PART 3 EXECUTION

Not used.

END OF SECTION 01900

SECTION 02080
EXCAVATED MATERIAL MANAGEMENT

PART 1 GENERAL

1.1. SCOPE OF WORK

A. Excavation, handling, stockpiling, and off-Site transportation and disposal, and tracking and documenting of excavated material.

B. Prepare an Excavated Materials Management Plan.

C. Provide minimum and contingency equipment decontamination.

D. Comply with all applicable regulations and recognized standards and regulatory practices.

1.2. RELATED SECTIONS

A. 01610 – Health and Safety

B. 02200 – Earthwork

C. 02320 – Slurry Wall

1.3. RESPONSIBILITIES

A. Contractor's Responsibilities:

1. Establish and maintain Site controls to prevent cross contamination to and from the remediation area.

2. Excavate, stockpile, load, transport and dispose of excess soil, rubble, and debris.

3. Load excavated soil directly onto trucks for transport, or temporarily place materials into stockpiles within a materials management area, which should be within the footprint of the slurry wall construction remediation area. Maintain stockpiles and the materials management area.

4. Cover all stockpiles left out overnight with polypropylene tarp and anchor to protect against wind forces.

5. Prepare all documentation and/or permits required for off-Site disposal of excess soil, rubble, and debris based on information provided by the Owner.

6. Decontaminate tools and equipment.

7. Provide all local, state, and federal permits required for Work described in this Section.

B. Engineer's Responsibilities:

1. Review and approve Excavated Materials Management Plan.

2. Review proposed disposal facilities and disposal documentation.

3. Perform all field, mechanical, and analytical testing required to characterize the excavated material for reuse and/or off-Site disposal.

C. Owner's Responsibilities:

1. Provide characterization of waste stream; obtain waste disposal approval, and pay disposal tipping fees.

2. Sign shipping documents as the designated generator for all material reused, recycled, or disposed of off-Site.

1.4. APPLICABLE REGULATIONS

A. Conduct the Work in accordance with relevant regulations and policies, including, but not limited to:

1. Asbestos Waste Transportation, Nevada Administrative Code (NAC) 444.972.

2. Safety and Health Regulations for Construction subtitle "Excavations" 29 CFR 1926.651

3. Hazardous Waste Operations and Emergency Response, Federal Occupational Safety and Health Act (OSHA), 29 CFR 1910.120.

4. The Toxic Substances Control Act (TSCA), 40 CFR 760 and 761.

B. Store, handle, transport, and dispose of excavated materials in accordance with laws, codes, ordinances, and regulations of federal, state, and municipal authorities having jurisdiction. The Owner and the Engineer will not be responsible at any time for the Contractor's violation of any applicable regulations, or endangerment of laborers or others.

1.5. SUBMITALLS

A. Submit to the Engineer for approval an Excavated Materials Management (EMM) Plan. Allow ten (10) business days for Engineer's review of EMM Plan. Do not begin excavation activity until the Engineer approves the EMM Plan. Include in the EMM Plan:

1. A staging area(s) and contamination control plan.

2. Work sequencing plan

3. Location(s), design, and operating Plan for managing the excavation, loading, and equipment operation in order to prevent cross-contamination to and from the remediation area and transportation routes. Include proposed stockpile locations and secondary cover/containment provisions.

4. Procedures for stockpiling, and transporting excavated material.

5. Material tracking sheets for documenting the excavation, stockpiling, and final disposition of all excavated material.

6. Design an operating plan for contingency decontamination station. Include method of recording volume of discharge or disposal of decontamination water.

7. Monitoring and control measures for dust and storm water runoff.

8. Name, location, and classification of the proposed disposal, reuse, or recycling facilities for all classes of material described in Paragraph 3.3. Include a copy of each facility's permit (if applicable), acceptance criteria, and required sampling frequency and parameters for characterization for acceptance. Submittal shall include written confirmation from the disposal facility that they will accept the material if it meets their requirements.

9. Name, address, and license number of hauler who will transport material.

10. Brief description of the truck liners and covers that will be used to contain ACM and prevent leakage and dust blow off during transport of excavated materials.

B. Submit to the Engineer at the end of each day, excavated material and stockpile tracking information for each day, as specified in paragraph 3.4A of this section.

C. Submit records of decontamination water discharge and/or disposal.

D. Within 3 business days after transport off-Site, submit completed shipping records signed by the transporter and receiving location for all excavated materials. Include copies of the receiving facility's weight slips.

PART 2 PRODUCTS

2.1. STORAGE OF EXCAVATED MATERIALS

A. Provide a minimum 10-mil-thick polyethylene sheeting to completely cover the stockpiles. If required by the Engineer, provide a minimum 10-mil-thick polyethylene sheeting beneath soil stockpiles. Stockpile sheeting shall be UV resistant, cold crack resistant to minus 40 degrees Fahrenheit, and free of holes and foreign matter.

B. Provide secondary containment such as berms or hay bales to prevent sediment in runoff from leaving the materials management area(s).

2.2. DECONTAMINATION

A. Provide materials and equipment for minimum decontamination, and, if required by the Engineer, contingency decontamination:

1. Minimum decontamination: provide a temporary, low pressure water system for decontamination of tools and equipment including clean water supply tank, water, hoses, and brushes, which the Contractor shall use to

decontaminate tools and equipment at the end of every day of excavation of impacted materials, and before tools and equipment leave the Site. Connection to potable water supply is acceptable with written permission of the connection's owner/operator. Decontamination water from low-pressure system shall be collected and transported for treatment at the on-Site water treatment facility.

2. Contingency decontamination: if required in the opinion of the Engineer, construct and operate a decontamination pad of a minimum length to fit one 18-wheel dump trailer, and a minimum area to accommodate the largest piece of equipment to be used during excavation. Include a 6 inch containment berm, two layers of a minimum 20-mil plastic liner covered with crushed stone, and provisions for drainage, storage, and decontamination water disposal at the on-Site water treatment facility.

PART 3 EXECUTION

3.1. GENERAL

A. Immediately notify the Engineer of visible stains or unnatural odor of any excavated material, or if oil or potentially hazardous material is encountered.

B. Transport all excavated material to the materials management area, except those identified by the Engineer as appropriate for direct loading, transporting, and off-Site disposal.

C. Provide dust and storm water control measures. Prevent discharge of stockpiled material to storm drains and sewers. Control measures may include, but are not limited to, temporary berms, hay bales, and temporary covers. Remove control measures upon completion of the Work.

3.2. STOCKPILING

A. Provide the Engineer access to perform headspace analyses, field testing, or other testing if desired. Results of the testing analyses shall be exchanged between the Contractor and the Engineer.

B. Disposal of material that is contaminated as a result of careless handling or use of unauthorized procedures shall be at the Contractor's expense. Delays of Work resulting from temporary storage of excavated material, regardless of field classification by the Engineer, shall be at no additional cost to the Owner.

3.3. OFF-SITE TRANSPORT AND DISPOSAL

A. Load and transport all identified impacted materials to the appropriate off-Site disposal facilities as approved by the Owner.

B. Person(s) transporting the excavated materials shall be licensed and permitted to transport such material in state(s) having jurisdiction.

C. Trailers used for transport shall have covers to prevent dust fly off.

D. If necessary, dewater excavated materials prior to transport to prevent free water from developing during transport.

E. Do not transport excavated materials to any location that is not pre-approved by the Owner and Engineer.

F. Submit completed shipping paperwork, including facility weight slips, to the Owner within 3 business days of the transport.

G. Approved Disposal Facilities include:

1. Republic Services, Inc., Apex Regional Landfill, 13550 North Highway 93, PO Box 751600, Las Vegas, Nevada 89736, (702) 644-4210 for non-hazardous material.

3.4. DECONTAMINATION

A. Minimum decontamination: decontaminate tools and equipment prior to tools and equipment leaving the Site, including a truck wheel wash if required by the opinion of the Engineer. Decontaminate all tools, heavy machinery, and excavating and hauling equipment used during excavation, stockpiling, and re-handling of excavated material. Decontaminate by hosing down tools, equipment, and machinery using the low-pressure water system.

B. Contingency decontamination: if contingency decontamination is necessary in the opinion of the Engineer, construct, operate, and maintain a decontamination pad for equipment and vehicles entering and exiting the Work area.

1. Construct the decontamination pads as specified in paragraph 2.2 of this section, and in accordance with the following:

a. Include wash down equipment including brushes and a supply of high-pressure (90 psi minimum) water and pressurized steam.

b. Provide a splashguard, 6-inch containment berm, and drainage system to collect and contain all decontamination pad wash water.

c. The use of drums or fractionation tanks for the storage of decontamination water is acceptable.

d. Decontamination water collection and storage units shall not leak.

e. Provide an area to store clean and spent decontamination water, and any resulting delays in the Work shall be at no additional cost to the Owner.

2. Place the decontamination pad in the areas of excavation and loading of impacted materials. Operate and maintain the decontamination station.

3. Decontaminate excavation equipment, vehicles, and tools used in the excavating and stockpiling areas using high-pressure water and steam prior to leaving the excavation area. Remove all visible material and dust during

decontamination. Decontamination is not acceptable if any amount of oil/hazardous material is present on the tools, equipment, or machinery after decontamination. The Engineer may conduct visual inspections and field testing to determine the acceptability of decontamination.

4. All decontamination water must be collected and disposed of at the on-Site water treatment facility.

5. At the completion of the excavation Work, dismantle and legally dispose of decontamination station. Steam clean the decontamination pads prior to dismantling, and transport decontamination liquids to the on-Site water treatment facility.

END OF SECTION 02080

SECTION 02200
EARTHWORK

PART 1 GENERAL

1.1. SECTION INCLUDES

A. Handling, loading and transporting contaminated soils.

B. Providing, placing, compacting, and grading Work.

1.2. RELATED SECTIONS

A. Excavated Material Management, Section 02180.

B. Slurry Wall, Section 02260

1.3. SUBMITTALS

A. Soil materials: submit 75-lb samples and results of recent (within previous month) testing laboratory grain size analyses for imported soils, material must conform to the specified gradations or characteristics, as specified herein.

B. Chemical analysis confirming the proposed granular fill is not contaminated.

C. QC laboratory testing data (proctor analyses and field compaction test results)

D. Copies of weight tickets and haul manifest for all wastes sent to APEX Landfill.

1.4. EXISTING CONDITIONS

A. Site Information:

1. Subsurface explorations have been performed at the Project Site. Boring logs are presented in Appendix A.

2. The Contractor may perform additional test borings and other explorations at no cost to Owner.

B. Existing Utilities:

1. It is the Contractor's responsibility to locate the exact location of existing underground utilities in areas of Work, and must provide adequate means of support and protection during all earthwork operations.

2. Should uncharted piping or other utilities be encountered during excavation, consult utility owner immediately for directions. Cooperate with Engineer/Owner and utility companies in keeping respective services and facilities in operation. Repair damaged utilities to satisfaction of utility owner.

3. Do not interrupt existing utilities serving facilities occupied and used by Owner or others during occupied hours, except when permitted in writing by

Owner and then only after acceptable temporary utility services have been provided.

4. Provide minimum of 48-hour notice to Owner, and receive written notice to proceed before interrupting ANY active utility.

C. Existing extraction wells: identify, mark, and protect existing ground water extraction wells located within the Work zone.

1.5. LAYOUT AND GRADES

A. Lay out all needed lines and grades not presently established at the Site in accordance with the Contract Documents. Establish permanent benchmarks by employment of a registered land surveyor or professional civil engineer. Maintain all established bounds and benchmarks and replace any that are destroyed or disturbed. Bring any deviations from the locations and elevations indicated on the Drawings to the attention of the Engineer immediately.

B. Verify all existing ground surface elevations within the contract limits.

PART 2 GENERAL

2.1. SOIL MATERIALS

A. General Fill (source: Boulder Ranch Quarry): Granular soil USCS classifications SP, SW, SM, or SC with a maximum of 25 percent passing the number 200 sieve.

GENERAL FILL	
Sieve Size	Specification Range
3"	100%
1"	75-100%
1/2"	60-100%
#4	50-90%
#16	25-50%
#40	15-35%
#200	5-25%

B. Type II Aggregate Base (source: Jericho Pit), USCS Classification GP-GM, color red, non-plastic, and having the following gradation range;

TYPE II Aggregate	
Sieve Size	Specification Range
1"	100%
3/4"	90-100%
#4	35-65%
#16	15-40%
#200	2-10%

C. Clay (source: Boulder Ranch Quarry): USCS Classification ML-CL, color red, low plasticity, and having the following gradation range:

CLAY/SILT	
Sieve Size	Specification Range
1"	100%
#30	99-100%
#50	95-100%
#100	80-100%
#200	40-80%
#270	10-50%

D. Required analytical: provide at least one representative composite sample for every 5,000 cubic yards of imported clean material brought to the Site: required analytical parameters list is as follows:

Parameters	Analytical Methods
Ions (bromide, bromine, chloride, chlorine (soluble), chlorite, fluoride, nitrate, nitrite, orthophosphate, and sulfate)	EPA 300.0/300.1
Perchlorate	EPA 314.0
RCRA 8 Metals	EPA 6020/6010B
Organochlorine Pesticides	EPA 8081A
Semi-volatile Organic Compounds	EPA 8270C
Asbestos Analyses by PLM	EPA Method 600/R-93/116 Section 2.3

2.2. USE OF SOIL MATERIALS

A. General fill – the general fill material shall be used for restoration filling and final grading of cover soil, as indicated on Drawings sheets C11 through C13.

B. Type II aggregate – shall be used for construction of any required “clean” road surfaces and for construction of the slurry wall working platform.

C. Clay – shall be used for mixing and blending of the slurry wall backfill material to meet the required backfill gradation limits.

PART 3 EXECUTION

3.1. GENERAL

A. Perform excavations in accordance with the design Drawings.

B. Protect existing structures, utilities, monitoring wells, extraction wells, sidewalks, pavements, and other facilities not designated for removal from damage by equipment, settlement, undermining, washout, and other hazards created by earthwork operations.

C. Perform any excavation Work in compliance with OSHA guidelines and regulations.

3.2. EXCAVATION

A. Excavation is "unclassified" and includes excavation to subgrade elevations indicated regardless of character of materials and obstructions encountered and shall be understood to include rock, earth, fill, foundations, pavements, curbs, piping and debris.

B. Excavation subgrade: conform to elevations and dimensions shown within a tolerance of plus or minus 0.50 feet.

3.3. DEWATERING

A. Dewatering is prohibited.

3.4. TESTING FOR COMPACTION

A. Compact soil to not less than the following percentages of maximum dry density determined in accordance with ASTM D1557, Method C. Compact soil using the lift thicknesses indicated.

1. General Fill: compact each lift to 92% of the modified Proctor maximum dry density with a nominal lift thickness of 12 inches.

2. Determine the density of soil in place by the sand cone method, ASTM D 1556, or by nuclear methods, ASTM D 6938. A compaction test shall be performed on an approximate 100-foot grid (1 test per 10,000 square foot of backfill area).

3. Determine laboratory moisture-density relationship of a representative soils sample in accordance with ASTM D 1557, Method C every 5,000 cubic yards.

3.5. BACKFILL

A. Place acceptable soil material in layers to required grade elevations for each area classification listed below using granular fill.

B. Backfill excavations as promptly as Work permits, but not until completion of the following:

1. Quality control and quality assurance testing, and approval.
2. Removal of shoring and bracing, and backfilling of voids with satisfactory materials, if applicable.

C. Placement of fill (expect for slurry wall):

1. Do not place fill on surfaces that are saturated, soft or muddy.
2. Place fills in level, uniform layers.

3.6. GRADING

A. Uniformly grade areas within limits of grading under this section including adjacent transition areas. Smooth finished surface within specified tolerances, compact with uniform levels or slopes between points where elevations are indicated, or between such points and existing grades.

3.7. FIELD QUALITY CONTROL

A. Contractor shall correct deficiencies to meet Contract Documents. If Specification criteria cannot be met, or unusual weather conditions hinder Work, Contractor shall develop and suggest solutions to Engineer for approval.

B. Contractor shall schedule appropriate retests when defect has been corrected. Retests by Engineer shall verify that defect has been corrected before any additional Work is performed by Contractor in area of deficiency.

3.8. FIELD QUALITY ASSURANCE

A. Quality assurance testing during construction: allow Engineer to test and observe subgrades and backfill layers before further construction Work is performed.

B. If, in the opinion of the Engineer, based on testing and observation, fills have been placed below specified percent compaction, provide additional compaction at no additional expense.

3.9. QUALITY ASSURANCE TESTING

A. Quality assurance testing of granular materials shall be performed to document material used on Site. The following tests shall be conducted:

1. Particle size analysis (ASTM D 1140, D 422) at a rate of one per 5,000 cubic yards of in-place material.
2. Moisture density relationship ASTM D 1557 Method C at a rate of 1 test per 5,000 cubic yards of in-place material.

B. Materials not in conformance shall be removed and replaced at no cost to the Owner.

3.10. PROTECTION AND REPAIR

A. Protect newly graded areas from traffic and erosion. Keep free of trash and debris.

B. Repair and reestablish grades in settled, eroded, and rutted areas to specified tolerances.

C. Where completed compacted areas are disturbed by subsequent construction operations or adverse weather, scarify surface, reshape, and compact to required percent compaction prior to further construction.

END OF SECTION 02200

SECTION 02320
SLURRY WALL

PART 1 GENERAL

1.1. SECTION INCLUDES

A. The Work consists of furnishing all plant, labor, equipment, and materials and of performing all operations as required to construct the slurry trench cutoff wall.

B. Supply all labor, equipment, materials to blend approved imported clay, as required, to augment to the upper 30 feet of trench spoils to increase the fines content (passing # 200 sieve) to a minimum of 30 percent.

1.2. RELATED SECTIONS

A. Excavated Material Management, Section 02180.

B. Earthwork, Section 02200

1.3. EXISTING CONDITIONS

A. Site Information:

1. Subsurface explorations have been performed at the Project Site. Logs of soil borings performed in the Project area are contained in Appendix A. The Contractor may perform additional test borings and other explorations at no cost to Owner. A summary of the geotechnical investigation data and known interfering utilities along the alignment is presented on the geologic profiles of the Design Drawings.

2. Slurry wall mix design and compatibility data have been performed using various bentonite and cement products with on-Site materials, the results of these tests are contained in Appendix B.

3. Groundwater at the Site has elevated concentrations of inorganic salts and metals such as chloride (9,500 mg/L), sulfate (2,500 mg/L) sodium (4,100 mg/L), and total dissolved solids (21,000 mg/L). A copy of the analytical report for the groundwater is included in Appendix C.

4. The Contractor is advised of the potential for subsurface obstructions or very dense soils at the Site, and that the Contractor's means and methods must include provisions for avoiding, penetrating or removing any obstructions that impact installation of the slurry wall.

1.4. REFERENCE STANDARDS

A. American Petroleum Institute (API) Specification for Oil-Well Drilling-Fluid Materials-API Spec 13A.

B. American Petroleum Institute (API) Recommended Practice Standard Procedure for Field Testing Water-Based Drilling Fluids, API RP-13B-1.

C. American Society for Testing and Materials (ASTM) - Test Method for Unit Weight of Concrete ASTM C 138.

D. American Society for Testing and Materials (ASTM) - Test Method for Slump of Concrete, ASTM C 143.

E. American Society for Testing and Materials (ASTM) - Particle-Size Analysis of Soils, ASTM D 422.

F. American Society for Testing and Materials (ASTM) - Materials Finer than No. 200 Sieve, ASTM D 1140.

G. American Society for Testing and Materials (ASTM) - Liquid Limit, Plastic Limit and Plasticity Index of Soils, ASTM D 4318.

H. American Society for Testing and Materials (ASTM) - Density of Bentonite Slurries, ASTM D 4380.

I. American Society for Testing and Materials (ASTM) - Sand Content by Volume of Bentonite Slurries, ASTM D 4381.

1.5. ABBREVIATIONS AND DEFINITIONS

A. API - American Petroleum Institute

B. ASTM - American Society for Testing and Materials

C. Slurry trench - A narrow, vertical-walled trench of specified width excavated by the slurry trench method and backfilled with specified materials to form a cutoff wall of low permeability. The terms “slurry trench” and “slurry wall” are used interchangeably in these specifications.

D. Slurry trench method - A method of excavating a narrow, vertical trench using a slurry mixture to support the trench walls and prevent movement of groundwater into or through the excavated trench.

E. Water-bentonite slurry - A stable colloidal suspension of powdered bentonite in water. The terms “slurry” and “bentonite slurry” are used interchangeably in these Specifications.

F. Soil-bentonite (SB) backfill - A homogeneous mixture of specified soil material, bentonite and water. The terms “soil-bentonite backfill” and “backfill” are used interchangeably in these Specifications.

G. Slurry trench specialist - An individual who has had proven and successful experience in slurry trench construction and is knowledgeable of: (1) the proper methods employed to mix slurry and backfill, (2) the use, testing and control of bentonite as a slurry, (3) construction equipment, (4) excavation and backfill operations, and (5) testing for slurry trench quality control.

H. Working Platform - The working platform is the surface of compacted fill and/or excavated surface from which the slurry wall is constructed.

1.6. SUBMITTALS

A. Qualifications of Contractor: The Contractor, his Subcontractor or his consulting advisor, shall submit evidence that he is experienced and competent to construct a soil-bentonite slurry trench. The slurry trench company shall have at least five years of prior experience in contracting slurry walls. This evidence will insure that the Contractor will have sufficient competent experienced personnel to carry out the operations specified.

B. In particular, a slurry trench specialist shall supervise the construction, slurry preparation, and quality control. The slurry trench specialist shall have at least five years of experience and/or five projects in successful construction of slurry walls.

C. The company name, key contact, and qualifications of the Contractor's off-Site laboratory shall be submitted. The laboratory will have previous experience with slurry wall materials, experienced laboratory technicians, and modern permeability testing equipment.

D. Work Plan: The Contractor shall submit a detailed operating plan describing his proposed construction equipment, procedures, and schedules. This shall include, but not be limited to, the Contractor's plan for:

1. Coordinating the construction, maintenance and removal of working platforms, mixing pads, and haul roads with the Owner, Contractor or other Contractors on Site.
2. Equipment set-up and Site use layout including storage areas, haul roads and working platform dimensions.
3. Equipment Specifications including: maximum depth capability of excavator; number and type of backfill mixing equipment; and Specifications of slurry mixing equipment.
4. Procedures for water-bentonite slurry mixing, transportation and re-circulation.
5. Procedures for trench excavation and backfilling.
6. Material properties, sources, and (manufacturer's) certificates of quality.
7. Control of drainage, spills, wastes, etc.
8. Clean-up, spoils disposal, slurry disposal.

E. Quality Control Plan: The Contractor shall submit a Quality Control Plan with details of the personnel, responsibilities, inspections, and organization for ensuring the quality of construction required by these specifications. The plan shall provide a table listing testing methods, frequencies, and minimum acceptable values. The plan shall explain the methods and locations for obtaining

samples for testing and reporting schedules. Copies of quality control forms shall be submitted for review and approval.

F. Bar chart schedule and sequence of operations: The Contractor shall submit a detailed schedule and sequence of operations in a bar chart format. The submittal shall include a description of the schedule including typical working hours and days; sequence of operations; and maintenance schedule.

G. Final report and as-built profile: The following information shall be submitted to the Engineer within three weeks of the completion of Work. Copies of all daily reports, laboratory test results, a record of sounds taken during construction including the depth of the trench, key, and backfill slope obtained each morning and evening by the slurry specialist. Soundings shall be taken at 10 foot intervals of the backfill and trench bottom. The soundings shall be used to generate an as-built profile of the trench, as constructed. Also included in the final report shall be records of:

1. Fresh bentonite slurry mix - A record of plant-mixed bentonite slurry quantities, proportions, properties, and admixtures made during construction. Adjustments to the slurry mixture shall be noted.

2. Trench bentonite slurry mix - A record of in-trench bentonite slurry properties made during construction. Procedures and admixtures used to modify slurry properties shall be noted.

3. SB backfill mix - A record of SB backfill material quantities, properties, and mix adjustments made during construction. Location of samples for laboratory testing shall be noted.

4. Quality Control Data - A record of quality control samples, tests, and all test results.

PART 2 MATERIALS

2.1. SLURRY

A. Slurry shall consist of a stable colloidal suspension of bentonite in water and shall be controlled in accordance with the most current API Recommended Practice 13B-1, and the following requirements.

1. At the time of introduction of the slurry into the trench, the slurry shall be a mixture of not less than 6% bentonite in water [by weight]. Additional bentonite or admixtures may be required depending on the hardness and temperature of the water and the quality of the bentonite. The slurry shall have a minimum apparent viscosity of 50 seconds reading through a Marsh Funnel Viscometer, a pH between 6 and 9 units, a minimum density of 64 pcf, (1.03 gm/cc) and a filtrate loss of less than 20 cubic centimeters in 30 minutes at 100 psi.

2. The slurry mixture in the trench shall have a unit weight not less than 64 pcf (1.03 gm/cc), not greater than 85 pcf (1.36/gm/cc) or 15 pcf less than the backfill unit weight, or as approved by the Engineer.

2.2. BENTONITE

A. Only bentonite products that have been tested under the specific Site conditions are approved for the Project. The approved list of bentonite products include:

1. FEDERAL GEL 90 – manufactured by Federal Industrial Products, Houston, Texas, Tel: (832) 295-2619.
2. CETCO's Seawater Resistant, Special Formula 1 – manufactured by CETCO, Inc. Contact: Justin Seago, Tel: (312) 215-4078.
3. CETCO's Seawater Resistant, Special Formula 2 – manufactured by CETCO, Inc. Contact: Justin Seago, Tel: (312) 215-4078.

2.3. WATER

A. Make up water used for construction of the slurry wall shall be obtained from an on-Site fire hydrant. The results of the water quality testing of the hydrant are summarized in the table below, and a copy of the analytical laboratory report is presented Appendix D.

Sample ID:	Fire Hydrant SE
Analyte	**Result (mg/L)**
Chloride	83
Sulfate	230
Clacium	24
Magnesium	4.3
Potassium	79
Sodium	70
Alkalinity as CaCO3	130
Bicarbonate Alkalinity as CaCO3	130
TDS	700
pH	8.28

2.4. ADDITIVES

A. Admixtures of the type used in the control of oil-field drilling muds such as softening agents, dispersants, retarder, or plugging or bridging agents may be added to the water or the slurry to permit efficient use of bentonite and proper workability of the slurry. The Engineer must approve, and advise, of all additives used.

2.5. BACKFILL

A. The material for trench backfilling shall be composed of fresh slurry, trench slurry and selected soils obtained from a designated borrow area and/or trench spoils. Trench slurry may be disallowed if additives are not acceptable to the Engineer. The soil shall be friable and free from roots, organic matter, refuse, or other

deleterious materials. The backfill shall be thoroughly mixed and reasonably well graded between the following gradation limits:

Screen Size	Percent Passing
(U.S. Standard)	By Dry Weight
3”	100%
No. 200	>30% to < 80%

B. The permeability of the backfill shall be less than 1 x 10^{-6} cm/sec.

C. The slump of the backfill shall be 5 to 6 inches, and the density of the backfill shall be at least 15 pcf greater than the density of the slurry.

D. Dry bentonite must be added to assist in reducing the permeability and slump to within the specified range of 5 to 6 inches.

E. Target mix design: based on laboratory mix design testing, a bentonite mass rate between 2.3 and 4% (by dry weight of soil) met the performance criteria for permeability. Contractor shall be required to mix the slurry wall backfill within this range.

F. Blending of imported clay: Contractor shall supply and blend imported clay to meet the required backfill gradation limits. The imported approved borrow source for the clay is:

1. Boulder Ranch Quarry, Boulder City, NV – CTC Crushing, Inc.
2. Gradation analyses for the borrow source is included in Appendix D.

PART 3 EXECUTION

3.1. SLURRY TRENCH CUTOFF

A. A slurry trench cutoff wall shall be constructed to the lines, grades, and cross sections indicated on the drawings. The trench shall have essentially vertical walls, a minimum width of 36 inches, and shall extend through the overburden and key to the designated stratum as indicated on the drawings.

B. A generalized description of the soil profile through, which the slurry trench cutoff is to be constructed, is provided on the geologic profiles on the drawings, and boring logs in Appendix A.

C. Contractor is to shore and protect or cut and cap interfering crossing utility lines, as indicated on the Drawings. Contractor is responsible to field verify the exact location and depths of said utilities at no additional cost to the Owner.

3.2. TOLERANCES

A. The slurry trench shall be essentially vertical. The working platform and/or excavating equipment may be leveled to be plumb with 1.5% of vertical.

B. The depth of the slurry trench shall be measured or surveyed to within 3 inches of the desired elevation.

C. The excavating tool shall be at least as wide as the design width of the slurry trench.

D. The slurry trench shall follow the designed alignment within 2 foot of the centerline. The slurry trench may vary from the designed alignment (e.g. at corners or turns), if approved by the Engineer.

E. Construction will not be permitted when the air temperature is below 20°F or when severe weather conditions may compromise the quality of the Work.

F. Overlaps and changes in direction of the slurry trench shall require an over excavation at least 5 feet beyond the centerline of the trench. In cases where the trench must be re-excavated (for example, due to an extended shutdown, cave-in, rework, etc.) the overlap into acceptable backfill shall be at least 10 ft.

3.3. TRENCH EXCAVATION

A. Excavation of the slurry trench cutoff wall shall be accomplished by use of any suitable earth-moving equipment, or combination thereof, such as a backhoe, clamshell, chisels, and ripper teeth so the trench can be carried to its final depth of cut continuously along the trench alignment. The excavator shall have the capability to excavate at least 5 feet deeper than the maximum depth shown on the Drawings Special chopping, chiseling or other suitable equipment may be used as necessary to satisfactorily accomplish the required excavation.

B. The width of the excavating tool shall be equal to or greater than the specified minimum width of the slurry trench. Additional equipment such as airlift pumps and slurry desanders shall be used, if required, to clean the trench bottom slurry in accordance with the requirements of the Specification at no additional cost to the Owner. The trench excavation equipment shall be capable of excavating the required key into the designated stratum.

3.4. SLURRY BATCHING PLANT

A. The slurry batching plant shall include the necessary equipment including a high shear mixer capable of producing a colloidal suspension of bentonite in water, pumps, valves, hoes, supply lines, and all other equipment as required to adequately supply slurry to the trench.

B. Storage tanks shall be provided as needed to store initially mixed slurry to allow hydration, and to retain a reserve in case substantial slurry loss through underlying previous zones occurs. Slurry held in storage shall be agitated or recirculated to maintain a homogeneous mix. All slurry for use in the trench shall be prepared using a suitable mixer.

C. No slurry is to be made in the trench.

D. Mixing of water and bentonite shall continue until bentonite particles are fully hydrated and the resulting slurry is homogeneous.

3.5. BACKFILL MIXING AND PLACING

A. Equipment for mixing and placing backfill may consist of any suitable earthmoving or grading equipment, such as bulldozers, or blade graders or backhoes, or blenders such as a pug mill, that are capable of thoroughly mixing the backfill materials into a homogeneous blend having the required gradation and properties and placing the material in the trench as specified. Soil clods shall be broken to 4 inch maximum size by the backfill preparation equipment and methods employed. Deleterious materials and debris, oversize particles, shall be removed from the backfill before approval for placement.

3.6. SLURRY TRENCHING

A. Excavation shall proceed continuously from the starting point to the finishing point. Slurry shall be introduced into the trench at the time trenching begins and shall be maintained in the trench during excavation and until backfilled. The Contractor shall maintain the stability of the excavated trench at all times for its full depth. The level of the bentonite slurry shall always be maintained and not permitted to drop more than 2 feet below the surface of the working platform. The Contractor shall have personnel, equipment, and prepared slurry ready to raise the slurry level at any time. To this end, the Contractor shall have personnel check the trench levels and on call to raise the slurry level weekends and/or holidays included.

B. Upon completion of excavation, loose material or cuttings shall be removed from the bottom of the trench with the excavation tools or other suitable means such as the excavator bucket or air lift pumps. If the unit weight of the slurry in the trench exceeds the specified limits, or becomes unworkable, the heavy slurry shall be removed from the trench by airlift pump, clamshell, or other methods approved by the Engineer or the excess solids shall be removed from the slurry by settling ponds, screening, or desanding. The trench bottom shall be cleaned of debris and excess sand or sediment when backfilling. The trench shall be sounded immediately before placing backfill, and soundings shall be compared to the trench excavation soundings to verify the bottom. At a minimum, soundings shall be taken each morning and each evening and compared to monitor for cave-ins or excessive settlement.

3.7. BACKFILL MIXING

A. The backfill shall be mixed beside the trench or in designated location on-Site. If the backfill is mixed beside the trench, the Contractor shall control and provide sufficient equipment and work platform space to support slurry spills, trench stability, and mixing equipment operation. Unmixed materials shall not be placed or be allowed to fall into the trench. If the backfill is mixed in a remote location, the Contractor shall build and maintain adequate haul roads to the mixing pit or

pad. The mixing pit or pad shall be lined with compatible soils or cement to prevent contamination from unsuitable materials. In either case, the Contractor shall be responsible for the quality of the backfill.

B. Borrow materials and dry bentonite shall be mixed and blended in mechanical blenders or by windrowing, disk harrowing, bulldozing, blading or by other approved methods. Mixing and blending shall be performed in such a manner as to produce the required gradation of backfill. The backfill material shall be thoroughly mixed into a homogeneous mass, free of large soil clods, lumps or pockets of fines, sand, or gravel. Occasional particles of up to 4 inches in their largest dimensions will be permitted. Just prior to placing, the backfill material shall have a slump of 5 to 6 inches. To this end, the materials shall be sluiced with slurry from the trench or fresh slurry during blending operations. Sluicing with water will not be permitted. Backfill shall be sampled and tested for permeability, density, slump, and gradation after preparation.

3.8. BACKFILL PLACEMENT

A. The backfill shall be placed continuously from the beginning of the trench, in the direction of the excavation, to the end of the trench. The toe of the slope of the trench excavation shall precede the toe of the backfill slope so that the toe of the backfill shall not be closer than 20 feet to the toe of the excavation slope, or as required to permit proper cleaning of the trench bottom as approved by the Engineer. Excavation shall not exceed 150 feet from the toe of the backfill.

B. Excavation must permit inspection and measurement immediately after completion and prior to backfilling. Placing operations shall proceed in such fashion that the surface of the backfill below the slurry shall follow a reasonably smooth grade and shall not have hollows, which may trap pockets of slurry during subsequent backfilling.

C. Free dropping of backfill material through the slurry is not acceptable. Initial backfill shall be placed by lowering it to the bottom with clamshell bucket or backhoe until the surface of the backfill rises above the surface of the slurry or by lead-in slope. Additional backfill may then be placed in such manner that the backfill enters the trench by sliding down the forward face of the previously placed backfill. To accomplish this, sufficient backfill shall be piled behind the crest of the existing backfill slope to cause a mud-wave action at the face of the backfill. The backfill shall not be dropped or deposited in any manner that will cause segregation.

D. An acceptable substitute for the initial placing of backfill by the use of a clamshell bucket may be a lead-in trench. The lead-in trench shall begin at a point outside of the limits of Work and provide sufficient distance for the backfill face to form, by placing the backfill into the trench, before the toe of the backfill reaches the point where the cut-off is required. The lead-in trench shall be 1V:1H or flatter.

3.9. TREATMENT OF TOP OF BACKFILL

A. The surface of the backfill shall not be allowed to desiccate prior to placing the final cap. A temporary covering may be used to protect the backfill prior to placing the final cap. Temporary crossing of extra thick compacted soil or trench plates shall be used for heavy equipment crossings. The temporary covering shall consist of at least 1 foot of un-compacted backfill placed within one day after the SB backfill is placed. After a minimum of one week, the temporary cover may be removed. Any depressions or settlement shall be repaired by placing additional backfill or the permanent cap.

B. Upon completion of backfill placement and before desiccation of the backfill surface can occur, the cutoff trench shall be covered in accordance with the final cap details shown on the drawings.

3.10. CLEAN UP

A. After completion of the backfill and capping, all remaining excavated material and slurry shall be removed and the surface shall be cleaned and leveled as indicated on the Drawings. Excess slurry shall be disposed by drying, mixing with dry materials and disposed off-Site. No slurry shall be left in ponds, and all ponds shall be pumped dry and backfilled in a controlled manner.

PART 4 QUALITY CONTROL

4.1. QUALITY CONTROL

A. The Contractor shall maintain his own quality control for the cutoff wall construction under the direction of a qualified geotechnical engineer. Minimum testing requirements are specified below.

Table 1: Soil - Bentonite Slurry Trench Quality Control Testing Plan

Property	Requirement	Min. Test Frequency	Test Method	Comment
Bentonite Powder				
a. YP/PV Ratio	> 3	1 per truck of RR car	API Spec 13A	Premium Grade.
b. Viscometer at 600 rpm	> 30	1 per truck of RR car	API Spec 13A	Certification by Manufacturer
c. Filtrate Loss	< 15 cc	1 per truck of RR car	API Spec 13A	
d. Moisture Content	< 10%	1 per truck of RR car	API Spec 13A	
e. Residue larger than 75 micrometers	< 4%	1 per truck of RR car	API Spec 13A	
f. Certification	No peptizing	1 per truck of RR car	Section 4	
Water for Slurry Mixing				
a. pH	6 to 9	1 per source	API RP 13B-1	May be modified for

b. Hardness	< 250 ppm	1 per source	Hach Test	potable source or if treated
c. Total Dissolved Solids	< 500 ppm	1 per source	Hach Test	w/additives
Initial Bentonite Slurry				
a. Viscosity	> 40-60 seconds	2 per shift	API RP 13B-1	
b. Density	> 64 pcf	2 per shift	ASTM D-4380	
c. Filtrate Loss	< 25 cc	2 per shift	API RP 13B-1	
d. Bentonite content	> 5%	Per project	Weight-Volume	Demonstrate
In-Trench Bentonite Slurry				
a. Unit Weight	64 to 85 pcf	2 per shift	ASTM D-4380	Also > 15 pcf less than SB
b. Viscosity	> 40 seconds	2 per shift	API RP 13B-1	
c. Sand Content	>15 percent	2 per shift	ASTM D4381	Field test
SB Backfill Material				
a. Slump Cone	5 to 6 inches	1 per shift	ASTM C-143	
b. Gradation	Per design mix	1 per 500 cy	ASTM D-1140	Laboratory or Field Test
c. Bentonite content	Per design mix	Daily	Weight-Volume	Demonstrate
d. Density	15 pcf > In-trench slurry	1 per shift	ASTM C-138 or D04380 mod	
e. Permeability	$< 1 \times 10^{-6}$ cm/sec	1 per 500 cy	ASTM D-5084	Laboratory test

4.2. TRENCH CONTINUITY

A. The Contractor shall be responsible for demonstrating to the satisfaction of the Engineer that the trench is continuous and installed to the minimum specified depth into the designated stratum. The Engineer will be available on-Site to verify these measurements. Trench continuity shall be assured by the action of movement of the trench excavation equipment such that the digging tools can be passed vertically from top to bottom of the trench as well as moved horizontally along the axis of the trench without encountering unexcavated material. Penetration of the bottom of the trench into the shall be demonstrated at 10 ft. centers by observation of the excavation spoils from the trench and by direct measurement of the top of the designated stratum and the final excavated trench depth to the satisfaction of the Engineer.

4.3. MATERIALS

A. Bentonite: certificate of compliance with the Specification shall be obtained from the manufacturer for each shipment of bentonite delivered to the Site.

B. Water: water for slurry mixing shall be tested once at the beginning of the Project.

C. Prepared backfill: soil-bentonite backfill shall be tested prior to placement in the trench by conducting tests to determine slump and gradation. Laboratory testing of the backfill for gradation and permeability shall be conducted once for every 500 cubic yard of backfill mixed. Permeability testing shall be performed to verify the prepared material meets Specification. Permeability determinations may follow placement.

D. Fresh slurry: a complete series of tests shall be conducted from the mixer or tank containing fresh slurry ready for introduction in the trench at least twice per shift or each time a batch is prepared.

E. Trench slurry: slurry in the trench shall be tested at least twice per shift. Samples shall be obtained from the mid-depth of the trench near the toe of backfill slope.

4.4. SOUNDINGS

A. Soundings shall be taken every 10 feet along the trench centerline using a weighted tape, cable or other device. Soundings shall be recorded to the nearest 0.5 foot. Soundings shall record the following:

1. Bottom of excavation: the elevation of the trench shall be determined subject to approval by the Engineer.

2. Bottom of excavation prior to backfilling: soundings shall be used to monitor for sidewall collapse and accumulation of sediments.

3. Profile of backfill slope: the SB backfill slope and trench bottom shall be sounded at the beginning and end of each shift and converted to an as-built Drawing. This Drawing shall be reviewed daily as an indication of trench collapse, excessive settlement or sloughing.

4.5. QUALITY CONTROL TESTING EQUIPMENT

A. The field laboratory shall be equipped with the following equipment, at a minimum:

1. Marsh funnel and cup – 2 sets

2. Mud balance – 2 sets

3. Sounding cable – 2 sets

4. pH tape – 1 set

5. Standard filter press w/ graduate cylinder – 1 set

6. Slump cone and rod – 1 set

7. Sand content kit – 1 set

8. Standard #200 sieve with hot plate (or microwave oven) and balance – 1 set

9. Modified filter press for on-Site permeability test – 1 set

B. A qualified off-Site laboratory shall be engaged to perform the tests listed below. Samples shall be delivered to the laboratory on an expedited schedule and test results shall be reported the same week as the samples are received.

1. Permeability of SB backfill by ASTM D5084
2. Grain size of SB backfill by ASTM D422

4.6. PERMEABILITY MEASUREMENTS

A. Flexible wall permeability tests shall be conducted on samples of the backfill to determine compliance with these specifications. Samples of the SB backfill shall be obtained from the mixing area and sent to the off-Site laboratory for testing. The test parameters shall be as follows:

1. Effective confining stress = 10 psi.
2. Hydraulic gradient = 30
3. Permeate = Site groundwater

4.7. DOCUMENTATION

A. Results of all tests performed shall be recorded on forms acceptable to the Engineer and signed by the slurry trench specialist. These forms will be available to the Engineer at all times for his inspection. Copies of all quality control documents will be submitted weekly to the Engineer for his verification.

B. An as-built profile Drawing of the trench bottom and backfill slope shall be continuously maintained by the Contractor. The profile shall indicate the extents of excavation and backfill at the end of each working day. The daily profile shall be drawn in an electronic (EXCEL) format or by hand, as directed by the Engineer.

END OF SECTION 02320

SECTION NUMBER 02324
TRENCHING AND BACKFILLING

PART 1 GENERAL

1.1. SECTION INCLUDES

A. Excavate trenches for utilities to locations as shown on the Drawings.

B. Placement of bedding and backfill to elevations shown.

1.2. REFERENCES

A. ASTM C136 - Standard Test Method for Sieve Analysis of Fine and Coarse Aggregates.

B. ASTM D1557 - Standard Test Methods for Laboratory Compaction Characteristics of Soil Using Modified Effort (56,000 ft-lbf/ft3 (2,700 kN-m/m3).

C. ASTM D6938 - Standard Test Method for In-Place Density and Water Content of Soil and Soil Aggregate by Nuclear Methods (Shallow Depth).

1.3. FIELD MEASUREMENTS

A. Engineer to verify the survey benchmark and intended elevations for the work are as shown on Drawings.

1.4. MEAUREMENT AND PAYMENT

A. Measurement and payment shall be in accordance with Section 01275.

PART 2 PRODUCTS

2.1. BEDDING AND BACKFILL MATERIALS

A. Pea Gravel: Clean and graded, washed river-run gravel, conforming to the specifications of ASTM C33, Coarse Aggregate Size No. 8.

B. Soil Backfill: Clean soil, maximum particle size of 3 inches in larges dimension. May be obtained on site or from an off-site source.

C. Unstable materials containing peat or other organics, or materials which contain large amounts of refuse, broken pavement, boulders, roots, stumps, or other debris, shall not be incorporated into the backfill, and shall be disposed of off site at no extra cost to the Owner.

PART 3 EXECUTION

3.1. EXAMINATION

A. Verify fill materials to be reused is acceptable.

B. Contractor to obtain prior written approval and certification of the borrower source from the Engineer.

3.2. PREPARATION

A. Identify required lines, levels, contours, and datum.

B. Maintain and protect existing utilities remaining, which pass through work area.

C. Protect plant life, lawns, and other features remaining as a portion of final landscaping.

D. Protect benchmarks, wells, utilities, and other existing structures from excavation equipment and vehicular traffic.

E. Protect above and below grade utilities which are to remain.

F. Cut out soft areas of subgrade incapable of in-situ compaction. Backfill with soil backfill material and compact to density equal to or greater than requirements for subsequent backfill material.

G. Contractor shall be allowed for a trench width at bottom of 36 inches (for all sizes of pipes) and four inches below the underside of the pipe barrel for soils. Contractor shall comply with all rules and regulations and precautions laid out by OSHA, and by utility agencies for a safe operation. Any additional excavation outside the limits, and installing bedding and backfill to replace excessive trench excavation shall not be paid for separately, and Contractor to include such costs in other pay items.

H. Contractor shall not be allowed more than 200 linear feet of open trench at one time. Under unusual circumstances, the Engineer may authorize more than 200 linear feet of trench to be open, provided that pedestrian and driveway crossings are maintained at intervals of not more than 200 feet and that not more than one street intersection is closed to traffic.

I. Where pea gravel bedding is used, bedding shall be entirely covered with geotextile to prevent migration of fines into gravel. Any seams or splices shall have a minimum two (2) foot overlap.

3.3. EXCAVATION

A. Excavate subsoil required for utilities trenches as provided on Drawings.

B. Cut trenches sufficiently wide to enable installation of utilities and allow inspection per trench detail on Drawings.

C. Provide trench boxes, shoring, or other support as necessary to support excavations based on site soil conditions.

D. Excavation shall not interfere with normal 45 degree bearing splay of foundations.

E. Hand trim excavation. Hand trim for bell and spigot pipe joints. Remove loose matter.

F. Remove lumped subsoil, boulders, and rock.

G. Correct unauthorized excavation at no cost to Owner.

H. Correct areas over-excavated by error.

3.4. BEDDING

A. Support pipe and conduit during placement and compaction of bedding fill.

3.5. BACKFILLING

A. Backfill trenches to contours and elevations with unfrozen material.

B. Pea gravel shall be used to backfill lower 9 feet of groundwater injection trenches (8 feet below pipe to approximately 6 inches above pipe).

C. Systematically backfill to allow maximum time for natural settlement. Do not backfill over porous, wet, frozen or spongy subgrade surfaces.

D. Granular Fill: Place and compact materials in continuous layers not exceeding 12" loose depth.

E. Maintain optimum moisture content of backfill materials to attain required compaction of 90% of maximum density, as determined by modified Proctor (ASTM D1557).

F. Stockpile surplus backfill materials as directed by the Engineer.

G. Employ a placement method that does not disturb or damage utility conduits in the trench.

3.6. TOLERANCES

A. The upper limits of backfill shall be top of subgrade under roadways (approaches, sidewalks, etc.). In other areas, upper limit shall be bottom of topsoil.

3.7. FIELD QUALITY ASSURANCE

A. Field inspection and testing will be performed by the Engineer.

B. Quality assurance of testing shall be performed to document the pea gravel used onsite. The following test shall be tone at a rate of 1 test per 500 cubic yards, with a minimum of 3 tests:

1. Particle size analyses ASTM C136.

C. If tests indicate work does not meet specified requirements, remove work, replace and retest at no cost to Owner, and as approved by the Engineer.

D. General fill shall be placed and compacted in accordance with Section 2200 3.4

END OF SECTION 02324

SECTION NUMBER 02415
GEOTEXTILE

PART 1 GENERAL

1.1. 1.1 SECTION INCLUDES

A. Geotextile for separation and filtering application in groundwater injection trenches.

1.2. 1.2 REFERENCES

A. ASTM D4491 - Standard Test Methods for Water Permeability of Geotextiles by Permittivity.

B. ASTM D4533 - Standard Test Method for Trapezoid Tearing Strength of Geotextiles.

C. ASTM D4632 - Standard Test Method for Break Load and Elongation of Geotextiles (Grab Method).

D. ASTM D4751 - Standard Test Method for Determining Apparent Opening Size of a Geotextile.

E. ASTM D5261 - Standard Test Method for Measuring Mass Per Unit Area of Geotextile.

F. ASTM D6241 - Standard Test Method for the Static Puncture Strength of Geotextiles and Geotextile-Related Products Using a 50-mm Probe.

1.3. SUBMITTALS

A. Pre-installation: Submit prior to geotextile deployment:

1. Origin (supplier's name and production plant) and identification (brand name and number) of resin.

2. Statement from geotextile manufacturer to verify that quality of resin used to manufacture geotextile meets manufacturer's resin specifications.

3. Statement indicating if reclaimed polymer added to resin during manufacturing process.

4. List of materials which comprise geotextile, expressed in the following categories as percent by weight: base polymer, carbon black, other additives.

5. Written certification that minimum average roll values given in manufacturer's specification guaranteed by geotextile manufacturer.

6. Quality control certificates, signed by geotextile manufacturer. Each quality control certificate shall include roll identification numbers, testing procedures, and results of quality control tests.

1.4. DELIVERY, STORAGE, AND HANDLING

A. Packing and Shipping:

1. Manufacturer shall identify rolls of geotextiles with following:

a. Manufacturer's name.

b. Product identification.

c. Roll number.

d. Roll dimensions.

B. Storage and Protection:

1. Contractor will provide on-site storage area for geotextile rolls from time of delivery until the material is installed.

2. Contractor shall protect geotextile from dirt, water, ultraviolet light exposure, and other sources of damage.

3. Preserve integrity and readability of geotextile roll labels.

4. Rolls which do not have proper identification at delivery will not be accepted and will not be allowed on site.

PART 2 PRODUCTS

2.1. MATERIALS

A. Geotextile shall be a minimum 4 oz/yd2 nonwoven geotextile made from needle-punched polypropylene fibers, and meeting the properties defined in Section 2.02.

2.2. SOURCE QUALITY CONTROL

A. Geotextile Properties:

Property	Test Method	Frequency	Minimum Value
Mass per Unit Area, oz/yd^2	ASTM D5261	90,000 ft^2	4
CBR Puncture Strength, lb	ASTM D6241	90,000 ft^2	230
Grab Tensile Strength, lb	ASTM D4632	90,000 ft^2	113
Trapezoidal Tear Strength, lb	ASTM D4533	90,000 ft^2	41
Permittivity, sec^{-1}	ASTM D4491	90,000 ft^2	0.02
Apparent Opening Size, U.S. Sieve (max)	ASTM D4751	90,000 ft^2	70

B. Geotextile shall be stock products.

C. Geotextile shall be comprised of polymeric yarns, or fibers, oriented into stable network which retains its structure during handling, placement, and design loads.

D. At geotextile manufacturer's discretion and expense, additional testing of individual rolls may be performed to more closely identify noncomplying rolls and to qualify individual rolls.

PART 3 EXECUTION

3.1. PREPARATION

A. Manufacturer Certification

1. Manufacturer shall provide the Engineer with documentation certifying materials supplied are in conformance with the Specifications listed above.

3.2. INSTALLATION

A. Preparation:

1. During placement of geotextiles, care shall be taken not to entrap in or beneath geotextiles stones, depressions, or moisture that could damage geotextile, cause clogging of drains or filters, or hamper subsequent seaming.

B. Geotextile Deployment:

1. Anchor geotextile securely along crest of trench and deploy geotextile down along sides of trench in a controlled manner to continually keep geotextile in tension.

2. Secure geotextile with sandbags, stakes, or equivalent until trench is backfilled with pea gravel to 12 inches above pipe.

3. Fold excess geotextile into trench above pea gravel prior to placement of soil backfill.

4. No excess tensile stresses should occur in geotextile during placement.

C. Seaming Procedures:

1. Overlap geotextile minimum of 24 inches at seams.

3.3. FIELD REPAIR PROCEDURES

A. Repairs will be performed under the supervision and approval of the Engineer.

END OF SECTION 02415

SECTION NUMBER 03060
CONCRETE ROAD CROSSING

PART 1 GENERAL

1.1. SUMMARY

A. The Work required under this section includes furnishing all labor, materials, equipment, and performing all operations required for the construction of concrete surfaces.

1.2. SUBMITTALS

A. Submit proposed concrete mix design, reinforcement, joint filler and joint sealant product information in accordance in with Specification Section 01 33 00 – Submittal Procedures.

1.3. REFERENCES

A. American Concrete Institute (ACI):

1. ACI 301 – Specifications for Structural Concrete.
2. ACI 318 – Building Code Requirements for Structural Concrete.

PART 2 MATERIALS

2.1. CONCRETE

A. Do not use calcium chloride or admixtures that contain calcium chloride.

B. Use set retarding admixtures during hot weather, or as directed by the Owner's Representative.

C. The Contractor may propose additional admixtures for usage on the Project. Any additional admixtures must be approved by the Owner's Representative prior to being incorporated into the Work.

D. Concrete Mixing:

1. Ready Mixed Concrete: Mix and deliver in accordance with ASTM C94 or ASTM C685.
2. Site Mixed Concrete: Mix in accordance with ACI 318.

2.2. REINFORCEMENT

A. Furnish reinforcement as shown on the Contract Drawings.

PART 3 EXECUTION

3.1. SUBGRADE PREPARATION

A. Proof-roll the subgrade areas with equipment having a minimum gross load of 25 tons in as acceptable by the Owner's Representative.

B. If the subgrade is not stable due to high moisture content, disc and aerate to a depth of at least 12 inches to within +/- 2 points of optimum moisture content at no additional cost to the Owner. Upon completion of discing and aerating, re-grade and re-compact the subgrade material to a minimum of 95% of the maximum laboratory dry density (ASTM D1557) and to within +/- 2 points of optimum moisture content.

C. If after reworking the subgrade to within +/- 2 points of optimum moisture content it is still unstable or determined unsuitable by the Owner's Representative, undercut soft,, unstable areas to an elevation of stable subgrade. Slope vertical surfaces of undercuts to a ratio of 1:1. Backfill with well-graded aggregate base course material with no more than 8% passing the no. 200 sieve and compact in 9" loose lifts to a minimum of 95% of the maximum laboratory dry density (ASTM D1557).

3.2. FORM SETTING

A. Set forms true to the lines and grades shown on the Owner's Representative accepted design and hold in place with stakes or braces.

B. Clean and oil forms and division plates before placing concrete against them.

3.3. FIELD QUALITY CONTROL

A. Retain an independent testing laboratory acceptable to the Owner's Representative to perform all sampling and testing required herein.

B. Provide free access to the Work and cooperate with the Owner's Representative and testing firm.

C. Strength Test Samples:

1. Sampling Procedures: ASTM C172.

2. Cylinder Molding and Curing Procedures: ASTM C31, cylinder specimens, field cured.

3. Sample concrete and make one set of four (4) cylinders each day that concrete is placed. Select samples randomly from batches delivered to Site.

D. Field Testing:

1. Slump Test Method: ASTM C143/C143M.

2. Air Content Test Method: ASTM C173 or ASTM C231.

3. Temperature Test Method: ASTM C1064.

4. Measure slump and temperature for each compressive strength concrete sample.

5. Measure air content in air entrained concrete for each compressive strength concrete sample.

E. Cylinder Compressive Strength Testing:

1. Test Method: ASTM C39.
2. Test Acceptance: In accordance with Clark County requirements.
3. Test one cylinder at 7 days.
4. Test two cylinders at 28 days.
5. Retain one cylinder for testing when requested by Owner's Representative.
6. Dispose remaining cylinders when testing is not required.

3.4. REINFORCEMENT

A. Place reinforcement at the depth shown in the design drawings and support as per ACI 301.

B. Interrupt reinforcement at expansion joints.

3.5. PLACING CONCRETE

A. If the temperature of the plastic concrete is above 90°F but less than 95°F utilize a set retarder in the mix.

B. Do not place concrete when the temperature of the plastic concrete is 96°F or higher without the permission of the Owner's Representative.

C. Do not place concrete when the ambient temperature is below 35°F or below 40°F and falling without permission from the Owner's Representative.

D. Subgrade is to be moist and free of debris before any concrete is placed.

E. Place freshly mixed concrete promptly on the prepared subgrade to the depth required to complete the sidewalk in one course.

F. Vibrate the concrete and/or tamp and strike off with a straightedge resting upon the side forms and drawn forward with a sawing motion.

G. Do not interrupt successive placement, do not allow cold joints to occur.

H. Float the concrete with a wooden float until the surface is true.

3.6. CONSTRUCTION JOINTS

A. Place construction joints as per Clark County requirements.

3.7. EXPANSION JOINT

A. Place expansion joints as per Clark County requirements.

3.8. CONCRETE FINISH

A. Create a textured finish obtained by the use of a burlap or cotton drag, brush or broom so that a uniform gritty texture is obtained.

3.9. CURING AND PROTECTION

A. Keep the surface temperature of the concrete at a temperature above 50°F for the first 72 hours after placement, and above 32°F an additional 72 hours.

B. Apply a fog or mist spray to the surface of the concrete at the direction of the Owner's Representative to prevent shrinkage cracking.

C. Do not allow vehicles on the new concrete for at least 7 days.

D. Do not allow pedestrians on the concrete for 72 hours.

3.10. PATCHING

A. Allow the Owner's Representative to inspect concrete surfaces upon removal of the forms.

B. Excessive honeycomb or embedded debris is not acceptable. Notify the Owner's Representative immediately if discovered.

C. Patch all imperfections in accordance with ACI 301.

3.11. DEFECTIVE CONCRETE

A. Concrete not conforming to the required lines, details, dimensions or specified requirements will be considered defective concrete.

B. Repair or replacement of defective concrete will be determined by the Owner's Representative.

C. Do not patch, fill, touch-up, repair, or replace exposed concrete except upon express direction of the Owner's Representative for each individual area.

END OF SECTION 32 13 13

SECTION NUMBER 15079L
HDPE PIPE

PART 1 GENERAL

1.1. SUBMITTALS

A. Product Data:

1. Manufacturing test specification data listing resin type, cell classification, stock density, melt flow, flexural modulus, tensile strength, and coloration.

2. Include test results with shipment of materials, with two additional copies of test results furnished to ENGINEER.

3. Pipe Dimensions:

a. Average outside diameter.

b. Average inside diameter.

c. Minimum and average wall thickness.

1.2. QUALITY ASSURANCE

A. Comply with appropriate codes and standards of following organizations for handling, heat fusion, and underground installation of low pressure polyethylene pipe:

B. American Gas Association (AGA).

C. Plastic Pipe Institute (PPI).

1.3. DELIVERY, STORAGE, AND HANDLING

A. Pipe Storage:

1. Store or stack pipe to prevent damage from marring, crushing or puncture. Limit maximum stacking height to 6 feet.

2. Store in accordance with manufacturer's recommendations.

B. Pipe Handling:

1. Protect pipe from excessive heat or harmful chemicals.

PART 2 PRODUCTS

2.1. MATERIALS

A. Manufacturers:

1. Phillips Driscopipe, Inc., Richardson, Texas.

2. Plexco, Amsted Industries, Franklin Park, Illinois.

3. Poly Pipe Industries, Gainesville, Texas.

4. Or approved pipe.

B. Physical Properties of Pipe Resin:

1. Density: ASTM D 1505, not less than 0.941 - 0.955 g/cc.
2. Melt Flow: ASTM D 1238 - Condition E, not greater than 0.15.
3. Flexural Modulus: ASTM D 790, 110,000 to less than 160,000 psi.
4. Tensile Strength at Yield: ASTM D 638, 3,000 to less than 3,500 psi.
5. Environmental Stress Crack Resistance (ESCR): ASTM D 1693 - Condition C, shall be in excess of 5,000 hrs with zero failures.
6. Hydrostatic Design Basis: ASTM D 2837, 1,600 psi at 23°C.

C. High performance, high molecular weight, high density polyethylene pipe (Type 3408 resin).

D. ASTM D 1248 (Type III, Class C, Category 5, P34).

E. ASTM D 3350, minimum cell classification value 345434C.

F. Marking (Intervals of 5 feet or less):

1. Manufacturer's name or trademark.
2. Nominal pipe size.
3. Type of plastic pipe (i.e., PE 3408).
4. Standard dimension ratio.
5. ASTM D 2513.
6. Extrusion date, period of manufacture or lot, or batch number.

G. Dimensions:

1. Conform to standard dimensions and tolerances of ASTM D 2513.

2.2. FITTINGS

A. Fittings from polyethylene compound having cell classification equal to or exceeding compound used in pipe to ensure compatibility of polyethylene resins.

B. Provide molded fittings rather than factory fabricated fittings in available diameters.

C. Be of same manufacture as pipe being provided. ENGINEER may allow substitution for approved material with use of flanged joint sections.

D. Flange Joints:

1. 150-lb. convoluted Epoxy coated carbon steel or stainless steel backup flanges as recommended by manufacturer.

2. Stainless steel nuts and bolts.

3. Flanges and bolt patterns consistent with ANSI B16.5, AWWA C207, ASTM A536, and as recommended by manufacturer.

E. Fitting dimensions shall conform to standard dimensions and tolerances, ASTM D 3261.

F. Markings, each fitting:

1. Manufacturer's name or trademark.

2. Nominal size.

3. Type of plastic pipe (i.e., PE 3408).

4. Standard dimension

5. ASTM D 2513.

6. Extrusion date, lot number or batch number.

2.3. SOURCE QUALITY CONTROL

A. If manufacturer's test data inadequate or unavailable, OWNER reserves right to reject or require additional tests to satisfy material requirements. Costs of these tests shall be paid for by CONTRACTOR.

PART 3 EXECUTION

3.1. INSTALLATION

A. Heat Fusion of Pipe:

1. Weld in accordance with manufacturer's recommendation for butt fusion methods. Provide qualified fusion operators.

2. Butt fusion equipment for joining procedures shall be capable of meeting conditions recommended by pipe manufacturer including, but not limited to, temperature requirements, alignment, and fusion pressures.

3. For cleaning pipe ends, solutions such as detergents and solvents, when required, shall be used in accordance with manufacturer's recommendations.

4. Do not bend pipe to greater degree than minimum radius recommended by manufacturer for type and grade.

5. Do not subject pipe to strains that will overstress or buckle piping or impose excessive stress on joints.

6. Branch saddle fusions shall be joined in accordance with manufacturer's recommendations and procedures. Branch saddle fusion equipment shall be of size to facilitate saddle fusion within trench.

7. Before butt fusing pipe, inspect each length for presence of dirt, sand, mud, shavings, and other debris or animals. Remove debris from pipe.

8. After fusion welding of the 6-inch and 18-inch-diameter pipe, remove the bead of HDPE created by the fusion welding process to create a smooth interior joint or bevel the inside edge of the welded pipes to eliminate the bead and maintain a smooth interior joint.

9. Cover at end of each working day open ends of fused pipe. Cap to prevent entry by animals or debris.

10. Use compatible fusion techniques when polyethylene of different melt indexes are fused together. Refer to manufacturer's specifications for compatible fusion.

B. Flange Jointing:

1. Use on flanged pipe connection sections.

2. Connect slip-on epoxy-coated carbon steel or stainless steel backup flanges with nuts and bolts. Convoluted ductile iron backup rings may be substituted for joining HDPE pipes per manufacturer's recommendations.

3. Butt fuse fabricated flange adapters to pipe.

4. Observe following precautions in connection of flange joints.

   a. Align flanges or flange/valve connections to provide tight seal. Use nitrile-butadiene (hycar) gaskets. Gaskets are required for flange/valve connections.

   b. Place U.S. Standard round washers as may be required on some flanges in accordance with manufacturer's recommendations. Bolts shall be lubricated in accordance with manufacturer's recommendations.

   c. Tighten flange bolts in sequence and accordance with manufacturer's recommendations. Do not over-torque bolts.

5. Pull bolt down by degrees to uniform torque in accordance with manufacturer's recommendations.

6. Protect below grade bolts with Tapecoat mastic and tape.

C. Pipe Placement:

1. Grade control equipment shall maintain design grades and slopes during installation of pipe.

2. Dewatering: Remove standing water in trench before pipe installation.

3. Unless otherwise specifically stated, install pipe in accordance with manufacturer's recommendations.

4. Maximum lengths of fused pipe to be handled as one section shall be placed according to manufacturer's recommendations as to pipe size, pipe SDR, and topography so as not to cause excessive gouging or surface abrasion; but not to exceed 400 feet.

5. Prevent migration of dirt and debris through perforations during placement. Remove dirt or debris from pipe before backfilling.

6. Notify ENGINEER prior to installing pipe into trench and allow time for ENGINEER'S inspection. Correct irregularities found during inspection.

7. Allow pipe sufficient time to adjust to trench temperature prior to testing, segment tie-ins or backfilling activity.

8. Place in trench by allowing minimum 12 inch/100 feet for thermal contraction and expansion.

D. Perforations:

1. Provide pipe perforations in accordance with DRAWINGS. Use standard jig or frame to produce even, uniform perforations.

2. Remove cuttings from pipe before installations.

E. Structure Penetrations:

1. Provide manufactured or fabricated fittings for wall penetrations which have been designed for use with cast-in-place, pre-cast, or modular mechanical seal.

3.2. FIELD QUALITY CONTROL

A. Pipe may be rejected for failure to conform to Specifications or following.

1. Fractures or cracks passing through pipe wall. Pipes within one shipment shall be rejected if defects exist in more than 5% of shipment or delivery.

2. Cracks sufficient to impair strength, durability or serviceability of pipe.

3. Defects indicating improper proportioning, mixing, and molding.

4. Damaged ends, where such damage prevents making satisfactory joint.

B. Acceptance of fittings, stubs or other specially fabricated pipe sections shall be based on visual inspection at job site and documentation of conformance to these Specifications.

C. Pipe Testing: All underground transfer pipes shall be pressure tested to 10 psi for one hour with a maximum pressure loss of 10%. Does not apply to perforated pipe.

END OF SECTION 15079L

GROUNDWATER REMEDIAL SYSTEM - SLURRY WALL PROJECT
TITANIUM METALS CORPORATION

181 NORTH WATER STREET
BLACK MOUNTAIN INDUSTRIAL CENTER
HENDERSON, NEVADA

GEI PROJECT NO.: 1323080

State Map

NOT TO SCALE

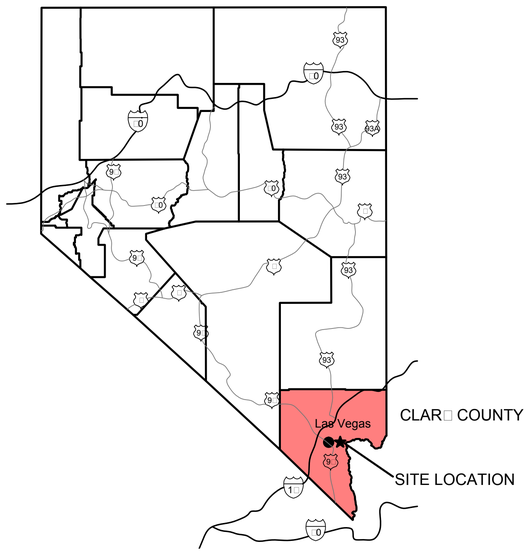

Site Vicinity Map

NOT TO SCALE

IMAGE SOURCE: CLARK COUNTY, NEVADA, AERIAL IMAGERY, SPRING 2013 - HTTP://GISGATE.CO.CLARK.NV.US/OPENWEB/

Drawing Index

TITANIUM METALS CORPORATION	
GROUNDWATER REMEDIAL SYSTEM - SLURRY WALL PROJECT	
SHEET	TITLE
C-0	DRAWING INDEX
C-1	GENERAL NOTES, ABBREVIATIONS, AND LEGEND
C-2	EXISTING CONDITIONS PLAN
C-3	SITE PREPARATION PLAN
C-4	SLURRY WALL WORKING PLATFORM, ALIGNMENT, INFILTRATION TRENCHES
C-5	SLURRY WALL WORKING PLATFORM PLAN AND PROFILE (1 OF 2)
C-6	SLURRY WALL WORKING PLATFORM PLAN AND PROFILE (2 OF 2)
C-7	SLURRY WALL PLAN AND GEOLOGIC PROFILE (1 OF 2)
C-8	SLURRY WALL PLAN AND GEOLOGIC PROFILE (2 OF 2)
C-9	INFILTRATION TRENCH PROFILES (1 OF 2)
C-10	INFILTRATION TRENCH PROFILES (2 OF 2) AND TRENCH DETAILS
C-11	FINAL GRADING PLAN
C-12	FINAL GRADE CROSS SECTIONS (1 OF 2)
C-13	FINAL GRADE CROSS SECTIONS (2 OF 2)
C-14	SLURRY WALL ROAD CROSSING DETAILS
C-15	STORM STRUCTURE DETAILS (1 OF 2)
C-16	STORM STRUCTURE DETAILS (2 OF 2)

1

PREPARED FOR:

TITANIUM METALS CORPORATION

PREPARED BY:

GEI Consultants
1□20 I Street
N.W. Suite □00
Washington, DC 2000□
202-□2□-9□10
WWW.GEICONSULTANTS.COM

APPROVED BY

NV ENERGY
N□A
NV ENERGY DATE

CENTURYLIN□
N□A
CENTURYLIN□ DATE

SOUTHWEST GAS
N□A
SOUTHWEST GAS CORPORATION DATE

CO□ COMMUNICATIONS
N□A
CO□ COMMUNICATIONS LAS VEGAS, INC. DATE

CLAR□ COUNTY WATER RECLAMATION DISTRICT

CLAR□ COUNTY WATER RECLAMATION DISTRICT □CCWRD□
HTE NUMBER IS □N□A□□□□□□□□

SIGNATURE ON THESE PLANS SHALL NOT BE CONSTRUED TO BE A PERMIT FOR AN APPROVAL OF ANY VIOLATION OF CLAR□ COUNTY WATER RECLAMATION DISTRICT RULES, REGULATIONS, OR DESIGN AND CONSTRUCTION STANDARDS. THE APPROVAL OF THESE DRAWINGS DOES NOT GUARANTEE CAPACITY IN THE DISTRICT□S COLLECTION OR TREATMENT SYSTEM.

N□A
CLAR□ COUNTY RECLAMATION DISTRICT DATE

CLAR□ COUNTY FIRE DEPARTMENT

CLAR□ COUNTY FIRE DEPARTMENT DATE

CLAR□ COUNTY DEPARTMENT OF PUBLIC WOR□S - DEVELOPMENT REVIEW

ACCEPTANCE OF PLANS FOR FILING:

BY: DATE

ACCEPTANCE OF THESE PLANS FOR FILING SHALL NOT BE CONSTRUED TO BE A PERMIT FOR, OR AN APPROVAL OF, ANY VIOLATION OF ANY OF THE PROVISIONS OF THE STATE OR COUNTY LAWS AND□OR SPECIFICATIONS. CLAR□ COUNTY SHALL BE HELD FREE FROM DAMAGES WHICH MAY RESULT FROM THE CONSTRUCTION OF THE IMPROVEMENTS FROM THE ENGINEERING DESIGN DEPICTED HEREIN.
NOTE: POWER POLES AND□OR OTHER E□ISTING FACILITIES NOT IN PROPER LOCATION, BASED ON PROPOSED IMPROVEMENTS SHOWN HEREON WILL BE RELOCATED AT NO E□PENSE TO CLAR□ COUNTY.

NO.	DATE	ISSUE□REVISION	APP
0	11□0□13	FOR BIDDING	GOA
-	0□1□13	NOT FOR CONSTRUCTION	GOA

DWG. NO. C0

SHEET NO. 1 of 1□

1

□\2013\13230□0 - TIMET\CAD\Drawings\Slurry Wall Bid Package Drawings\Addendum 1\C0□Title□Rev 1

BASIS OF BEARING

THE BASIS OF BEARINGS FOR THIS PROJECT IS GRID NORTH AS DEFINED BY THE NEVADA COORDINATE SYSTEM OF 19□3 □NCS□3□, EAST □ONE, □2□01□

BENCHMAR□

CITY OF HENDERSON BENCHMAR□ NO. □2 □REVISION DATE 200□□-
BOLT AND WASHER IN THE TOP OF CURB AT THE NORTHWEST CORNER OF LA□E MEAD DRIVE AND ATLANTIC AVENUE.
ELEVATION □1□□□9□FT □NAVD□□□
□ □□□□□9 M □NAVD□□□

FLOOD □ONE NOTE

THE SITE IS LOCATED WITHIN A FLOOD □ONE □ □UNSHADED□AND FLOOD □ONE A, PER FEMA FLOOD INSURANCE RATE MAP □FIRM□PANEL 32003C2□1□F, DATED NOVEMBER 1□, 2011. FLOOD □ONE □ □UNSHADED□IS DESCRIBED AS AREAS DETERMINED TO BE OUTSIDE THE 0.2□ ANNUAL CHANCE FLOODPLAIN. FLOOD □ONE A IS DESCRIBED AS AREAS DETERMINED TO BE WITHIN THE 1□ ANNUAL CHANCE FLOODPLAIN WITH NO BASE FLOOD ELEVATIONS DETERMINED.

CLAR□ COUNTY DEPARTMENT OF PUBLIC WOR□S-DEVELOPMENT REVIEW DIVISION CONSTRUCTION NOTES

1. INSPECTIONS ARE RE□UIRED. CALL 2□ HOURS IN ADVANCE TO SCHEDULE AT □02□□□□-□□10. PERMIT, APPROVED PLANS, AND BARRICADE PLANS FOR THIS WOR□ MUST BE ON THE JOB SITE AT ALL TIMES.
2. E□ACT LOCATION OF ALL SAW-CUT LINES SHALL BE DETERMINED IN THE FIELD BY A CLAR□ COUNTY INSPECTOR.
3. CURB AND GUTTER WITH A GRADE OF LESS THAN □10 OF ONE PERCENT SHALL BE CONSTRUCTED BY FORMING. EACH JOINT SHALL BE CHEC□ED FOR GRADE PRIOR TO CONSTRUCTION AND WATER TESTED AS SOON AS POSSIBLE AFTER CONSTRUCTION.
4. FINAL ASPHALTIC CONCRETE (AC) PAVEMENT SURFACES SHALL BE ON-HALF (1/2") INCH ABOVE THE LIP OF THE GUTTER □INCLUDING OPEN GRADE□.
5. ALL OFF-SITE IMPROVEMENT CONSTRUCTION SHALL CONFORM TO THE UNIFORM STANDARD SPECIFICATIONS AND STANDARD DRAWINGS CLAR□ COUNTY AREA NEVADA AND CLAR□ COUNTY SUPPLEMENT TO UNIFORM STANDARD DRAWINGS AND SPECIFICATIONS, LATEST REVISION.
6. PRIVATE STREETS, CURBS, GUTTERS, AND VALLEY GUTTERS REFLECTED ON THESE PLANS ARE TO BE INSPECTED BY A CLAR□ COUNTY INSPECTOR.
7. WHEEL CHAIR RAMPS SHALL BE CONSTRUCTED IN EACH □UADRANT OF AN INTERCEPTION PER STANDARD DRAWING 23□. E□ACT LOCATION OF RAMPS SHALL BE DETERMINED IN THE FIELD BY CLAR□ COUNTY PUBLIC WOR□S INSPECTOR.
8. PROPER SIGNS, BARRIERS, BARRICADES AND LIGHTS SHALL BE PLACED AND MAINTAINED IN ACCORDANCE WITH THE LATEST MANUAL OF UNIFORM TRAFFIC CONTROL DEVICES FOR STREETS AND HIGHWAYS. TRAFFIC, SCHOOL, OR STREET SIGNS OF ANY □IND ARE NOT TO BE MOVED FOR ANY REASON WITHOUT FIRST COORDINATING WITH THE DEPARTMENT OF PUBLIC WOR□S INSPECTIONS AT □02□□□□-□□10.
9. THIS PLAN DOES NOT AUTHORI□E CLOSURE OF ANY ROAD OR STREET.
10. NO OPEN TRENCH SHALL BE ALLOWED ACROSS ANY STREET OR WITHIN TEN □10□FEET OF ANY TRAVEL-WAY. E□CEPT WHEN WOR□ IS IN ACTUAL PROGRESS. AREAS COVERED BY ACCEPTABLE STEEL PLATE ARE NOT TO BE CONSTRUED AS A TRENCH. NO OPEN TRENCH IS PERMITTED IN E□CESS OF □00 FEET OR LENGTH NECESSARY TO ACCOMMODATE PIPE INSTALLATION IN A SINGLE DAY, WHICHEVER IS GREATER. ALL TRENCH CROSSINGS AND BAC□FILL SHALL MEET THE STANDARD SPECIFICATION UNLESS OTHERWISE STATED.
11. A TEMPORARY PATCH IS TO BE IN PLACE AT THE END OF EACH WOR□DAY WHERE THE BAC□FILL IN THE TRENCH HAS BEEN COMPLETED AND PRIOR TO OPENING THE WOR□ AREA BAC□TO TRAFFIC AND IS TO BE MAINTAINED BY THE PERMITTEE. A PERMANENT PATCH IS TO BE IN PLACE WITHIN THIRTY □30□DAYS AFTER THE INSTALLATION OF THE TEMPORARY PATCH.
12. COMPACTION TESTS ARE RE□UIRED.

STORMWATER RUNOFF MANAGEMENT

□RE□UIRED FOR ALL SITES GREATER THAN 1 ACRE □3,□□0 S□.FT.□□

1. THE OWNER, SITE DEVELOPER, CONTRACTOR, AND□OR THEIR AUTHORI□ED AGENTS SHALL EACH DAY REMOVE ALL SEDIMENT, MUD, CONSTRUCTION DEBRIS, OR OTHER POTENTIAL POLLUTANTS THAT MAY HAVE BEEN DISCHARGED TO, OR ACCUMULATED IN, THE PUBLIC RIGHTS OF WAY OF CLAR□ COUNTY AS A RESULT OF CONSTRUCTION ACTIVITIES ASSOCIATED WITH THIS SITE DEVELOPMENT OR CONSTRUCTION PROJECT. SUCH MATERIALS SHALL BE PREVENTED FROM ENTERING THE STORM SEWER SYSTEM.
2. ADDITIONAL CONSTRUCTION SITE DISCHARGE BEST MANAGEMENT PRACTICES MAY BE RE□UIRED OF THE OWNER AND HIS OR HER AGENTS DUE TO UNFORESEEN EROSION PROBLEMS OR IF THE SUBMITTED PLAN DOES NOT MEET THE PERFORMANCE STANDARDS SPECIFIED IN THE CLAR□ COUNTY TITLE 2□□□0 AND THE LAS VEGAS VALLEY CONSTRUCTION SITE BMP GUIDANCE MANUAL.
3. TEMPORARY OR PERMANENT STABILI□ATION PRACTICES WILL BE INSTALLED ON DISTURBED AREAS AS SOON AS PRACTICABLE AND NO LATER THAN 1□ DAYS AFTER THE CONSTRUCTION ACTIVITY IN THAT PORTION OF THE SITE HAS TEMPORARILY OR PERMANENTLY CEASED. SOME E□CEPTIONS MAY APPLY□REFER TO THE NEVADA STORMWATER GENERAL PERMIT FOR CONSTRUCTION ACTIVITY NVR100000, SECTION III.A.□□
4. AT A MINIMUM, THE CONTRACTOR OR HIS AGENT SHALL INSPECT ALL DISTURBED AREAS, AREAS USED FOR STORAGE OF MATERIALS AND E□UIPMENT THAT ARE E□POSED TO PRECIPITATION, VEHICLE ENTRANCE AND E□IT LOCATIONS, AND ALL BMPS WEE□LY, AND WITHIN 2□HOURS AFTER ANY RAIN EVENT OF 0□□ INCHES OR MORE. THE CONTRACTOR OR HIS AGENT SHALL UPDATE OR MODIFY THE STORMWATER POLLUTION PREVENTION PLAN AS NECESSARY. SOME E□CEPTIONS TO WEE□LY INSPECTIONS MAY APPLY, SUCH AS SUSPENSION OF LAND DISTURBANCE ACTIVITIES. REFER TO THE NEVADA STORMWATER GENERAL PERMIT FOR CONSTRUCTION ACTIVITY NVR100000, SECTION III.A.12.
5. ACCUMULATED SEDIMENT IN BMPS SHALL BE REMOVED WITHIN SEVEN DAYS AFTER A STORMWATER RUNOFF EVENT OR PRIOR TO THE NE□T ANTICIPATED STORM EVENT, WHICHEVER IS EARLIER. SEDIMENT MUST BE REMOVED WHEN BMP DESIGN CAPACITY HAS BEEN REDUCED BY □0 PERCENT OR MORE

ASSESSOR PARCEL NUMBERS□MAPS

PARCEL NUMBER	PARCEL MAP NUMBERS
1□□-12-□01-003	1□□.12.□
1□□-12-□01-002	1□□.12.□
1□□-12-□01-002	1□□.12.□
1□9-0□-301-002	1□9.0□.□3

SURVEY INFORMATION

THE AREA EAST OF HP-□POND WAS SURVEYED BY AT□INS GLOBAL ON OCTOBER 1□, 2013.

THE AREA NORTH OF SW-1 AND HP-□WAS SURVEYED BY ENVIROCON, INC. ON OCTOBER 1□, 2013.

GENERAL NOTES

1. □BASE MAP FROM AERIAL PHOTOGRAPHY BY □ENNEY AERIAL MAPPING, INC. ON NOVEMBER 1, 200□.
2. □GRID COORDINATE SYSTEM IS NEVADA STATE COORDINATE SYSTEM, EAST □ONE, NAD□3 DATUM.
3. □GROUND SURFACE CONTOUR INTERVAL □1-FOOT AND IS REFERENCED TO MEAN SEA LEVEL.
4. □ALL UTILITY LOCATIONS ARE APPRO□IMATE, AND THE CONTRACTOR MUST FIELD VERIFIED.PRIOR TO CONSTRUCTION.

LEGEND

- 1□□0 — GROUND SURFACE CONTOUR ELAVATION □MAJOR□
- GROUND SURFACE CONTOUR ELAVATION □MINOR□
- SURFACE WATER
- PAVED ROAD
- GRAVEL ROAD
- FENCE
- LIMIT OF 100 YEAR FLOOD □ONE
- PROPERTY LINE
- OHE — OVERHEAD POWERLINE
- TREE LINE
- 80102 — SURVEY CONTROL POINT
- SOIL BORING
- MONITORING WELL
- E□TRACTION WELL
- MH — MAN HOLE
- EWQal-01 - EWQal-05 — E□TRACTION WELLS TO BE INSTALLED PRIOR TO SLURRY WALL CONSTRUCTION
- □□□□-□□ — WELLS TO BE REMOVED BY OTHERS PRIOR TO SLURRY WALL CONSTRUCTION
- XXXX-## — WELLS TO BE PROTECTED

LIST OF ABBREVIATIONS

MH	MANHOLE
OHE	OVERHEAD ELECTRICAL LINE
CP	CONTROL POINT
N.T.S.	NOT TO SCALE
CU. S□. FT.	CUBIC S□UARE FEET

Attention:
0 — 1"
If this scale bar does not measure 1" then drawing is not original scale.

NO.	DATE	ISSUE□REVISION	APP
1	11□20□13	CHANGED NUMBER OF SHEETS	GOA
0	11□0□13	FOR BIDDING	GOA
-	0□1□13	NOT FOR CONSTRUCTION	GOA

Designed: G. Onorato
Checked: G. Onorato
Drawn: T. Morton
Submittal Date: 11□0□2013

GEI Consultants
1□20□I Street
N.W. Suite □00
Washington, DC 2000□
202□ 2□9□10

TITANIUM METALS CORPORATION
1□1 NORTH WATER STREET
BLAC□ MOUNTAIN
INDUSTRIAL CENTER
HENDERSON, NEVADA □901□
GEI Project 13230□0

SLURRY WALL PROJECT

GENERAL NOTES, ABBREVIATIONS, AND LEGEND

DWG. NO. C1
SHEET NO. 2 of 1□

1

X:\2013\13230□0 - TIMET\CAD\DRAWINGS\SLURRY WALL BID PACKAGE DRAWINGS\ADDENDUM 1\C1.GENERAL NOTES.ABBREVIATIONS.LEGEND.REV 1.DWG

□:\2013\13230□0 - TIMET\CAD\Drawings\Slurry Wall Bid Package Drawings\Addendum 1\C1□General Notes□Abbreviations□Legend□Rev 1

Attention:	NO.	DATE	ISSUE/REVISION	APP
0 1" If this scale bar does not measure 1" then drawing is not original scale.	3	12/1 /13	REVISED WELL LOCATIONS/E IST GRADE	GOA
	2	11/20/13	CHANGED NUMBER OF SHEETS	GOA
	1	11/12/13	RELOCATED OVERHEAD POWER LINE	GOA
	-	11/0 /13	FOR BIDDING	GOA
	0	0 /1 /13	NOT FOR CONSTRUCTION	GOA

Designed: G. Onorato
Checked: G. Onorato
Drawn: T. Morton
Submittal Date: 11/0 /2013

GEI Consultants
1 20 I Street
N.W. Suite 00
Washington, DC 2000
202 2 9 10

TITANIUM METALS CORPORATION
1 1 NORTH WATER STREET
BLAC MOUNTAIN
INDUSTRIAL CENTER
HENDERSON, NEVADA 901
GEI Project 13230 0

SLURRY WALL PROJECT

E ISTING CONDITIONS PLAN

DWG. NO. C2

SHEET NO. 3 of 1

X:\2013\13230 - TIMET\CAD\DRAWINGS\SLURRY WALL BID PACKAGE DRAWINGS\ADDENDUM 1\C2_EXISTING CONDITIONS PLAN.RB2013\03

2013\13230 0 - TIMET\CAD\Drawings\Slurry Wall Bid Package Drawings\Addendum 1\C2 Existing Conditions Plan Rev 3

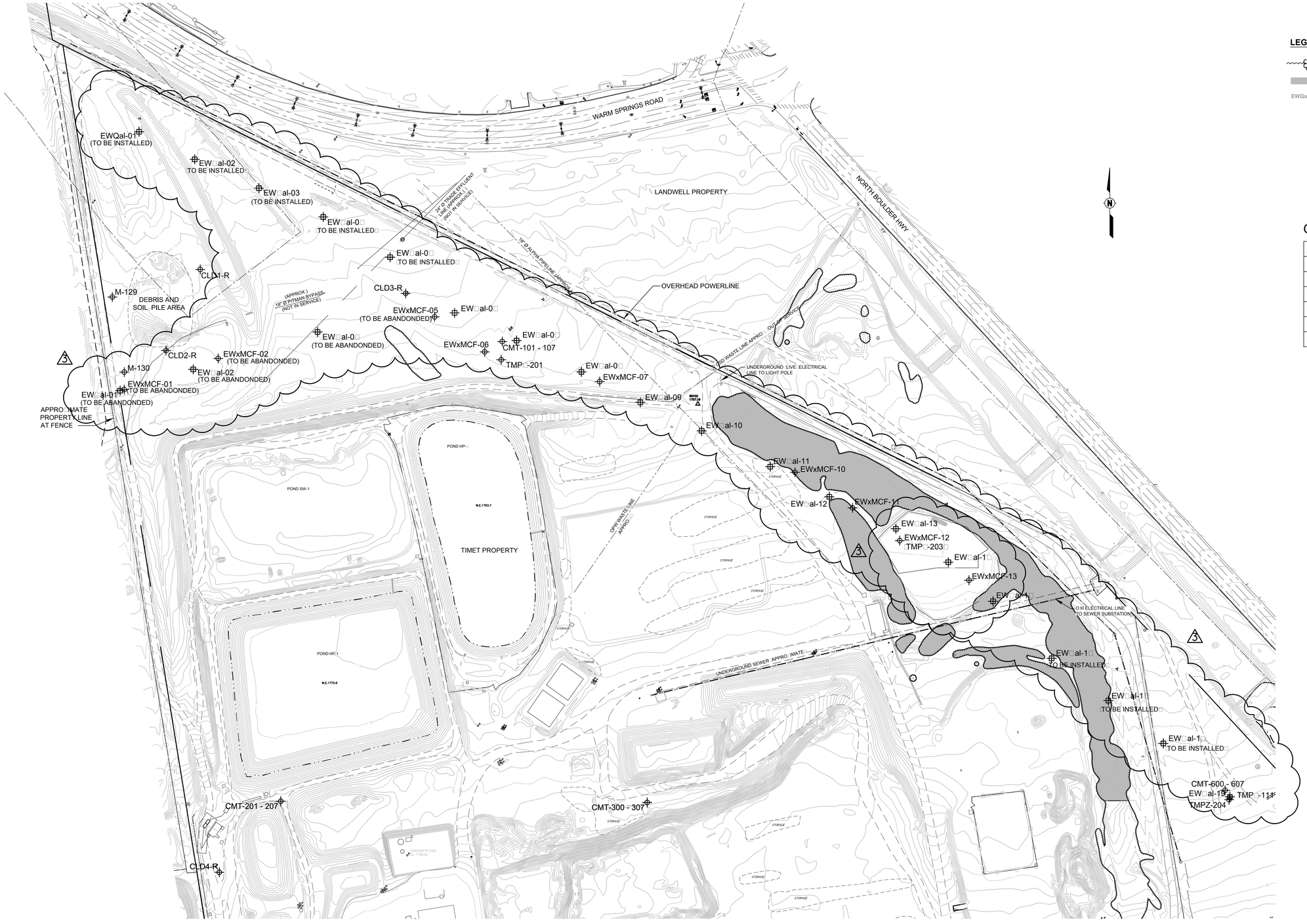

LEGEND

EWQal-01 - EWQal-05

XXXX-##

GRUBBING AREAS

Area #	Area, ft^2
GA 1	91,□0□
2	1□,29□
3	3,109
□	9□1
□	□,□□□
Total	121,□9 □2.□ Acres□

0 100 200
SCALE, FEET

Attention:	NO.	DATE	ISSUE/REVISION	APP
0 1" If this scale bar does not measure 1" then drawing is not original scale.	3	12/1□/13	REVISED WELL LOCATIONS/E□IST GRADE	GOA
	2	11/20/13	CHANGED NUMBER OF SHEETS	GOA
	1	11/12/13	RELOCATED OVERHEAD POWER LINE	GOA
	-	11/0□/13	FOR BIDDING	GOA
	0	0□/1□/13	NOT FOR CONSTRUCTION	GOA

Designed: G. Onorato
Checked: G. Onorato
Drawn: T. Morton
Submittal Date: 11/0□/2013

GEI Consultants
1□20 I Street
N.W. Suite □00
Washington, DC 2000□
202-□2□9□10

TITANIUM METALS CORPORATION
1□1 NORTH WATER STREET
BLAC□ MOUNTAIN
INDUSTRIAL CENTER
HENDERSON, NEVADA □901□

GEI Project 13230□0

SLURRY WALL PROJECT

SITE PREPARATION PLAN

DWG. NO. C3

SHEET NO. □of 1□

X:\2013\13230□0 - TIMET\CAD\DRAWINGS\SLURRY WALL BID PACKAGE DRAWINGS\ADDENDUM 1\C3.SITE PREP PLAN.REV 3.DWG 12/17/13

□\2013\13230□0 - TIMET\CAD\Drawings\Slurry Wall Bid Package Drawings\Addendum 1\C3 Site Prep Plan Rev 3

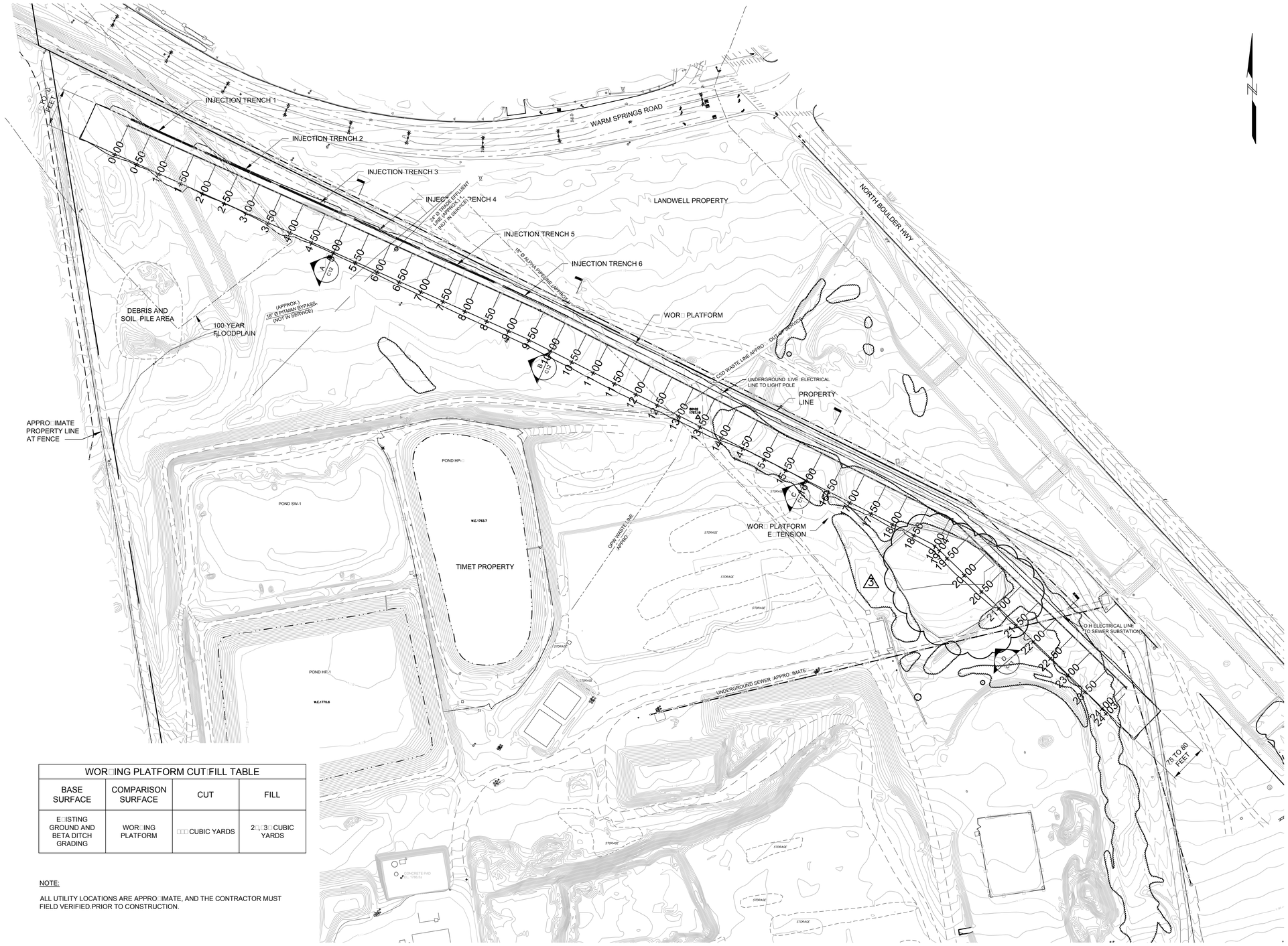

ALIGNMENT STATION CONTROL POINTS				
STATION	NORTHING	EASTING	WORKING PLATFORM ELEVATION	BOTTOM OF SLURRY WALL EXCAVATION
-0+00.00	2,020,192.63	2,192,919.09	1,363.00	0
-0+00.00	2,020,190.41	2,192,919.00	1,363.02	0
0+00.00	2,020,190.00	2,192,910.00	1,363.00	1,390.00
0+00.00	2,020,139.00	2,192,910.00	1,360.39.2	1,390.00
1+00.00	2,020,119.00	2,192,910.20	1,360.10	1,390.00
1+00.00	2,022039.03	2,29001.02	1,360.9	1,390.00
2+00.00	2,022,030.00	2,290,000.00	1,361.12	1,390.00
2+00.00	2,022,030.00	2,29093.00	1,362.00	1,390.00
3+00.00	2,022033.13	2,2913.00	1,363.00	1,390.00
3+00.00	2,022031.00	2,291,030	1,360.0	1,390.00
00.00	2,022029.20	2,29229.91	1,362.2	1,390.00
00.00	2,022,023.3	2,292,003	1,362.12	1,390.00
00.00	2,022,022	2,29321.10	1,369	1,390.00
00.00	2,022023.9	2,293,000	1,360.0	1,390.00
00.00	2,022021.33	2,29,12.39	1,360.0	1,390.00
00.00	2,020193.00	2,29,001	1,369	1,390.00
00.00	2,020,1 3.39	2,29,03.3	1,360.2	1,390.00
00.00	2,020,12.93	2,29,9.2	1,361.29	1,390.00
00.00	2,020132.00	2,29,9.0	1,362.10	1,390.00
00.00	2,020111.99	2,29,0.00	1,363.01	1,390.00
9+00.00	2,020091.2	2,29,000.10	1,363.00	1,390.00
9+00.00	2,020,0.9	2,29,31.00	1,360.1	1,390.00
10+00.00	2,020,009	2,29,001	1,360.0	1,390.00
10+00.00	2,022002.9	2,29,20.00	1,360.21	1,390.00
11+00.00	2,020002.00	2,29,003	1,360.9	1,390.00
11+00.00	2,199,0.20	2,29909.90	1,360.1	1,390.00
12+00.00	2,199,000	2,299,000	1,360.0	1,390.00
12+00.00	2,1993.00	2,29999.10	1,369.21	1,390.00
13+00.00	2,019912.00	3003.00	1,369.9	1,390.2
13+00.00	2,019,9.00	3003.00	1,360.1	1,391.3
1+00.00	2,019,002.0	30132.90	1,361.00	1,392.33
1+00.00	2,019,000.00	3010.00	1,362.21	1,393.09
1+00.00	2,019,22.00	30222.10	1,362.9	1,393.00
1+00.00	2,019,99.00	3020.00	1,363.1	1,393.90
1+00.00	2,019,000.00	30311.30	1,360.00	1,39.00
1+00.00	2,019,002.0	3030.9	1,360.21	1,39.22
1+00.00	2,019,31.00	3000.00	1,360.9	1,39.00
1+00.00	2,019,09.00	30.00.13	1,360.1	1,39.00
1+00.00	2,019,000.3	30.9.3	1,360.00	1,39.00
1+00.00	2,019,3.3	30.3.33	1,360.21	1,399.33
19+00.00	2,019,1.23	30.00.93	1,360.9	1,400.11
19+00.00	2,019,0.00	30.1.9	1,39.2	1,401.10
20+00.00	2,019,2.90	30.1.1	1,360.00	1,402.20
20+00.00	2,019,3.20	30.00.00	1,361.20	1,403.30
21+00.00	2,019,03.3	30,23.00	1,361.99	1,40.2
21+00.00	2,019,000.00	30,9.9	1,362.00	1,40.9
22+00.00	2,019,33.00	30,9.1	1,363.1	1,40.00
22+00.00	2,019399.09	30,31.33	1,362.0	1,40.00
23+00.00	2,0193.32	30.02.0	1,363.03	1,40.3
23+00.00	2,019329.00	30903.10	1,369	1,409.00
2+00.00	2,0192.00	30939.11	1,360.00	1,410.00
2+00.00	2,0192.9.99	3090.03	1,360.31	0.00
2+09.00	2,0192.2.0	3100.01	1,360.00	0.00
2+00.00	2,019190.3	310.00	0.00	0.00

WORKING PLATFORM CUT/FILL TABLE			
BASE SURFACE	COMPARISON SURFACE	CUT	FILL
EXISTING GROUND AND BETA DITCH GRADING	WORKING PLATFORM	000 CUBIC YARDS	2,03 CUBIC YARDS

NOTE:

ALL UTILITY LOCATIONS ARE APPROXIMATE, AND THE CONTRACTOR MUST FIELD VERIFIED.PRIOR TO CONSTRUCTION.

0 100 200
SCALE, FEET

Attention:	NO.	DATE	ISSUE/REVISION	APP
0 1"	3	12/10/13	REVISED WELL LOCATIONS/EXIST GRADE	GOA
If this scale bar does not measure 1" then drawing is not original scale.	2	12/11/13	UPDATED VOLUME TABLE	GOA
	1	11/20/13	CHANGED NUMBER OF SHEETS	GOA
	0	11/00/13	FOR BIDDING	GOA
	-	00/10/13	NOT FOR CONSTRUCTION	GOA

Designed: G. Onorato
Checked: G. Onorato
Drawn: S. Mickell
Submittal Date: 11/00/2013

GEI Consultants
1,201 Street
N.W. Suite 100
Washington, DC 20000
202-.2,9,10

TITANIUM METALS CORPORATION
101 NORTH WATER STREET
BLACK MOUNTAIN
INDUSTRIAL CENTER
HENDERSON, NEVADA 9010

GEI Project 13230.0

SLURRY WALL PROJECT

SLURRY WALL WORKING PLATFORM PLAN, ALIGNMENT, AND INFILTRATION TRENCHES

DWG. NO. C

SHEET NO. 1 of 1

X:\2013\13230.0 - TIMET\CAD\DRAWINGS\SLURRY WALL BID PACKAGE DRAWINGS\ADDENDUM 1\C4.WORK PLATFORM PLAN.C3D.REV 12/10/2013

2013\13230.0 - TIMET\CAD\Drawings\Slurry Wall Bid Package Drawings\Addendum 1\C4 Work Platform Plan.C3D.Rev 3

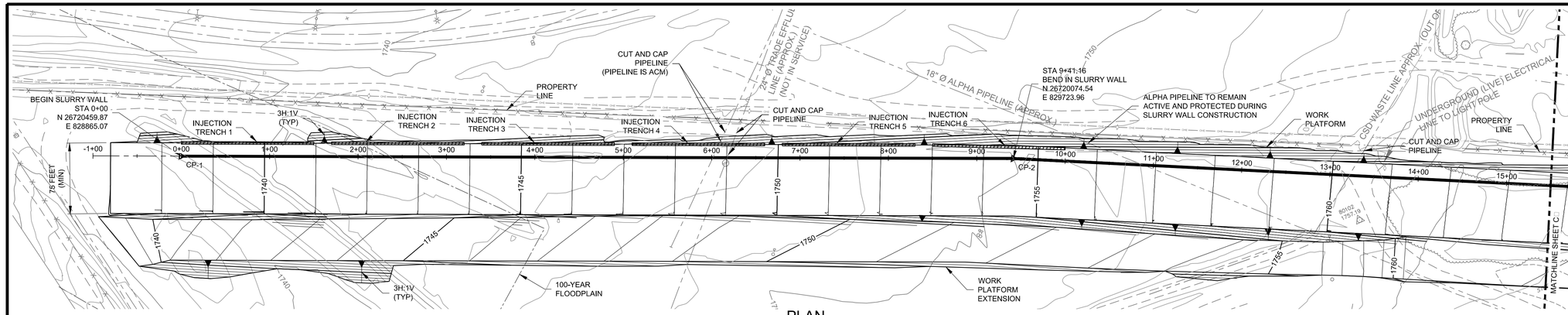

PLAN
SLURRY WALL

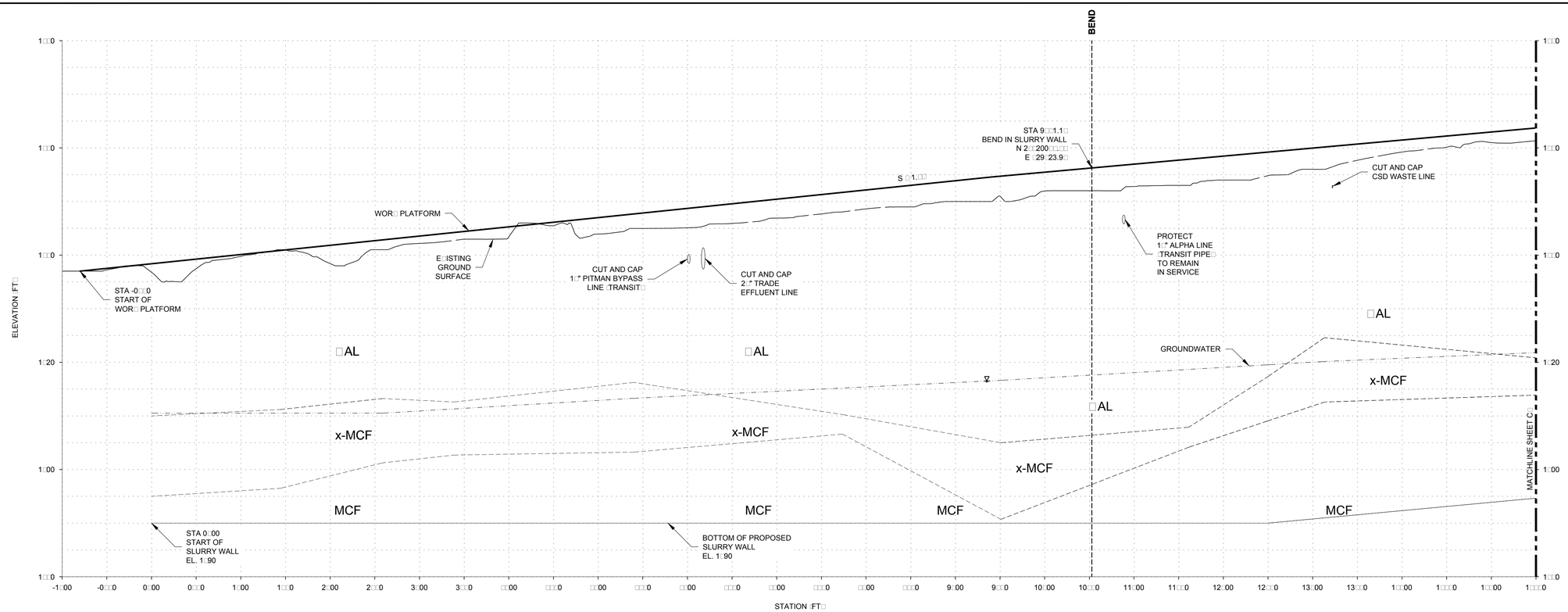

PROFILE
SLURRY WALL

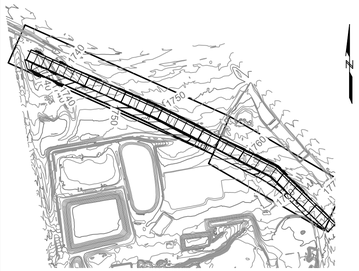

KEY MAP

NOTES:

1. ALL SITE UTILITY LOCATIONS ARE APPROXIMATE, AND THE CONTRACTOR MUST FIELD VERIFIED THOSE LOCATIONS PRIOR TO CONSTRUCTION.
2. ELEVATIONS ARE APPROXIMATE.
3. SOIL LITHOLOGY SHOWS A SIMPLIFICATION OF THE SUBSURFACE.

. INTERPOLATED STRATIGRAPHY LINES HAVE BEEN ADDED FOR VISUAL PRESENTATION ONLY, AND SHOULD NOT BE RELIED UPON FOR ASSESSMENT AND/OR DESIGN PURPOSES AS ACTUAL SITE CONDITIONS MAY DIFFER.

Attention:
0 1"
If this scale bar does not measure 1" then drawing is not original scale.

NO.	DATE	ISSUE/REVISION	APP
1	11/20/13	CHANGED NUMBER OF SHEETS	GOA
0	11/0/13	FOR BIDDING	GOA
-	0/1/13	NOT FOR CONSTRUCTION	GOA

Designed: G. Onorato
Checked: G. Onorato
Drawn: T. Morton
Submittal Date: 11/0/2013

GEI Consultants
1120 I Street N.W. Suite 100
Washington, DC 20001
202-212-9110

TITANIUM METALS CORPORATION
1 NORTH WATER STREET
BLACK MOUNTAIN INDUSTRIAL CENTER
HENDERSON, NEVADA 901
GEI Project 132300

SLURRY WALL PROJECT
SLURRY WALL WORKING PLATFORM PLAN AND PROFILE

DWG. NO. C
SHEET NO. 1 of 2

0 10 120
SCALE, FEET
0 10 20
SCALE, FEET
NOTE: VERTICAL EXAGGERATION

2013\132300 - TIMET\CAD\Drawings\Slurry Wall Bid Package Drawings\Addendum 1\C1-C2 - Slurry Wall Plan and Profile C3D Rev 1

X:\2013\1323080 - TIMET\CAD\DRAWINGS\SLURRY WALL BID PACKAGE DRAWINGS\ADDENDUM 1\C5-C6_SLURRY WALL PLAN AND PROFILE_REV 1.DWG

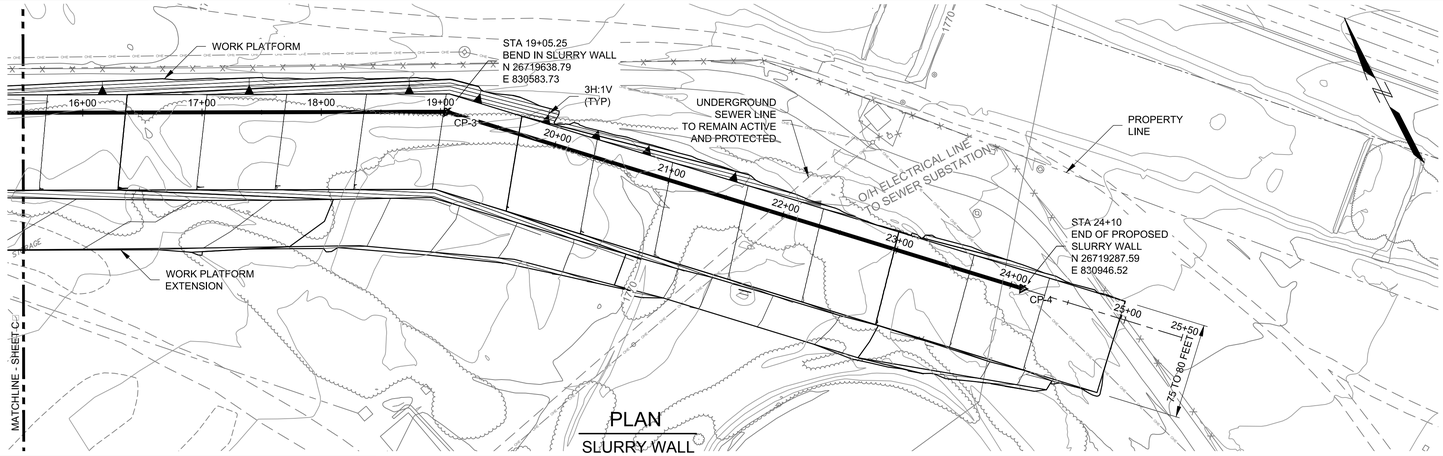

PLAN
SLURRY WALL

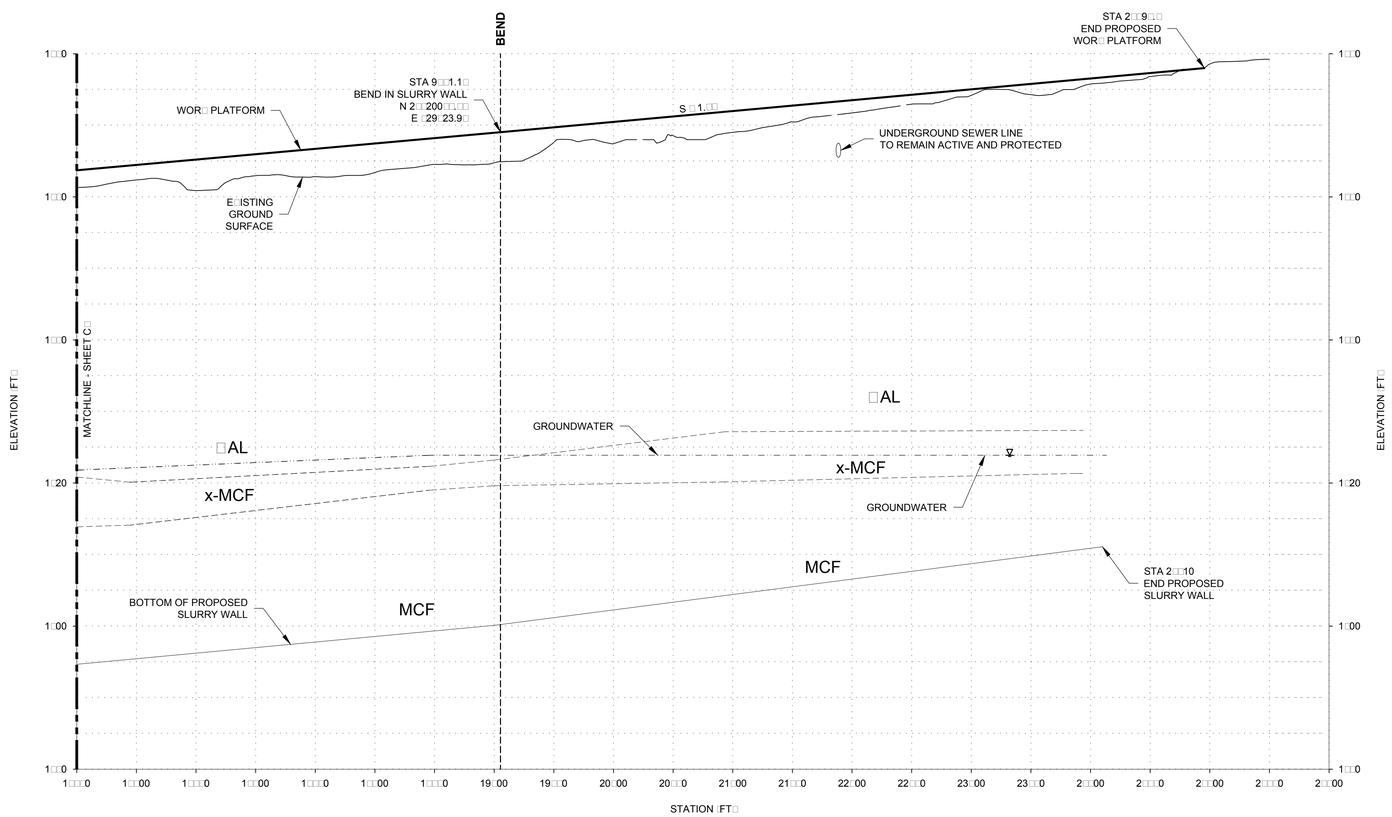

PROFILE
SLURRY WALL

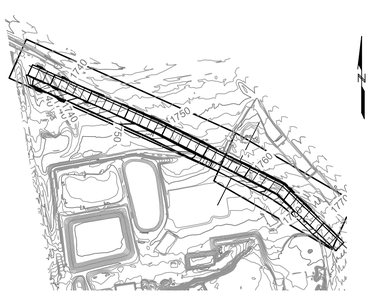

KEY MAP

NOTES:

1. ALL SITE UTILITY LOCATIONS ARE APPRO□IMATE, AND THE CONTRACTOR MUST FIELD VERIFIED THOSE LOCATIONS PRIOR TO CONSTRUCTION.
2. ELEVATIONS ARE APPRO□IMATE.
3. SOIL LITHOLOGY SHOWS A SIMPLIFICATION OF THE SUBSURFACE.

□. INTERPOLATED STRATIGRAPHY LINES HAVE BEEN ADDED FOR VISUAL PRESENTATION ONLY, AND SHOULD NOT BE RELIED UPON FOR ASSESSMENT AND□OR DESIGN PURPOSES AS ACTUAL SITE CONDITIONS MAY DIFFER.

Attention:
0 1"
If this scale bar does not measure 1" then drawing is not original scale.

NO.	DATE	ISSUE□REVISION	APP
1	11□20□13	CHANGED NUMBER OF SHEETS	GOA
0	11□0□13	FOR BIDDING	GOA
-	0□1□13	NOT FOR CONSTRUCTION	GOA

Designed: G. Onorato
Checked: G. Onorato
Drawn: S. Mickell
Submittal Date: 11□0□2013

GEI Consultants
1□20 I Street
N.W. Suite □00
Washington, DC 2000□
202-□2□9□10

TITANIUM METALS CORPORATION
1□1 NORTH WATER STREET
BLAC□ MOUNTAIN
INDUSTRIAL CENTER
HENDERSON, NEVADA □901□

GEI Project 13230□0

SLURRY WALL PROJECT

SLURRY WALL
WOR□ING PLATFORM
PLAN AND PROFILE
□2 OF 2□

DWG. NO.
C□

SHEET NO.
□of 1□

0 □0 120
SCALE, FEET
0 10 20
SCALE, FEET
NOTE: □□ VERTICAL E□AGGERATION

1

□:\2013\13230□0 - TIMET\CAD\Drawings\Slurry Wall Bid Package Drawings\Addendum 1\C□-C□ Slurry Wall Plan and Profile□C3D□ Rev 1

X:\2013\1323000 - TIMET\CAD\DRAWINGS\SLURRY WALL BID PACKAGE DRAWINGS\ADDENDUM 1\C5-C6_SLURRY WALL PLAN AND PROFILE□C3D_REV 1.DWG

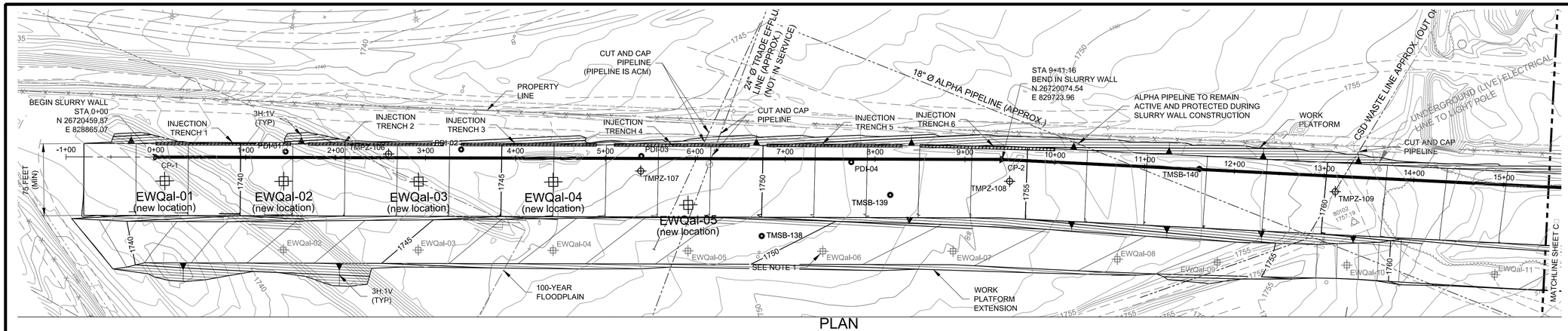

PLAN
SLURRY WALL

NOTES:

1. SEE DWG C3 - SITE PREPARATION.

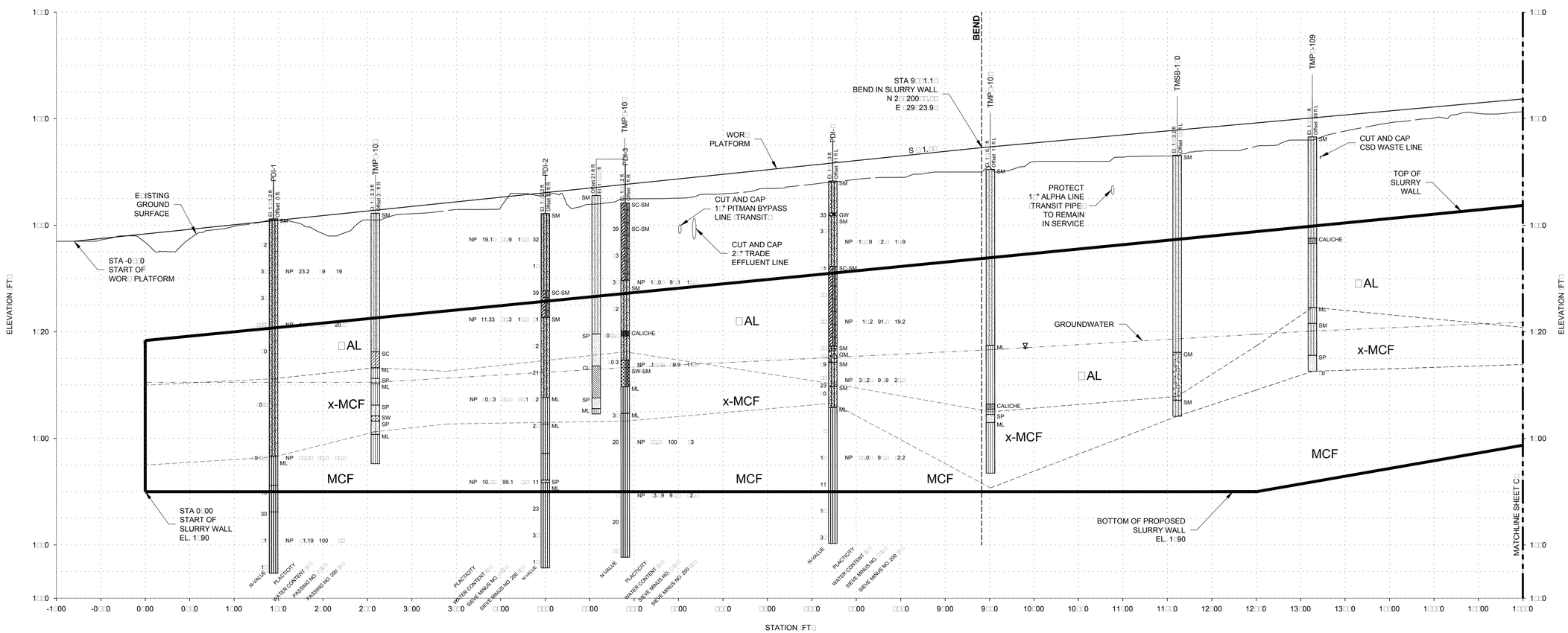

PROFILE
SLURRY WALL

LITHOLOGY:

- MODERATE TO HIGHLY PLASTIC ORGANIC SILTS AND CLAYS (OH)
- FAT CLAY (CH)
- ELASTIC SILT (MH)
- LOW PLASTICITY ORGANIC SILTS AND CLAYS (OL)
- LEAN CLAY OR SANDY LEAN CLAY (CL)
- SILT OR SANDY SILT (ML)
- CLAYEY SAND (SC)
- SILTY SAND, SILTY SAND WITH GRAVEL (SM)
- POORLY GRADED SAND, POORLY GRADED SAND WITH GRAVEL (SP)
- WELL GRADED SAND, WELL GRADED AND WITH GRAVEL (SW)
- CLAYEY GRAVEL (GC)
- SILTY GRAVEL, SILTY GRAVEL WITH SAND (GM)
- POORLY GRADED GRAVEL, POORLY GRADED GRAVEL WITH SAND (GP)
- WELL GRADED GRAVEL, WELL GRADED GRAVEL WITH SAND (GW)
- CALICHE
- WATER LEVEL READING AT TIME OF DRILLING

SM	SILTY SAND
SC	CLAYEY SAND
CL-ML	SILTY CLAY
SP	POORLY GRADED SAND
CALICHE	CALICHE
(AL)	(UARTERNARY ALLUVIUM STRATUM
x-MCF	TRANSITIONAL MUDDY CREE(FORMATION
MCF	MUDDY CREE(FORMATION

G10-B-V1 — E(PLORATION NUMBER
El. 1741.2 ft — ELEVATION AT E(ISTING GRADE
Offset 46 ft R — OFFSET FROM ALIGNMENT

0 0 120
SCALE, FEET

0 10 20
SCALE, FEET
NOTE: (: VERTICAL E: AGGERATION

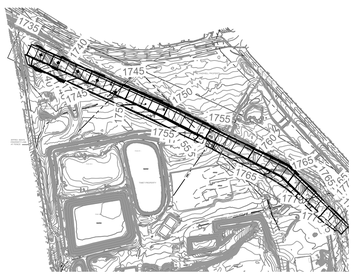

KEY MAP

NOTES:

1. ALL SITE UTILITY LOCATIONS ARE APPRO(IMATE, AND THE CONTRACTOR MUST FIELD VERIFIED THOSE LOCATIONS PRIOR TO CONSTRUCTION.
2. ELEVATIONS ARE APPRO(IMATE.
3. SOIL LITHOLOGY SHOWS A SIMPLIFICATION OF THE SUBSURFACE.

(. INTERPOLATED STRATIGRAPHY LINES HAVE BEEN ADDED FOR VISUAL PRESENTATION ONLY, AND SHOULD NOT BE RELIED UPON FOR ASSESSMENT AND/OR DESIGN PURPOSES AS ACTUAL SITE CONDITIONS MAY DIFFER.

Attention:
0 1"
If this scale bar does not measure 1" then drawing is not original scale.

NO.	DATE	ISSUE/REVISION	APP
1	11/20/13	CHANGED NUMBER OF SHEETS	GOA
0	11/0(/13	FOR BIDDING	GOA
-	0(/1(/13	NOT FOR CONSTRUCTION	GOA

Designed: G. Onorato
Checked: G. Onorato
Drawn: S. Mickell
Submittal Date: 11/0(/2013

GEI Consultants
1(20 I Street
N.W. Suite (00
Washington, DC 2000(
202-(2(-(9(10

TITANIUM METALS CORPORATION
1(1 NORTH WATER STREET
BLAC(MOUNTAIN
INDUSTRIAL CENTER
HENDERSON, NEVADA (901(

GEI Project 13230(0

SLURRY WALL PROJECT

SLURRY WALL PLAN AND GEOLOGIC PROFILE
(1 OF 2(

DWG. NO. C(

SHEET NO. (of 1(

1

X:\2013\13230(0 - TIMET\CAD\DRAWINGS\SLURRY WALL BID PACKAGE DRAWINGS\ADDENDUM 1\C7-C8_SLURRY WALL PLANS AND PROFILES_REV 2.DWG

(:2013\13230:0 - TIMET\CAD\Drawings\Slurry Wall Bid Package Drawings\Addendum 1\C(-C((Slurry Wall Plans and Geologic Profiles(:Rev 2

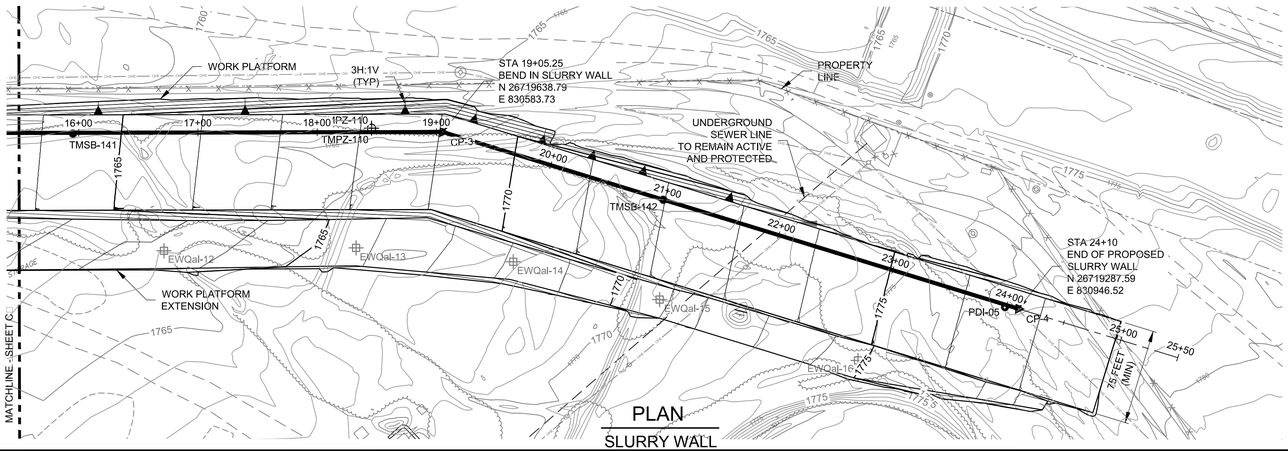

PLAN
SLURRY WALL

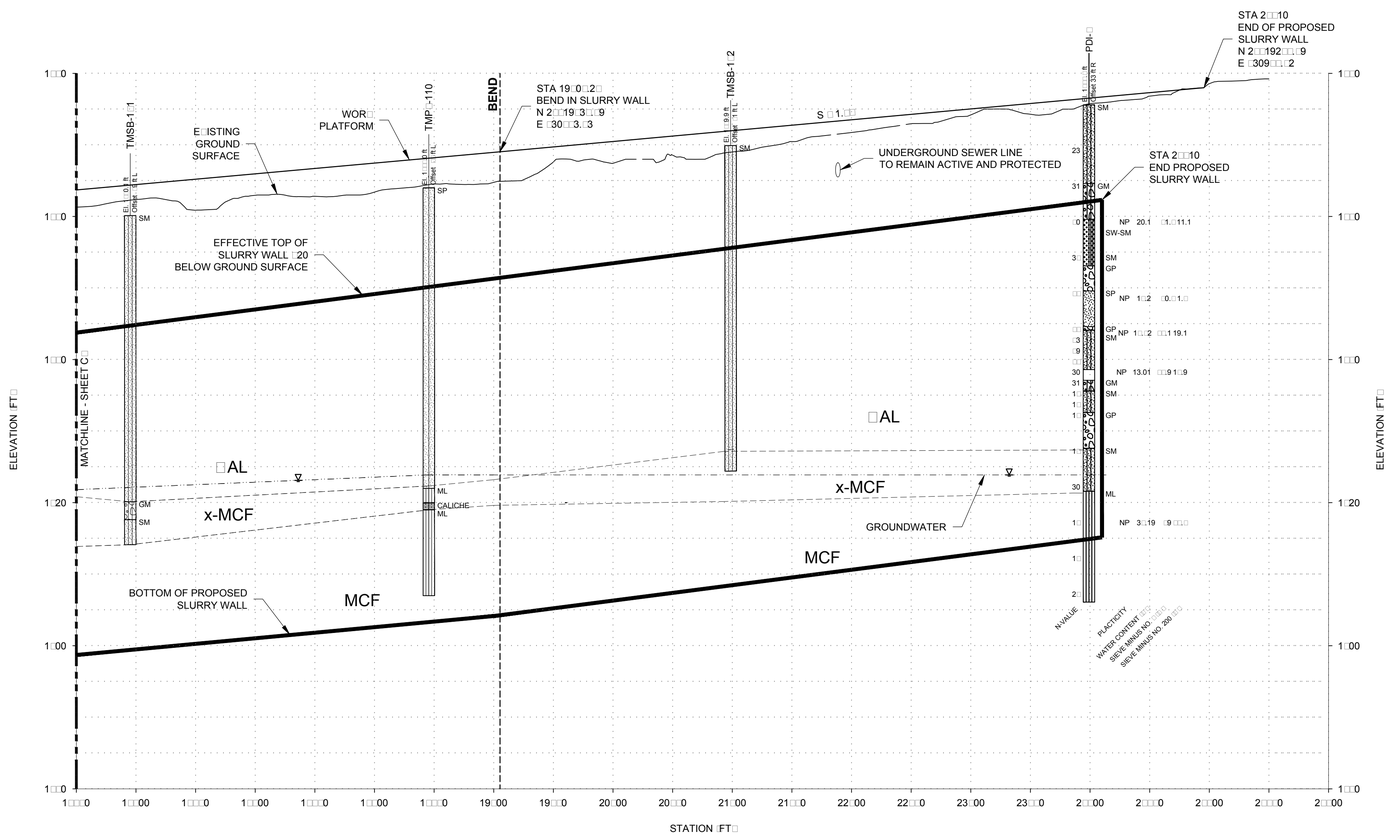

PROFILE
SLURRY WALL

LITHOLOGY:

- MODERATE TO HIGHLY PLASTIC ORGANIC SILTS AND CLAYS □OH□
- FAT CLAY □CH□
- ELASTIC SILT □MH□
- LOW PLASTICITY ORGANIC SILTS AND CLAYS □OL□
- LEAN CLAY OR SANDY LEAN CLAY □CL□
- SILT OR SANDY SILT □ML□
- CLAYEY SAND □SC□
- SILTY SAND, SILTY SAND WITH GRAVEL □SM□
- POORLY GRADED SAND, POORLY GRADED SAND WITH GRAVEL □SP□
- WELL GRADED SAND, WELL GRADED AND WITH GRAVEL □SW□
- CLAYEY GRAVEL □GC□
- SILTY GRAVEL, SILTY GRAVEL WITH SAND □GM□
- POORLY GRADED GRAVEL, POORLY GRADED GRAVEL WITH SAND □GP□
- WELL GRADED GRAVEL, WELL GRADED GRAVEL WITH SAND □GW□
- CALICHE
- WATER LEVEL READING AT TIME OF DRILLING

SM	SILTY SAND
SC	CLAYEY SAND
CL-ML	SILTY CLAY
SP	POORLY GRADED SAND
CALICHE	CALICHE
□AL	□UARTERNARY ALLUVIUM STRATUM
x-MCF	TRANSITIONAL MUDDY CREE□ FORMATION
MCF	MUDDY CREE□ FORMATION

G10-B-V1 — E□PLORATION NUMBER
El. 1741.2 ft — ELEVATION AT E□ISTING GRADE
Offset 46 ft R — OFFSET FROM ALIGNMENT

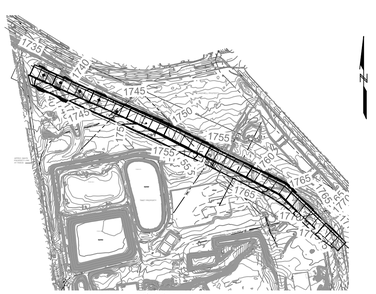

KEY MAP

NOTES:

1. ALL SITE UTILITY LOCATIONS ARE APPRO□IMATE, AND THE CONTRACTOR MUST FIELD VERIFIED THOSE LOCATIONS PRIOR TO CONSTRUCTION.
2. ELEVATIONS ARE APPRO□IMATE.
3. SOIL LITHOLOGY SHOWS A SIMPLIFICATION OF THE SUBSURFACE.

□. INTERPOLATED STRATIGRAPHY LINES HAVE BEEN ADDED FOR VISUAL PRESENTATION ONLY, AND SHOULD NOT BE RELIED UPON FOR ASSESSMENT AND OR DESIGN PURPOSES AS ACTUAL SITE CONDITIONS MAY DIFFER.

0 □0 120
SCALE, FEET

0 10 20
SCALE, FEET
NOTE: □□ VERTICAL E□AGGERATION

Attention:
0 1"
If this scale bar does not measure 1" then drawing is not original scale.

NO.	DATE	ISSUE□REVISION	APP
1	11□20□13	CHANGED NUMBER OF SHEETS	GOA
0	11□0□13	FOR BIDDING	GOA
-	0□□1□13	NOT FOR CONSTRUCTION	GOA

Designed: G. Onorato
Checked: G. Onorato
Drawn: S. Mickell
Submittal Date: 11□0□2013

GEI Consultants
1□20 I Street
N.W. Suite □00
Washington, DC 2000□
202-□2□9□10

TITANIUM METALS CORPORATION
1□1 NORTH WATER STREET
BLAC□ MOUNTAIN
INDUSTRIAL CENTER
HENDERSON, NEVADA □901□

GEI Project 13230□0

SLURRY WALL PROJECT

SLURRY WALL
GEOLOGIC PROFILE
□2 OF 2□

DWG. NO. C□
SHEET NO. 9 of 1□

X:\2013\13230□0 - TIMET\CAD\DRAWINGS\SLURRY WALL BID PACKAGE DRAWINGS\ADDENDUM 1\C7-C8.SLURRY WALL PLANS AND PROFILES.REV 2.DWG

□\2013\13230□0 - TIMET\CAD\Drawings\Slurry Wall Bid Package Drawings\Addendum 1\C□-C□□ Slurry Wall Plans and Geologic Profiles: Rev 2

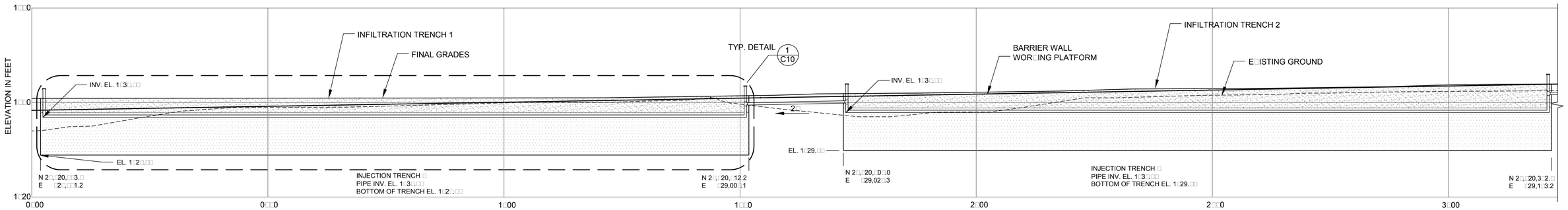

TRENCH PROFILES

1:10

0 10 20

SCALE, FEET

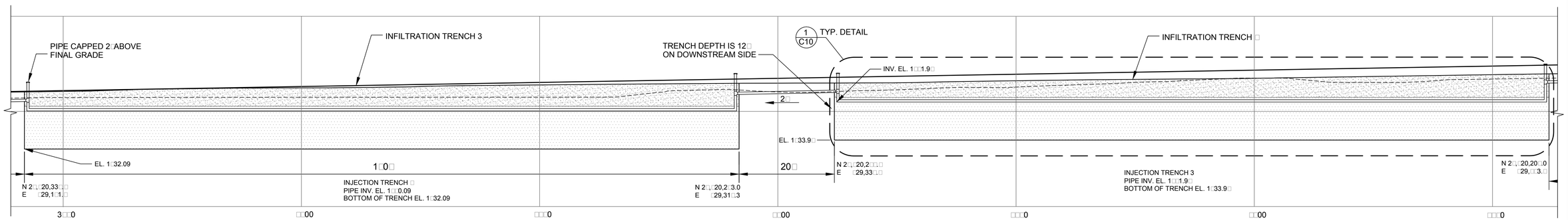

TRENCH PROFILES

1:10

0 10 20

SCALE, FEET

Attention:	NO.	DATE	ISSUE/REVISION	APP
0 1"				
If this scale bar does not measure 1" then drawing is not original scale.				
	1	11/20/13	CHANGED NUMBER OF SHEETS	GOA
	0	11/0□/13	FOR BIDDING	GOA
	-	0□/1□/13	NOT FOR CONSTRUCTION	GOA

Designed: G. Onorato
Checked: G. Onorato
Drawn: T. Morton
Submittal Date: 11/0□/2013

GEI Consultants
1□20 I Street, N.W. Suite□00
Washington, DC 2000□
202-□2□-9□10

TITANIUM METALS CORPORATION
1□1 NORTH WATER STREET
BLAC□ MOUNTAIN INDUSTRIAL CENTER
HENDERSON, NEVADA □901□

GEI Project 13230□0

SLURRY WALL PROJECT

INFILTRATION TRENCH PROFILES
□1 OF 2□

DWG. NO. C9

SHEET NO. 10 of 1□

1

□\2013\13230□0 - TIMET\CAD\Drawings\Slurry Wall Bid Package Drawings\Addendum 1\C9□Infiltration Trench Plan□Profile□and Slab Details□Rev 1

X:\2013\13230□0 - TIMET\CAD\DRAWINGS\SLURRY WALL BID PACKAGE DRAWINGS\ADDENDUM 1\C9_INFILTRATION TRENCH PLAN_PROFILE AND SLAB DETAILS.REV 1.DWG

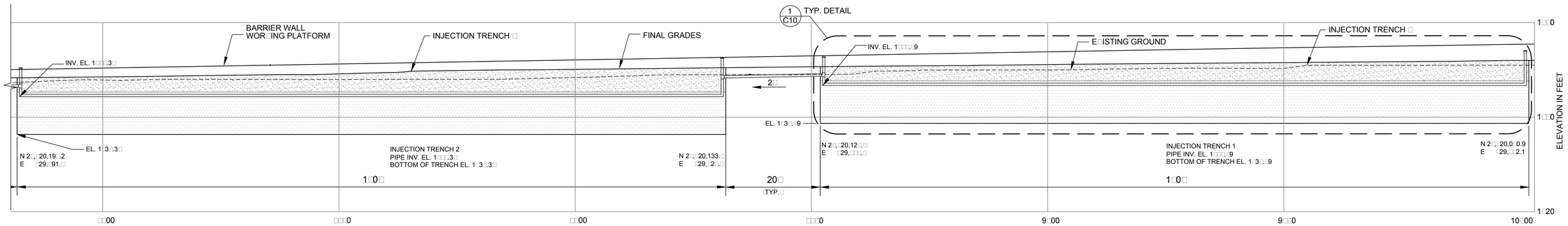

TRENCH PROFILES

1:10

0 10 20
SCALE, FEET

NOTES

1. INJECTION TRENCHES □□□WILL BE 1□0□LONG SEPARATED BY 20□ OF NATIVE SOIL.
2. INJECTION TRENCHES □□□WILL BE LOCATED 1□□DOWN GRADIENT OF SLURRY WALL UNLESS SITE CONDITIONS □POWER LINE OFFSET RE□UIREMENTS FORCE A CHANGE IN A LOCATION.
3. INJECTION TRENCH PIPES WILL BE CONNECTED WITH A □" DIA. HDPE SDR 1□NON-PERFORATED PIPE BETWEEN TRENCHES.

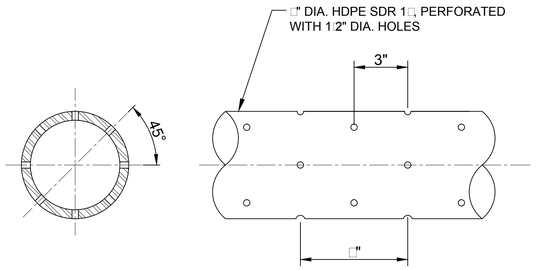

3 PIPE PERFORATION DETAIL

N.T.S.

0 N.T.S.
SCALE, FEET

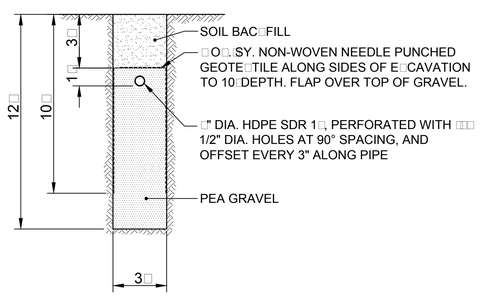

2 INJECTION TRENCH DETAIL

1:4

0 □
SCALE, FEET

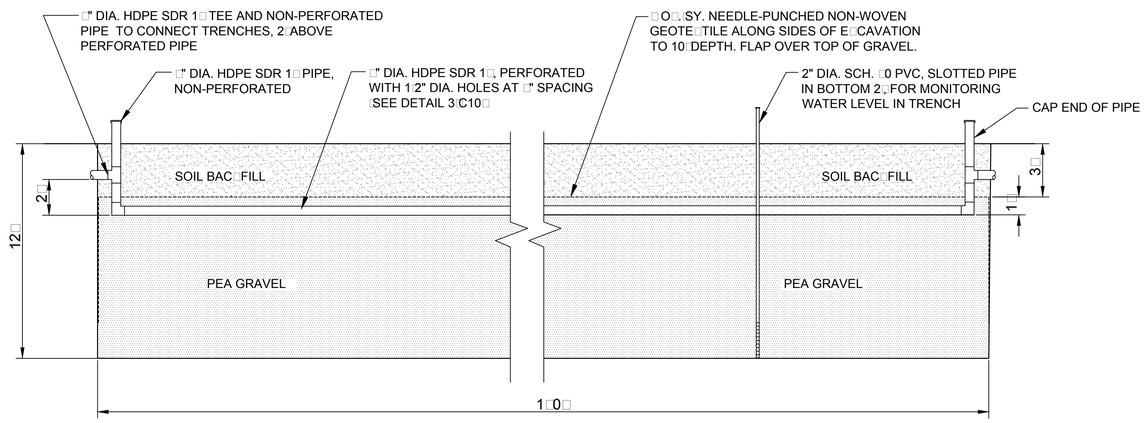

1 INJECTION TRENCH DETAIL

1:4

0 □
SCALE, FEET

Attention:	NO.	DATE	ISSUE/REVISION	APP
0 1"				
If this scale bar does not measure 1" then drawing is not original scale.	1	11/20/13	CHANGED NUMBER OF SHEETS	GOA
	0	11/0□/13	FOR BIDDING	GOA
	-	0□/1□/13	NOT FOR CONSTRUCTION	GOA

Designed: G. Onorato
Checked: G. Onorato
Drawn: T. Morton
Submittal Date: 11/0□/2013

GEI Consultants
1□20 I Street
N.W. Suite □00
Washington, DC 2000□
202-□2□9□10

TITANIUM METALS CORPORATION
1□1 NORTH WATER STREET
BLAC□ MOUNTAIN
INDUSTRIAL CENTER
HENDERSON, NEVADA □901□

GEI Project 13230□0

SLURRY WALL PROJECT

INFILTRATION TRENCH PROFILES
□2 OF 2□AND DETAILS

DWG. NO. C10

SHEET NO. 11 of 1□

X:\2013\13230□0 - TIMET\CAD\DRAWINGS\SLURRY WALL BID PACKAGE DRAWINGS\ADDENDUM 1\C10_INFILTRATION TRENCH PLAN_PROFILE AND SLAB DETAILS_REV 1.DWG

□\2013\13230□0 - TIMET\CAD\Drawings\Slurry Wall Bid Package Drawings\Addendum 1\C10□Infiltration Trench Plan□Profile□and Slab Details□Rev 1

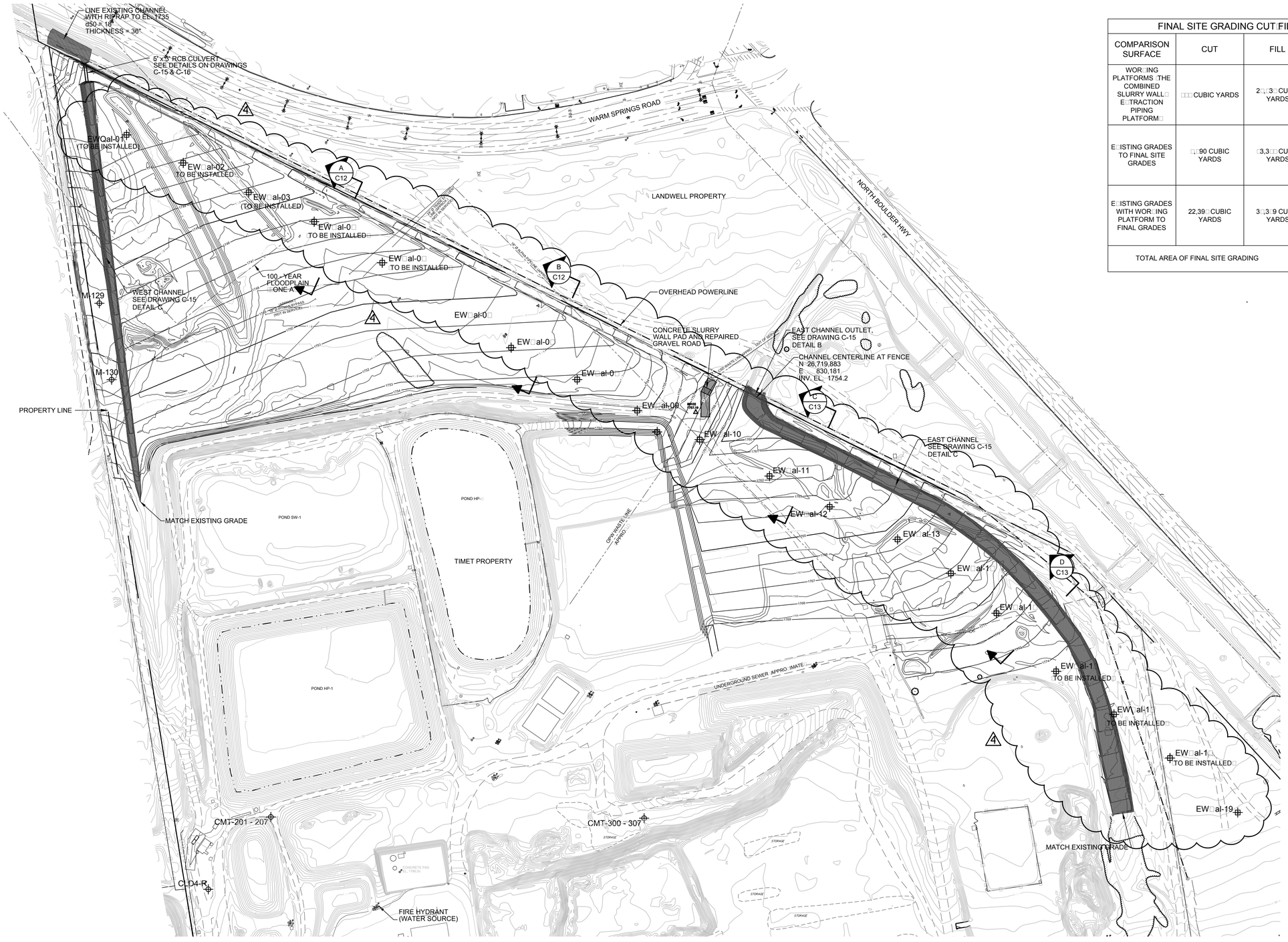

FINAL SITE GRADING CUT□FILL TABLE				
COMPARISON SURFACE	CUT	FILL	NET	DESCRIPTION□REFERENCE
WOR□ING PLATFORMS□THE COMBINED SLURRY WALL□ E□TRACTION PIPING PLATFORM□	□□□ CUBIC YARDS	2□,□3□ CUBIC YARDS	2□,□□1 CUBIC YARDS	VOLUME TO CONSTRUCT THE WOR□ING PLATFORMS FROM E□ISTING GRADES. WOR□ING PLATFORMS SHOWN ON DRAWING C□.
E□ISTING GRADES TO FINAL SITE GRADES	□,□90 CUBIC YARDS	□3,3□□ CUBIC YARDS	39,□9□ CUBIC YARDS	VOLUME NEEDED TO CUT□FILL□REGRADE FROM E□ISTING GRADES TO FINAL SITE GRADES. FINAL SITE GRADES SHOWN ON DRAWING C11.
E□ISTING GRADES WITH WOR□ING PLATFORM TO FINAL GRADES	22,39□ CUBIC YARDS	3□,3□9 CUBIC YARDS	12,9□2 CUBIC YARDS	VOLUME NEEDED TO CUT□FILL□REGRADE FROM E□ISTING GRADES WITH THE WOR□ING PLATFORMS TO FINAL SITE GRADES. FINAL SITE GRADES SHOWN ON DRAWING C11.
TOTAL AREA OF FINAL SITE GRADING		20.□acres □□□,□□□sf□		

N

0 100 200
SCALE, FEET

Attention:
0 1"
If this scale bar does not measure 1" then drawing is not original scale.

NO.	DATE	ISSUE□REVISION	APP
□	12□1□□13	RELOCATED WELLS	GOA
3	11□20□13	CHANGED NUMBER OF SHEETS	GOA
2	11□20□13	REV. ADDED STORM STRUCTURES□DETAILS	GOA
1	11□12□13	REV. VOL. TABLE\RELOCATED OH POWER LINE	JMT
0	11□0□□13	FOR BIDDING	GOA
-	0□1□□13	NOT FOR CONSTRUCTION	GOA

Designed: G. Onorato
Checked: G. Onorato
Drawn: T. Morton
Submittal Date: 11□0□2013

GEI Consultants
1□20□I Street
N.W. Suite □00
Washington, DC 2000□
202-□2□9□10

TITANIUM METALS CORPORATION
1□1 NORTH WATER STREET
BLAC□ MOUNTAIN
INDUSTRIAL CENTER
HENDERSON, NEVADA □901□

GEI Project 13230□0

SLURRY WALL PROJECT

FINAL GRADING PLAN

DWG. NO. C11

SHEET NO. 12 of 1□

3

X:\2013\1323080 - TIMET\CAD\DRAWINGS\SLURRY WALL BID PACKAGE DRAWINGS\ADDENDUM 1\C11_REV-4_FINAL GRADING PLAN.DWG 02/17/13

□\2013\13230□0 - TIMET\CAD\Drawings\Slurry Wall Bid Package Drawings\Addendum 1\C11□Rev-□ Final Grading Plan

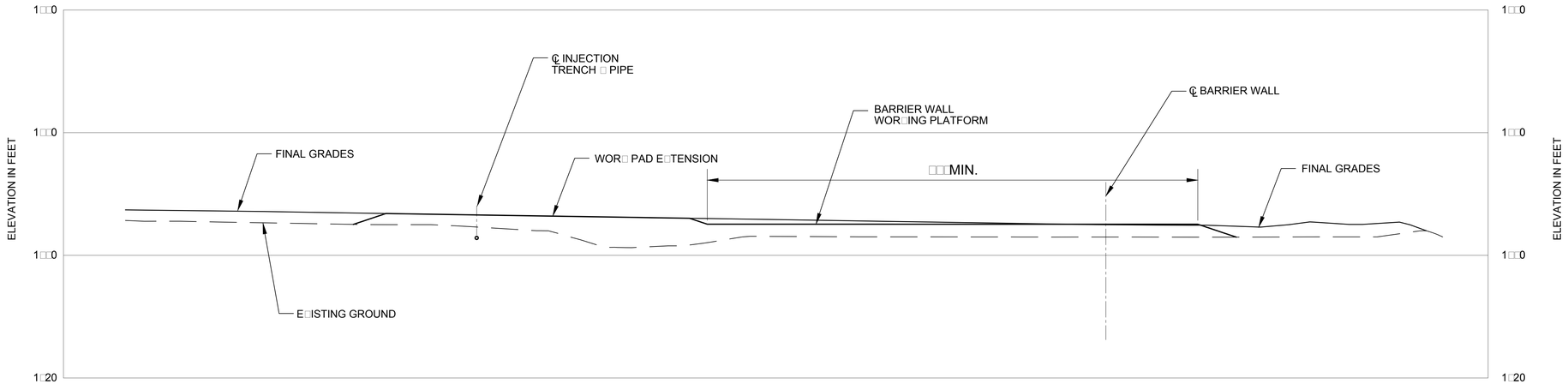

A CROSS SECTION @ STA. 5+00

1:10

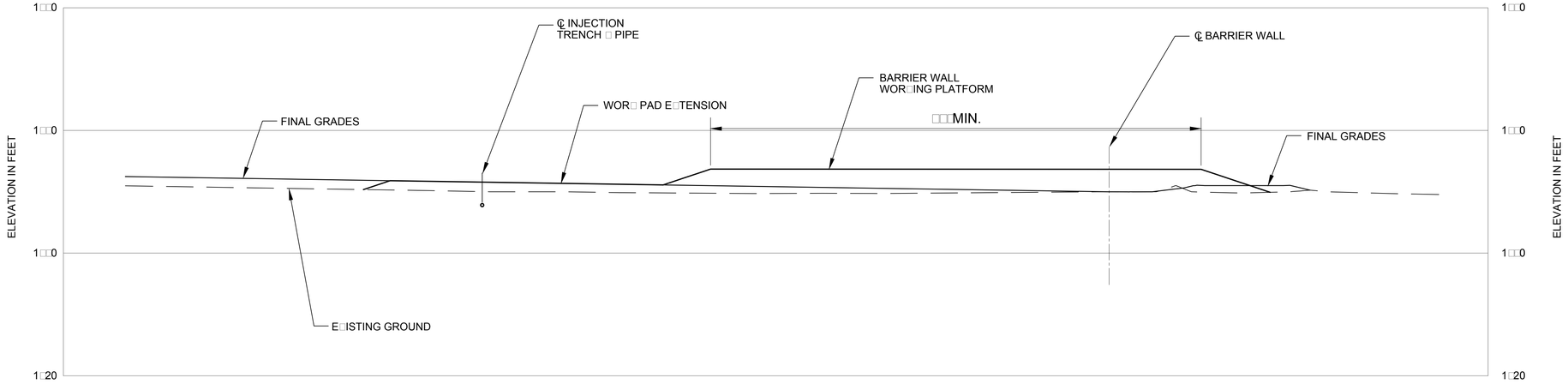

B CROSS SECTION @ STA. 10+00

1:10

0 10 20

SCALE, FEET

Attention:	NO.	DATE	ISSUE/REVISION	APP
0 1"				
	1	11/20/13	CHANGED NUMBER OF SHEETS	GOA
If this scale bar does not measure 1" then drawing is not original scale.	0	11/0□/13	FOR BIDDING	GOA
	-	0□/1□/13	NOT FOR CONSTRUCTION	GOA

Designed: G. Onorato
Checked: G. Onorato
Drawn: T. Morton
Submittal Date: 11/0□/2013

GEI Consultants
1□20 I Street,
N.W. Suite □00
Washington, DC 2000□
202-□2□9□10

TITANIUM METALS CORPORATION
1□1 NORTH WATER STREET
BLAC□ MOUNTAIN
INDUSTRIAL CENTER
HENDERSON, NEVADA □901□

GEI Project 13230□0

SLURRY WALL PROJECT

FINAL GRADE CROSS SECTIONS
□1 OF 2□

DWG. NO. C12

SHEET NO. 13 of 1□

1

X:\2013\13230□0 - TIMET\CAD\DRAWINGS\SLURRY WALL BID PACKAGE DRAWINGS\ADDENDUM 1\C12_FINAL GRADE CROSS SECTIONS.DWG 11/26/13

□:\2013\13230□0 - TIMET\CAD\Drawings\Slurry Wall Bid Package Drawings\Addendum 1\C12: Final Grade Cross Sections: Rev 1

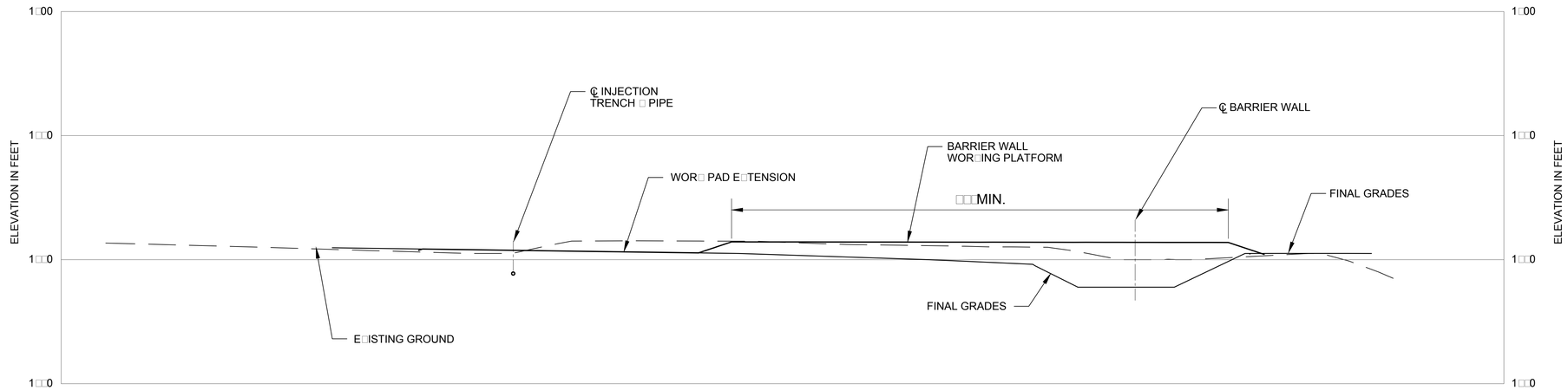

C CROSS SECTION @ STA. 16+00

1:10

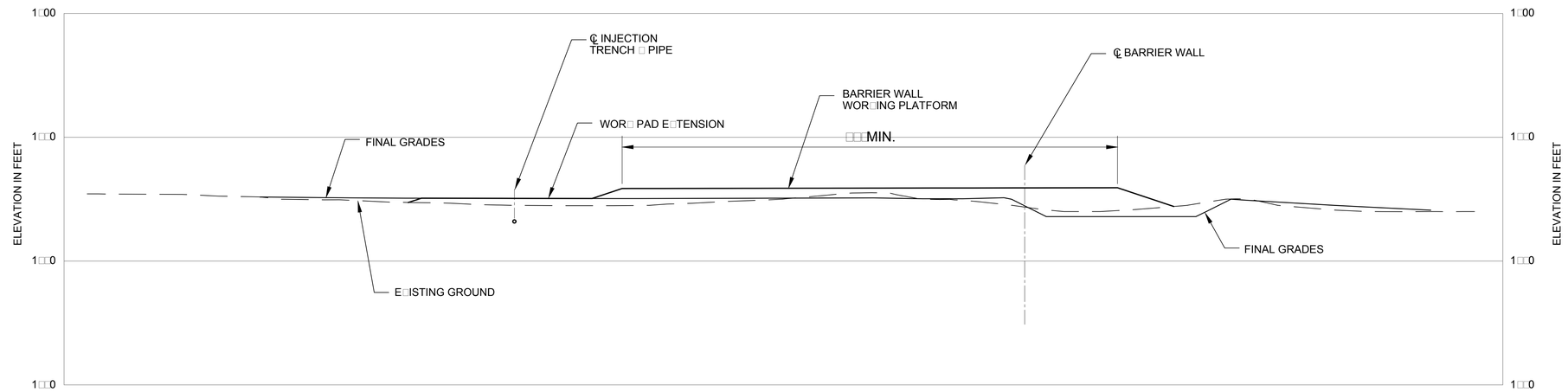

D CROSS SECTION @ STA. 22+00

1:10

0 10 20
SCALE, FEET

Attention:	NO.	DATE	ISSUE/REVISION	APP
0 1"				
	1	11/20/13	CHANGED NUMBER OF SHEETS	GOA
If this scale bar does not measure 1" then drawing is not original scale.	0	11/0□/13	FOR BIDDING	GOA
	-	0□/1□/13	NOT FOR CONSTRUCTION	GOA

Designed: G. Onorato
Checked: G. Onorato
Drawn: T. Morton
Submittal Date: 11/0□/2013

GEI Consultants
1□20 I Street
N.W. Suite □00
Washington, DC 2000□
202-□2□9□10

TITANIUM METALS CORPORATION
1□1 NORTH WATER STREET
BLAC□ MOUNTAIN
INDUSTRIAL CENTER
HENDERSON, NEVADA □901□

GEI Project 13230□0

SLURRY WALL PROJECT

FINAL GRADE CROSS SECTIONS
□2 OF 2□

DWG. NO. C13

SHEET NO. 1□ of 1□

□:\2013\13230□0 - TIMET\CAD\Drawings\Slurry Wall Bid Package Drawings\Addendum 1\C13_Final Grade Cross Sections: Rev 1

X:\2013\1323080 - TIMET\CAD\DRAWINGS\SLURRY WALL BID PACKAGE DRAWINGS\ADDENDUM 1\C13_FINAL GRADE CROSS SECTIONS.DWG 11/20/13

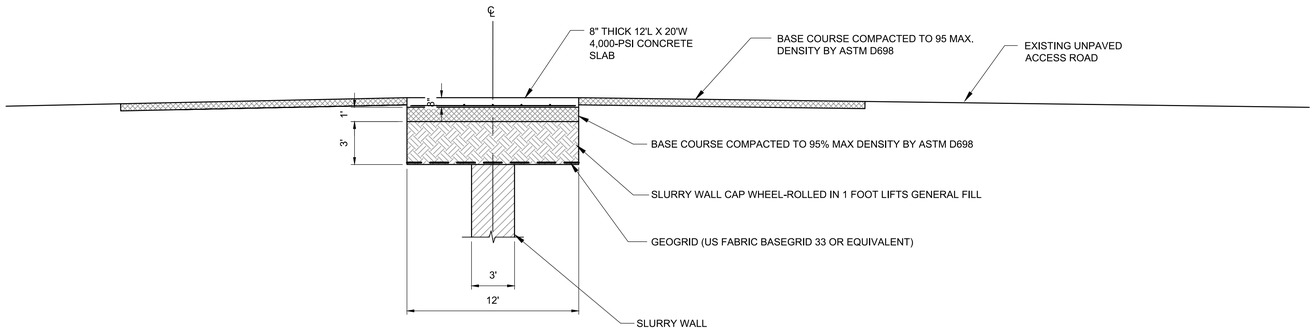

SLURRY WALL ROAD CROSSING SLAB SECTION

NO SCALE

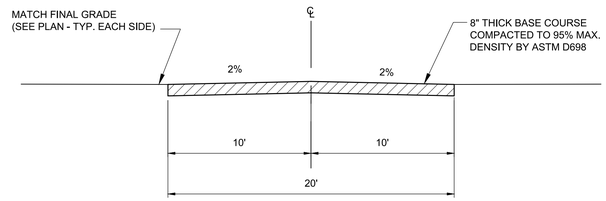

ROAD SECTION

NO SCALE

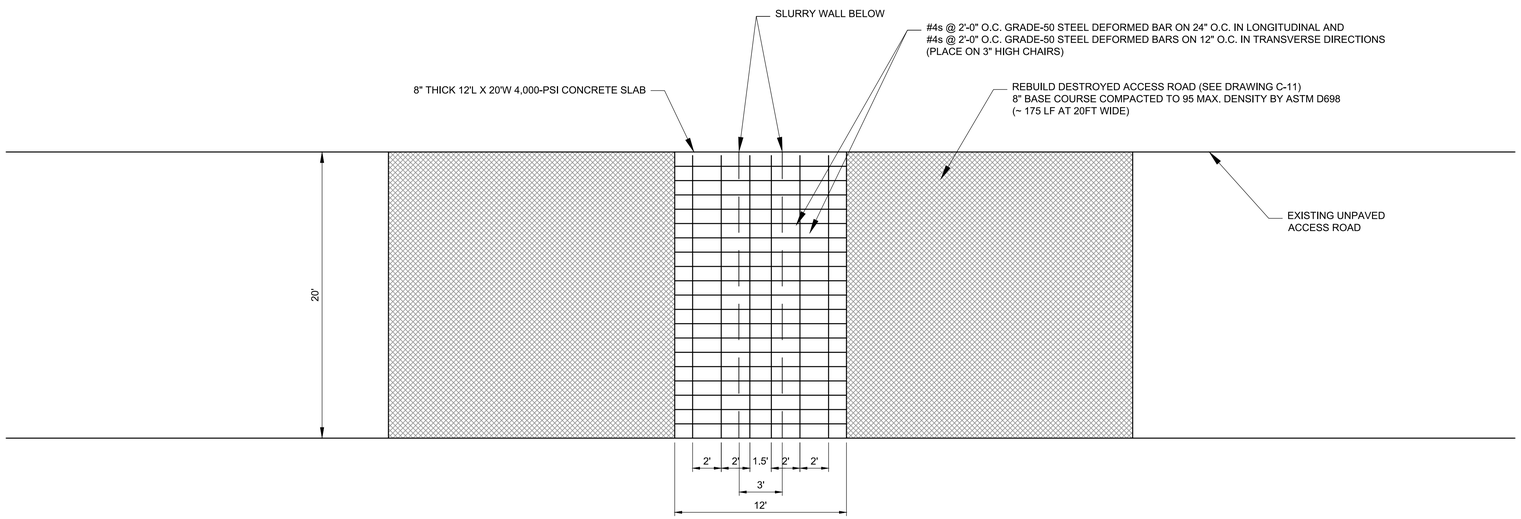

SLURRY WALL ROAD CROSSING SLAB PLAN

NO SCALE

Attention:				
0 1"				
If this scale bar does not measure 1" then drawing is not original scale.	1	11/20/13	CHANGED NUMBER OF SHEETS	GOA
	0	11/0/13	FOR BIDDING	GOA
	-	0/1/13	NOT FOR CONSTRUCTION	GOA
	NO.	DATE	ISSUE/REVISION	APP

Designed: G. Onorato
Checked: G. Onorato
Drawn: T. Morton
Submittal Date: 11/0/2013

GEI Consultants
1 20 I Street, N.W. Suite 00
Washington, DC 2000
202 2 9 10

TITANIUM METALS CORPORATION
1 1 NORTH WATER STREET
BLAC MOUNTAIN
INDUSTRIAL CENTER
HENDERSON, NEVADA 901

GEI Project 13230 0

SLURRY WALL PROJECT

SLURRY WALL ROAD CROSSING DETAILS

DWG. NO. C1

SHEET NO. 1 of 1

1

X:\2013\13230 0 - TIMET\CAD\DRAWINGS\SLURRY WALL BID PACKAGE DRAWINGS\ADDENDUM 1\C14_WORKING PLATFORM_SLURRY WALL CAP SECTIONS_REV 1.DWG

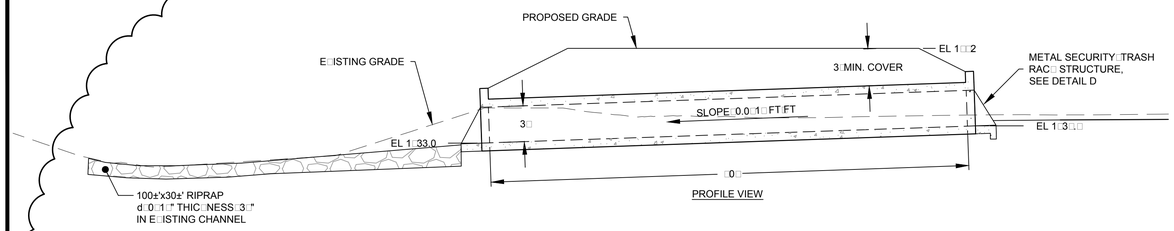

PROFILE VIEW

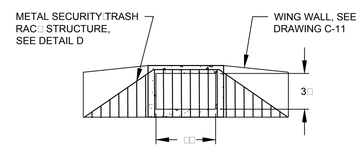

END VIEW

CHANNEL SCHEDULE TABLE

LOCATION	"B" BOTTOM (feet)	"D" DEPTH (inches)	d50 RIPRAP (inches)
WEST	8'	36" min.	6"
EAST STA 0+00 TO STA 5+06	16'	36" min.	9"
EAST STA 5+06 TO STA 10+57	20'	36" min.	8"
EAST STA 10+57 TO STA 12+83	VARIES	24" min.	8"

Notes:
1. "D" Depth refers to the outside edge of the bottom of channel.
2. Riprap thickness shall be twice the d50.

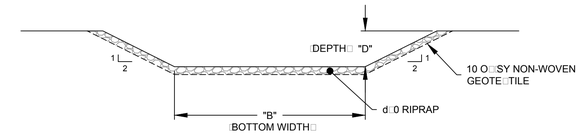

NOTE:
SEE CHANNEL SCHEDULE TABLE FOR DIMENSIONS

DETAIL C - WEST + EAST CHANNEL DETAIL

SCALE: 1" = 6'-0"

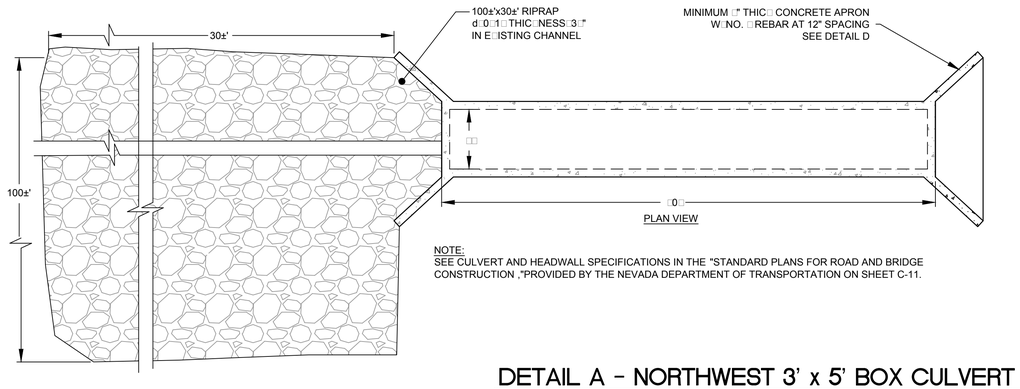

PLAN VIEW

NOTE:
SEE CULVERT AND HEADWALL SPECIFICATIONS IN THE "STANDARD PLANS FOR ROAD AND BRIDGE CONSTRUCTION ,"PROVIDED BY THE NEVADA DEPARTMENT OF TRANSPORTATION ON SHEET C-11.

DETAIL A - NORTHWEST 3' x 5' BOX CULVERT DETAIL

SCALE: 1" = 6'-0"

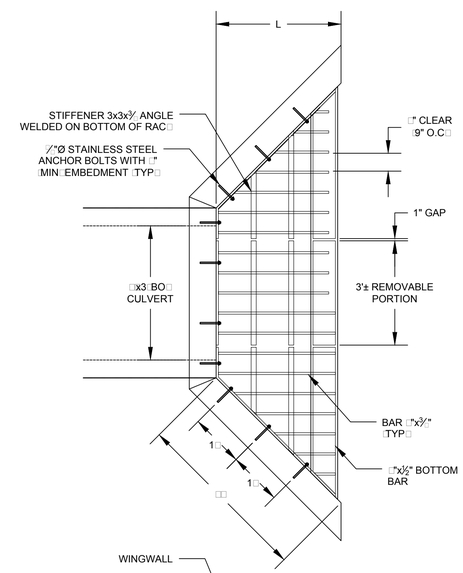

PLAN VIEW

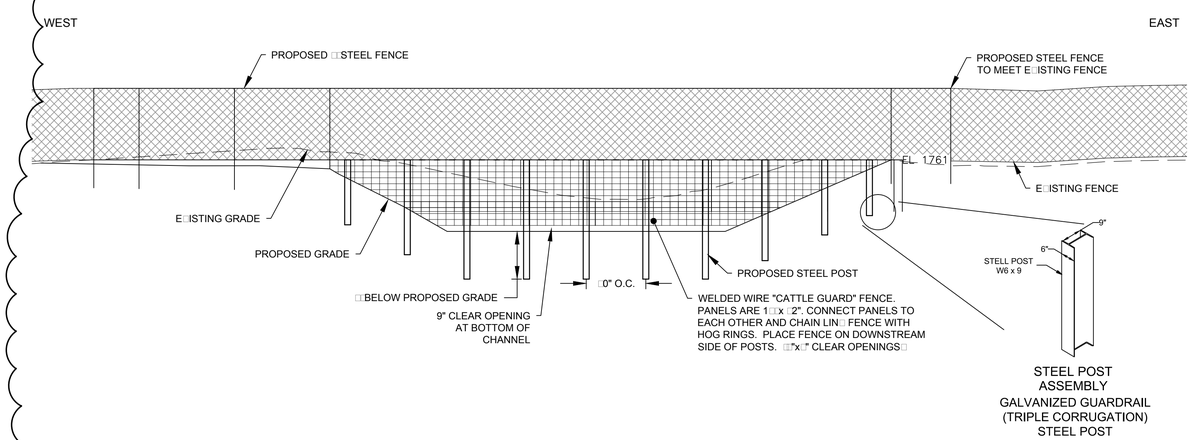

DETAIL B - EAST CHANNEL SECURITY STRUCTURE

SCALE: 1" = 6'-0"

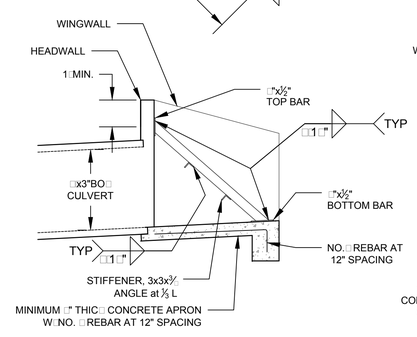

SECTION

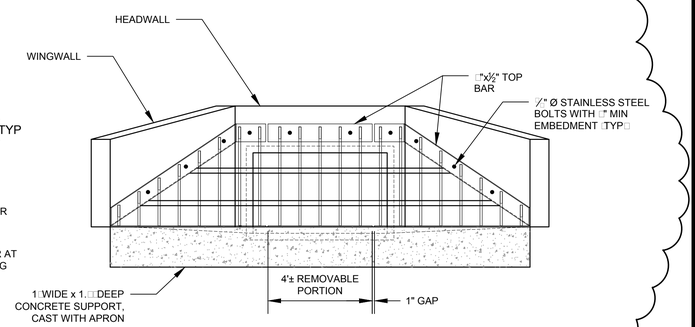

ELEVATION

DETAIL D - TRASH RACK DETAIL

N.T.S.

NO.	DATE	ISSUE/REVISION	APP
1	11/20/13	REV. ADDED STORM STRUCTURES/DETAILS	GOA
0	11/0□/13	FOR BIDDING	GOA
-	0□/1□/13	NOT FOR CONSTRUCTION	GOA

Attention: 0 1" If this scale bar does not measure 1" then drawing is not original scale.

Designed: G. Onorato
Checked: G. Onorato
Drawn: T. Morton
Submittal Date: 11/0□/2013

GEI Consultants
1□20 I Street
N.W. Suite □00
Washington, DC 2000□
202-□2□9□10

TITANIUM METALS CORPORATION
1□1 NORTH WATER STREET
BLAC□ MOUNTAIN
INDUSTRIAL CENTER
HENDERSON, NEVADA □901□

GEI Project 13230□0

SLURRY WALL PROJECT

STORM STRUCTURE DETAILS
□1 OF 2□

DWG. NO. C1□

SHEET NO. 1□ of 1□

1

X:\2013\13230□0 - TIMET\CAD\DRAWINGS\SLURRY WALL BID PACKAGE DRAWINGS\ADDENDUM 1\C15_DETAILS_REV 1.DWG 12/6/13

□:\2013\13230□0 - TIMET\CAD\Drawings\Slurry Wall Bid Package Drawings\Addendum 1\C1□Details□Rev 1

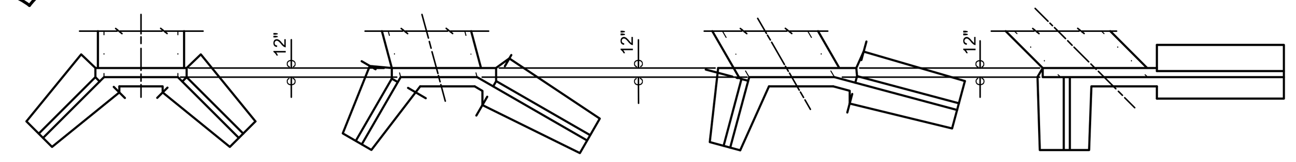

0°SKEW 15°SKEW 30°SKEW 45°SKEW

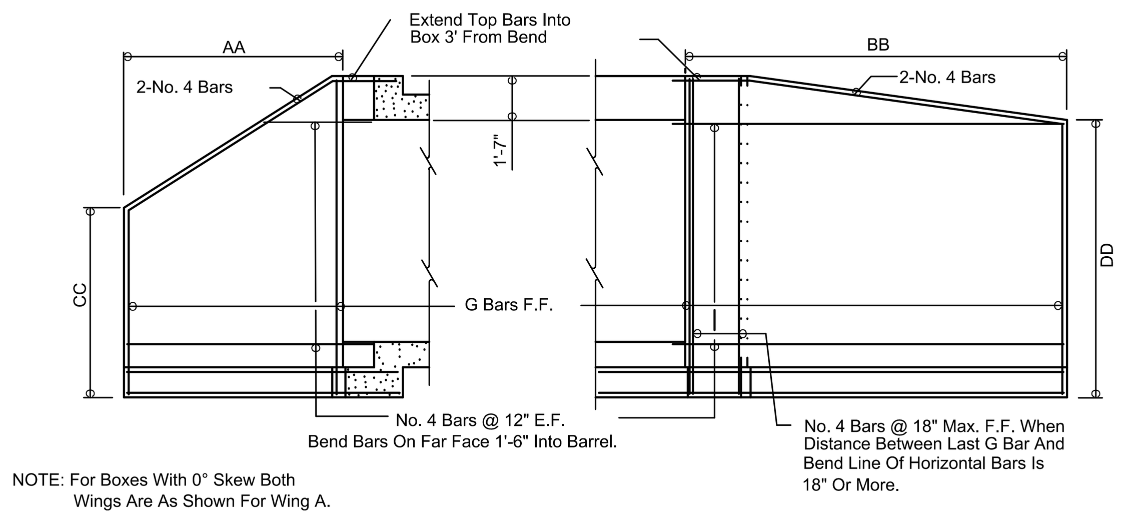

NOTE: For Boxes With 0° Skew Both Wings Are As Shown For Wing A.

SECTION WING A

SECTION WING B

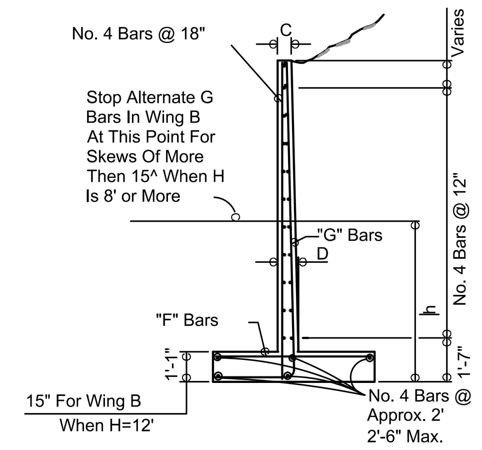

SECTION OF WINGS A AND B

TYPE I HEADWALL DIMENSIONS AND REINFORCING STEEL

△1

0° SKEW

H=Height In Feet	h= All Wings Except B For 45° Skew	AA & BB	CC & DD	C & D	E & K	F & L	G & M	J & N	Wings A&B G Bars Size	Wings A&B G Bars Spacing	Wings A&B F Bars Size	Wings A&B F Bars Spacing
3	6-7	4	4-2	8	1-4	0-10	2-1	3-4	4	12	4	12
4	7-7	5	5-8	8	1-6	1-2	2-10	3-10	4	12	4	12
5	8-7	6-2	6-2	8	1-9	1-3	3-1	4-4	4	12	4	12
6	9-7	7-2	6-8	8	1-11	1-4	3-4	4-10	4	10½	4	12
7	10-7	8-4	7-3	8	2-2	1-6	3-8	5-4	4	7	4	12
8	11-7	9-4	7-9	8	2-4	1-7	3-11	5-10	6	10½	4	11
9	12-7	10-5	8-3	9	2-6	1-8	4-2	6-4	6	9	4	9
10	13-7	11-6	8-10	10	2-9	1-9	4-5	6-10	6	7½	4	6½
12	15-7	13-7	9-11	12	3-2	2	5	7-10	7	7	5	6½

15° SKEW

H=Height In Feet	AA	BB	CC	DD	C	D	E & K	F	G	J & N	L	M	Wing A G Bars Size	Wing A G Bars Spacing	Wing A F Bars Size	Wing A F Bars Spacing	Wing B G Bars Size	Wing B G Bars Spacing	Wing B F Bars Size	Wing B F Bars Spacing	H=Height In Feet
3	3-7	4-8	4-11	5-7	8	8	1-4	1	2-6	3-4	1-2	2-10	4	12	4	12	4	12	4	12	3
4	4-6	5-11	5-4	6-2	8	8	1-6	1-1	2-8	3-10	1-3	3-1	4	12	4	12	4	12	4	12	4
5	5-6	7-2	5-9	6-9	8	8	1-9	1-2	2-11	4-4	1-4	3-5	4	12	4	12	4	10	4	12	5
6	6-5	8-5	6-3	7-4	8	8	1-11	1-3	3-2	4-10	1-6	3-8	4	12	4	12	4	6½	4	12	6
7	7-6	9-9	6-9	8	8	8	2-2	1-4	3-5	5-4	1-7	4	4	8½	4	12	6	10	4	12	7
8	8-5	11	7-2	8-7	9	9	2-4	1-5	3-7	5-10	1-8	4-4	6	12	4	12	6	8	4	9½	8
9	9-4	12-3	7-7	9-2	9	10	2-6	1-6	3-10	6-4	1-10	4-7	6	10	4	10	7	9	4	8	9
10	10-4	13-6	8-1	9-11	9	12	2-9	1-7	4-1	6-10	2	5	6	8	4	8½	7	7½	4	6	10
12	12-3	15-11	9-1	11-4	11	15	3-2	1-10	4-7	7-10	2-3	5-8	7	7½	5	6½	7	6	5	6	12

30° SKEW

H=Height In Feet	h= All Wings Except B For 45° Skew	AA	BB	CC	DD	C	D	E & K	F	G	J & N	L	M	Wing A G Bars Size	Wing A G Bars Spacing	Wing A F Bars Size	Wing A F Bars Spacing	Wing B G Bars Size	Wing B G Bars Spacing	Wing B F Bars Size	Wing B F Bars Spacing
3	6-7	3-4	5-10	4-8	6-2	8	8	1-4	0-11	2-4	3-4	1-3	3-4	4	12	4	12	4	12	4	12
4	7-7	4-3	7-5	5-2	6-11	8	8	1-6	1	2-7	3-10	1-6	3-10	4	12	4	12	4	8½	4	12
5	8-7	5-2	8-11	5-6	7-8	8	8	1-9	1-1	2-9	4-4	1-9	4-4	4	12	4	12	4	6½	4	12
6	9-7	6-1	10-6	5-11	8-4	8	8	1-11	1-2	3	4-10	1-8	4-10	4	12	4	12	6	12	4	12
7	10-7	7	12-2	6-5	9-3	9	9	2-2	1-4	3-3	5-4	1-10	5-4	4	10½	4	12	6	8½	4	10½
8	11-7	7-11	13-9	6-10	10	9	9	2-4	1-5	3-5	5-10	2-4	5-10	4	6	4	12	6	7	4	7½
9	12-7	8-10	15-3	7-3	10-9	9	12	2-6	1-6	3-8	6-4	2-6	6-4	5	7½	4	9	7	8	5	7
10	13-7	9-9	16-10	7-8	11-7	9	13	2-9	1-7	3-10	6-10	2-9	6-10	6	9	4	7½	7	6½	6	7½
12	15-7	11-6	19-11	8-7	13-3	11	16	3-2	1-9	4-4	7-10	3-2	7-10	7	9	5	7½	8	6½	6	7½

45° SKEW

H=Height In Feet	AA	BB	CC	DD	C	D	E & K & L	F	G	J & M & N	Wing B h	Wing B DD	Wing A G Bars Size	Wing A G Bars Spacing	Wing A F Bars Size	Wing A F Bars Spacing	Wing B G Bars Size	Wing B G Bars Spacing	Wing B F Bars Size	Wing B F Bars Spacing	H=Height In Feet
3	3-4	8-4	4-7	6-7	8	8	1-4	0-11	2-4	3-4	6-7	6-7	4	12	4	12	4	12	4	12	3
4	4-2	10-5	5	7-7	8	8	1-6	1	2-6	3-10	7-7	7-7	4	12	4	12	5	9½	4	12	4
5	5-1	12-7	5-5	8-7	9	9	1-9	1-1	2-9	4-4	8-7	8-7	4	12	4	12	6	9½	4	11	5
6	5-11	14-8	5-10	9-7	10	10	1-11	1-2	2-11	4-10	9-7	9-7	4	12	4	12	7	10	4	6½	6
7	6-11	17	6-3	10-7	12	12	2-2	1-3	3-2	5-4	10-7	10-7	4	10½	4	12	7	8½	5	7½	7
8	7-9	19-1	6-8	11-7	12	12	2-4	1-4	3-4	5-10	11-7	11-7	4	7	4	12	7	6½	6	8	8
9	8-7	21-2	7-1	12-7	9	14	2-6	1-5	3-7	6-4	12-7	12-7	5	8	4	10	7	6	6	7½	9
10	9-6	23 - 4	7-6	13-7	9	16	2-9	1-6	3-9	6-10	13-7	13-7	6	9½	4	7½	8	6½	8	10	10
12	11-3	27 - 7	8-6	15-9	11	20	3-2	1-8	4-2	7-10	15-9	15-9	7	9	5	7	7	8	8	8½	12

NEVADA DEPARTMENT OF TRANSPORTATION
RCB CULVERTS
TYPE I HEADWALLS
B-20.1.5.1 (502)

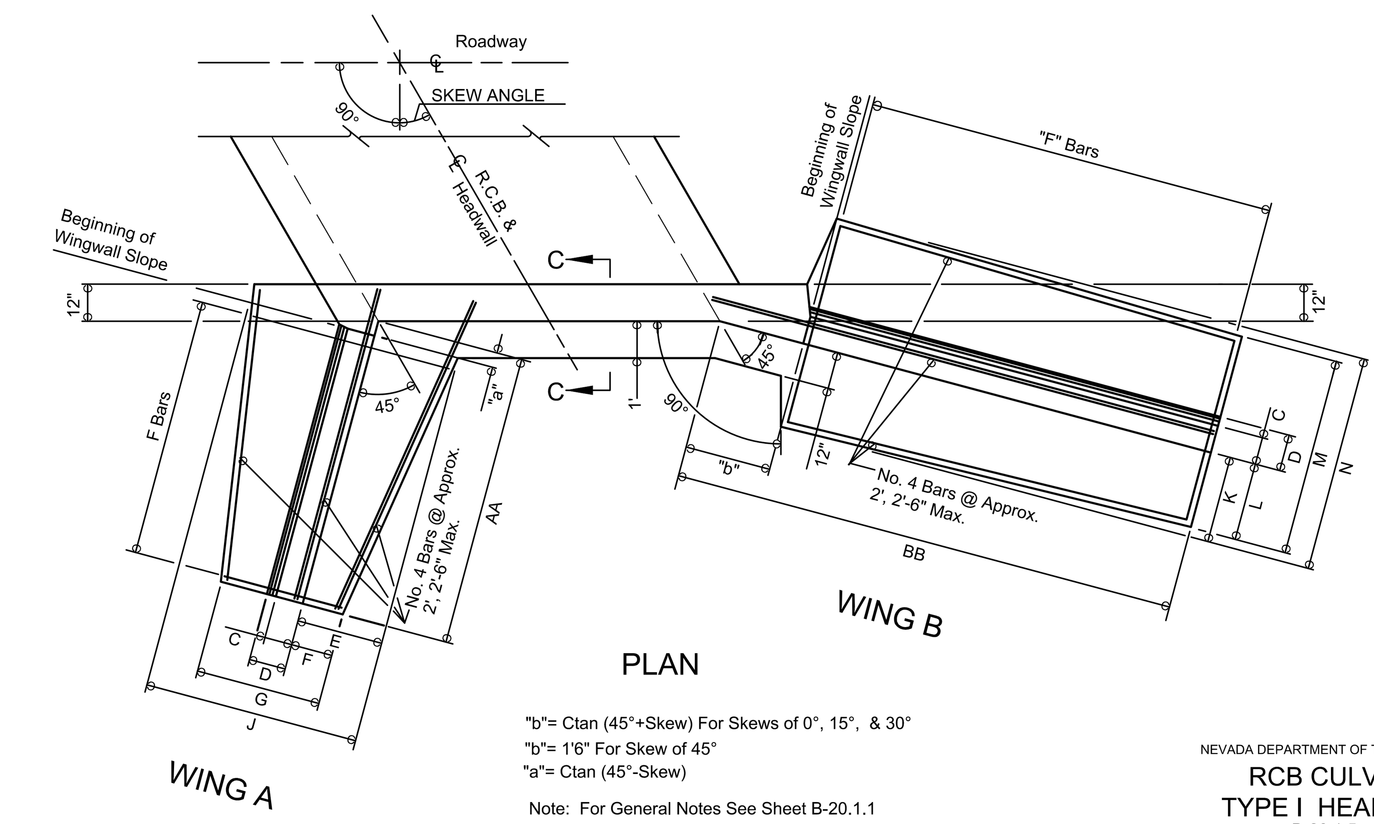

PLAN

"b"= Ctan (45°+Skew) For Skews of 0°, 15°, & 30°
"b"= 1'6" For Skew of 45°
"a"= Ctan (45°-Skew)

Note: For General Notes See Sheet B-20.1.1

NEVADA DEPARTMENT OF TRANSPORTATION
RCB CULVERTS
TYPE I HEADWALLS
B-20.1.5 (502)

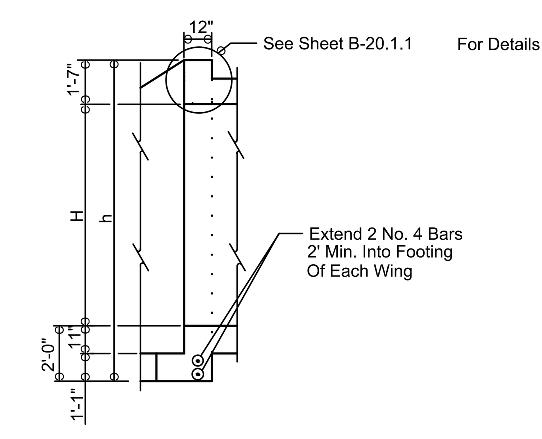

SECTION C-C

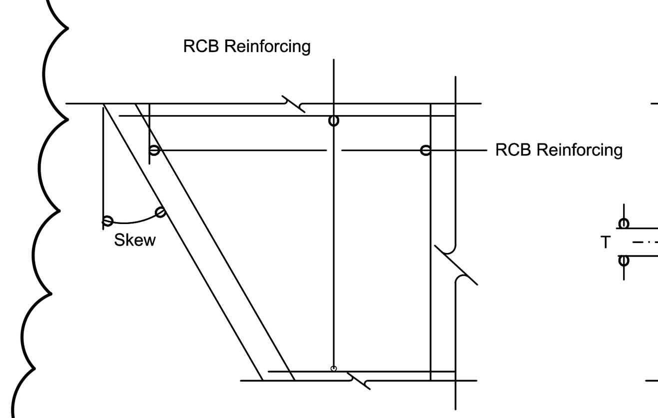

SINGLE SPAN PLAN

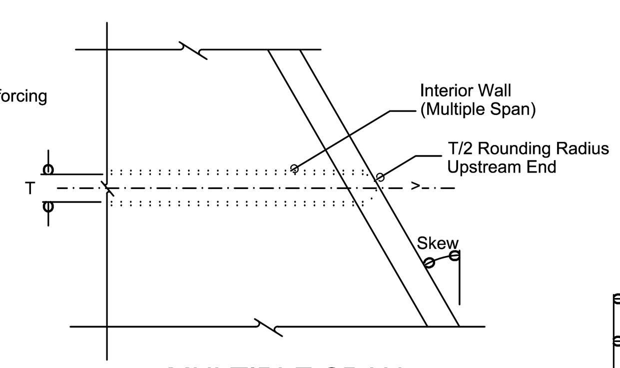

MULTIPLE SPAN PLAN

NEVADA DEPARTMENT OF TRANSPORTATION
R.C.B., CULVERTS,
GENERAL NOTES
B-20.1.1 (502,505)

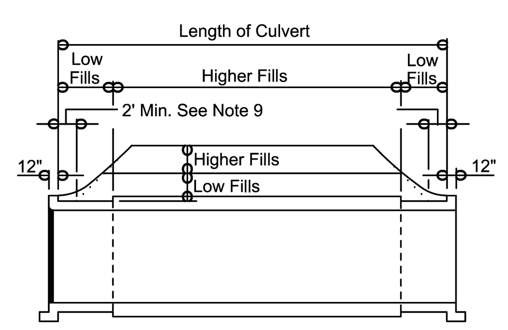

Low Fills = Lowest Table Value for, Given Span
Higher Fills = Slab Increase as Shown in Table

FILL HEIGHT TRANSITIONS

ELEVATION

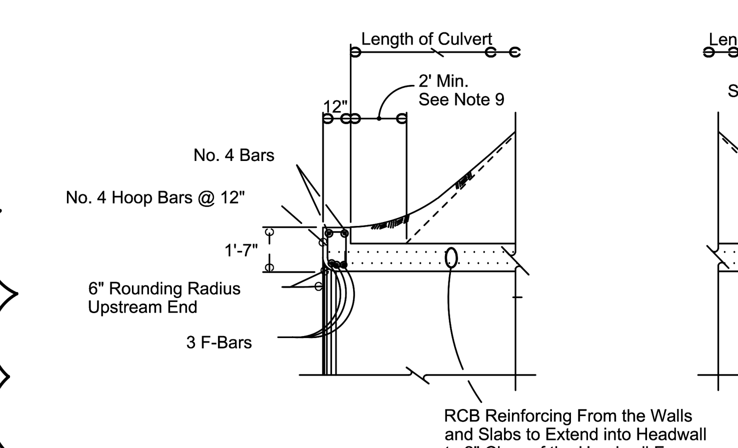

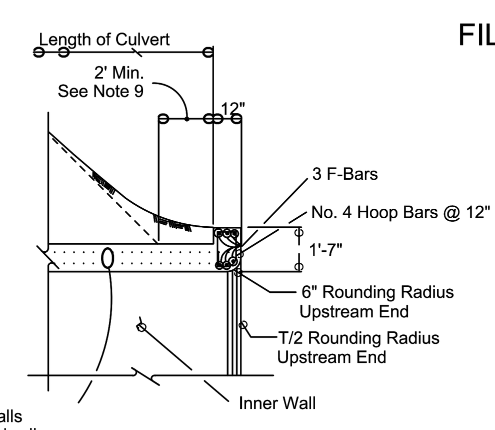

SINGLE SPAN

MULTIPLE SPAN

ELEVATION

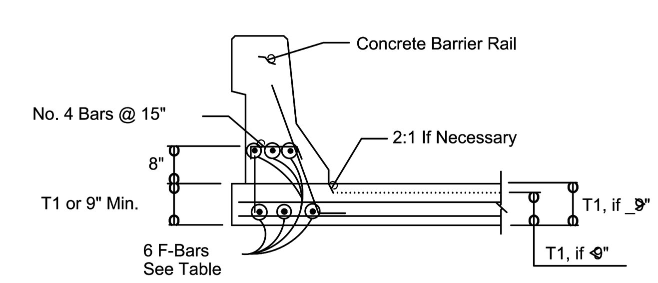

PARAPET DETAILS

COPING REINFORCING INCLUDED IN THE HEADWALL QUANTITIES

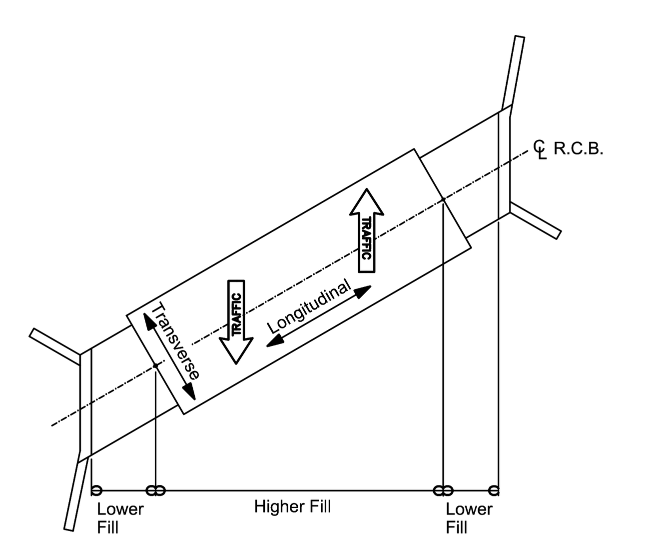

SKEWED PLAN

SKEWED PARAPETS									
SKEW ANGLE	SPAN		5	6	7	8	10	12	14
0°- 15°	F-BARS	BAR No.	4	5	5	6	7	8	8
16°- 30°	F-BARS	BAR No.	5	6	6	7	8	8	8
31°-45°	F-BARS	BAR No.	6	6	6	7	8	8	8
0°- 45°	No. 4 HOOPS		12" CTRS.						

GENERAL NOTES:

1. DESIGN SPECIFICATIONS : AASHTO "STANDARD SPECIFICATIONS FOR HIGHWAY BRIDGES, 1977, EXCEPT AS NOTED BELOW.

2. CONSTRUCTION SPECIFICATIONS: STATE OF NEVADA DEPARTMENT OF HIGHWAYS "STANDARD SPECIFICATIONS FOR ROAD AND BRIDGE CONSTRUCTION," CURRENT EDITION, AND SPECIAL PROVISIONS THERETO.

3. LOADING: LIVE LOAD: STANDARD HS20-44 OR ALTERNATE FHWA MILITARY LOADING, IMPACT FOR TOP SLAB IS 30% UP TO 3' COVER, NO IMPACT ABOVE 3' COVER. NO IMPACT FOR INVERT. NO SURCHARGE FOR WALLS.

   EARTH LOAD: EQUIVALENT FLUID PRESSURE FOR TWO CONDITIONS,
   a. 140 LBS./CU. FT. VERTICAL, 42 LBS./CU. FT. HORIZONTAL.
   b. 140 LBS./CU. FT. VERTICAL, 140 LBS./CU. FT. HORIZONTAL.
   LOAD FACTORS: 1.5D + 1.5E + 2.5 (L+I).

4. CONCRETE: THE CONCRETE SHALL HAVE A MINIMUM 28 DAY COMPRESSIVE STRENGTH OF 3,250 PSI. MAXIMUM ALLOWABLE SHEAR, Vc = 3.5 f'c, PSI. TAKEN AT A DISTANCE "d" FROM THE SUPPORTING MEMBER.

5. REINFORCING STEEL: ALL REINFORCING STEEL TO BE ASTM A615 GRADE 60. MAIN REINFORCEMENT IS TO BE PLACED IN THE TRANSVERSE DIRECTION. STAGGER SPLICES NOT SHOWN. HOOKS MAY BE ROTATED OR TILTED, AS NECESSARY, FOR CLEARANCE. REINFORCEMENT SHALL HAVE A 2" CLEARANCE ON BOTTOM OF BOTTOM SLAB AND 2" CLEARANCE ON REMAINDER OF STRUCTURE AND ITS APPURTENANCES UNLESS OTHERWISE NOTED ON THE PLANS.

6. FOUNDATION PRESSURE: THE RCB CULVERTS ARE DESIGNED TO THE FOLLOWING SOIL BEARING PRESSURES:

COVER HEIGHTS	10 FT.	20 FT.
RCB HEIGHT	TON/SQ.FT.	
6 FT.	1.0	1.6
8 FT.	1.1	1.7
10 FT.	1.2	1.8
12 FT.	1.3	1.9
14 FT.	1.4	2.0

7. SPECIAL DESIGN: CULVERTS WITH CONDITIONS, LOADING, OR SIZES DISSIMILAR TO THOSE GIVEN ON THESE RCB CULVERT SHEETS MAY REQUIRE A SPECIAL DESIGN.

8. DESIGNATION: BOX CULVERTS ARE SHOWN ON PLANS AS SPAN TIMES HEIGHT TIMES LENGTH (10' x 8' x 196' RCB).

9. ADDITIONAL LENGTH: LENGTH OF CULVERT SHALL BE INCREASED AS FOLLOWS: ADD 2' TO EACH END WHEN COVER AT SHOULDER IS 0' TO 5'. ADD AN ADDITIONAL 1' TO EACH END FOR EACH SUCCEEDING 5' OF COVER OR PORTION THEREOF.

10. HEADWALLS: ALL RCB CULVERTS SHALL HAVE TYPE I HEADWALLS UNLESS OTHERWISE NOTED ON THE PLANS.

11. QUANTITIES: QUANTITIES DO NOT INCLUDE "d" BARS, NOR SPLICES IN BARS, NOR TEMPERATURE BARS FOR EXPOSED TOP SLAB, NOR CONCRETE OR REINFORCEMENT FOR PARAPETS OR PAVING LEDGES.

11. THREE OR MORE CELLS: FOR CULVERTS WITH MORE THAN TWO CELLS, USE DIMENSIONS AND REINFORCEMENT FOR THE "DOUBLE BOX CULVERT" AND ADJUST THE QUANTITIES ACCORDINGLY.

Attention:

0 1"

If this scale bar does not measure 1" then drawing is not original scale.

NO.	DATE	ISSUE/REVISION	APP
1	11□20□13	REV. ADDED STORM STRUCTURES□DETAILS	GOA
0	11□0□13	FOR BIDDING	GOA
-	0□1□13	NOT FOR CONSTRUCTION	GOA

Designed: G. Onorato
Checked: G. Onorato
Drawn: T. Morton
Submittal Date: 11□0□2013

GEI Consultants
1□20 I Street
N.W. Suite □00
Washington, DC 2000□
202-□2□-9□10

TITANIUM METALS CORPORATION
1□1 NORTH WATER STREET
BLAC□ MOUNTAIN
INDUSTRIAL CENTER
HENDERSON, NEVADA □901□

GEI Project 13230□0

SLURRY WALL PROJECT

STORM STRUCTURE DETAILS
□2 OF 2□

DWG. NO. C1□

SHEET NO. 1□ of 1□ △1

Attachment 4

Owner Procured Equipment Specifications

Titanium Metals Corporation
P.O. Box 2128
Henderson, NV 89009
ph: 702-564-2544

www.timet.com

AIR STRIPPER SPECIFICATION

Date: November 22, 2013
Air Stripper Specification Rev 0 **TIMET RFQ #____**
Owner: TIMET – Henderson, Nevada

REQUIREMENT TO SUBMIT A BID
Vendor must be registered in the TIMET system as a supplier to supply the air stripper at TIMET's facility.

TIMET's expectation is to meet with and negotiate pricing with QED Environmental Systems (Vendor) for an EZ-Tray Model 16.4 stainless steel air stripper following submittal of a complete proposal.

DESCRIPTION:
Vender shall quote the manufacture, delivery, and off-loading of one EZ-Tray Model 16.4SS air stripper as described in this specification. This air stripper specification consists of 1) the specifications outlined within this document, 2) general electrical specifications, and 3) air stripper cut sheets provided by QED. The Vendor will also provide a quote for support during installation and commissioning of the air stripper at the site. A separate quotation will be solicited for installation of the air stripper and connection to the system piping, electrical, and controls.

TIMET CONTACTS

Project Manager / Technical
Jeff Searls
Phone: 702-564-2544x284
Fax: 702-564-1704
E-Mail: jeff.searls@timet.com

Purchasing:
Anees Shafi
Phone: 702-564-2544
Fax: 702-564-1704
E-Mail: Anees.Shafi@Timet.com

Jeff Searls will be the single technical/logistical point of contact for this project, unless contractor is otherwise notified in writing.

QUOTATION IS DUE FRIDAY, DECEMBER 6, 2013 BY 2:00 PM PST.
TIMET REQUESTS A CALL WITH VENDOR TO REVIEW BID REQUIREMENTS FORMALLY ON/BEFORE THIS DATE.

INTENT AND SCOPE OF WORK
TIMET Henderson expects, a QED EZ-Tray Model 16.4 Air Stripper, delivered and off-loaded at the site, which will conform to the following specifications for this industrial application:

AIR STRIPPER NAMEPLATE (STAMPED)	
Model	EZ-Tray Model 16.4
Class of Service	Stamp CMAA Class 'E'
Capacity	0-150 GPM
TIMET Equipment No.	TBD

Titanium Metals Corporation
P.O. Box 2128
Henderson, NV 89009
ph: 702-564-2544

www.timet.com

Purchase Order No.	TBD
PRESSURE BLOWER	
Item	**Description**
Manufacturer	New York Blower or equivalent
Motor	7.5 hp
Electrical	230/460 volt, 3-phase, TEFC
Inlet	6.625”
OD - discharge	6” flange, 150 lb. class
CONTROL PANEL	
Housing	NEMA 4X stainless steel
Control Panel Contents	Blower motor starter
	HOA switch
	Green running light
	Red low air pressure alarm light
	Circuit breakers and relays for controlling stripper and main disconnect
ELECTRICAL/CONTROLS GENERAL	
Main Disconnect	Unfused, externally operable
Electrical Enclosures	NEMA 4X, bottom conduit entry
Conduits	PVC-coated rigid galvanized steel, LFMC between motor and motor disconnect switch
Incoming Power	480V, 3 PH, 60 Hz, three-wire
Local Motor Disconnect Switches	Required, factory-installed

CONTROL REQUIREMENTS/PHILOSOPHY:
Manufacturer shall provide manufacturer’s standard control panel for the application. Control panel shall feature at a minimum:

- Internal Ethernet port, for remote monitoring of system (external Ethernet connection by Others). At a minimum, need to be able to remotely monitor on/off status for all motors, all electric instruments (i.e. level switches, differential pressure switches, etc.) and general alarm condition.
- Provide capability for remote run permissive and shut down interlock. Provide dry contact suitable for

Titanium Metals Corporation
P.O. Box 2128
Henderson, NV 89009
ph: 702-564-2544

www.timet.com

24V DC. Provide interposing relay if equipment controls operate at other than 24V DC.

- Internal transformers, power supplies, etc. for any voltages required other than 480V, 3 PH, 60 Hz.
- Control panel will be served from adjacent panelboard (by Others). Main fuse/circuit breaker not required at panel.
- Control panel shall be mounted to equipment skid and factory-wired to the greatest extent possible. If the panel needs to be removed for shipment, manufacturer shall furnish conductors and instructions for connecting skid devices to control panel. If control panel cannot be mounted to equipment skid, manufacturer shall indicate so in proposal.

DRAWINGS AND DOCUMENTATION TO BE SUBMITTED:
Shop drawings are to be submitted to Jeff Searls, in the TIMET Engineering Department, for review and acceptance. Provide recommended spare parts list for inclusion in order of air stripper. Any changes from the current design of the air stripper must have a submittal drawing or revision of the existing drawings, engineering calculations, and must be approved by TIMET. Upon delivery of the equipment, provide four (4) complete Operation and Maintenance manuals including information regarding of all the parts, materials, and drawings including electrical schematics. AutoCad drawings are to be provided in version 2009 or earlier as single files (with no external references). ALL drawings will be the property of TIMET and may not be used for any other purpose than this project without prior written approval from TIMET.

AIR STRIPPER DELIVERY, INSTALLATION and COMISSIONING:
Coordinate schedule with TIMET and general contractor for delivery, installation, and commissioning of the air stripper.

General contractor will install air stripper and complete electrical connections to electrical feed and primary PLC. A QED technical representative is requested to be on site during installation and commissioning of the air stripper.

SITE DATA
The equipment is to be installed outdoors at the TIMET facility in Henderson, Nevada. Site elevation is approximately 1,800 ft. above mean sea level and the ambient temperature is 30 degrees to 130 degrees F.

IMPORTANT SAFETY NOTE
All successful vendor personnel must attend a safety orientation session conducted by TIMET. All Vendor personnel are expected to abide by TIMET plant safety rules.

FINAL ACCEPTANCE AND GUARANTEE
Upon full completion of the equipment installation, commissioning, and owner acceptance, the successful Vendor shall provide warranty and guarantee the adequacy of the air stripper to meet requirements as described in this specification and the Vendor's published equipment specifications.

Titanium Metals Corporation
P.O. Box 2128
Henderson, NV 89009
ph: 702-564-2544

www.timet.com

BID ITEM BREAKDOWN

Vendor to provide and break-down the bid quotation to the level desired by TIMET. Vendor also to provide estimated delivery schedule (calendar weeks from receipt of order), and recommended spare parts list. At a minimum, the quote shall identify labor, materials, equipment, and freight.

REFERENCE ATTACHMENTS

1) Specification Section 13440, “General Provisions for Instrumentation and Controls”
2) Specification Section 13442, “Instrument and Control Panel Construction”
3) Specification Section 13443, “Panel and Field Devices”
4) QED Model 16.4SS Cut Sheets

SECTION 13440

GENERAL PROVISIONS FOR INSTRUMENTATION AND CONTROLS

PART 1 GENERAL

1.01 SUMMARY

A. Section Includes:

1. General requirements for package and non-package Instrumentation and Control Systems unless otherwise specified in other sections.

1.02 DEFINITIONS

A. Selector Switch: When used under panel component description refers to maintained contact type switches. Loss and return of control power to circuit does not change control mode of requirements in switch position.

B. Push-button: When used under panel component description refers to momentary contact type switches which, unless specified otherwise, shall require electrical interlock. Loss of control power shall, unless specified otherwise, result in loss of electrical interlock and stoppage of previous mode of operations.

1.03 SYSTEM DESCRIPTION

A. Design Requirements:

1. Provide run/fail, alarm, and equipment status functions.

2. Unless otherwise specified, "run" signals shall be derived from motor starter normally open auxiliary contacts.

3. Unless otherwise specified, discrete input and output signals shall conform to:

   a. Isolated unpowered (dry) contact closures.
   b. Power contact from panel receiving signal or device receiving signal.

4. Unless otherwise specified, input and output analog signals shall conform to:

   a. 4-20 mAdc.
   b. For 2-wire transmitter, provide isolated type and power with 24 or 48 vdc at panel or device receiving signal.
   c. Where isolation is required to interface with particular equipment furnished, provide necessary I/I converters.

5. For PLC based systems manual control devices, in panel or field, shall be independent from PLC to provide maintenance and redundancy function.

6. Panels, panel devices, and field devices shall meet or exceed NEMA requirements as follows.

© GEI 2013

a. NEMA 4X: Wet locations or outdoors.

1) Instrumentation and control panels shall be 316 stainless steel (NEMA 4X).
2) Instruments and device enclosures shall be 316 stainless steel, fiberglass, or ABS plastic (NEMA 4X).

7. Design Life: Design control system for min. 10 yr life at following temperatures:

a. Permit continuous operation with panel external ambient temperatures of up to +40°C (+104°F).
b. Outdoor Panels: Permit operation with panel external ambient temperatures of down to -29°C (-20°F).
c. Indoor Panels: Permit operation with panel external ambient temperatures of down to +8°C (+40°F).

8. When motor controller disconnecting means is off, deenergize associated equipment devices powered from panel.

9. Electrical wiring and controls shall conform to Division 16.

B. Identify equipment on panel or screens with indication below:

1. Red Light On: Equipment running.
2. White Light On: Equipment failure when called to run, but not running due to power failure, overload, breaker, disconnect, or remote switch call for equipment to stop.

a. Provide parallel "required" contact wired to panel for items such as pumps and valves.
b. Provide necessary relay logic and adjustable timers to sense discrepancy between "required" and "running" and activate respective "Run" and "Fail" light from these signals. Provide horn when specified.

3. Amber Light On: Indicate equipment status such as valve open or closed.
4. Green Light On: Equipment off.

1.04 SUBMITTALS

A. General:

1. Submit following information tabulated in booklet form for each piece of equipment or system furnished under this section.
2. Table of Contents of Submittals: Include for each booklet when more than 1 item of equipment is included in submittal:

a. ENGINEER'S instrument tag number.
b. Instrument manufacturer's model number.
c. Related piping, electrical, and dimension drawings.

B. Product Data:

1. Construction materials.
2. Ranges.
3. Output/Input signals.

© GEI 2013

4. Accessories.
5. Mounting location.
6. ENGINEER'S tag number on manufacturer's specifications sheets.
7. Interconnect reference for associated field and panel instruments.
8. Component specification sheets.

C. Shop Drawings:

1. Panel fabrication and dimension drawings, nameplate legends, ENGINEER'S tag numbers, and wiring and piping schematic drawings. Project specific drawings are required for each panel, typical are not acceptable.
2. Equipment dimension drawings.
3. Equipment terminal and piping connections.
4. Loop-by-loop system electrical schematic showing terminal-to-terminal interconnections between related panel and field instruments.
5. Front of panel layout.
6. PLC I/O module connection diagram for PLC based systems.
7. Ladder/logic system electrical schematic showing wiring of each component, including ranges and set points. Wiring and ladder diagram shall have reference numbers on every line for cross referencing. Each device on ladder shall be cross-referenced with line number as to wherever it is located.
8. Terminal to terminal interconnection drawings showing wiring for panel to panel/MCC and panel to field equipment.

D. Miscellaneous:

1. Certificate of UL or nationally recognized testing laboratory (NRTL) inspection and approval for each completely assembled panel prior to shipment to Project.
2. Include ENGINEER'S tag number when available on each submittal document or page wherever specific component appears.
3. Extra materials list.

E. Operation and Maintenance (O&M) Data:

1. Include O&M data for each panel and field device installed:

a. PLC ladder logic software (electronic and printed) including tags, comments, operational database values and passwords or pass codes.
b. Configured software on electronic media to install program on spare PLC processors and programmable controller.
c. Bill of materials.
d. Instruction Manual: Includes detailed operating sequence descriptions.
e. Maintenance Manual: Instructions for maintaining equipment to include calibrating, cleaning, and trouble shooting.
f. Front and rear panel layout drawings.
g. Name plate data.

1.05 QUALITY ASSURANCE

A. Standardization:

1. Drawings and Specifications are intended to provide overall system functions. Provide equipment necessary to provide complete and operable system.
2. CONTRACTOR is responsible for costs resulting from deviations from Contract Documents.

© GEI 2013

B. Items provided under sections referenced to this section shall be listed or labeled by UL or other Nationally Recognized Testing Laboratory (NRTL).

1. Term "NRTL" shall be as defined in OSHA Regulation 1910.7.
2. Terms "listed" and "labeled" shall be as defined in National Electrical Code, Article 100.

C. Regulatory Requirements:

1. National Electrical Code (NEC): Components and installation shall comply with National Fire Protection Association (NFPA) 70.

PART 2 PRODUCTS

2.01 Furnish equipment markers with ENGINEER'S equipment name and tag number.

2.02 No aluminum components shall be used in instrumentation and control equipment.

2.02 SOURCE QUALITY CONTROL

A. Perform UL inspection and certification for each completely assembled panel before shipment to Project site.

PART 3 EXECUTION

3.01 INSTALLATION

A. Install equipment in locations indicated on Drawings and in accordance with manufacturer's written instructions and approved submittals.

END OF SECTION

© GEI 2013

SECTION 13442

INSTRUMENT AND CONTROL PANEL CONSTRUCTION

PART 1 GENERAL

1.01 SUMMARY

A. Comply with Section 13440.

1.02 SUBMITTALS

A. Shop Drawings:

1. Wiring and wiring identification.
2. Terminal identification.

B. Submit in accordance with Section 01300.

1.03 MAINTENANCE

A. Extra Materials:

1. 5 fuses or 10%, whichever is greater, for each type of fuse.
2. 30% spare unwired terminals; to be shown on panel drawings.
3. 5 lamps or 10%, whichever is greater, for each type of lamp.
4. One intrinsically safe relay and intrinsically safe barrier for each type.
5. One control relay for each type.
6. One lightning and surge protection module for each type.
7. Spare PLC I/O points wired to terminal blocks.

B. Panel Space:

1. Include 10% contiguous usable rear of panel area for future components.

PART 2 PRODUCTS

2.01 CONTROL PANELS

A. Factory-fabricate, install instruments, plumb and wire.

B. Make external connections by way of numbered terminal blocks.

C. Separate electrical components from pneumatic components by metal barriers.

D. Conform to ISA standards.

E. Construct panels to external dimensions as specified, required, or shown. Component arrangement and wiring shall be consistent for like panels.

F. Fabrication:

© GEI 2013

1. Minimum Metal Thickness: 14 ga.

    a. Construct panels so no seams or bolt heads visible when viewed from front.
    b. Panel cutouts for instruments and other devices, such as lights and switches, shall be cut, punched or drilled, and smoothly finished with rounded edges.

2. Wherever practical, enclosures shall be manufacturer's standard product.
3. Size to adequately dissipate heat generated by equipment mounted in or on panel.
4. Equip panels mounted outside buildings with thermostatically controlled space heaters capable of maintaining internal temperature of 10°C, ±2°C, with 20 mph wind at ambient temperature of -30°C. Heaters shall operate on 120 vac, 60 Hz power.
5. Install rear of panel devices on subpanel.

G. Doors:

1. Provide front doors except on graphic sections and where otherwise specified.
2. Full height, fully gasketed access doors.
3. Provide with 3-point padlock locking latches.
4. Provide full length, continuous, piano type stainless steel hinges and pins.

H. Service Outlets:

1. Provide 20 amp, 120 v service outlet circuit fused at 5 amps within back-of-panel area. Fuse separate from control power.

I. Temperature Control:

1. For NEMA 4X Applications:

    a. Provide thermostatically controlled heat exchanger and circulation fans as required to limit internal temperature buildup within sealed enclosure. Internal panel temperature shall not exceed lowest or highest temperature rating of internal components.
    b. Heat exchanger shall be of air to air heat pipe type:

        1) Manufacturer: Noren Products Inc.
        2) Components located outside of control center enclosure shall be suitable for outdoor installation.
        3) Fans shall be waterproof and installed in a stainless steel or anodized aluminum enclosure.

    c. Install heat exchanger so that NEMA rating of enclosure is not compromised.
    d. For outdoor application sunshields and air conditioners may be used to limit internal panel temperature.

J. Fusing:

1. Maximum Fuse Size: 5 amp.
2. Group instruments after separate fusing with maximum of 10 instruments/fuse.
3. Fuse power supplies individually.
4. Where 5 amp capacity is exceeded by load requirements, provide additional fuses.
5. For field devices powered by panel, provide separate fuse for each output.

K. Wiring Terminals:

© GEI 2013

1. Mount and wire panel instruments and components to terminal blocks within panel so installation shall require only setting panel in place and making connections to field wiring and utilities.
2. Provide separately mounted terminal blocks in panel for connection of field wiring to panel.
3. Label with respective loop number as designated on Panel Ladder Logic Drawings or Loop Diagrams.

L. Intrinsically Safe Components:

1. Provide intrinsically safe shunt barriers and relays as necessary when field components are located in Class I Division 1 or Division 2 hazardous class field locations.

M. Lightning and Surge Protection:

1. Provide on instrumentation and control signals whose source or destination is outside building.
2. Provide on phone lines and copper data network connections located outside building.
3. Provide on 120 vac power feeds.

N. Wiring Identification:

1. Label panel wiring at each end of conductor with wire number as designated on Panel Ladder Logic Drawings or Loop Diagrams.
2. Labels shall be heat shrinkable vinyl sleeve with permanent embossed letters. Emboss label characters on single sleeve. Heat shrink sleeves on conductors at terminal ends.
3. Conductors Color Codes:

   a. 120 vac power wiring, line (phase "A"): Black.
   b. 120 vac power wiring, neutral/common: White.
   c. 120 vac power wiring, ground: Green.
   d. 120 vac control wiring, internal power source: Red.
   e. 120 vac control wiring, external power source: Yellow.
   f. 24 vdc control wiring, internal or external power source: Light Blue.
   g. 4-20 mAdc signal wiring, positive lead: Black.
   h. 4-20 mAdc signal wiring, negative lead: White or Red.
   i. Data highway cable, signal leads: Manufacturer's standard.

O. Panel Drawing Data Pocket:

1. Mount inside without penetrating panel.
2. Size for holding wiring diagrams.
3. Construct from thermal plastic or metal.
4. Include wiring diagrams.

P. Three Phase and Motor Control Panel:

1. Through door main disconnect or circuit breaker.
2. Control transformer with primary and secondary fuses or circuit breakers.

© GEI 2013

2.02 ADDITIONAL REQUIREMENTS FOR FREE-STANDING PANEL CONSTRUCTION

A. Fabrication:

1. Fabricate each panel from sheet steel with 1 piece, 10 ga steel front and 12 ga steel sides, back, and top.
2. Provide steel angle stiffeners on back of panel face to prevent panel deflection under instrument loading or operation.
3. Provide internal structural steel framework for instrument support and panel bracing. Internal framework shall permit lifting of panel without racking or distortion.
4. Provide removable lifting rings designed to facilitate rigging and lifting of panel during installation. Provide plugs to fill lifting ring holes after installation to complete and lifting rings have been removed.
5. Where 2 or more sections of panel are mounted adjacent to one another, bolt together with front faces parallel.

B. Doors:

1. Rear access doors shall extend no further than 24 in. beyond panel when opened to 90° position.
2. For panels with no front doors or rear access, provide 36 in. deep panel with side access doors on each side.

C. Lights:

1. Provide separately fused and switched 100 watt incandescent or equivalent cold start fluorescent back-of-panel lights.
2. Provide one light for every 4 ft or less of panel width.
3. Mount inside and in top of back-of-panel area.

D. Service Outlets:

1. Space evenly along back of panel.

a. Panels 4 ft or less: 1 outlet.
b. Panels greater than 4 ft: 2 outlets.
c. Panels greater than 8 ft: 3 outlets.
d. Panels greater than 12 ft: 4 outlets.

E. Instrument Location:

1. Locate instruments designated for back of panel mounting to allow for maintenance and adjustment.
2. Front of panel instrument mounting height shall not exceed 6 ft 6 in., minimum height shall be 4 ft-0 in.

2.03 PANEL FINISH

A. Panels shall be NEMA 4X stainless steel.

2.04 NAMEPLATES

A. Provide nameplates for I&C panels and each front-of-panel instrument and device with designations as shown on Drawings and as listed in Specifications.

© GEI 2013

B. Panel Designation: Engraved with ENGINEER'S panel tag number and description with 1/2 in. high characters.

C. Application/Function Nameplate: Locate 3/16 in. characters above or near panel mounted instrument or device consisting of descriptive phrase using nomenclature as listed in Specifications (when available).

D. Laminated white plastic inscribed with black characters.

E. Tag Number: Include ENGINEER'S tag number as shown on P&ID's and in Specifications on each nameplate.

F. Provide aluminum decal with black 3/16 in. characters identifying tag number or device designation. Locate decal on instrument or device or above instrument or device on panel.

G. Secure front-of-panel and front-of-instrument nameplate with drive screws or self-tapping fasteners.

2.05 SOURCE QUALITY CONTROL

A. Test wiring and plumbing prior to shipment.

1. Test internal wiring and components to ensure panel is operational prior to shipment.
2. When panels are interwired, interconnect panels at factory and test functionality of system.
3. Simulate field component and instrument inputs at panel terminals. Test panel outputs with suitable test instruments.
4. Pressure test internal piping system and components for leaks and repair before shipping.

PART 3 EXECUTION

3.01 INSTALLATION

A. Install panels in locations indicated on Drawings and in accordance with manufacturer's written instructions and approved submittals.

B. Coordinate design and installation of equipment control panels with primary system PLC for timing and functionality of the system.

END OF SECTION

© GEI 2013

SECTION 13453

PANEL AND FIELD DEVICES

PART 1 GENERAL

1.01 SUMMARY

A. Comply with Section 13440.

PART 2 PRODUCTS

2.01 PUSH-BUTTON/SELECTOR SWITCH CONTROL UNITS AND PILOT LIGHTS

A. Manufacturers:

1. Square D.
2. Cutler-Hammer.
3. Allen Bradley.
4. Or approved equal.

B. Construction:

1. Heavy duty.
2. Oil tight, watertight.
3. Base mounting.
4. Flush panel mounting.
5. Size to mount in 30.5 mm opening without adapter. Smaller units are not acceptable.

C. Pushbuttons:

1. Flush head unless specified elsewhere.
2. Contact Blocks:

a. Double break silver contacts.
b. ac Ratings: 7,200 va make, 720 va break.
c. Single pole, double throw or double pole, single throw.
d. Up to 6 tandem blocks.

3. Momentary contact unless specified elsewhere.
4. Non-illuminated.
5. Padlock attachments where required.
6. Legend plates as required for type of operation or as specified elsewhere.

D. Remote Lock-out:

1. Jumbo red mushroom head.
2. Contact Blocks:

a. Double break silver contacts.
b. ac Ratings: 7,200 va make, 720 va break.

© GEI 2013

c. Single pole, double throw or double pole, single throw.
d. Up to 2 tandem blocks.

3. Push/Pull.
4. Maintained contact.
5. Non-illuminated.
6. Padlock attachments constructed of metal. Plastic material is not acceptable.
7. Legend Plates:

a. Extra large.
b. Red.
c. Emergency.

E. Selector Switches:

1. Maintained position unless specified elsewhere.
2. Contact Blocks:

a. Double break silver contacts.
b. ac Ratings: 7,200 va make, 720 va break.
c. Single pole, double throw or double pole, single throw.
d. Up to 6 tandem blocks.

3. Operators:

a. Number of positions as specified elsewhere.
b. Standard knob type unless specified elsewhere.

4. Legend plates as required for type of operation or specified elsewhere.

F. Pilot Lights:

1. Transformer type.
2. Bayonet, 6 to 8 v bulb.
3. Colored lenses as specified elsewhere.
4. Interchangeable lenses.
5. Transformer rated for 120 v, 60 Hz.
6. Push to test.
7. Legend plates as required for type of operation or specified elsewhere.

G. Nameplates:

1. General.

a. Engraved laminated plastic.
b. Letters 3/16 in. high.
c. Black letters on white background.
d. Identify per equipment controlled.

© GEI 2013

2.02 MOTOR STARTER CONTROL RELAYS

A. Manufacturers:

1. Square D.
2. Cutler-Hammer.
3. Or approved equal.

B. Construction:

1. Industrial type.
2. 600 v rated.
3. ac operation.
4. Pressure wire connectors.

C. Operating Data:

1. Pickup Time: 11 ms maximum.
2. Dropout Time: 6 ms maximum.

D. Coil:

1. Molded construction.
2. 120 vac, 60 Hz or 24 vdc
3. Continuous rated.
4. 155 va inrush, maximum.
5. 22 va sealed, maximum.
6. Suppress coil transients to 300 v or less.

E. Contacts:

1. Double break.
2. Silver alloy.
3. Convertible.
4. Color coded to indicate status.
5. Pilot duty.

F. Track mounting capability.

G. Accessories:

1. Add-on pole attachment.

   a. 4 NO and 4 NC contacts.
   b. Add-on to 0 to 4-pole relay.

2. Latch attachment.

2.03 GENERAL PURPOSE CONTROL RELAYS

A. Manufacturers:

1. Potter and Brumfield, KU Series.
2. Struthers Dunn.

© GEI 2013

3. Or approved equal.

B. Operating Data:

1. Pickup Time: 13 ms maximum.
2. Dropout Time: 10 ms maximum.
3. Operating Temperature: -45°C to 70°C.

C. ac Coil:

1. 120 or 240 vac.
2. Continuous rated.
3. 3.5 va inrush.
4. 1.2 va sealed.
5. 50 to 60 Hz.
6. Minimum Dropout Voltage: 10% of coil rated voltage.

D. dc Coil:

1. 24 or 120 vdc.
2. Continuous rated.
3. Minimum Coil Resistance:

a. 24 vdc: 450 ohm.
b. 100 vdc: 9,000 ohm.

E. Contacts:

1. Silver cadmium oxide.
2. Gold flashed fine silver, gold diffused for 1 amp or less resistive loads.
3. 4 Form C.
4. 120 vac.
5. 10 amp make, 15 amp break, (inductive).

F. Rated at 10 million operations.

G. Plug-in sockets.

H. Enclosed and protected by polycarbonate cover.

I. Provide relay retaining clips.

2.04 FLOAT SWITCHES

A. Manufacturers:

1. Consolidated 9GEF.
2. Anchor Scientific GP.
3. Or approved equal.

B. Float: 316 stainless steel.

C. Provide sufficient length of nitrile PVC jacketed cable.

D. Mounting Hardware: 316 stainless steel.

© GEI 2013

E. Switch: Non-Mercury tilt type switch with minimum rating of 10 million cycles.

2.05 TERMINAL BLOCKS FOR CONTROL WIRING

A. Manufacturers:

1. Allen Bradley, Bulletin 1492.
2. Phoenix Contact. UK-5N.

B. General:

1. 600 v rating.
2. Marker labels on each terminal.
3. Clip-mount on DIN rails.
4. Insulating end caps to support each terminal block assembly.
5. Touchsafe terminal block and accessories.
6. Connection: Captive screw and pressure plate. Connection shall not cause deformation of wire.
7. Contact material and surface: Nickel or tin plated copper alloy. Do not use ferrous metals.

C. Switched Knife Disconnect (when specified):

1. Non-fused.
2. Single-pull, single throw (SPST).
3. Hinged disconnect lever.

D. Fused Indicating (when specified):

1. LED blown fuse indicating light.
2. Hinged disconnect lever.
3. Size fuse for load.
4. 15 amp capacity fuse holder.

2.06 EXTERIOR MOUNTED ALARM LIGHT

A. Manufacturers:

1. Crouse Hinds, Model VXHF25GP.
2. Or approved equal.

B. Power: 120 vac, 150w.

C. Incandescent, vapor tight enclosed and gasketed.

D. Suitable for use in wet location.

E. Aluminum body.

F. Shatter-proof glass globe with aluminum guard, red unless otherwise specified.

G. 3/4 in. conduit connection.

© GEI 2013

PART 3 EXECUTION

3.01 INSTALLATION

A. Install in accordance with manufacturer's written instructions, local codes, applicable requirements of NEC, NECA "Standard of Installation," and recognized industry practices.

B. Control Relays:

1. Provide control relays for general purpose logic circuits.
2. Provide motor starter control relays when load exceeds rating of general purpose control relays.

END OF SECTION

© GEI 2013

THE INFORMATION CONTAINED IN THIS DRAWING IS THE SOLE PROPERTY OF Q.E.D. ENVIRONMENTAL ANY REPRODUCTION IN PART OR WHOLE WITHOUT THE WRITTEN PERMISSION OF Q.E.D. ENVIRONMENTAL IS PROHIBITED.

REVISIONS					
REV.	DESCRIPTION	ECO #	DRAWN BY	CHECKED BY	DATE

Not For Construction

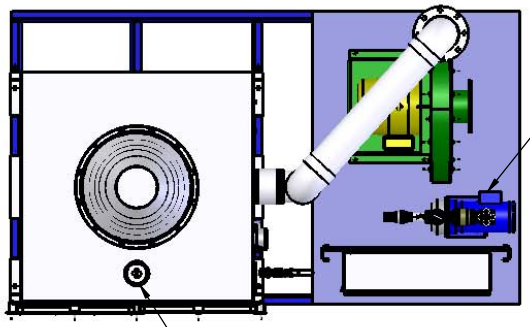

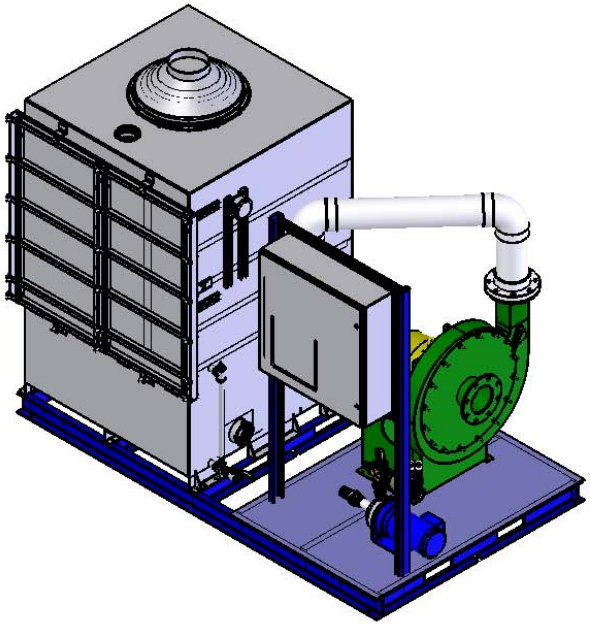

Not for Production

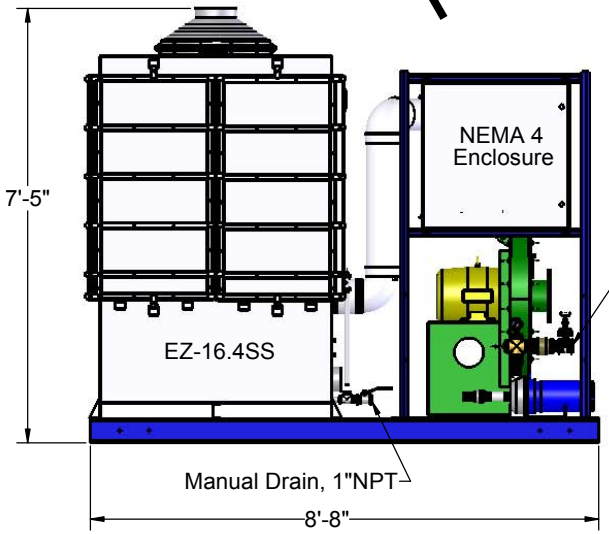

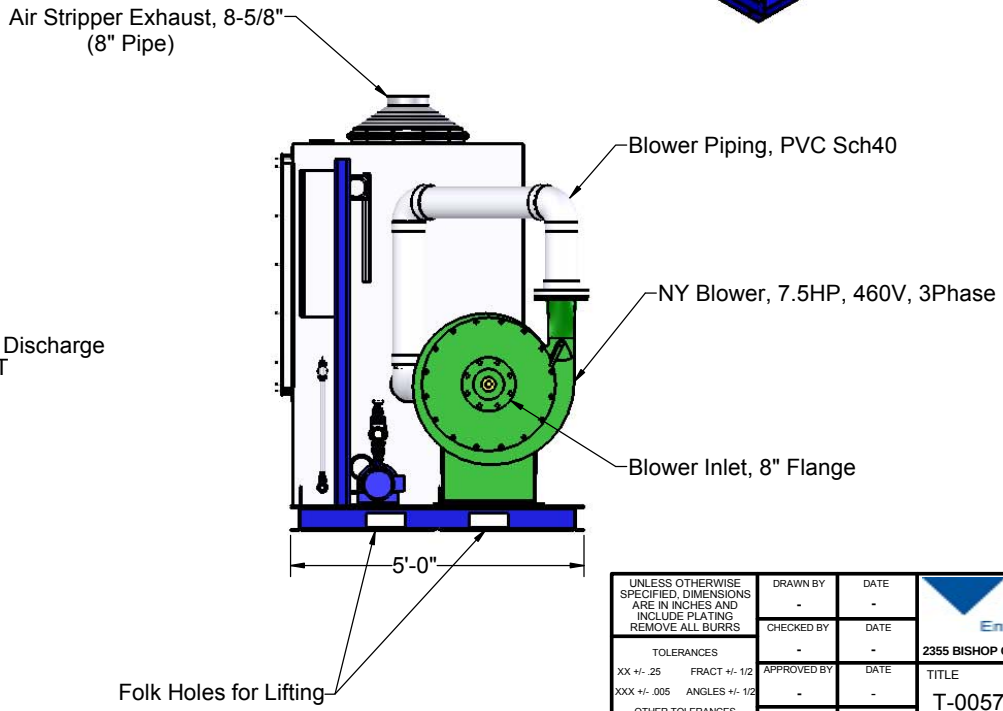

UNLESS OTHERWISE SPECIFIED, DIMENSIONS ARE IN INCHES AND INCLUDE PLATING REMOVE ALL BURRS	DRAWN BY -	DATE -	QED Environmental Systems
TOLERANCES	CHECKED BY -	DATE -	2355 BISHOP CIRCLE W, DEXTER, MI. 48130
XX +/- .25 FRACT +/- 1/2	APPROVED BY -	DATE -	TITLE
XXX +/- .005 ANGLES +/- 1/2			T-00573
OTHER TOLERANCES AS SPECIFIED			
NEXT ASSY -	MATERIAL -		DWG. NO. SKID LAYOUT 16.4SS PANE
USED ON -	FINISH -		SCALE 1:24 SHEET 1 OF 1

Titanium Metals Corporation
P.O. Box 2128
Henderson, NV 89009
ph: 702-564-2544

www.timet.com

EXTRACTION PUMP SPECIFICATION

Date: November 22, 2013
Air Stripper Specification Rev 0 **TIMET RFQ #____**
Owner: TIMET – Henderson, Nevada

REQUIREMENT TO SUBMIT A BID
Vendor must be a registered supplier in the TIMET system as a minimum requirement to supply the groundwater extraction pumps and control panels for the Henderson groundwater project.

TIMET's expectation is to meet with and negotiate pricing with EPG Companies, Inc. (Vendor) for twenty-two (22) TSPPT Model 2-3 groundwater extraction pumps with control panels.

DESCRIPTION:
Vender shall quote the manufacture, delivery, and off-loading of twenty-two (22) TSPPT Model 2-3 groundwater extraction pumps as described in this specification. Nineteen of the pumps will be installed for the project, along with three spare pumps and control panels. This extraction pump specification consists of 1) the specifications outlined within this document, 2) general electrical specifications, and 3) pump data sheets provided by EPG. The Vendor will also provide a quote for support during installation and commissioning of the pumps and control panels at the site. A separate quotation will be solicited for installation of the pumps and connection to the system piping, electrical, and controls.

TIMET CONTACTS

Project Manager / Technical
Jeff Searls
Phone: 702-564-2544x284
Fax: 702-564-1704
E-Mail: jeff.searls@timet.com

Purchasing:
Anees Shafi
Phone: 702-564-2544
Fax: 702-564-1704
E-Mail: Anees.Shafi@Timet.com

Jeff Searls will be the single technical/logistical point of contact for this project, unless contractor is otherwise notified in writing.

QUOTATION IS DUE FRIDAY, DECEMBER 6, 2013, BY 2:00 PM PST.
TIMET REQUESTS A CALL WITH VENDOR TO REVIEW BID REQUIREMENTS FORMALLY ON/BEFORE THIS DATE.

INTENT AND SCOPE OF WORK
TIMET Henderson expects, twenty-two (22) TSPPT Model 2-3 groundwater extraction pumps, delivered and off-loaded at the site, which will meet the specifications for this industrial application:

PUMP NAMEPLATE (STAMPED)	
Model	TSPPT 2-3
Capacity	0-12 GPM

Titanium Metals Corporation
P.O. Box 2128
Henderson, NV 89009
ph: 702-564-2544

www.timet.com

TIMET Equipment No.	TBD
Purchase Order No.	TBD
PUMPS	
Item	**Description**
Manufacturer	EPG Companies, Inc.
Motor	0.5 hp
Electrical	230 volt, 1-phase
Discharge Port	1 ¼" NPT
Discharge Hose	Flexible hose, 7 @ 45 feet 15 @ 65 feet
Motor Lead	7 @ 45 feet 15 @ 65 feet
1/8" SS Lifting Cable	7 @ 45 feet 15 @ 65 feet
CONTROL PANEL	
Housing	NEMA 4X stainless steel
Control Panel Contents	Motor starter
	Water level readout
	Pump run indicator light
	Pump run timer
	Pump cycle counter
	Circuit breakers and relays for controlling pump and main disconnect
ELECTRICAL/CONTROLS GENERAL	
Main Disconnect	Unfused, externally operable, and lockable
Electrical Enclosures	NEMA 4X, bottom conduit entry
Conduits	PVC-coated rigid galvanized steel, LFMC between motor and motor disconnect switch
Incoming Power	230V, 1 PH, 60 Hz, three-wire

Titanium Metals Corporation
P.O. Box 2128
Henderson, NV 89009
ph: 702-564-2544

www.timet.com

Local Motor Disconnect Switches	Required, factory-installed

CONTROL REQUIREMENTS/PHILOSOPHY:
Manufacturer shall provide manufacturer's standard control panel for the application. Control panel shall feature at a minimum:

- Level meter readout from pressure transducer in well.
- Pump run timer
- Pump cycle counter
- Terminals for connection to lift station control panel for shut down.

DRAWINGS AND DOCUMENTATION TO BE SUBMITTED:
Shop drawings are to be submitted to Jeff Searls, in the TIMET Engineering Department, for review and acceptance. Any changes from the current design of the extraction well pumps must have a submittal drawing or revision of the existing drawings, engineering calculations, and must be approved by TIMET. Upon delivery of the equipment to the site, provide four complete Operation and Maintenance manuals regarding all the parts, materials, and drawings including electrical schematics. AutoCad drawings are to be provided in version 2009 or earlier as single files (with no external references). ALL drawings will be the property of TIMET and may not be used for any other purpose than this project without prior written approval from TIMET.

PUMP AND EQUIPMENT DELIVERY, INSTALLATION and COMISSIONING:
Coordinate schedule with TIMET and general contractor for delivery, installation, and commissioning of the extraction well pumps and control panels.

General contractor will install the pumps and control panels and complete piping and electrical/I&C connections to extraction system. An EPG technical representative is requested to be on site during installation and commissioning of the pumps and control panel.

SITE DATA
The equipment is to be installed outdoors at the TIMET facility in Henderson, Nevada. Site elevation is approximately 1,800 ft. above mean sea level and the ambient temperature is 30 degrees to 130 degrees F.

IMPORTANT SAFETY NOTE
All successful vendor personnel must attend a safety orientation session conducted by TIMET. All Vendor personnel are expected to abide by TIMET plant safety rules.

FINAL ACCEPTANCE AND GUARANTEE
Upon full completion of the project and owner acceptance, the successful Vendor shall provide warranty and guarantee that the pumps and control panel meet TIMET's operating conditions and requirements as described in this specification and the Vendor's published equipment specifications.

Titanium Metals Corporation
P.O. Box 2128
Henderson, NV 89009
ph: 702-564-2544

www.timet.com

BID ITEM BREAKDOWN

Vendor to provide and break-down the bid quotation to the level desired by TIMET. Vendor also to provide estimated delivery schedule (calendar weeks from receipt of order), and recommended spare parts list. At a minimum, the quote shall identify labor, materials, equipment, and freight.

REFERENCE ATTACHMENTS

1) Specification Section 13440, “General Provisions for Instrumentation and Controls”
2) Specification Section 13442, “Instrument and Control Panel Construction”
3) Specification Section 13443, “Panel and Field Devices”
4) EPG Pumps Data Sheets

SECTION 13440

GENERAL PROVISIONS FOR INSTRUMENTATION AND CONTROLS

PART 1 GENERAL

1.01 SUMMARY

A. Section Includes:

1. General requirements for package and non-package Instrumentation and Control Systems unless otherwise specified in other sections.

1.02 DEFINITIONS

A. Selector Switch: When used under panel component description refers to maintained contact type switches. Loss and return of control power to circuit does not change control mode of requirements in switch position.

B. Push-button: When used under panel component description refers to momentary contact type switches which, unless specified otherwise, shall require electrical interlock. Loss of control power shall, unless specified otherwise, result in loss of electrical interlock and stoppage of previous mode of operations.

1.03 SYSTEM DESCRIPTION

A. Design Requirements:

1. Provide run/fail, alarm, and equipment status functions.

2. Unless otherwise specified, "run" signals shall be derived from motor starter normally open auxiliary contacts.

3. Unless otherwise specified, discrete input and output signals shall conform to:

   a. Isolated unpowered (dry) contact closures.
   b. Power contact from panel receiving signal or device receiving signal.

4. Unless otherwise specified, input and output analog signals shall conform to:

   a. 4-20 mAdc.
   b. For 2-wire transmitter, provide isolated type and power with 24 or 48 vdc at panel or device receiving signal.
   c. Where isolation is required to interface with particular equipment furnished, provide necessary I/I converters.

5. For PLC based systems manual control devices, in panel or field, shall be independent from PLC to provide maintenance and redundancy function.

6. Panels, panel devices, and field devices shall meet or exceed NEMA requirements as follows.

© GEI 2013

a. NEMA 4X: Wet locations or outdoors.

1) Instrumentation and control panels shall be 316 stainless steel (NEMA 4X).
2) Instruments and device enclosures shall be 316 stainless steel, fiberglass, or ABS plastic (NEMA 4X).

7. Design Life: Design control system for min. 10 yr life at following temperatures:

a. Permit continuous operation with panel external ambient temperatures of up to +40°C (+104°F).
b. Outdoor Panels: Permit operation with panel external ambient temperatures of down to -29°C (-20°F).
c. Indoor Panels: Permit operation with panel external ambient temperatures of down to +8°C (+40°F).

8. When motor controller disconnecting means is off, deenergize associated equipment devices powered from panel.

9. Electrical wiring and controls shall conform to Division 16.

B. Identify equipment on panel or screens with indication below:

1. Red Light On: Equipment running.
2. White Light On: Equipment failure when called to run, but not running due to power failure, overload, breaker, disconnect, or remote switch call for equipment to stop.

a. Provide parallel "required" contact wired to panel for items such as pumps and valves.
b. Provide necessary relay logic and adjustable timers to sense discrepancy between "required" and "running" and activate respective "Run" and "Fail" light from these signals. Provide horn when specified.

3. Amber Light On: Indicate equipment status such as valve open or closed.
4. Green Light On: Equipment off.

1.04 SUBMITTALS

A. General:

1. Submit following information tabulated in booklet form for each piece of equipment or system furnished under this section.
2. Table of Contents of Submittals: Include for each booklet when more than 1 item of equipment is included in submittal:

a. ENGINEER'S instrument tag number.
b. Instrument manufacturer's model number.
c. Related piping, electrical, and dimension drawings.

B. Product Data:

1. Construction materials.
2. Ranges.
3. Output/Input signals.

© GEI 2013

4. Accessories.
5. Mounting location.
6. ENGINEER'S tag number on manufacturer's specifications sheets.
7. Interconnect reference for associated field and panel instruments.
8. Component specification sheets.

C. Shop Drawings:

1. Panel fabrication and dimension drawings, nameplate legends, ENGINEER'S tag numbers, and wiring and piping schematic drawings. Project specific drawings are required for each panel, typical are not acceptable.
2. Equipment dimension drawings.
3. Equipment terminal and piping connections.
4. Loop-by-loop system electrical schematic showing terminal-to-terminal interconnections between related panel and field instruments.
5. Front of panel layout.
6. PLC I/O module connection diagram for PLC based systems.
7. Ladder/logic system electrical schematic showing wiring of each component, including ranges and set points. Wiring and ladder diagram shall have reference numbers on every line for cross referencing. Each device on ladder shall be cross-referenced with line number as to wherever it is located.
8. Terminal to terminal interconnection drawings showing wiring for panel to panel/MCC and panel to field equipment.

D. Miscellaneous:

1. Certificate of UL or nationally recognized testing laboratory (NRTL) inspection and approval for each completely assembled panel prior to shipment to Project.
2. Include ENGINEER'S tag number when available on each submittal document or page wherever specific component appears.
3. Extra materials list.

E. Operation and Maintenance (O&M) Data:

1. Include O&M data for each panel and field device installed:

a. PLC ladder logic software (electronic and printed) including tags, comments, operational database values and passwords or pass codes.
b. Configured software on electronic media to install program on spare PLC processors and programmable controller.
c. Bill of materials.
d. Instruction Manual: Includes detailed operating sequence descriptions.
e. Maintenance Manual: Instructions for maintaining equipment to include calibrating, cleaning, and trouble shooting.
f. Front and rear panel layout drawings.
g. Name plate data.

1.05 QUALITY ASSURANCE

A. Standardization:

1. Drawings and Specifications are intended to provide overall system functions. Provide equipment necessary to provide complete and operable system.
2. CONTRACTOR is responsible for costs resulting from deviations from Contract Documents.

© GEI 2013

B. Items provided under sections referenced to this section shall be listed or labeled by UL or other Nationally Recognized Testing Laboratory (NRTL).

1. Term "NRTL" shall be as defined in OSHA Regulation 1910.7.
2. Terms "listed" and "labeled" shall be as defined in National Electrical Code, Article 100.

C. Regulatory Requirements:

1. National Electrical Code (NEC): Components and installation shall comply with National Fire Protection Association (NFPA) 70.

PART 2 PRODUCTS

2.01 Furnish equipment markers with ENGINEER'S equipment name and tag number.

2.02 No aluminum components shall be used in instrumentation and control equipment.

2.02 SOURCE QUALITY CONTROL

A. Perform UL inspection and certification for each completely assembled panel before shipment to Project site.

PART 3 EXECUTION

3.01 INSTALLATION

A. Install equipment in locations indicated on Drawings and in accordance with manufacturer's written instructions and approved submittals.

END OF SECTION

© GEI 2013

SECTION 13442

INSTRUMENT AND CONTROL PANEL CONSTRUCTION

PART 1 GENERAL

1.01 SUMMARY

A. Comply with Section 13440.

1.02 SUBMITTALS

A. Shop Drawings:

1. Wiring and wiring identification.
2. Terminal identification.

B. Submit in accordance with Section 01300.

1.03 MAINTENANCE

A. Extra Materials:

1. 5 fuses or 10%, whichever is greater, for each type of fuse.
2. 30% spare unwired terminals; to be shown on panel drawings.
3. 5 lamps or 10%, whichever is greater, for each type of lamp.
4. One intrinsically safe relay and intrinsically safe barrier for each type.
5. One control relay for each type.
6. One lightning and surge protection module for each type.
7. Spare PLC I/O points wired to terminal blocks.

B. Panel Space:

1. Include 10% contiguous usable rear of panel area for future components.

PART 2 PRODUCTS

2.01 CONTROL PANELS

A. Factory-fabricate, install instruments, plumb and wire.

B. Make external connections by way of numbered terminal blocks.

C. Separate electrical components from pneumatic components by metal barriers.

D. Conform to ISA standards.

E. Construct panels to external dimensions as specified, required, or shown. Component arrangement and wiring shall be consistent for like panels.

F. Fabrication:

© GEI 2013

1. Minimum Metal Thickness: 14 ga.

    a. Construct panels so no seams or bolt heads visible when viewed from front.
    b. Panel cutouts for instruments and other devices, such as lights and switches, shall be cut, punched or drilled, and smoothly finished with rounded edges.

2. Wherever practical, enclosures shall be manufacturer's standard product.
3. Size to adequately dissipate heat generated by equipment mounted in or on panel.
4. Equip panels mounted outside buildings with thermostatically controlled space heaters capable of maintaining internal temperature of 10°C, ±2°C, with 20 mph wind at ambient temperature of -30°C. Heaters shall operate on 120 vac, 60 Hz power.
5. Install rear of panel devices on subpanel.

G. Doors:

1. Provide front doors except on graphic sections and where otherwise specified.
2. Full height, fully gasketed access doors.
3. Provide with 3-point padlock locking latches.
4. Provide full length, continuous, piano type stainless steel hinges and pins.

H. Service Outlets:

1. Provide 20 amp, 120 v service outlet circuit fused at 5 amps within back-of-panel area. Fuse separate from control power.

I. Temperature Control:

1. For NEMA 4X Applications:

    a. Provide thermostatically controlled heat exchanger and circulation fans as required to limit internal temperature buildup within sealed enclosure. Internal panel temperature shall not exceed lowest or highest temperature rating of internal components.
    b. Heat exchanger shall be of air to air heat pipe type:

        1) Manufacturer: Noren Products Inc.
        2) Components located outside of control center enclosure shall be suitable for outdoor installation.
        3) Fans shall be waterproof and installed in a stainless steel or anodized aluminum enclosure.

    c. Install heat exchanger so that NEMA rating of enclosure is not compromised.
    d. For outdoor application sunshields and air conditioners may be used to limit internal panel temperature.

J. Fusing:

1. Maximum Fuse Size: 5 amp.
2. Group instruments after separate fusing with maximum of 10 instruments/fuse.
3. Fuse power supplies individually.
4. Where 5 amp capacity is exceeded by load requirements, provide additional fuses.
5. For field devices powered by panel, provide separate fuse for each output.

K. Wiring Terminals:

© GEI 2013

1. Mount and wire panel instruments and components to terminal blocks within panel so installation shall require only setting panel in place and making connections to field wiring and utilities.
2. Provide separately mounted terminal blocks in panel for connection of field wiring to panel.
3. Label with respective loop number as designated on Panel Ladder Logic Drawings or Loop Diagrams.

L. Intrinsically Safe Components:

1. Provide intrinsically safe shunt barriers and relays as necessary when field components are located in Class I Division 1 or Division 2 hazardous class field locations.

M. Lightning and Surge Protection:

1. Provide on instrumentation and control signals whose source or destination is outside building.
2. Provide on phone lines and copper data network connections located outside building.
3. Provide on 120 vac power feeds.

N. Wiring Identification:

1. Label panel wiring at each end of conductor with wire number as designated on Panel Ladder Logic Drawings or Loop Diagrams.
2. Labels shall be heat shrinkable vinyl sleeve with permanent embossed letters. Emboss label characters on single sleeve. Heat shrink sleeves on conductors at terminal ends.
3. Conductors Color Codes:

   a. 120 vac power wiring, line (phase "A"): Black.
   b. 120 vac power wiring, neutral/common: White.
   c. 120 vac power wiring, ground: Green.
   d. 120 vac control wiring, internal power source: Red.
   e. 120 vac control wiring, external power source: Yellow.
   f. 24 vdc control wiring, internal or external power source: Light Blue.
   g. 4-20 mAdc signal wiring, positive lead: Black.
   h. 4-20 mAdc signal wiring, negative lead: White or Red.
   i. Data highway cable, signal leads: Manufacturer's standard.

O. Panel Drawing Data Pocket:

1. Mount inside without penetrating panel.
2. Size for holding wiring diagrams.
3. Construct from thermal plastic or metal.
4. Include wiring diagrams.

P. Three Phase and Motor Control Panel:

1. Through door main disconnect or circuit breaker.
2. Control transformer with primary and secondary fuses or circuit breakers.

© GEI 2013

2.02 ADDITIONAL REQUIREMENTS FOR FREE-STANDING PANEL CONSTRUCTION

A. Fabrication:

1. Fabricate each panel from sheet steel with 1 piece, 10 ga steel front and 12 ga steel sides, back, and top.
2. Provide steel angle stiffeners on back of panel face to prevent panel deflection under instrument loading or operation.
3. Provide internal structural steel framework for instrument support and panel bracing. Internal framework shall permit lifting of panel without racking or distortion.
4. Provide removable lifting rings designed to facilitate rigging and lifting of panel during installation. Provide plugs to fill lifting ring holes after installation to complete and lifting rings have been removed.
5. Where 2 or more sections of panel are mounted adjacent to one another, bolt together with front faces parallel.

B. Doors:

1. Rear access doors shall extend no further than 24 in. beyond panel when opened to 90° position.
2. For panels with no front doors or rear access, provide 36 in. deep panel with side access doors on each side.

C. Lights:

1. Provide separately fused and switched 100 watt incandescent or equivalent cold start fluorescent back-of-panel lights.
2. Provide one light for every 4 ft or less of panel width.
3. Mount inside and in top of back-of-panel area.

D. Service Outlets:

1. Space evenly along back of panel.

a. Panels 4 ft or less: 1 outlet.
b. Panels greater than 4 ft: 2 outlets.
c. Panels greater than 8 ft: 3 outlets.
d. Panels greater than 12 ft: 4 outlets.

E. Instrument Location:

1. Locate instruments designated for back of panel mounting to allow for maintenance and adjustment.
2. Front of panel instrument mounting height shall not exceed 6 ft 6 in., minimum height shall be 4 ft-0 in.

2.03 PANEL FINISH

A. Panels shall be NEMA 4X stainless steel.

2.04 NAMEPLATES

A. Provide nameplates for I&C panels and each front-of-panel instrument and device with designations as shown on Drawings and as listed in Specifications.

© GEI 2013

B. Panel Designation: Engraved with ENGINEER'S panel tag number and description with 1/2 in. high characters.

C. Application/Function Nameplate: Locate 3/16 in. characters above or near panel mounted instrument or device consisting of descriptive phrase using nomenclature as listed in Specifications (when available).

D. Laminated white plastic inscribed with black characters.

E. Tag Number: Include ENGINEER'S tag number as shown on P&ID's and in Specifications on each nameplate.

F. Provide aluminum decal with black 3/16 in. characters identifying tag number or device designation. Locate decal on instrument or device or above instrument or device on panel.

G. Secure front-of-panel and front-of-instrument nameplate with drive screws or self-tapping fasteners.

2.05 SOURCE QUALITY CONTROL

A. Test wiring and plumbing prior to shipment.

1. Test internal wiring and components to ensure panel is operational prior to shipment.
2. When panels are interwired, interconnect panels at factory and test functionality of system.
3. Simulate field component and instrument inputs at panel terminals. Test panel outputs with suitable test instruments.
4. Pressure test internal piping system and components for leaks and repair before shipping.

PART 3 EXECUTION

3.01 INSTALLATION

A. Install panels in locations indicated on Drawings and in accordance with manufacturer's written instructions and approved submittals.

B. Coordinate design and installation of equipment control panels with primary system PLC for timing and functionality of the system.

END OF SECTION

© GEI 2013

SECTION 13453

PANEL AND FIELD DEVICES

PART 1 GENERAL

1.01 SUMMARY

A. Comply with Section 13440.

PART 2 PRODUCTS

2.01 PUSH-BUTTON/SELECTOR SWITCH CONTROL UNITS AND PILOT LIGHTS

A. Manufacturers:

1. Square D.
2. Cutler-Hammer.
3. Allen Bradley.
4. Or approved equal.

B. Construction:

1. Heavy duty.
2. Oil tight, watertight.
3. Base mounting.
4. Flush panel mounting.
5. Size to mount in 30.5 mm opening without adapter. Smaller units are not acceptable.

C. Pushbuttons:

1. Flush head unless specified elsewhere.
2. Contact Blocks:

a. Double break silver contacts.
b. ac Ratings: 7,200 va make, 720 va break.
c. Single pole, double throw or double pole, single throw.
d. Up to 6 tandem blocks.

3. Momentary contact unless specified elsewhere.
4. Non-illuminated.
5. Padlock attachments where required.
6. Legend plates as required for type of operation or as specified elsewhere.

D. Remote Lock-out:

1. Jumbo red mushroom head.
2. Contact Blocks:

a. Double break silver contacts.
b. ac Ratings: 7,200 va make, 720 va break.

© GEI 2013

c. Single pole, double throw or double pole, single throw.
d. Up to 2 tandem blocks.

3. Push/Pull.
4. Maintained contact.
5. Non-illuminated.
6. Padlock attachments constructed of metal. Plastic material is not acceptable.
7. Legend Plates:

a. Extra large.
b. Red.
c. Emergency.

E. Selector Switches:

1. Maintained position unless specified elsewhere.
2. Contact Blocks:

a. Double break silver contacts.
b. ac Ratings: 7,200 va make, 720 va break.
c. Single pole, double throw or double pole, single throw.
d. Up to 6 tandem blocks.

3. Operators:

a. Number of positions as specified elsewhere.
b. Standard knob type unless specified elsewhere.

4. Legend plates as required for type of operation or specified elsewhere.

F. Pilot Lights:

1. Transformer type.
2. Bayonet, 6 to 8 v bulb.
3. Colored lenses as specified elsewhere.
4. Interchangeable lenses.
5. Transformer rated for 120 v, 60 Hz.
6. Push to test.
7. Legend plates as required for type of operation or specified elsewhere.

G. Nameplates:

1. General.

a. Engraved laminated plastic.
b. Letters 3/16 in. high.
c. Black letters on white background.
d. Identify per equipment controlled.

© GEI 2013

2.02 MOTOR STARTER CONTROL RELAYS

A. Manufacturers:

1. Square D.
2. Cutler-Hammer.
3. Or approved equal.

B. Construction:

1. Industrial type.
2. 600 v rated.
3. ac operation.
4. Pressure wire connectors.

C. Operating Data:

1. Pickup Time: 11 ms maximum.
2. Dropout Time: 6 ms maximum.

D. Coil:

1. Molded construction.
2. 120 vac, 60 Hz or 24 vdc
3. Continuous rated.
4. 155 va inrush, maximum.
5. 22 va sealed, maximum.
6. Suppress coil transients to 300 v or less.

E. Contacts:

1. Double break.
2. Silver alloy.
3. Convertible.
4. Color coded to indicate status.
5. Pilot duty.

F. Track mounting capability.

G. Accessories:

1. Add-on pole attachment.

   a. 4 NO and 4 NC contacts.
   b. Add-on to 0 to 4-pole relay.

2. Latch attachment.

2.03 GENERAL PURPOSE CONTROL RELAYS

A. Manufacturers:

1. Potter and Brumfield, KU Series.
2. Struthers Dunn.

© GEI 2013

3. Or approved equal.

B. Operating Data:

1. Pickup Time: 13 ms maximum.
2. Dropout Time: 10 ms maximum.
3. Operating Temperature: -45°C to 70°C.

C. ac Coil:

1. 120 or 240 vac.
2. Continuous rated.
3. 3.5 va inrush.
4. 1.2 va sealed.
5. 50 to 60 Hz.
6. Minimum Dropout Voltage: 10% of coil rated voltage.

D. dc Coil:

1. 24 or 120 vdc.
2. Continuous rated.
3. Minimum Coil Resistance:

a. 24 vdc: 450 ohm.
b. 100 vdc: 9,000 ohm.

E. Contacts:

1. Silver cadmium oxide.
2. Gold flashed fine silver, gold diffused for 1 amp or less resistive loads.
3. 4 Form C.
4. 120 vac.
5. 10 amp make, 15 amp break, (inductive).

F. Rated at 10 million operations.

G. Plug-in sockets.

H. Enclosed and protected by polycarbonate cover.

I. Provide relay retaining clips.

2.04 FLOAT SWITCHES

A. Manufacturers:

1. Consolidated 9GEF.
2. Anchor Scientific GP.
3. Or approved equal.

B. Float: 316 stainless steel.

C. Provide sufficient length of nitrile PVC jacketed cable.

D. Mounting Hardware: 316 stainless steel.

© GEI 2013

E. Switch: Non-Mercury tilt type switch with minimum rating of 10 million cycles.

2.05 TERMINAL BLOCKS FOR CONTROL WIRING

A. Manufacturers:

1. Allen Bradley, Bulletin 1492.
2. Phoenix Contact. UK-5N.

B. General:

1. 600 v rating.
2. Marker labels on each terminal.
3. Clip-mount on DIN rails.
4. Insulating end caps to support each terminal block assembly.
5. Touchsafe terminal block and accessories.
6. Connection: Captive screw and pressure plate. Connection shall not cause deformation of wire.
7. Contact material and surface: Nickel or tin plated copper alloy. Do not use ferrous metals.

C. Switched Knife Disconnect (when specified):

1. Non-fused.
2. Single-pull, single throw (SPST).
3. Hinged disconnect lever.

D. Fused Indicating (when specified):

1. LED blown fuse indicating light.
2. Hinged disconnect lever.
3. Size fuse for load.
4. 15 amp capacity fuse holder.

2.06 EXTERIOR MOUNTED ALARM LIGHT

A. Manufacturers:

1. Crouse Hinds, Model VXHF25GP.
2. Or approved equal.

B. Power: 120 vac, 150w.

C. Incandescent, vapor tight enclosed and gasketed.

D. Suitable for use in wet location.

E. Aluminum body.

F. Shatter-proof glass globe with aluminum guard, red unless otherwise specified.

G. 3/4 in. conduit connection.

© GEI 2013

PART 3 EXECUTION

3.01 INSTALLATION

A. Install in accordance with manufacturer's written instructions, local codes, applicable requirements of NEC, NECA "Standard of Installation," and recognized industry practices.

B. Control Relays:

1. Provide control relays for general purpose logic circuits.
2. Provide motor starter control relays when load exceeds rating of general purpose control relays.

END OF SECTION

© GEI 2013

MARK GEI 10-25-13

SERIES 2 SurePump™

Flow Range 4-14 GPM

60 Hz

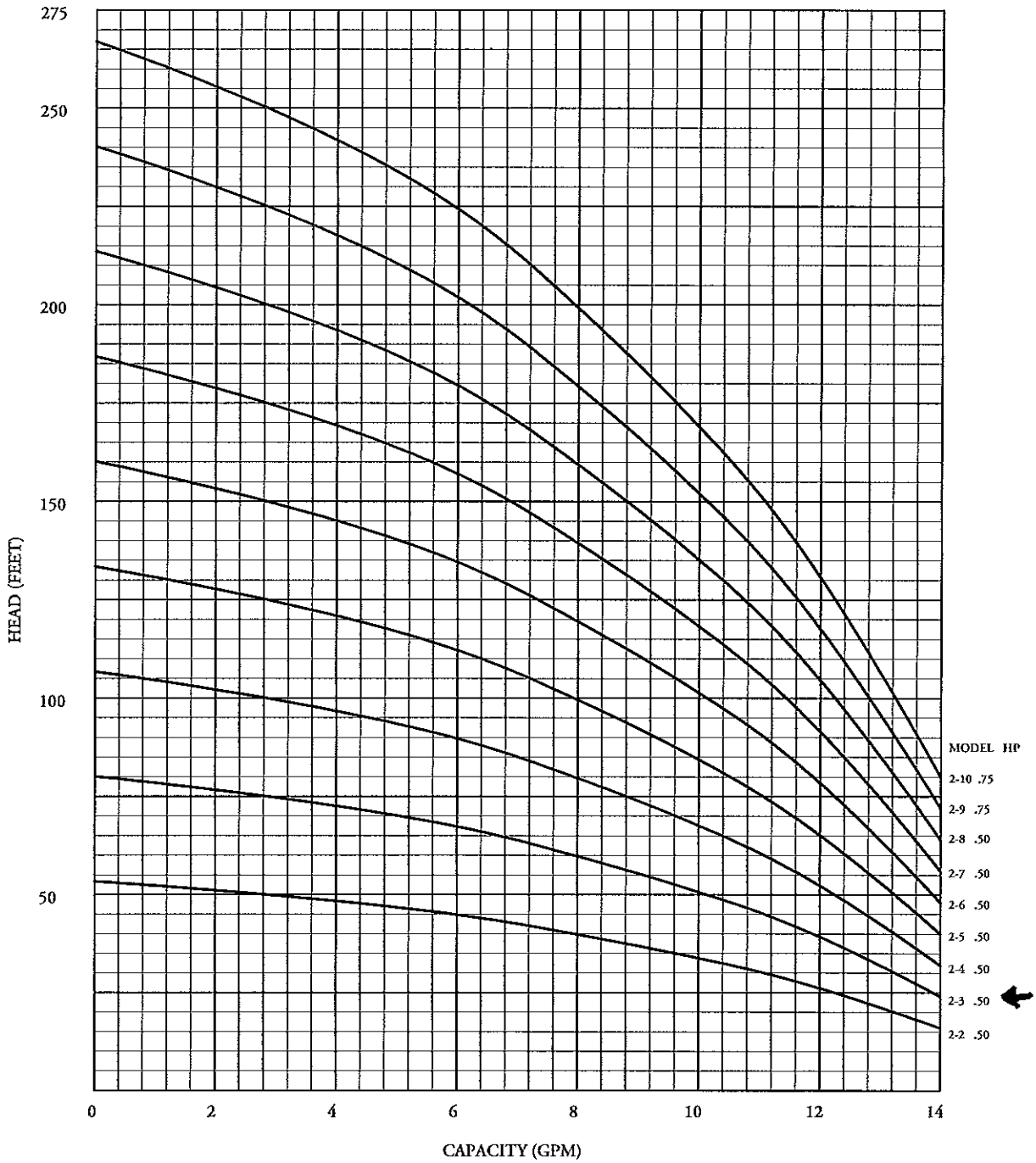

DATA SUBJECT TO CHANGE WITHOUT NOTICE

© 2003 EPG Companies Inc.
SurePump is a Reg. TM of EPG Companies Inc.

MV GEI 10-25-13

SERIES 2 TSP SUBMERSIBLE PUMP

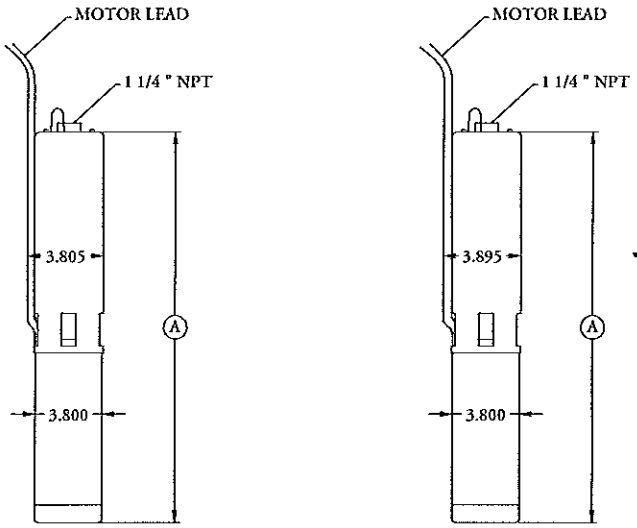

14 GA
MOTOR LEAD

12 GA
MOTOR LEAD

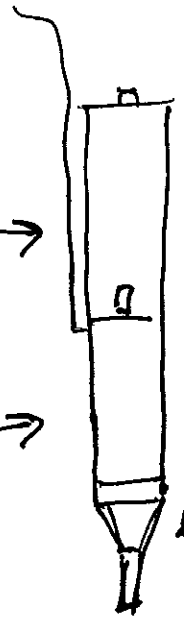

WITH CENTER MOUNT TRANSDUCER

NOTE: MOUNTED BELOW MOTOR ON TSP

MODEL	HP	PHASE	A	*APPROXIMATE SHIPPING WEIGHT
2-2	0.50	1	17.33	27.50
2-2	0.50	3	17.33	27.50
2-3	0.50	1	18.16	27.75
2-3	0.50	3	18.16	27.75
2-4	0.50	1	18.99	28.00
2-4	0.50	3	18.99	28.00
2-5	0.50	1	19.82	28.25
2-5	0.50	3	19.82	28.25
2-6	0.50	1	20.65	28.50
2-6	0.50	3	20.65	28.50
2-7	0.50	1	21.48	28.75
2-7	0.50	3	21.48	28.75
2-8	0.50	1	22.31	29.00
2-8	0.50	3	22.31	29.00
2-9	0.75	1	24.27	32.25
2-9	0.75	3	24.27	32.25
2-10	0.75	1	25.10	32.50
2-10	0.75	3	25.10	32.50

NOTE: ALL DIMENSIONS ARE IN INCHES.

NOTE: CURVES SAME FOR ALL (TSP, WSP, WSOPT, VSOPT, TSPPT)

*SHIPPING WEIGHT INCLUDES
CRATE, PUMP, MOTOR AND 50' OF 14-4 MOTOR LEAD.

© 2003 EPG Companies Inc.
SurePump is a Reg. TM of EPG Companies Inc.

Titanium Metals Corporation
P.O. Box 2128
Henderson, NV 89009
ph: 702-564-2544

www.timet.com

CONCRETE LIFT STATION SPECIFICATION

Date: November 22, 2013
Air Stripper Specification Rev 0 **TIMET RFQ #____**
Owner: TIMET – Henderson, Nevada

REQUIREMENT TO SUBMIT A BID
Vendor must be a registered supplier in the TIMET system as a minimum requirement to supply the lift station and control panel for the Henderson groundwater project.

TIMET's expectation is to meet with and negotiate pricing with Jensen Engineered Systems (Vendor) for a packaged duplex lift station.

DESCRIPTION:
Vender shall quote the manufacture, delivery, and off-loading of one duplex-pumping concrete lift station as described in this specification and as provided in the design drawings previously provided by the Vendor. This lift station specification consists of 1) the specifications outlined within this document, 2) general electrical specifications, and 3) the design drawings previously provided by the Vendor. The Vendor will also provide a quote for support during installation and commissioning of the lift station at the site. A separate quotation will be solicited for installation of the lift station and connection to the system piping, electrical, and controls.

TIMET CONTACTS

Project Manager / Technical
Jeff Searls
Phone: 702-564-2544x284
Fax: 702-564-1704
E-Mail: jeff.searls@timet.com

Purchasing:
Anees Shafi
Phone: 702-564-2544
Fax: 702-564-1704
E-Mail: Anees.Shafi@Timet.com

Jeff Searls will be the single technical/logistical point of contact for this project, unless contractor is otherwise notified in writing.

QUOTATION IS DUE FRIDAY, DECEMBER 6, 2013 BY 2:00 PM PST.
TIMET REQUESTS A CALL WITH VENDOR TO REVIEW BID REQUIREMENTS FORMALLY ON/BEFORE THIS DATE.

INTENT AND SCOPE OF WORK
TIMET Henderson expects, a packaged concrete lift station, delivered and off-loaded at the site, which will meet the specifications for this industrial application:

PUMPS	
Model	HOMA Model CH436/38/2/3
Impeller	Multi vane impeller
Impeller Size	4 9/16"

Titanium Metals Corporation
P.O. Box 2128
Henderson, NV 89009
ph: 702-564-2544

www.timet.com

Solid Size	0 inch
Discharge Port	2” – 11 ½ NPT
WETWELL MANHOLE	
Item	**Description**
Material	Precast concrete
Diameter	96” (I.D.)
Rim Elevation	1741.0’
Wetwell Floor (invert)	1729.0’
Manhole Depth	12.0’
Inlet Elevation	1737.0’
CONTROL SYSTEM	
Control Panel	Duplex MVP Panel, 208/230V, 3∅ Motors, 0.5-5 HP
Control Panel Housing	NEMA 4X stainless steel
Level Sensor	Pressure transducer
Backup Mechanical Floats	(2) internally weighted, non-mercury level sensors
Magnetic Flow Meter	3” Badger M2000 w/ remote mounted amplifier
ELECTRICAL/CONTROLS GENERAL	
Main Disconnect	Circuit breaker, externally operable
Electrical Enclosures	NEMA 4X, bottom conduit entry
Conduits	PVC-coated rigid galvanized steel
Incoming Power	480V, 3 PH, 60 Hz, three-wire
Local Motor Disconnect Switches	Required, factory-installed

CONTROL REQUIREMENTS/PHILOSOPHY:
Manufacturer’s control panel will be used to control manufacturer’s equipment as well as have the capability to control additional equipment provided by Others:

- Provide 480V, 40A, 10 kAIC, two-pole circuit breaker, for serving of external transformer (transformer and load-side connection to transformer by Others). Circuit breaker shall be served from line-side of main panel circuit breaker (line-side connection two two-pole circuit breaker by manufacturer). Two-pole circuit breaker does not need to be externally operable.
- Panel PLC to be Allen-Bradley CompactLogix. Manufacturer to include necessary I/O cards for interfacing with manufacturer’s equipment. Cards shall also include the capacity for the following I/O

Titanium Metals Corporation
P.O. Box 2128
Henderson, NV 89009
ph: 702-564-2544

www.timet.com

associated with Other's equipment:
  - Ten (10) relay digital outputs
  - Ten (10) digital inputs
  - Ten (10) 4-20mA analog inputs
- Internal Ethernet switch with fiber optic port, for remote monitoring of system (external fiber optic connection by Others). At a minimum, need to be able to remotely monitor on/off status for all motors, all electric instruments (i.e. level switches, differential pressure switches, etc.) and general alarm condition.
- Internal convenience receptacle.
- Internal transformers, power supplies, etc. for any voltages required other than 480V, 3 PH, 60 Hz.
- Programming will be by Others. Manufacturer to provide operating philosophy and set points for Other's use in programming.

DRAWINGS AND DOCUMENTATION TO BE SUBMITTED:
Shop drawings are to be submitted to Jeff Searls, in the TIMET Engineering Department, for review and acceptance. Provide recommended spare parts list for inclusion in order of lift station. Any changes from the current design of the lift station or pumps must have a submittal drawing or revision of the existing drawings, engineering calculations, and must be approved by TIMET. Upon delivery of the equipment, provide four (4) complete Operation and Maintenance manuals including information regarding of all the parts, materials, and drawings including electrical schematics. AutoCad drawings are to be provided in version 2009 or earlier as single files (with no external references). ALL drawings will be the property of TIMET and may not be used for any other purpose than this project without prior written approval from TIMET.

LIFT STATION DELIVERY, INSTALLATION and COMISSIONING:
Coordinate schedule with TIMET and general contractor for delivery, off-loading, installation, and commissioning of the lift station.

General contractor will install lift station and complete piping and electrical/I&C connections. A Jensen technical representative is requested to be on site during installation and commissioning of the lift station.

SITE DATA
The equipment is to be installed outdoors at the TIMET facility in Henderson, Nevada. Site elevation is approximately 1,800 ft. above mean sea level and the ambient temperature is 30 degrees to 130 degrees F.

IMPORTANT SAFETY NOTE
All successful vendor personnel must attend a safety orientation session conducted by TIMET. All Vendor personnel are expected to abide by TIMET plant safety rules.

FINAL ACCEPTANCE AND GUARANTEE
Upon full completion of the equipment installation, commissioning, and owner acceptance, the successful Vendor shall provide warranty and guarantee the adequacy of the air stripper to meet requirements as described in this specification and the Vendor's published equipment specifications.

Titanium Metals Corporation
P.O. Box 2128
Henderson, NV 89009
ph: 702-564-2544

www.timet.com

BID ITEM BREAKDOWN

Vendor to provide and break-down the bid quotation to the level desired by TIMET. Vendor also to provide estimated delivery schedule (calendar weeks from receipt of order), and recommended spare parts list. At a minimum, the quote shall identify labor, materials, equipment, and freight.

REFERENCE ATTACHMENTS

1) Specification Section 13440, “General Provisions for Instrumentation and Controls”
2) Specification Section 13442, “Instrument and Control Panel Construction”
3) Specification Section 13443, “Panel and Field Devices”
4) Jensen Design Drawings and Pump Data

SECTION 13440

GENERAL PROVISIONS FOR INSTRUMENTATION AND CONTROLS

PART 1 GENERAL

1.01 SUMMARY

A. Section Includes:

1. General requirements for package and non-package Instrumentation and Control Systems unless otherwise specified in other sections.

1.02 DEFINITIONS

A. Selector Switch: When used under panel component description refers to maintained contact type switches. Loss and return of control power to circuit does not change control mode of requirements in switch position.

B. Push-button: When used under panel component description refers to momentary contact type switches which, unless specified otherwise, shall require electrical interlock. Loss of control power shall, unless specified otherwise, result in loss of electrical interlock and stoppage of previous mode of operations.

1.03 SYSTEM DESCRIPTION

A. Design Requirements:

1. Provide run/fail, alarm, and equipment status functions.

2. Unless otherwise specified, "run" signals shall be derived from motor starter normally open auxiliary contacts.

3. Unless otherwise specified, discrete input and output signals shall conform to:

   a. Isolated unpowered (dry) contact closures.
   b. Power contact from panel receiving signal or device receiving signal.

4. Unless otherwise specified, input and output analog signals shall conform to:

   a. 4-20 mAdc.
   b. For 2-wire transmitter, provide isolated type and power with 24 or 48 vdc at panel or device receiving signal.
   c. Where isolation is required to interface with particular equipment furnished, provide necessary I/I converters.

5. For PLC based systems manual control devices, in panel or field, shall be independent from PLC to provide maintenance and redundancy function.

6. Panels, panel devices, and field devices shall meet or exceed NEMA requirements as follows.

© GEI 2013

a. NEMA 4X: Wet locations or outdoors.

1) Instrumentation and control panels shall be 316 stainless steel (NEMA 4X).
2) Instruments and device enclosures shall be 316 stainless steel, fiberglass, or ABS plastic (NEMA 4X).

7. Design Life: Design control system for min. 10 yr life at following temperatures:

a. Permit continuous operation with panel external ambient temperatures of up to +40°C (+104°F).
b. Outdoor Panels: Permit operation with panel external ambient temperatures of down to -29°C (-20°F).
c. Indoor Panels: Permit operation with panel external ambient temperatures of down to +8°C (+40°F).

8. When motor controller disconnecting means is off, deenergize associated equipment devices powered from panel.

9. Electrical wiring and controls shall conform to Division 16.

B. Identify equipment on panel or screens with indication below:

1. Red Light On: Equipment running.
2. White Light On: Equipment failure when called to run, but not running due to power failure, overload, breaker, disconnect, or remote switch call for equipment to stop.

a. Provide parallel "required" contact wired to panel for items such as pumps and valves.
b. Provide necessary relay logic and adjustable timers to sense discrepancy between "required" and "running" and activate respective "Run" and "Fail" light from these signals. Provide horn when specified.

3. Amber Light On: Indicate equipment status such as valve open or closed.
4. Green Light On: Equipment off.

1.04 SUBMITTALS

A. General:

1. Submit following information tabulated in booklet form for each piece of equipment or system furnished under this section.
2. Table of Contents of Submittals: Include for each booklet when more than 1 item of equipment is included in submittal:

a. ENGINEER'S instrument tag number.
b. Instrument manufacturer's model number.
c. Related piping, electrical, and dimension drawings.

B. Product Data:

1. Construction materials.
2. Ranges.
3. Output/Input signals.

© GEI 2013

4. Accessories.
5. Mounting location.
6. ENGINEER'S tag number on manufacturer's specifications sheets.
7. Interconnect reference for associated field and panel instruments.
8. Component specification sheets.

C. Shop Drawings:

1. Panel fabrication and dimension drawings, nameplate legends, ENGINEER'S tag numbers, and wiring and piping schematic drawings. Project specific drawings are required for each panel, typical are not acceptable.
2. Equipment dimension drawings.
3. Equipment terminal and piping connections.
4. Loop-by-loop system electrical schematic showing terminal-to-terminal interconnections between related panel and field instruments.
5. Front of panel layout.
6. PLC I/O module connection diagram for PLC based systems.
7. Ladder/logic system electrical schematic showing wiring of each component, including ranges and set points. Wiring and ladder diagram shall have reference numbers on every line for cross referencing. Each device on ladder shall be cross-referenced with line number as to wherever it is located.
8. Terminal to terminal interconnection drawings showing wiring for panel to panel/MCC and panel to field equipment.

D. Miscellaneous:

1. Certificate of UL or nationally recognized testing laboratory (NRTL) inspection and approval for each completely assembled panel prior to shipment to Project.
2. Include ENGINEER'S tag number when available on each submittal document or page wherever specific component appears.
3. Extra materials list.

E. Operation and Maintenance (O&M) Data:

1. Include O&M data for each panel and field device installed:

a. PLC ladder logic software (electronic and printed) including tags, comments, operational database values and passwords or pass codes.
b. Configured software on electronic media to install program on spare PLC processors and programmable controller.
c. Bill of materials.
d. Instruction Manual: Includes detailed operating sequence descriptions.
e. Maintenance Manual: Instructions for maintaining equipment to include calibrating, cleaning, and trouble shooting.
f. Front and rear panel layout drawings.
g. Name plate data.

1.05 QUALITY ASSURANCE

A. Standardization:

1. Drawings and Specifications are intended to provide overall system functions. Provide equipment necessary to provide complete and operable system.
2. CONTRACTOR is responsible for costs resulting from deviations from Contract Documents.

© GEI 2013

B. Items provided under sections referenced to this section shall be listed or labeled by UL or other Nationally Recognized Testing Laboratory (NRTL).

1. Term "NRTL" shall be as defined in OSHA Regulation 1910.7.
2. Terms "listed" and "labeled" shall be as defined in National Electrical Code, Article 100.

C. Regulatory Requirements:

1. National Electrical Code (NEC): Components and installation shall comply with National Fire Protection Association (NFPA) 70.

PART 2 PRODUCTS

2.01 Furnish equipment markers with ENGINEER'S equipment name and tag number.

2.02 No aluminum components shall be used in instrumentation and control equipment.

2.02 SOURCE QUALITY CONTROL

A. Perform UL inspection and certification for each completely assembled panel before shipment to Project site.

PART 3 EXECUTION

3.01 INSTALLATION

A. Install equipment in locations indicated on Drawings and in accordance with manufacturer's written instructions and approved submittals.

END OF SECTION

© GEI 2013

SECTION 13442

INSTRUMENT AND CONTROL PANEL CONSTRUCTION

PART 1 GENERAL

1.01 SUMMARY

A. Comply with Section 13440.

1.02 SUBMITTALS

A. Shop Drawings:

1. Wiring and wiring identification.
2. Terminal identification.

B. Submit in accordance with Section 01300.

1.03 MAINTENANCE

A. Extra Materials:

1. 5 fuses or 10%, whichever is greater, for each type of fuse.
2. 30% spare unwired terminals; to be shown on panel drawings.
3. 5 lamps or 10%, whichever is greater, for each type of lamp.
4. One intrinsically safe relay and intrinsically safe barrier for each type.
5. One control relay for each type.
6. One lightning and surge protection module for each type.
7. Spare PLC I/O points wired to terminal blocks.

B. Panel Space:

1. Include 10% contiguous usable rear of panel area for future components.

PART 2 PRODUCTS

2.01 CONTROL PANELS

A. Factory-fabricate, install instruments, plumb and wire.

B. Make external connections by way of numbered terminal blocks.

C. Separate electrical components from pneumatic components by metal barriers.

D. Conform to ISA standards.

E. Construct panels to external dimensions as specified, required, or shown. Component arrangement and wiring shall be consistent for like panels.

F. Fabrication:

© GEI 2013

1. Minimum Metal Thickness: 14 ga.

    a. Construct panels so no seams or bolt heads visible when viewed from front.
    b. Panel cutouts for instruments and other devices, such as lights and switches, shall be cut, punched or drilled, and smoothly finished with rounded edges.

2. Wherever practical, enclosures shall be manufacturer's standard product.
3. Size to adequately dissipate heat generated by equipment mounted in or on panel.
4. Equip panels mounted outside buildings with thermostatically controlled space heaters capable of maintaining internal temperature of 10°C, ±2°C, with 20 mph wind at ambient temperature of -30°C. Heaters shall operate on 120 vac, 60 Hz power.
5. Install rear of panel devices on subpanel.

G. Doors:

1. Provide front doors except on graphic sections and where otherwise specified.
2. Full height, fully gasketed access doors.
3. Provide with 3-point padlock locking latches.
4. Provide full length, continuous, piano type stainless steel hinges and pins.

H. Service Outlets:

1. Provide 20 amp, 120 v service outlet circuit fused at 5 amps within back-of-panel area. Fuse separate from control power.

I. Temperature Control:

1. For NEMA 4X Applications:

    a. Provide thermostatically controlled heat exchanger and circulation fans as required to limit internal temperature buildup within sealed enclosure. Internal panel temperature shall not exceed lowest or highest temperature rating of internal components.
    b. Heat exchanger shall be of air to air heat pipe type:

        1) Manufacturer: Noren Products Inc.
        2) Components located outside of control center enclosure shall be suitable for outdoor installation.
        3) Fans shall be waterproof and installed in a stainless steel or anodized aluminum enclosure.

    c. Install heat exchanger so that NEMA rating of enclosure is not compromised.
    d. For outdoor application sunshields and air conditioners may be used to limit internal panel temperature.

J. Fusing:

1. Maximum Fuse Size: 5 amp.
2. Group instruments after separate fusing with maximum of 10 instruments/fuse.
3. Fuse power supplies individually.
4. Where 5 amp capacity is exceeded by load requirements, provide additional fuses.
5. For field devices powered by panel, provide separate fuse for each output.

K. Wiring Terminals:

© GEI 2013

1. Mount and wire panel instruments and components to terminal blocks within panel so installation shall require only setting panel in place and making connections to field wiring and utilities.
2. Provide separately mounted terminal blocks in panel for connection of field wiring to panel.
3. Label with respective loop number as designated on Panel Ladder Logic Drawings or Loop Diagrams.

L. Intrinsically Safe Components:

1. Provide intrinsically safe shunt barriers and relays as necessary when field components are located in Class I Division 1 or Division 2 hazardous class field locations.

M. Lightning and Surge Protection:

1. Provide on instrumentation and control signals whose source or destination is outside building.
2. Provide on phone lines and copper data network connections located outside building.
3. Provide on 120 vac power feeds.

N. Wiring Identification:

1. Label panel wiring at each end of conductor with wire number as designated on Panel Ladder Logic Drawings or Loop Diagrams.
2. Labels shall be heat shrinkable vinyl sleeve with permanent embossed letters. Emboss label characters on single sleeve. Heat shrink sleeves on conductors at terminal ends.
3. Conductors Color Codes:

   a. 120 vac power wiring, line (phase "A"): Black.
   b. 120 vac power wiring, neutral/common: White.
   c. 120 vac power wiring, ground: Green.
   d. 120 vac control wiring, internal power source: Red.
   e. 120 vac control wiring, external power source: Yellow.
   f. 24 vdc control wiring, internal or external power source: Light Blue.
   g. 4-20 mAdc signal wiring, positive lead: Black.
   h. 4-20 mAdc signal wiring, negative lead: White or Red.
   i. Data highway cable, signal leads: Manufacturer's standard.

O. Panel Drawing Data Pocket:

1. Mount inside without penetrating panel.
2. Size for holding wiring diagrams.
3. Construct from thermal plastic or metal.
4. Include wiring diagrams.

P. Three Phase and Motor Control Panel:

1. Through door main disconnect or circuit breaker.
2. Control transformer with primary and secondary fuses or circuit breakers.

© GEI 2013

2.02 ADDITIONAL REQUIREMENTS FOR FREE-STANDING PANEL CONSTRUCTION

A. Fabrication:

1. Fabricate each panel from sheet steel with 1 piece, 10 ga steel front and 12 ga steel sides, back, and top.
2. Provide steel angle stiffeners on back of panel face to prevent panel deflection under instrument loading or operation.
3. Provide internal structural steel framework for instrument support and panel bracing. Internal framework shall permit lifting of panel without racking or distortion.
4. Provide removable lifting rings designed to facilitate rigging and lifting of panel during installation. Provide plugs to fill lifting ring holes after installation to complete and lifting rings have been removed.
5. Where 2 or more sections of panel are mounted adjacent to one another, bolt together with front faces parallel.

B. Doors:

1. Rear access doors shall extend no further than 24 in. beyond panel when opened to 90° position.
2. For panels with no front doors or rear access, provide 36 in. deep panel with side access doors on each side.

C. Lights:

1. Provide separately fused and switched 100 watt incandescent or equivalent cold start fluorescent back-of-panel lights.
2. Provide one light for every 4 ft or less of panel width.
3. Mount inside and in top of back-of-panel area.

D. Service Outlets:

1. Space evenly along back of panel.

a. Panels 4 ft or less: 1 outlet.
b. Panels greater than 4 ft: 2 outlets.
c. Panels greater than 8 ft: 3 outlets.
d. Panels greater than 12 ft: 4 outlets.

E. Instrument Location:

1. Locate instruments designated for back of panel mounting to allow for maintenance and adjustment.
2. Front of panel instrument mounting height shall not exceed 6 ft 6 in., minimum height shall be 4 ft-0 in.

2.03 PANEL FINISH

A. Panels shall be NEMA 4X stainless steel.

2.04 NAMEPLATES

A. Provide nameplates for I&C panels and each front-of-panel instrument and device with designations as shown on Drawings and as listed in Specifications.

© GEI 2013

B. Panel Designation: Engraved with ENGINEER'S panel tag number and description with 1/2 in. high characters.

C. Application/Function Nameplate: Locate 3/16 in. characters above or near panel mounted instrument or device consisting of descriptive phrase using nomenclature as listed in Specifications (when available).

D. Laminated white plastic inscribed with black characters.

E. Tag Number: Include ENGINEER'S tag number as shown on P&ID's and in Specifications on each nameplate.

F. Provide aluminum decal with black 3/16 in. characters identifying tag number or device designation. Locate decal on instrument or device or above instrument or device on panel.

G. Secure front-of-panel and front-of-instrument nameplate with drive screws or self-tapping fasteners.

2.05 SOURCE QUALITY CONTROL

A. Test wiring and plumbing prior to shipment.

1. Test internal wiring and components to ensure panel is operational prior to shipment.
2. When panels are interwired, interconnect panels at factory and test functionality of system.
3. Simulate field component and instrument inputs at panel terminals. Test panel outputs with suitable test instruments.
4. Pressure test internal piping system and components for leaks and repair before shipping.

PART 3 EXECUTION

3.01 INSTALLATION

A. Install panels in locations indicated on Drawings and in accordance with manufacturer's written instructions and approved submittals.

B. Coordinate design and installation of equipment control panels with primary system PLC for timing and functionality of the system.

END OF SECTION

© GEI 2013

SECTION 13453

PANEL AND FIELD DEVICES

PART 1 GENERAL

1.01 SUMMARY

A. Comply with Section 13440.

PART 2 PRODUCTS

2.01 PUSH-BUTTON/SELECTOR SWITCH CONTROL UNITS AND PILOT LIGHTS

A. Manufacturers:

1. Square D.
2. Cutler-Hammer.
3. Allen Bradley.
4. Or approved equal.

B. Construction:

1. Heavy duty.
2. Oil tight, watertight.
3. Base mounting.
4. Flush panel mounting.
5. Size to mount in 30.5 mm opening without adapter. Smaller units are not acceptable.

C. Pushbuttons:

1. Flush head unless specified elsewhere.
2. Contact Blocks:

a. Double break silver contacts.
b. ac Ratings: 7,200 va make, 720 va break.
c. Single pole, double throw or double pole, single throw.
d. Up to 6 tandem blocks.

3. Momentary contact unless specified elsewhere.
4. Non-illuminated.
5. Padlock attachments where required.
6. Legend plates as required for type of operation or as specified elsewhere.

D. Remote Lock-out:

1. Jumbo red mushroom head.
2. Contact Blocks:

a. Double break silver contacts.
b. ac Ratings: 7,200 va make, 720 va break.

© GEI 2013

c. Single pole, double throw or double pole, single throw.
d. Up to 2 tandem blocks.

3. Push/Pull.
4. Maintained contact.
5. Non-illuminated.
6. Padlock attachments constructed of metal. Plastic material is not acceptable.
7. Legend Plates:

a. Extra large.
b. Red.
c. Emergency.

E. Selector Switches:

1. Maintained position unless specified elsewhere.
2. Contact Blocks:

a. Double break silver contacts.
b. ac Ratings: 7,200 va make, 720 va break.
c. Single pole, double throw or double pole, single throw.
d. Up to 6 tandem blocks.

3. Operators:

a. Number of positions as specified elsewhere.
b. Standard knob type unless specified elsewhere.

4. Legend plates as required for type of operation or specified elsewhere.

F. Pilot Lights:

1. Transformer type.
2. Bayonet, 6 to 8 v bulb.
3. Colored lenses as specified elsewhere.
4. Interchangeable lenses.
5. Transformer rated for 120 v, 60 Hz.
6. Push to test.
7. Legend plates as required for type of operation or specified elsewhere.

G. Nameplates:

1. General.

a. Engraved laminated plastic.
b. Letters 3/16 in. high.
c. Black letters on white background.
d. Identify per equipment controlled.

© GEI 2013

2.02 MOTOR STARTER CONTROL RELAYS

A. Manufacturers:

1. Square D.
2. Cutler-Hammer.
3. Or approved equal.

B. Construction:

1. Industrial type.
2. 600 v rated.
3. ac operation.
4. Pressure wire connectors.

C. Operating Data:

1. Pickup Time: 11 ms maximum.
2. Dropout Time: 6 ms maximum.

D. Coil:

1. Molded construction.
2. 120 vac, 60 Hz or 24 vdc
3. Continuous rated.
4. 155 va inrush, maximum.
5. 22 va sealed, maximum.
6. Suppress coil transients to 300 v or less.

E. Contacts:

1. Double break.
2. Silver alloy.
3. Convertible.
4. Color coded to indicate status.
5. Pilot duty.

F. Track mounting capability.

G. Accessories:

1. Add-on pole attachment.

   a. 4 NO and 4 NC contacts.
   b. Add-on to 0 to 4-pole relay.

2. Latch attachment.

2.03 GENERAL PURPOSE CONTROL RELAYS

A. Manufacturers:

1. Potter and Brumfield, KU Series.
2. Struthers Dunn.

© GEI 2013

3. Or approved equal.

B. Operating Data:

1. Pickup Time: 13 ms maximum.
2. Dropout Time: 10 ms maximum.
3. Operating Temperature: -45°C to 70°C.

C. ac Coil:

1. 120 or 240 vac.
2. Continuous rated.
3. 3.5 va inrush.
4. 1.2 va sealed.
5. 50 to 60 Hz.
6. Minimum Dropout Voltage: 10% of coil rated voltage.

D. dc Coil:

1. 24 or 120 vdc.
2. Continuous rated.
3. Minimum Coil Resistance:

a. 24 vdc: 450 ohm.
b. 100 vdc: 9,000 ohm.

E. Contacts:

1. Silver cadmium oxide.
2. Gold flashed fine silver, gold diffused for 1 amp or less resistive loads.
3. 4 Form C.
4. 120 vac.
5. 10 amp make, 15 amp break, (inductive).

F. Rated at 10 million operations.

G. Plug-in sockets.

H. Enclosed and protected by polycarbonate cover.

I. Provide relay retaining clips.

2.04 FLOAT SWITCHES

A. Manufacturers:

1. Consolidated 9GEF.
2. Anchor Scientific GP.
3. Or approved equal.

B. Float: 316 stainless steel.

C. Provide sufficient length of nitrile PVC jacketed cable.

D. Mounting Hardware: 316 stainless steel.

© GEI 2013

E. Switch: Non-Mercury tilt type switch with minimum rating of 10 million cycles.

2.05 TERMINAL BLOCKS FOR CONTROL WIRING

A. Manufacturers:

1. Allen Bradley, Bulletin 1492.
2. Phoenix Contact. UK-5N.

B. General:

1. 600 v rating.
2. Marker labels on each terminal.
3. Clip-mount on DIN rails.
4. Insulating end caps to support each terminal block assembly.
5. Touchsafe terminal block and accessories.
6. Connection: Captive screw and pressure plate. Connection shall not cause deformation of wire.
7. Contact material and surface: Nickel or tin plated copper alloy. Do not use ferrous metals.

C. Switched Knife Disconnect (when specified):

1. Non-fused.
2. Single-pull, single throw (SPST).
3. Hinged disconnect lever.

D. Fused Indicating (when specified):

1. LED blown fuse indicating light.
2. Hinged disconnect lever.
3. Size fuse for load.
4. 15 amp capacity fuse holder.

2.06 EXTERIOR MOUNTED ALARM LIGHT

A. Manufacturers:

1. Crouse Hinds, Model VXHF25GP.
2. Or approved equal.

B. Power: 120 vac, 150w.

C. Incandescent, vapor tight enclosed and gasketed.

D. Suitable for use in wet location.

E. Aluminum body.

F. Shatter-proof glass globe with aluminum guard, red unless otherwise specified.

G. 3/4 in. conduit connection.

© GEI 2013

PART 3 EXECUTION

3.01 INSTALLATION

A. Install in accordance with manufacturer's written instructions, local codes, applicable requirements of NEC, NECA "Standard of Installation," and recognized industry practices.

B. Control Relays:

1. Provide control relays for general purpose logic circuits.
2. Provide motor starter control relays when load exceeds rating of general purpose control relays.

END OF SECTION

© GEI 2013

HENDERSON GROUNDWATER EXTRACTION
DUPLEX LIFT STATION

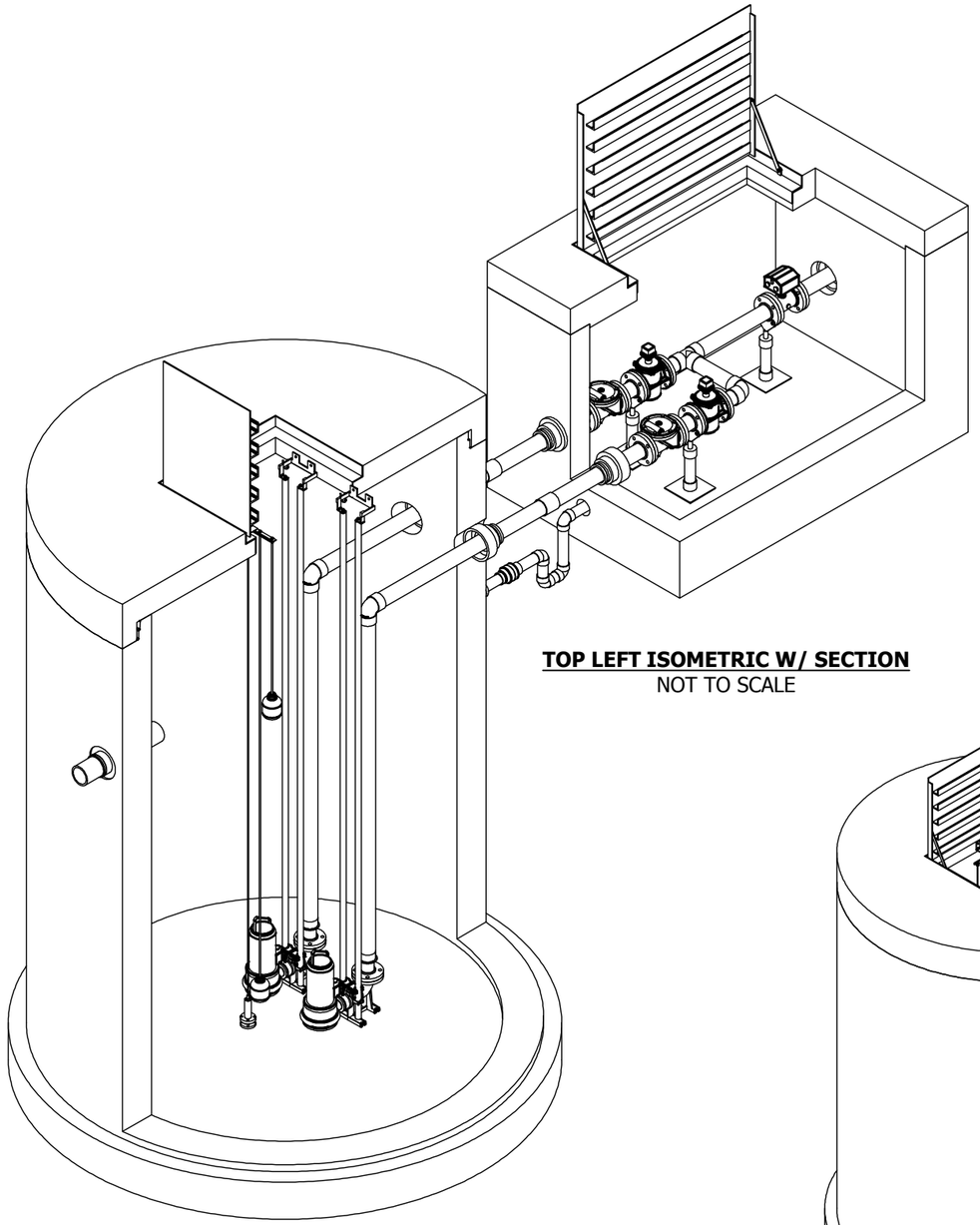

TOP LEFT ISOMETRIC W/ SECTION
NOT TO SCALE

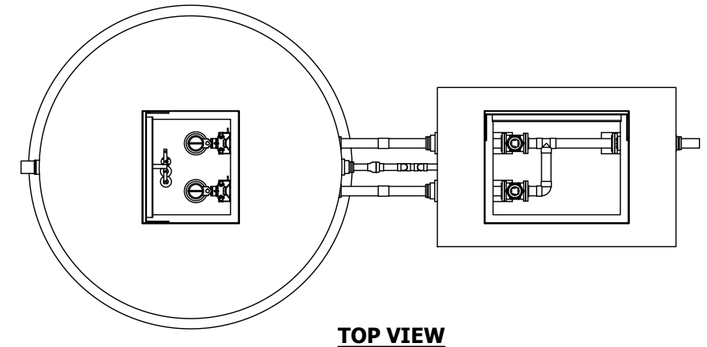

TOP VIEW
NOT TO SCALE

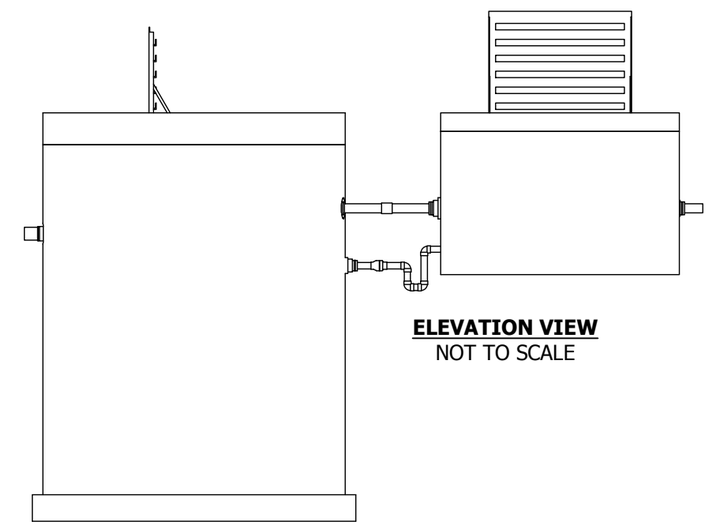

ELEVATION VIEW
NOT TO SCALE

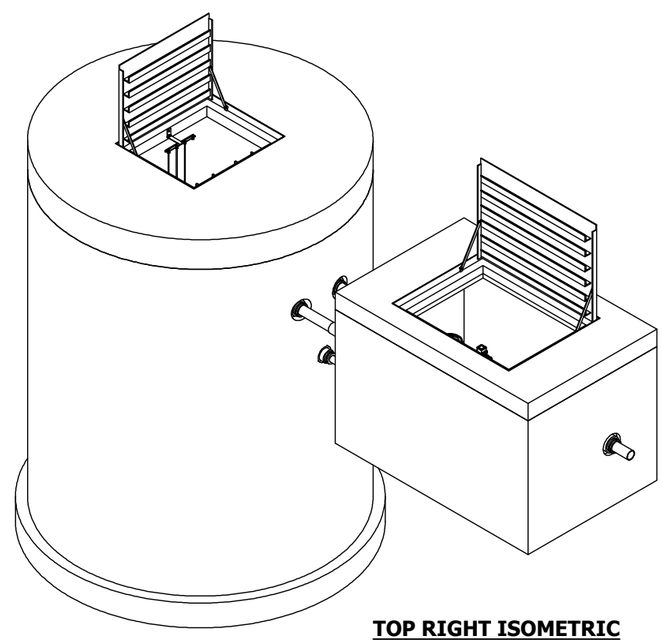

TOP RIGHT ISOMETRIC
NOT TO SCALE

DISCLAIMERS, INCLUDING BUT NOT LIMITED TO:
1) ELEVATIONS SHOWN ON THESE DRAWINGS WERE PROVIDED BY OTHERS. ANY CHANGE GREATER THAN 0.1 FT. REQUIRES ENGINEER APPROVAL.
2) JENSEN PRECAST ASSUMES NO RISK FOR DISCREPANCIES BETWEEN THIS DRAWING AND THE ACTUAL ELEVATIONS/DIMENSIONS IN THE FIELD.
3) THE SPECIFIED PUMPS ARE DESIGNED TO OPERATE AT THE DESIGN POINT SHOWN, BUT THE SYSTEM CHARACTERISTICS HAVE NOT BEEN VERIFIED BY JENSEN PRECAST.
4.) OWNER MUST CONFIRM THE SUITABILITY OF THIS DESIGN PRIOR TO PRODUCTION.
5.) CONTRACTOR MUST PROVIDE ALL INCIDENTAL MATERIAL AND LABOR FOR A COMPLETE OPERATIONAL SYSTEM.
6.) ALL DUCTILE IRON PIPE TO BE CEMENT LINED AND SHOP PRIME COATED. ALL BURIED PIPE MUST BE POLYETHYLENE ENCASED. ALL GASKETS TO BE FULL FACE ⅛" THICK NEOPRENE RUBBER. NUTS AND BOLTS IN WET WELL TO BE STAINLESS STEEL.
7.) CONTRACTOR MUST VERIFY PIPE MATERIAL, LOCATION, SIZE & INVERT ELEVATION OF INLET PIPING. PIPE DESIGNED BY OTHERS.
8.) FOUNDATION, SUBGRADE, AND BACKFILL DESIGNED BY OTHERS.

Copyright Information ©2011 Jensen Precast All Rights Reserved. All materials appearing as Jensen Precast documents and the like are propriety work product and are protected under U.S. copyright and other laws. Unless in conjunction with business conducted with Jensen Precast, any use of Jensen Precast work product without express, written consent is prohibited and recipient is prohibited from distributing any and all work product to non-approved third parties under penalty of civil action.

PROJECT:
GROUNDWATER EXTRACTION STATION
TITLE PAGE

DATE:	DRAWN BY:	SHEET NO:
11.4.13	BMP	1 of 2

JENSEN ENGINEERED SYSTEMS
825 STENERI WAY, SPARKS, NV 89431
JensenEngineeredSystems.com
(855) 468-5600

C:\Vault\Jobs\2013\Groundwater Extraction Station\Groundwater Extraction Station.iam

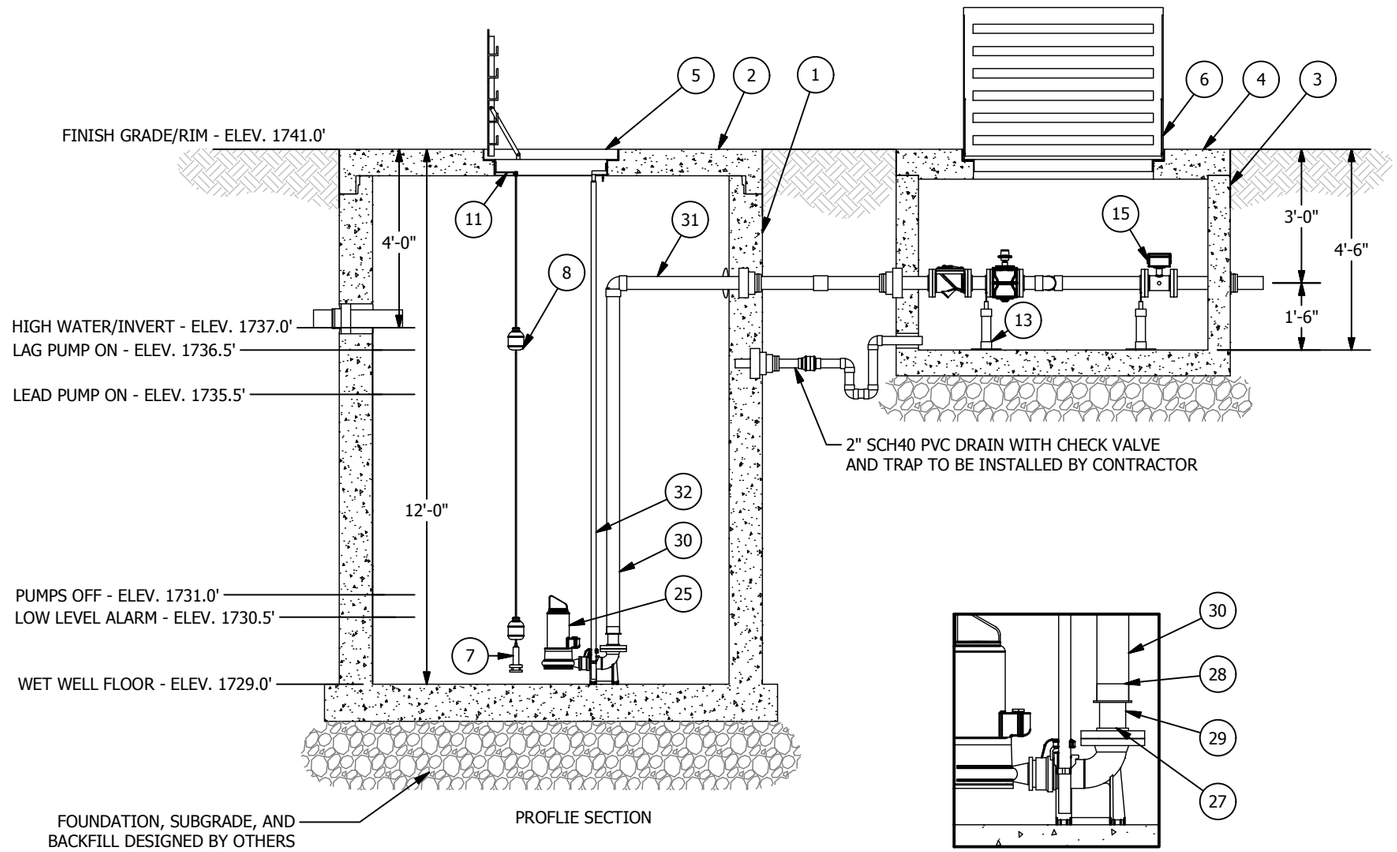

PROFLIE SECTION

CONNECTION DETAIL

PARTS LIST		
ITEM	QTY	DESCRIPTION
1	1	48" DIA JENSEN PRECAST CONCRETE MANHOLE 14'-0" RIM TO INSIDE FLOOR
2	1	48" DIA JENSEN PRECAST CUSTOM CONCRETE FLAT TOP
3	1	48" X 78" JENSEN PRECAST CONCRETE VAULT BASE (4'-6" RIM TO INSIDE FLOOR)
4	1	48" X 78" JENSEN PRECAST CONCRETE VAULT FLAT TOP
5	1	30" x 36" ALUMINUM, SINGLE DOOR ACCESS HATCH FOR PEDESTRIAN 300PSF LIVE LOADING
6	1	36" x 48" ALUMINUM, SINGLE DOOR ACCESS HATCH FOR PEDESTRIAN 300PSF LIVE LOADING
7	1	PRESSURE TRANSDUCER
8	2	INTERNALLY WEIGHTED NON-MECURY MECHANICAL FLOAT BACK-UP FOR REDUNDANT HIGH/LOW LEVEL CONDITION
9	2	3" FLG SWING CHECK VALVE BY VAL-MATIC
10	2	3" FLG ECCENTRIC PLUG VALVE WITH 2" NUT ACTUATOR BY VAL-MATIC
11	1	SS FLOAT BRACKET W/ CORD GRIPS
12	1	INLET PIPING
13	3	ADJUSTABLE PIPE STAND, FLG STYLE, FOR 3 in DIP
14	1	2" SCH40 PVC DRAIN PIPE W/ CHECK VALVE
15	1	3" ELECTROMAGNETIC FLOW METER WITH REMOTE MOUNTED AMPLIFIER BY BADGER
16	3	3" SCH80 PVC 90
17	4	3" SCH80 PVC COUPLING
18	10	3" SCH80 PVC FLG X SLP
19	2	3" SCH80 PVC 0'-6"
20	1	3" SCH80 PVC TEE
21	1	3" SCH80 PVC 1'-2"
22	2	3" SCH80 PVC 2'-0"
23	2	3" SCH80 PVC 2'-6"
24	5	FLEXIBLE PIPE CONNECTOR MEETS ASTM A-923
25	2	HOMA CH436/38/2/3 SUBMERSIBLE PUMP WITH AUTOCOUPLING
26	2	1" 304SS UPPER GUIDE RAIL BRACKET
27	2	2 1//2" SCH80 PVC FLANGE
28	2	3" X 2 1/2" SCH80 PVC BUSHING
29	2	2 1/2" SCH40 PVC 0'-6"
30	2	3" SCH40 PVC 8'-0"
31	2	3" SCH80 PVC 4'-6"
32	4	1" 304SS GUIDE RAIL

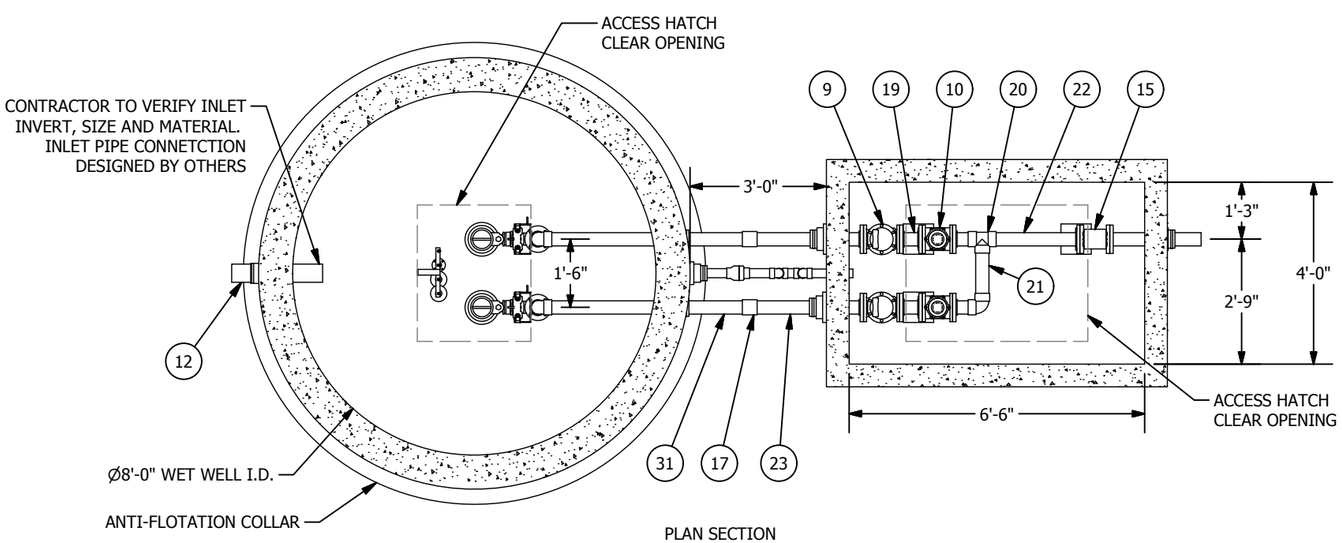

PLAN SECTION

PUMP SYSTEM CHARACTERISTICS		
DESCRIPTION	SINGLE	PARALLEL
DESIGN FLOW	70 gpm	100 gpm
TOTAL DYNAMIC HEAD	63.5 ft	77 ft
STATIC HEAD	45 ft	45 ft
FORCE MAIN LENGTH	1885 ft	1885 ft
MANUFACTURER	HOMA	HOMA
MODEL NUMBER	CH436/38/2/3	CH436/38/2/3
HORSE POWER	3.0 hp	3.0 hp
FULL LOAD AMPS	8.2 Amps	8.2 Amps
MAX PUMP SPEED	3450 rpm	3450 rpm
AVAILBLE POWER SUPPLY	230 Volt	230 Volt
AVAILBLE POWER SUPPLY	3 Phase	3 Phase
NUMBER OF PUMPS	1	2
FREQUENCY	60 Hz	60 Hz

PROJECT SPECIFIC ELEVATIONS	
DESCRIPTION	VALUE (FT)
FINISH GRADE/RIM ELEV.	1741 ft
WET WELL FLOOR ELEV.	1729 ft
TOTAL MANHOLE DEPTH	12 ft
INVERT (IN) DEPTH	4 ft

ACCESS COVER LOADING CRITERIA (SPECIFY ONLY	
PEDESTRIAN LOADING (pedestrian, non-vehicular, uniform 300 lbc./sq/ft/ live load)-Watertight/Gastight	X
INCIDENTAL H-20 LOADING (off street, sidewalk, and low speed, non-impact areas of parking lots, 16,000 lbs./sq.ft. dual wheel live load, 0% impact)-Watertight/gastight	
H-20 FULL TRAFFIC LOADING (in street, 16,000 lbs./sq.ft. dual wheel live load, 30% impact)	

Copyright Information ©2011 Jensen Precast All Rights Reserved. All materials appearing as Jensen Precast documents and the like are propriety work product and are protected under U.S. copyright and other laws. Unless in conjunction with business conducted with Jensen Precast, any use of Jensen Precast work product without express, written consent is prohibited and recipient is prohibited from distributing any and all work product to non-approved third parties under penalty of civil action.

PROJECT:
GROUNDWATER EXTRACTION STATION
MECHANICAL DRAWINGS

DATE:	DRAWN BY:	SHEET NO:
11.4.13	BMP	2 of 2

JENSEN ENGINEERED SYSTEMS
825 STENERI WAY, SPARKS, NV 89431
JensenEngineeredSystems.com
(855) 468-5600

Technical Information

CH436/38/2/3

Operating data

Flow	50 US g.p.m.
Head	73 ft
Shaft power P2	3.29 hp
Pump efficiency	34.1 %
Required pump NPSH	
Pumpe type	Parallel operation
No. of pumps	2
Fluid	Drainage water

Pump

Pump Code	CH436/38/2/3
Impeller	Multi vane impeller
Impeller size	$4^{9}/_{16}$"
Solid size	0 inch
Discharge port	2" - 11 ½ NPT
Suction port	

Motor

Rated voltage	230/ 460 V
Frequency	60 Hz
Rated power P2	3.0 hp
Rated speed	3450 rpm
Number of poles	2
Efficiency	78 %
Rated current	8.2 / 4,1 A
Degree of protection	IP 68

Materials

Motor housing	Stainless steel AISI 316
Impeller	Stainless steel AISI 316
Pump housing	Stainless steel AISI 316
Motor shaft	Stainless steel
Bolts	Stainless steel
O-Rings	FPM, Viton
Mechanical seal on medium side	SiC / SiC, Viton
Mechanical seal on motor side	SiC / SiC, Viton
Lower Bearing	Double row angular ball bearing
Upper Bearing	Deep Groove Ball Bearing

Testnorm: **P2>10kW, ISO9906 Grade 2B**
P2<10kW, ISO9906 Sect. 4.4.2

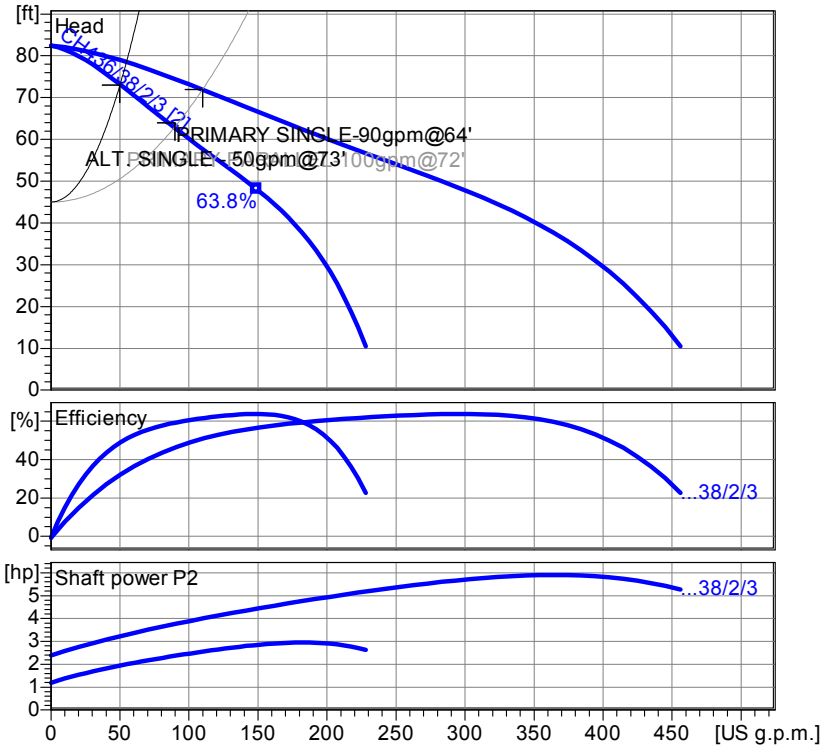

Wet well installation with coupling kit (28-38)
Dimensions in inch, letters see table

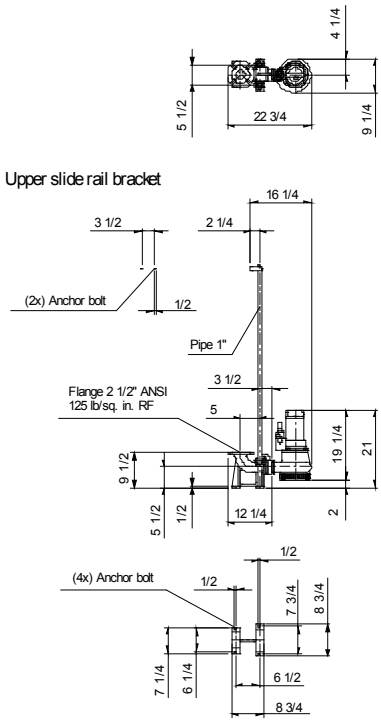

Table Dimensions
(inch)

2.0.1 - 01.02.2013 (Build 59)

Project	Project no.:	Created by:	Page:	Date:
			1	2013-11-12

Performance Curve

CH436/38/2/3

Impeller					
Impeller type: Multi vane impeller	Solid size Ø: 0 inch	Max. Ø: $4^{15}/_{16}$"	Min. Ø: $4^{1}/_{8}$"	Sel. Ø: $4^{9}/_{16}$"	

Operating data				
Speed: **3450 rpm**	Frequency: **60 Hz**	Duty point: **Q =50 US g.p.m. H =73 ft**	Shaft power P2: **3.29 hp**	Discharge port: **2" - 11 ½ NPT**

Power data referred to: Water, clean [100%] ; 68°F; 62.322lb/ft³; 1.0818E-5ft²/s

Testnorm: **P2>10kW, ISO9906 Grade 2B**
P2<10kW, ISO9906 Sect. 4.4.2

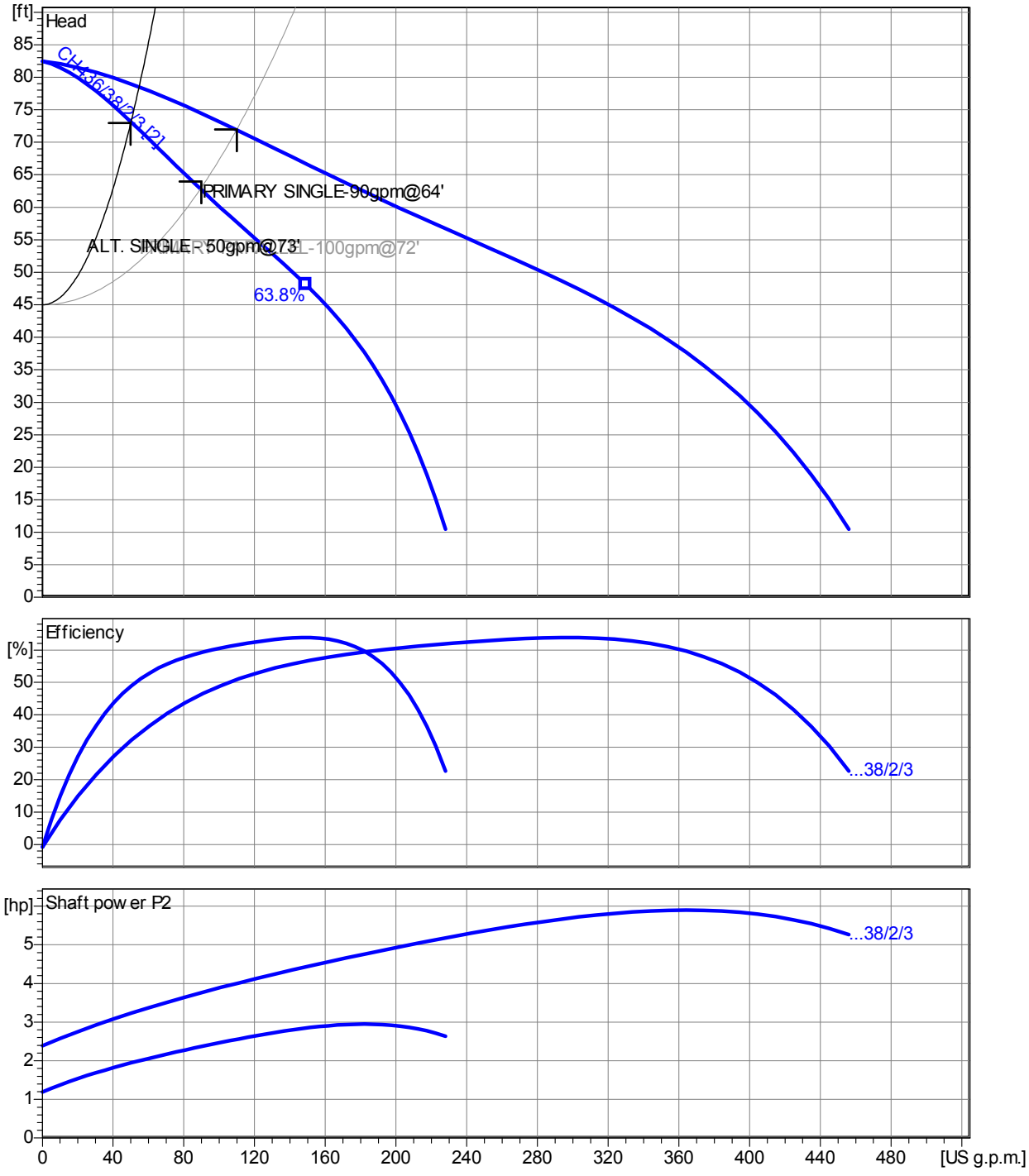

2.0.1 - 01.02.2013 (Build 59)

Project	Project no.:	Created by:	Page:	Date:
			2	2013-11-12

Dimensions

CH436/38/2/3

Wet well installation with coupling kit (28-38)
letters see table

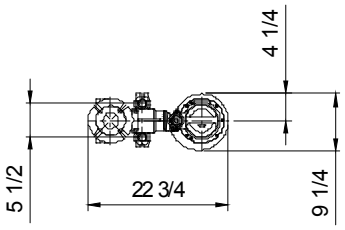

Upper slide rail bracket

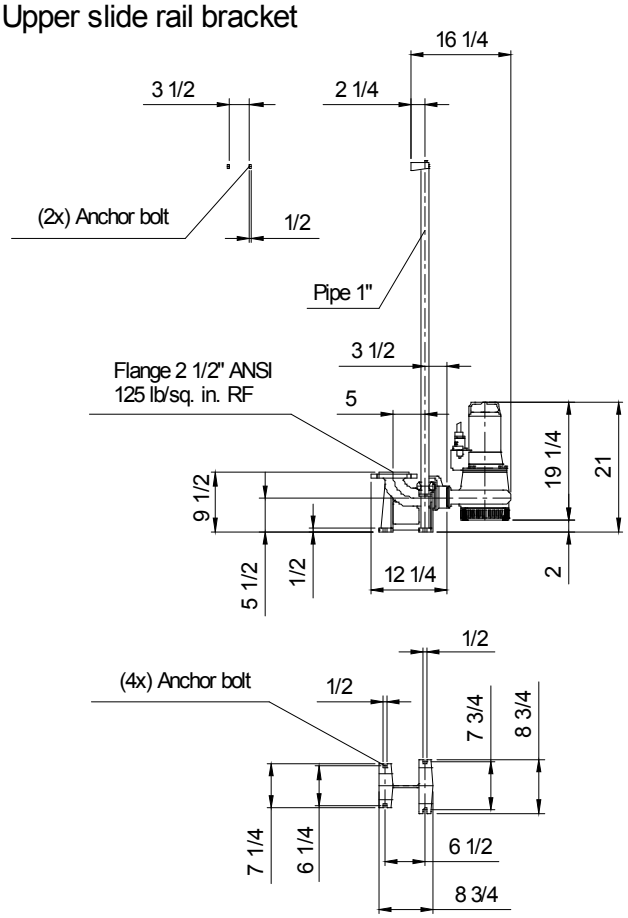

Table Dimensions **(inch)**

2.0.1 - 01.02.2013 (Build 59)

Project	Project no.:	Created by:	Page:	Date:
			3	2013-11-12

Technical Data

CH436/38/2/3

Operating data					
Flow	**50**	**US g.p.m.**	**Head**	**73**	**ft**
Shaft power P2	**3.3**	**hp**	**Static head**	**45**	**ft**
Pump efficiency	**34.1**	**%**	**Required pump NPSH**		**ft**
Pumpe type	Parallel operation		No. of pumps	2	
Fluid	Drainage water		Temperature	68	°F
Density	62.31	lb/ft³	Kin. viscosity	1.077E-5	ft²/s

Pump						
Pump Code	CH436/38/2/3		Speed		3450	rpm
Suction port			Head	Max.	82.5	ft
Discharge port	2" - 11 ½ NPT			Min.	10.5	ft
Impeller type	Multi vane impeller		Flow	Max.	228.1	US g.p.m.
Solid size	0	inch	Pump efficiency max.		63.8	%
Impeller Ø	4.57	inch	Required rated power max. P2		3.0	hp

Motor						
Motor design	Submersible motor		Insulation class		H	
Motor name	CAM122.3,8/2/3		Degree of protection		IP 68	
Frequency	60	Hz	Temperature class		T4	
Rated power P1	3.8	hp	Ex			
Rated power P2	3.0	hp	Explosion protection			
Rated speed	3450	rpm	Efficiency at % rated power	100%	78	%
Rated voltage	230 / 460 V	3~		75%		%
Rated current	8.2 / 4,1	A		50%		%
Starting current, direct starting	0.0	A	cos phi at % rated power	100%	0.86	
Starting current, star-delta	0	A		75%		
Starting mode	Directly			50%		
Power cable	6G1,5		Control cable			
Type of power cable	H07RN-F PLUS		Type of control cable			
Cable length	32.809 ft		Service factor		1.15	
Shaft seal	Mechanical seal on medium side		SiC / SiC, Viton			
	Mechanical seal on motor side		SiC / SiC, Viton			
Bearing	Lower Bearing		Double row angular ball bearing			
	Upper Bearing		Deep Groove Ball Bearing			
Remarks						

Materials / Weight			
Motor housing	Stainless steel AISI 316	Bolts	Stainless steel
Pump housing	Stainless steel AISI 316	O-Rings	FPM, Viton
Impeller	Stainless steel AISI 316		
Motor shaft	Stainless steel		
Weight aggregat	88.183 lb		

2.0.1 - 01.02.2013 (Build 59)

Project	Project no.:	Created by:	Page:	Date:
			4	2013-11-12

Attachment 5

Supplemental Drawings

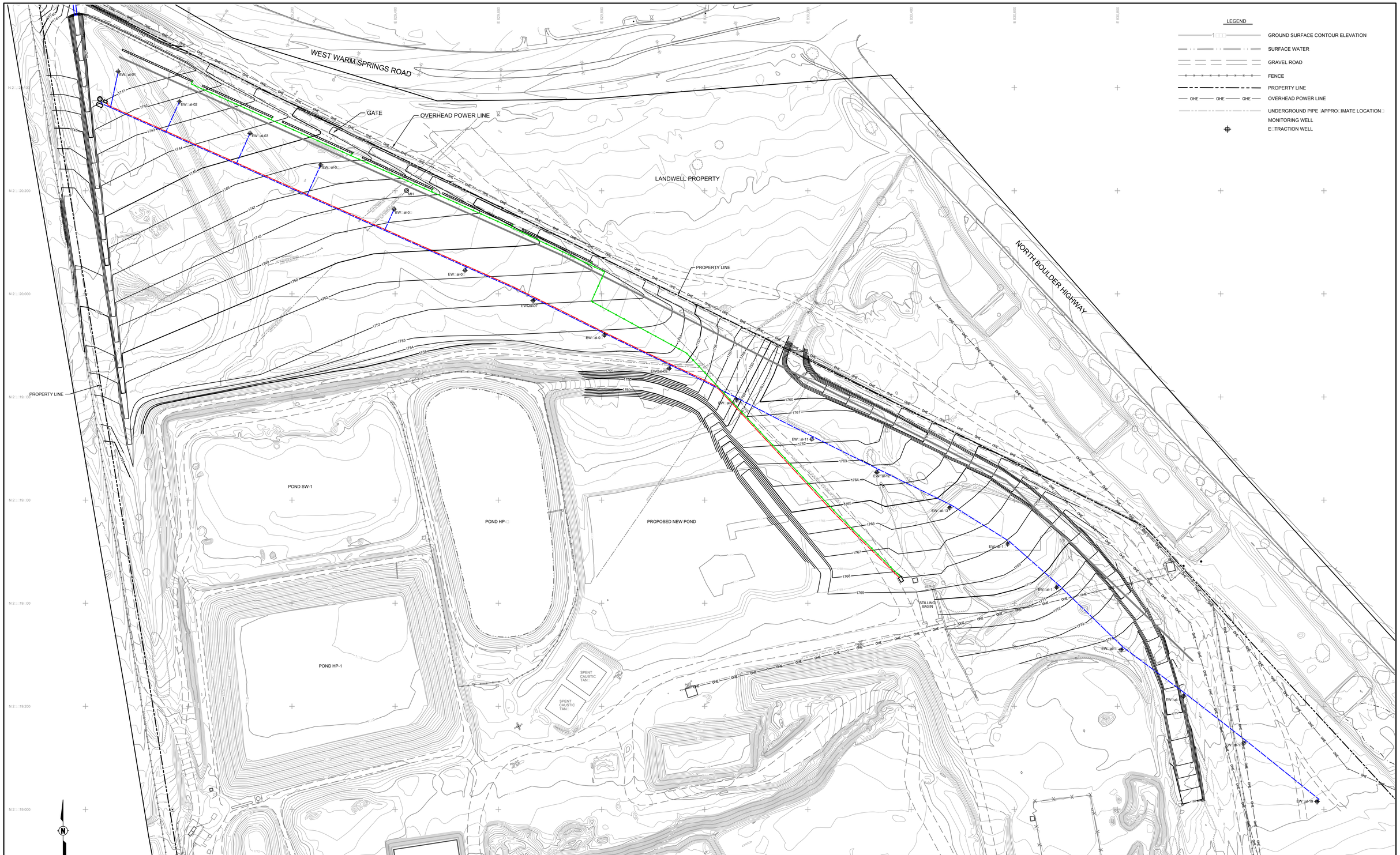

Attention:

0 1"

If this scale bar does not measure 1" then drawing is not original scale.

NO.	DATE	ISSUE/REVISION	APP
0	12/2012	ISSUED FOR CONSTRUCTION	MGR

Designed: M. Ruetten
Checked: M. Ruetten
Drawn: D. Curtin
Submittal Date: 12/2012

GEI Consultants
3129 Voyager Drive
Green Bay, Wisconsin 54311
920-497-2758

TITANIUM METALS CORPORATION
1201 NORTH WATER STREET
BLACK MOUNTAIN INDUSTRIAL CENTER
HENDERSON, NEVADA 89015

GEI Project 132300

GROUNDWATER REMEDIATION EXTRACTION SYSTEM

EXISTING CONDITIONS WITH FINAL GRADES AND EXTRACTION SYSTEM

DWG. NO. FG-1

SHEET NO. 2

J:\Landfills\Timet\Meeting-Discussion\Final-Grades: Updated: 12-07-12

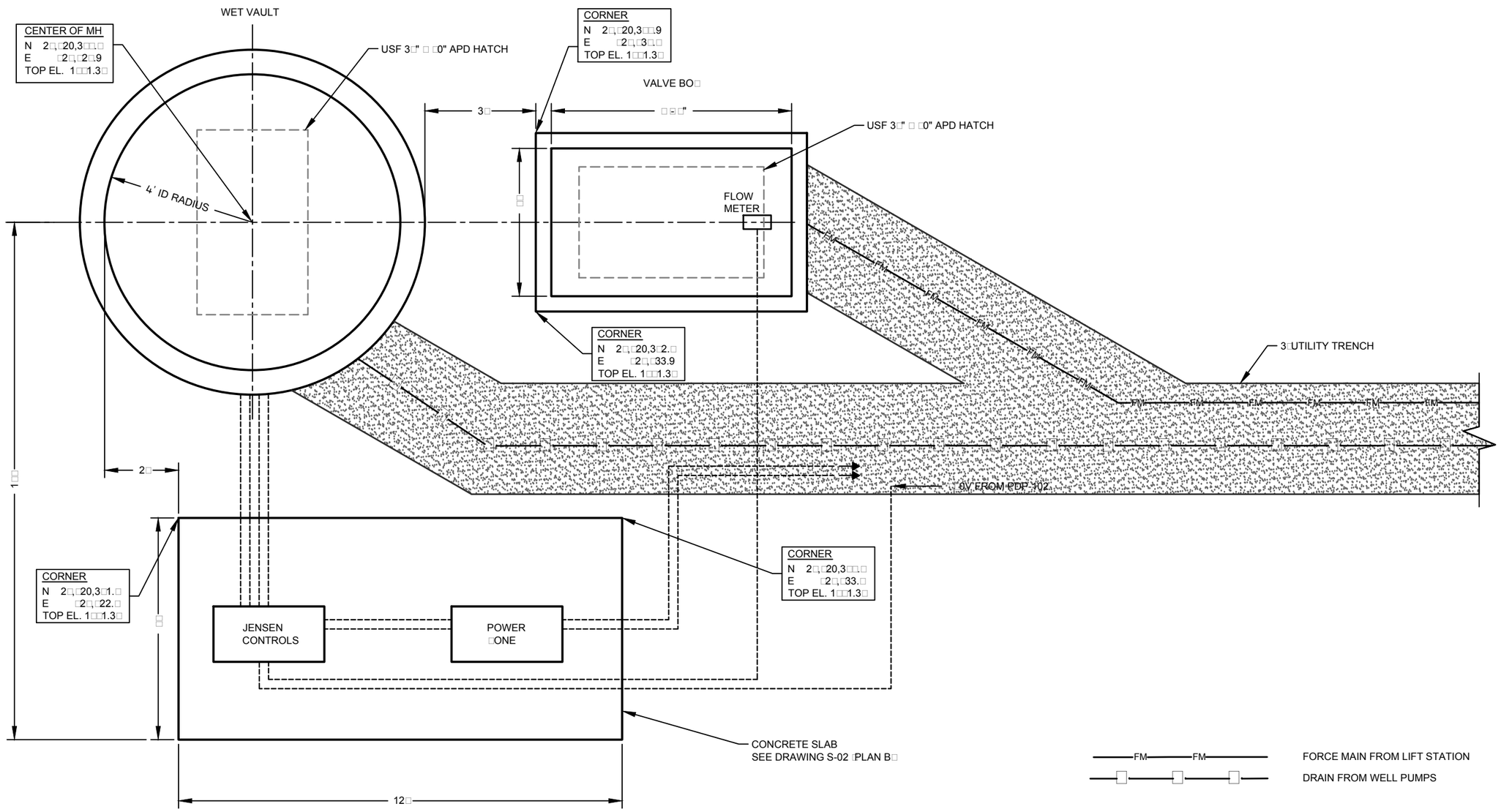

LIFT STATION POWER AND CONTROL SLAB LAYOUT

SCALE: 1" □3□

TITANIUM METALS CORPORATION 1□1 NORTH WATER STREET BLAC□ MOUNTAIN INDUSTRIAL CENTER HENDERSON, NEVADA □901□	GEI Consultants	GROUNDWATER REMEDIATION E□TRACTION SYSTEM
	Project 13230□0	January 201□ Fig. 1

J:\Landfills\Timet\Recharge□Trenches\Extraction□System□Rev-1\Lift-Station□Power□□Control-Slab□Layout

HENDERSON GROUNDWATER EXTRACTION
DUPLEX LIFT STATION

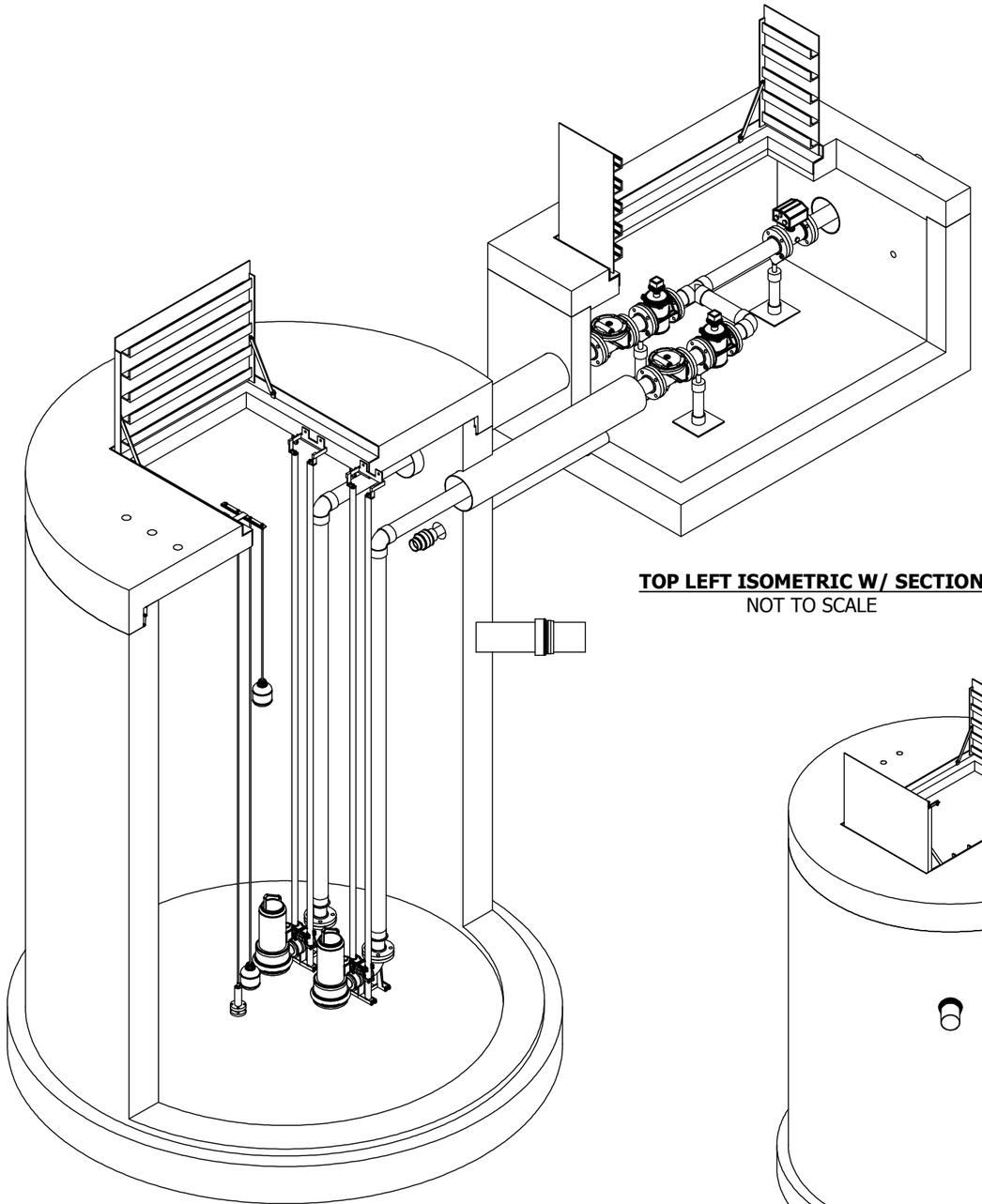

TOP LEFT ISOMETRIC W/ SECTION
NOT TO SCALE

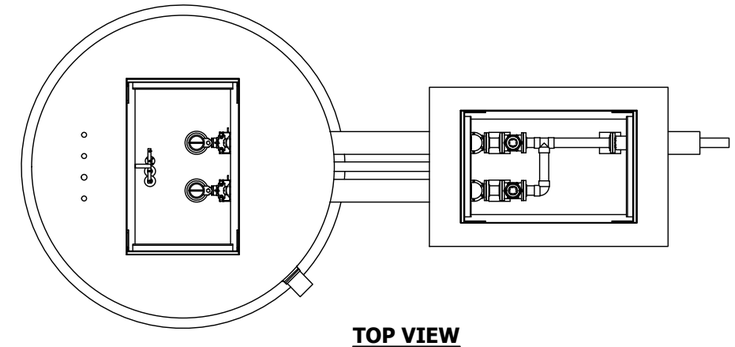

TOP VIEW
NOT TO SCALE

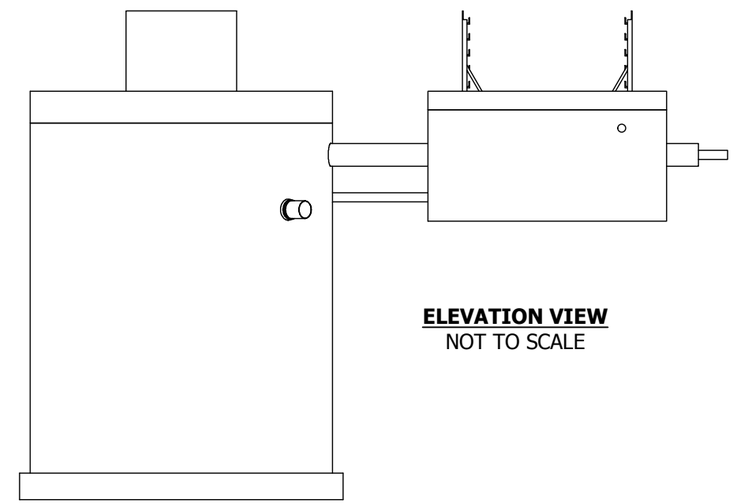

ELEVATION VIEW
NOT TO SCALE

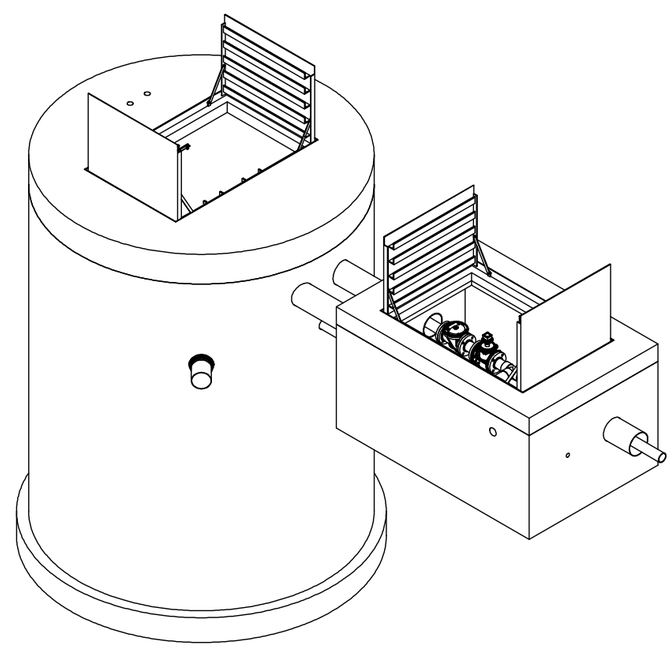

TOP RIGHT ISOMETRIC
NOT TO SCALE

DISCLAIMERS, INCLUDING BUT NOT LIMITED TO:

1) ELEVATIONS SHOWN ON THESE DRAWINGS WERE PROVIDED BY OTHERS. ANY CHANGE GREATER THAN 0.1 FT. REQUIRES ENGINEER APPROVAL.
2) JENSEN PRECAST ASSUMES NO RISK FOR DISCREPANCIES BETWEEN THIS DRAWING AND THE ACTUAL ELEVATIONS/DIMENSIONS IN THE FIELD.
3) THE SPECIFIED PUMPS ARE DESIGNED TO OPERATE AT THE DESIGN POINT SHOWN, BUT THE SYSTEM CHARACTERISTICS HAVE NOT BEEN VERIFIED BY JENSEN PRECAST.
4.) OWNER MUST CONFIRM THE SUITABILITY OF THIS DESIGN PRIOR TO PRODUCTION.
5.) CONTRACTOR MUST PROVIDE ALL INCIDENTAL MATERIAL AND LABOR FOR A COMPLETE OPERATIONAL SYSTEM.
6.) ALL GASKETS TO BE FULL FACE ⅛" THICK NEOPRENE RUBBER. NUTS AND BOLTS IN WET SERVICE TO BE STAINLESS STEEL.
7.) CONTRACTOR MUST VERIFY PIPE MATERIAL, LOCATION, SIZE & INVERT ELEVATION OF INLET PIPING. PIPE DESIGNED BY OTHERS.
8.) FOUNDATION, SUBGRADE, AND BACKFILL DESIGNED BY OTHERS.

Copyright Information ©2011 Jensen Precast All Rights Reserved. All materials appearing as Jensen Precast documents and the like are proprietary work product and are protected under U.S. copyright and other laws. Unless in conjunction with business conducted with Jensen Precast, any use of Jensen Precast work product without express, written consent is prohibited and recipient is prohibited from distributing any and all work product to non-approved third parties under penalty of civil action.

PROJECT:
GROUNDWATER EXTRACTION STATION
TITLE PAGE

DATE:	DRAWN BY:	SHEET NO:
12.17.13	BMP	1 of 5

JENSEN ENGINEERED SYSTEMS
825 STENERI WAY, SPARKS, NV 89431
JensenEngineeredSystems.com
(855) 468-5600

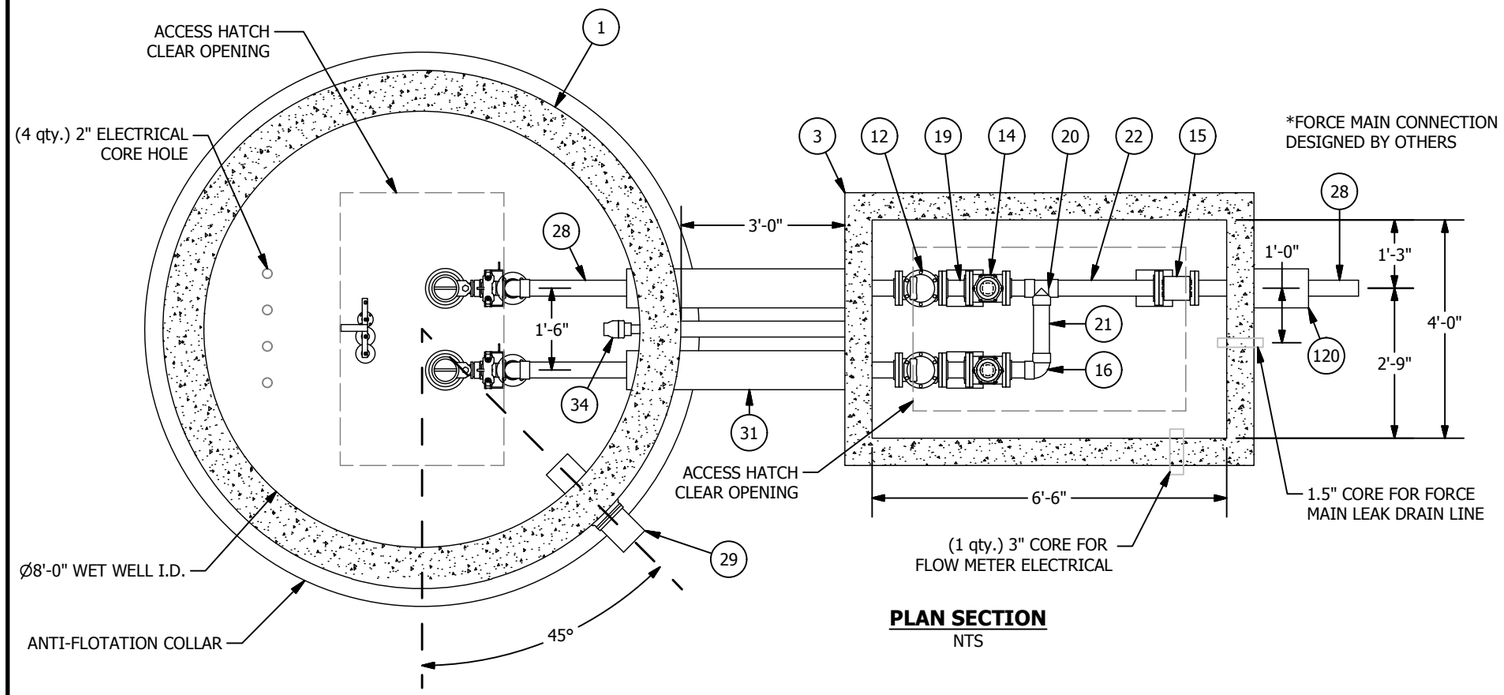

PLAN SECTION
NTS

PARTS LIST		
ITEM	QTY	DESCRIPTION
1	1	96" DIA JENSEN PRECAST CONCRETE MANHOLE 12'-0" RIM TO INSIDE FLOOR
2	1	96" DIA JENSEN PRECAST CUSTOM CONCRETE FLAT TOP
3	1	48" X 78" JENSEN PRECAST CONCRETE VAULT BASE (3'-6" RIM TO INSIDE FLOOR)
4	1	48" X 78" JENSEN PRECAST CONCRETE VAULT FLAT TOP
5	1	PRESSURE TRANSDUCER
6	2	36" X 60" ALUMINUM, ANGLE FRAME, DOUBLE DOOR ACCESS HATCH FOR PEDESTRIAN 300PSF LIVE LOADING
7	2	HOMA CH436/38/2/3 STAINLESS STEEL SUBMERSIBLE PUMP WITH AUTOCOUPLING (3.0 HP, 4.1A, 460V, 3PH, 60HZ)
8	2	1" 316SS UPPER GUIDE RAIL BRACKET
9	4	1" 316SS GUIDE RAIL
10	2	INTERNALLY WEIGHTED NON-MECURY MECHANICAL FLOAT BACK-UP FOR REDUNDANT HIGH/LOW LEVEL CONDITION
11	1	SS FLOAT BRACKET W/ CORD GRIPS
12	2	3" FLG SWING CHECK VALVE BY VAL-MATIC
13	3	ADJUSTABLE PIPE STAND, FLG STYLE, FOR 3 in DIP
14	2	3" FLG ECCENTRIC PLUG VALVE WITH 2" DIRECT NUT ACTUATOR BY VAL-MATIC
15	1	3" ELECTROMAGNETIC FLOW METER WITH METER MOUNTED AMPLIFIER BY BADGER METER
16	3	3" SCH80 PVC 90
17	4	3" SCH80 PVC COUPLING
18	10	3" SCH80 PVC FLG X SLP
19	4	3" SCH80 PVC 0'-6"
20	1	3" SCH80 PVC TEE
21	1	3" SCH80 PVC 1'-2"
22	2	3" SCH80 PVC 2'-0"
23	2	3" SCH80 PVC 2'-6"
24	2	2 1//2" SCH80 PVC FLANGE
25	2	3" X 2 1/2" SCH80 PVC BUSHING
26	2	2 1/2" SCH40 PVC 0'-6"
27	2	3" SCH40 PVC 8'-0"
28	3	3" SCH80 PVC PIPE 3'-0"
29	1	6" HDPE DR17 (6.636" O.D.) INLET PIPE BY OTHERS
30	1	FLEXIBLE PIPE CONNECTOR MEETING ASTM A923 FOR 6" HDPE INLET PIPE
31	3	8" HDPE PIPE SLEEVE, SUPPLIED BY OTHERS
32	1	1.5" SCH80 PVC DRAIN W/ CHECK VALVE
33	1	3" PIPE SLEEVE, SUPPLIED BY OTHERS
34	1	1.5" SCH80 PVC TRUE UNION BALL CHECK VALVE

PUMP SYSTEM CHARACTERISTICS		
DESCRIPTION	SINGLE	PARALLEL
DESIGN FLOW	70 gpm	100 gpm
TOTAL DYNAMIC HEAD	63.5 ft	77 ft
STATIC HEAD	45 ft	45 ft
FORCE MAIN LENGTH	1885 ft	1885 ft
MANUFACTURER	HOMA	HOMA
MODEL NUMBER	CH436/38/2/3	CH436/38/2/3
HORSE POWER	3.0 hp	3.0 hp
FULL LOAD AMPS	4.1 Amps	4.1 Amps
MAX PUMP SPEED	3450 rpm	3450 rpm
AVAILBLE POWER SUPPLY	460 Volt	460 Volt
AVAILBLE POWER SUPPLY	3 Phase	3 Phase
NUMBER OF PUMPS	1	2
FREQUENCY	60 Hz	60 Hz

ACCESS COVER LOADING CRITERIA (SPECIFY ONLY	
PEDESTRIAN LOADING (pedestrian, non-vehicular, uniform 300 lbc./sq/ft/ live load)-Watertight/Gastight	X
INCIDENTAL H-20 LOADING (off street, sidewalk, and low speed, non-impact areas of parking lots, 16,000 lbs./sq.ft. dual wheel live load, 0% impact)-Watertight/gastight	
H-20 FULL TRAFFIC LOADING (in street, 16,000 lbs./sq.ft. dual wheel live load, 30% impact)	

PROJECT SPECIFIC ELEVATIONS	
DESCRIPTION	VALUE (FT)
FINISH GRADE/RIM ELEV.	1741 ft
WET WELL FLOOR ELEV.	1729 ft
TOTAL MANHOLE DEPTH	12 ft
INVERT (IN) DEPTH	4 ft

DISCLAIMERS, INCLUDING BUT NOT LIMITED TO:
1) ELEVATIONS SHOWN ON THESE DRAWINGS WERE PROVIDED BY OTHERS. ANY CHANGE GREATER THAN 0.1 FT. REQUIRES ENGINEER APPROVAL.
2) JENSEN PRECAST ASSUMES NO RISK FOR DISCREPANCIES BETWEEN THIS DRAWING AND THE ACTUAL ELEVATIONS/DIMENSIONS IN THE FIELD.
3) THE SPECIFIED PUMPS ARE DESIGNED TO OPERATE AT THE DESIGN POINT SHOWN, BUT THE SYSTEM CHARACTERISTICS HAVE NOT BEEN VERIFIED BY JENSEN PRECAST.
4.) OWNER MUST CONFIRM THE SUITABILITY OF THIS DESIGN PRIOR TO PRODUCTION.
5.) CONTRACTOR MUST PROVIDE ALL INCIDENTAL MATERIAL AND LABOR FOR A COMPLETE OPERATIONAL SYSTEM.
6.) ALL GASKETS TO BE FULL FACE ⅛" THICK NEOPRENE RUBBER. NUTS AND BOLTS IN WET SERVICE TO BE STAINLESS STEEL.
7.) CONTRACTOR MUST VERIFY PIPE MATERIAL, LOCATION, SIZE & INVERT ELEVATION OF INLET PIPING. PIPE DESIGNED BY OTHERS.
8.) FOUNDATION, SUBGRADE, AND BACKFILL DESIGNED BY OTHERS.

Copyright Information ©2011 Jensen Precast All Rights Reserved. All materials appearing as Jensen Precast documents and the like are proprietary work product and are protected under U.S. copyright and other laws. Unless in conjunction with business conducted with Jensen Precast, any use of Jensen Precast work product without express, written consent is prohibited and recipient is prohibited from distributing any and all work product to non-approved third parties under penalty of civil action.

PROJECT:
GROUNDWATER EXTRACTION STATION
MECHANICAL DRAWINGS

DATE:	DRAWN BY:	SHEET NO:
12.17.13	BMP	2 of 5

JENSEN ENGINEERED SYSTEMS
825 STENERI WAY, SPARKS, NV 89431
JensenEngineeredSystems.com
(855) 468-5600

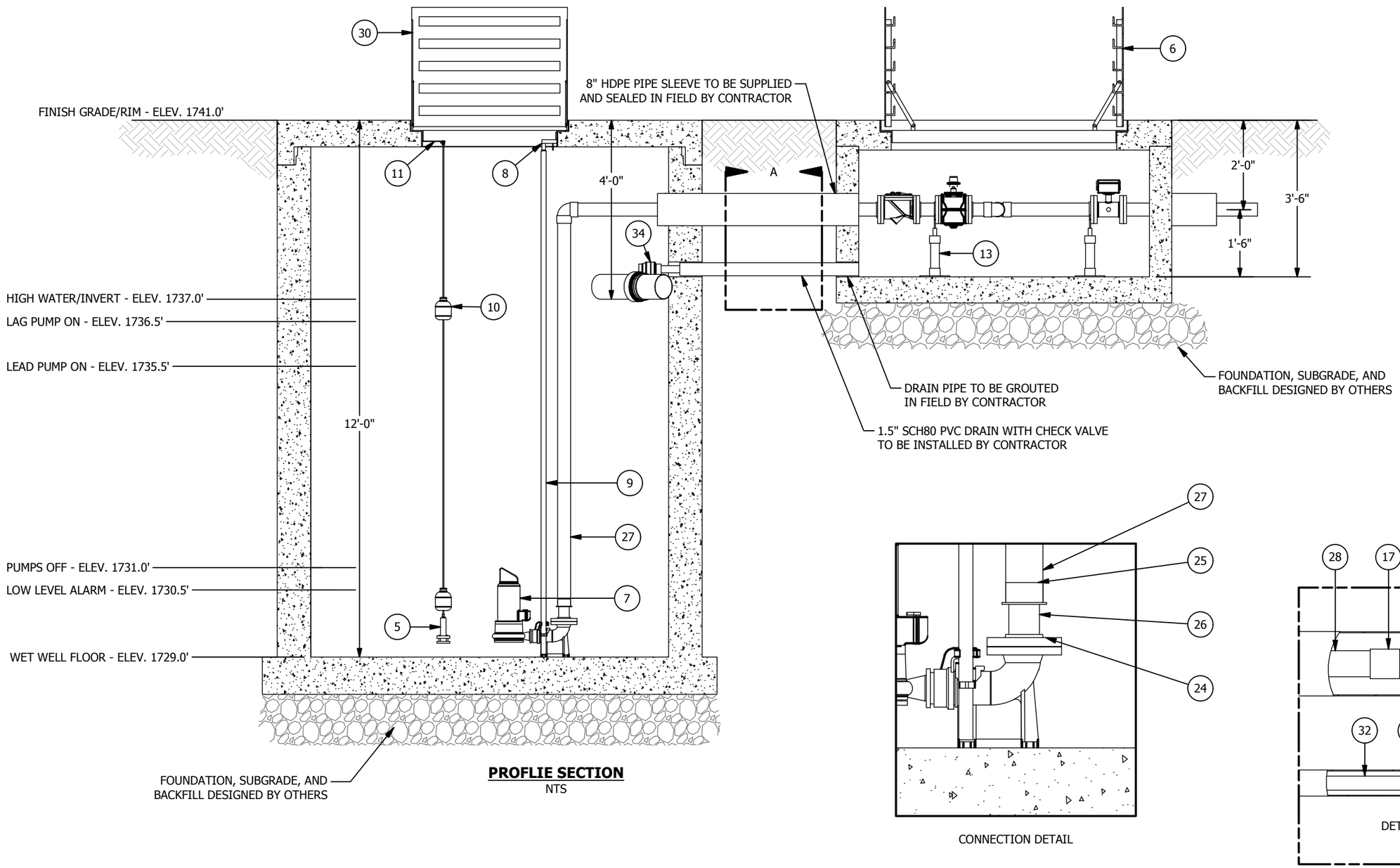

PROFLIE SECTION
NTS

CONNECTION DETAIL

DETAIL A

Copyright Information ©2011 Jensen Precast All Rights Reserved. All materials appearing as Jensen Precast documents and the like are propriety work product and are protected under U.S. copyright and other laws. Unless in conjunction with business conducted with Jensen Precast, any use of Jensen Precast work product without express, written consent is prohibited and recipient is prohibited from distributing any and all work product to non-approved third parties under penalty of civil action.

PROJECT:
GROUNDWATER EXTRACTION STATION
MECHANICAL DRAWINGS

DATE:	DRAWN BY:	SHEET NO:
12.17.13	BMP	3 of 5

JENSEN ENGINEERED SYSTEMS
825 STENERI WAY, SPARKS, NV 89431
JensenEngineeredSystems.com
(855) 468-5600

C:\Vault\Jobs\2013\100913 Groundwater Extraction Station\Groundwater Extraction Station.iam

PUMP STATION SPECIFICATIONS

PART 1 - GENERAL

1.1 SECTION INCLUDES

A. Site assembled and tested precast wastewater utility pumping stations, including:

1. Precast concrete wet-well and valve vault.
2. Pumps and mountings.
3. Control panel.
4. Piping/Valves/Fittings integral to pumping station.
5. Pumping station design services.

1.2 ACTION SUBMITTALS

A. Product Data: Provide manufacturer's technical data including station capacities and operating characteristics.

B. Pump Performance Curves.

C. Shop Drawings: Show fabrication and installation details.

1.3 CLOSEOUT SUBMITTALS

A. Field Reports: Provide quality-control test reports documenting station operation performance.

B. Operation and Maintenance Manual: Include approved submittals and schedule for maintenance requirements.

1.4 QUALITY ASSURANCE

A. Manufacturer Qualifications: NPCA-certified plant, with experience and demonstrated capability to produce work specified in this Section

B. Electrical Components, Devices, and Accessories: Listed and labeled as defined in NFPA 70, Article 100, by a testing agency acceptable to authorities having jurisdiction, and marked for intended use.

1.5 WARRANTY

A. Manufacturer's Warranty: Manufacturer's standard form in which manufacturer agrees to repair or replace components of pumping stations that fail in materials or workmanship within specified warranty period.

1. Failures include, but are not limited to, the following:
   a. Structural failures including precast concrete structures, hatches, and other accessories.
   b. Faulty operation of pumps, controls, or pumping and piping system accessories.
   c. Deterioration of metals, metal finishes, and other materials beyond normal use.
2. Warranty Period for Precast Concrete Structures: One year from date of Substantial Completion.
3. Warranty Period for Pumps: One year from date of Substantial Completion.
4. Warranty Period for Control Panel: One year from date of Substantial Completion.

PART 2 - PRODUCTS

2.1 MANUFACTURER

A. Basis of Design: Provide site assembled precast wastewater utility pumping station, including specified controls, pumps, valves, internal piping, and precast concrete well by manufactured and furnished by **Jensen Precast**, Las Vegas, NV, (775) 352-6367, bpetring@jensenprecast.com, www.jensenengineeredsystems.com.

2.2 PRECAST CONCRETE STRUCTURES

A. Round Precast Concrete Wells: ASTM C 890, precast, reinforced concrete.

1. Wall Thickness, Base Thickness, and Cover Slab shall be designed by the Precast Concrete Company and Stamped by a licensed Professional Engineer
2. Flexible Resilient Pipe Connectors: ASTM C 923.

B. Precast Concrete Valve Vault: ASTM C 890, precast, reinforced concrete.

1. Base Section: 6-inch minimum thickness for floor slab and 6-inch minimum thickness for walls.
2. Flexible Resilient Pipe Connectors: ASTM C 923.

2.3 PRECAST CONCRETE MATERIALS AND MIX DESIGN

A. General: Precast concrete according to ACI 318.

B. Concrete Design Mix: 4,000 psi minimum, with 0.45 maximum water/cementitious materials ratio.

2.4 ACCESS DOORS AND FRAMES

A. Wet Well Access Door: Aluminum Angle Frame, Double Door Hatch, Pedestrian 300psf live loading, 316ss hardware, automatic hold-open are with red vinyl grip, flush lift handle, nut rails on front and back.

B. Valve Vault Access Door: Aluminum Angle Frame, Double Door Hatch, Pedestrian 300psf live loading, 316ss hardware, automatic hold-open are with red vinyl grip, flush lift handle, nut rails on front and back.

2.5 WET-WELL ACCESSORIES

A. Guide Rail Assembly: Dual guide rail assembly, stainless steel, Type 316, with pump guide brackets configured to match requirements of selected pumps. Single guide rail assembly will not be accepted.

B. Flexible Resilient Pipe Connectors: Flexible connector, ASTM C 923.

C. Liners:

1. A protective liner shall be used whenever a precast concrete manhole or structure is used in a sanitary or light industrial sewer system in which the potential for corrosive attack to the concrete substrate exists.
2. The liner shall be the Dura Plate 100 liner as manufactured by A-LOK® Products, Inc., Tullytown, PA or approved equal.
3. The design of the liner shall provide a corrosion protective barrier permanetly embeded to the inside well of the structure.

2.6 SUBMERSIBLE WASTEWATER NON CLOG PUMPS

A. Scope: Furnish and install 2 qty HOMA Model CH436/38/2/3 Submersible, stainless steel, each consisting of a single-stage, non-clog centrifugal pump, close coupled by a common shaft to a squirrel cage, induction type electric motor, assembled in a single body, watertight aggregate, suitable for wet well.

B. Pump Design: The liquid end shall be a centrifugal pump with a short overhang shaft, shared by the impeller and motor, will have generous shoulder fillet radii to minimize stress concentration and fatigue. The shaft shall be supported by anti-friction bearings. The lower bearing shall be a deep groove ball bearing, axially retained to sustain both axial and radial loads. The upper bearing shall be a deep groove ball bearing, axially floating to sustain radial loads only. Power cables shall enter the junction chamber through the top motor cap. The cable entry design shall ensure a watertight and submersible seal. The entry shall include an elastomer grommet that is flank by washers. The junction chamber shall be isolated from the motor between the stator leads and cable leads shall be mated with threaded posts that are permanently attached to terminal board. Watertight integrity shall additionally be maintained by a mechanical shaft seal and by O Rings, confined within closely fitted, high surface quality rabbet joints, compressed to the prescribed dimension only by metal-to-metal contact.

Iron.

C. Guide Rail Base Assembly: An AutoCoupling assembly shall be employed to eliminates the need for entering the wet well to service pumps. The system shall allow the lowering of the pump unit(s) into the well along rigid guide pipes, resulting in a self-engaging, firm, leakproof coupling of the volute outlet to a receiving Base anchored to the floor which forms the discharge pipe connection. To assure a leakproof junction between movable and stationary components, a resilient seal ring shall be employed which is easily replaceable as part of the pump assembly, is axially and evenly compressed upon contact. Metal-to-metal contact faces shall not be allowed. Once seated, the pump shall be entirely supported by the AutoCoupling Base, without any reliance on additional supports.

D. Pump Construction: Major castings: Stainless Steel AISI 316 - Shaft: AISI 430F Stainless Steel - Fasteners: AISI 304 Stainless Steel - All O-Rings: FPM, Viton - Shaft Seals: Impeller Side; Silicon Carbide/Silicon Carbide, Viton; Motor Side; Silicon Carbide/Silicon Carbide, Viton

E. Impeller: Impeller will be cast as one piece and shall be of the following design: Single-vane open, radial non-clog (Stainless Steel AISI 316 construction) Impellers shall be statically and dynamically balanced, to assure that vibration amplitudes, measured at the level of the upper bearing while operating in a vertical position, remain within the limits specified by the Hydraulic Institute.

F. Electric Motor: Each pump shall be driven by a Submersible Squirrel Cage type Electric Motor, rated at 3 HP, 3450 RPM 460 Volts 3 Phase. Motor shall be NEMA Design B for continuous duty, capable of sustaining 10 starts per hour. The pump and motor shall be produced by one manufacturer and shall be of submersible design. All stator windings and leads shall be insulated with moisture resistant Class F insulation, capable of withstanding l55oC Max. temperature, dipped and baked three times. Upon assembly, the stator shall be heat-shrink fitted into the stator housing; the use of bolts, pins or other fastening devices which would require penetration of the stator housing, shall not be acceptable. In each phase winding there shall be embedded a temperature sensor. Any of these thermal sensors shall cut out electric power if the temperature in its winding exceeds 140oC, but shall automatically reset when the winding temperature returns to normal. The motor shall have an SF (Service Factor) of 1.15 and shall be non-overloading for the selected performance curve. Full load current shall not exceed 4.1 FLA at 480 Volts.

2.7 PUMP STATION CONTROLS

A. Control Sequence of Operation: The panel shall operate two (2) pumps in an on-demand, alternating fashion with input from a pressure transducer & backup float switches. Panel will be an I/O panel relaying to a remote PLC via a Fiber Network.

B. Control Panel: Complying with UL 698A, with weatherproof enclosure, covered compartments sized to accommodate controllers, circuit breakers, transformers, alternators, and programmable logic controller. Basis of Design Product: Orenco Systems, Inc., DAX Custom Panel.

1. Type 4X 304 Stainless Steel Enclosure, Floor-Mount, 3-Pt Latch
2. Dead Front Inner Door
3. Heater
4. Enclosure Light
5. Type 4X 304SS AC Unit
6. 100A Main Disconnect Circuit Breaker, 480VAC Rated
7. 15A Pump Circuit Breakers, 480VAC Rated
8. 60A Remote Transformer Circuit Breaker, 480VAC Rated
9. NEMA1 Starters
10. Motor Disconnects
11. Pump Run, Fail Seal Fail, High Temp. Lights, 30.5mm Heavy-Duty
12. 3kVA Local Control Transformer
13. 10A Controls Circuit Breaker
14. 20A GFCI Receptacle With CB
15. Allen-Bradley Remote I/O (1794-), including:
    1. AENT Ethernet/IP Adapter
    2. OW8 DO Card (qty.2)
    3. IB16 DI Card (qty.1)
    4. IE8 AI Card (qty. 2)
    5. PS3 Power Supply
    6. TBNF Terminal Base
    7. AENT Ethernet/IP Adapter
    8. ECR End Cap
16. Allen Bradley Panelview Plus 6 1250 Touchscreen HMI
17. Ethernet/Fiber Converter w/ 4 Ethernet Ports & 2 Fiber Ports
18. Two (2) Heat Sensor Relays
19. Two (2) Seal Fail Relays
20. H-O-A Switches, 30.5mm Heavy-Duty
21. E-Stop Push/Pull, 40mm
22. Space For Customer Supplied Flow Transmitter
23. Caged Flashing Beacon Alarm Light
24. Idec 24VDC Power Supply, 2.5A
25. Terminal Blocks as required
26. Labeling as required
27. UL698a Listing

Notes: Customer responsible for the following:

a) I/O For Control By Remote PLC
b) PLC/HMI programming software & cables not included.
c) PLC programming by others.
d) HMI programming by others.
e) Fiber/Ethernet Converter Supplied, But fiber cable & supplies not included.

C. Level Control System: Shall be a pressure transducer with 2 back up floats. The pressure transducer shall be Mercoid PBLT2 or Equal. The back-up floats shall be Internally weighted non-mercury floats.

2.8 PIPING AND VALVES

A. PVC Pipe, Fittings

1. PVC Pipe: All piping to be Sch80 PVC pipe in Wet Well and Valve Vault.
   a. Provide flanged ends for valves and flow meter in Valve Vault.
2. Glands, Gaskets, and Bolts: AWWA C111/A21.11, Gaskets to be 1/8" Neoprene rubber. All Nuts/Bolts in Wet well to be 316SS.
3. Application: Buried service between well and vault.

B. Swing Check Valves: The valve body and cover shall be constructed of ASTM A536 Grade 65-45-12 ductile iron. Check valves must include mechanical position indicators which display valve position at all times. VAL-MATIC SWINGFLEX CHECK VALVE 503ABFMI or Equal.

C. Eccentric Plug Valves: The valve body and cover shall be constructed of ASTM A126 Class B cast iron for working pressures up to 175 psig Direct and 100 Reverse. The words "SEAT END" shall be cast on the exterior of the body seat end. Valve shall be a direct drive with 2" AWWA Nut Actuator.VAL-MATIC CAM-CENTRIC PLUG VALVE 5803RN.

PART 3 - EXECUTION

3.1 PRECAST CONCRETE STRUCTURES

A. Install precast concrete structure sections with sealants per ASTM C 891.

3.2 FIELD QUALITY CONTROL

A. Perform tests and inspections and prepare test reports.

1. Manufacturer's Field Service: Engage a pump station manufacturer's authorized service representative to assist in testing and startup.

B. Tests and Inspections:

1. Test completed piping systems according to requirements of authorities having jurisdiction. Submit reports.
2. After installing wastewater pumping stations and after electrical circuitry has been energized, test pumps and controls for compliance with requirements.
3. After electrical circuitry has been energized, start units to confirm the station can run at pre-specified design parameters.
4. Test piping for leaks and defects.
5. Test and adjust controls and safeties.

C. Remove and replace components of the wastewater pumping stations that do not pass tests and inspections and retest as specified above.

Copyright Information ©2011 Jensen Precast All Rights Reserved. All materials appearing as Jensen Precast documents and the like are propriety work product and are protected under U.S. copyright and other laws. Unless in conjunction with business conducted with Jensen Precast, any use of Jensen Precast work product without express, written consent is prohibited and recipient is prohibited from distributing any and all work product to non-approved third parties under penalty of civil action.

PROJECT:
GROUNDWATER EXTRACTION STATION
SPECIFICATION

DATE:	DRAWN BY:	SHEET NO:
12.17.13	BMP	4 of 5

JENSEN ENGINEERED SYSTEMS
825 STENERI WAY, SPARKS, NV 89431
JensenEngineeredSystems.com
(855) 468-5600

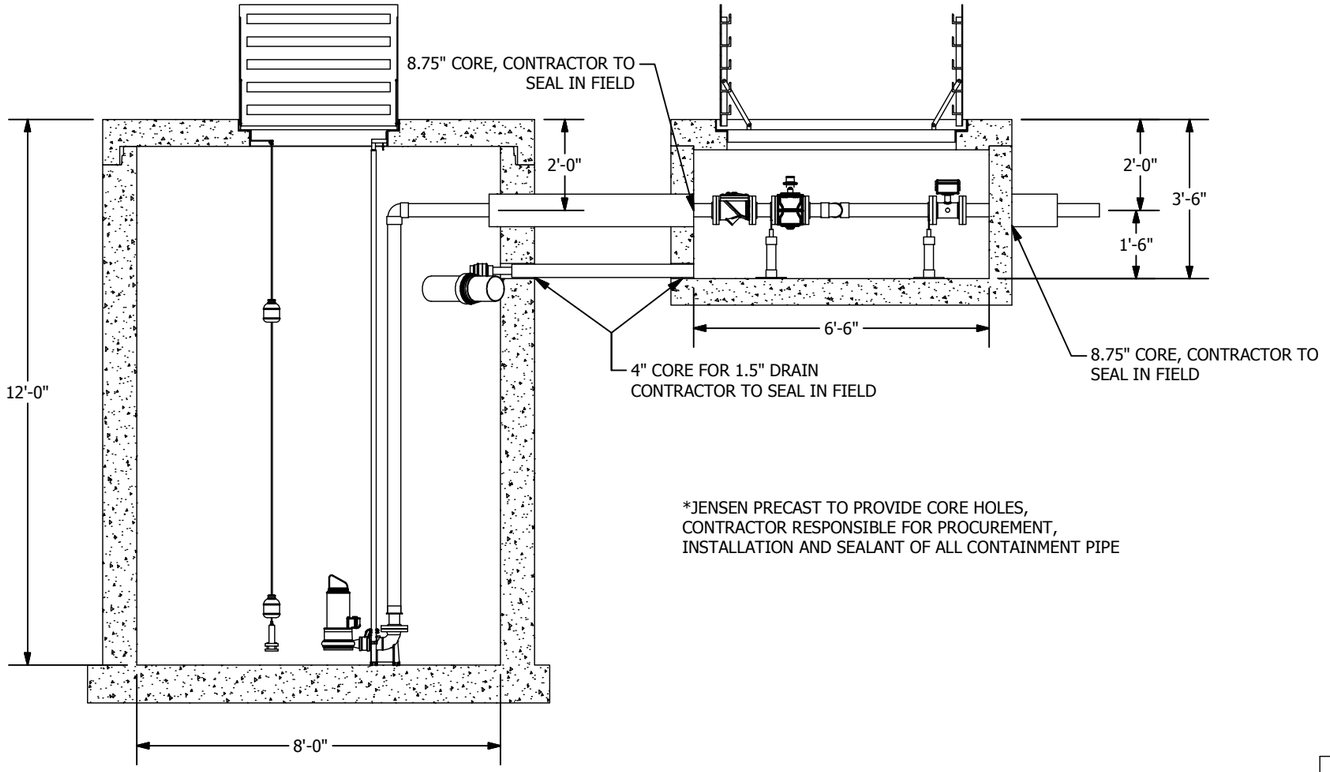

*JENSEN PRECAST TO PROVIDE CORE HOLES, CONTRACTOR RESPONSIBLE FOR PROCUREMENT, INSTALLATION AND SEALANT OF ALL CONTAINMENT PIPE

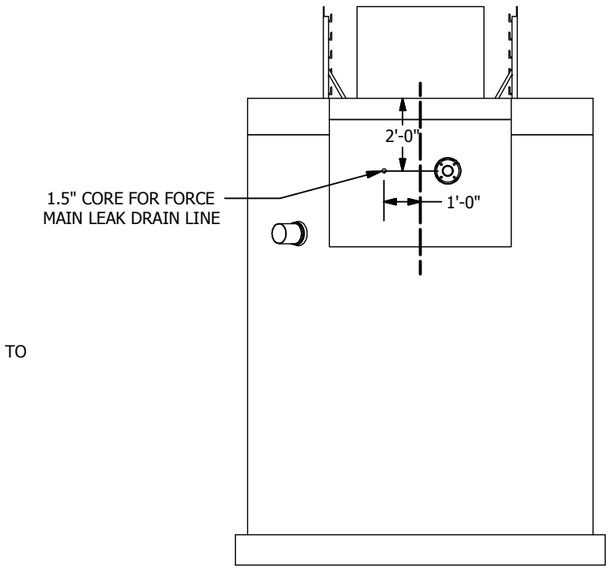

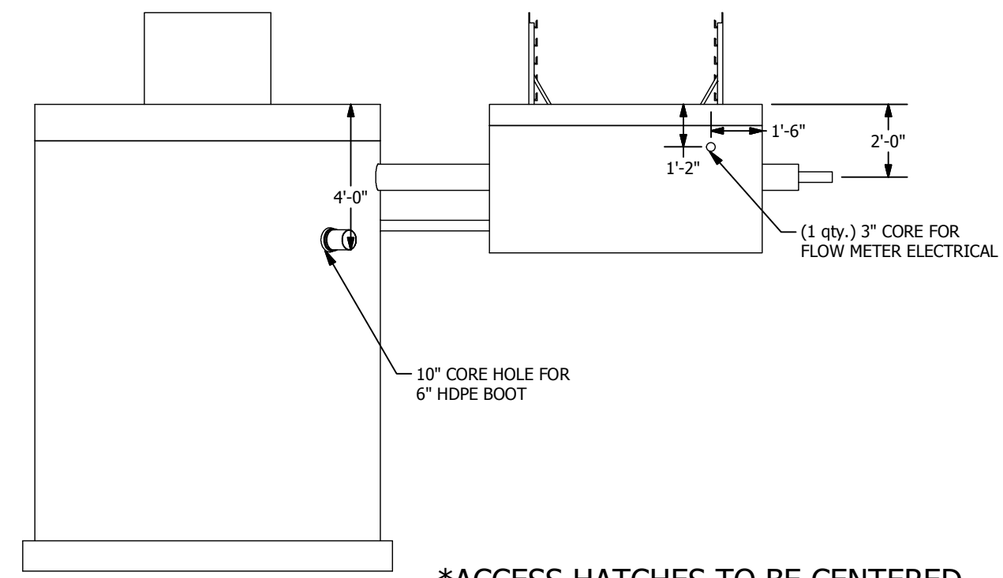

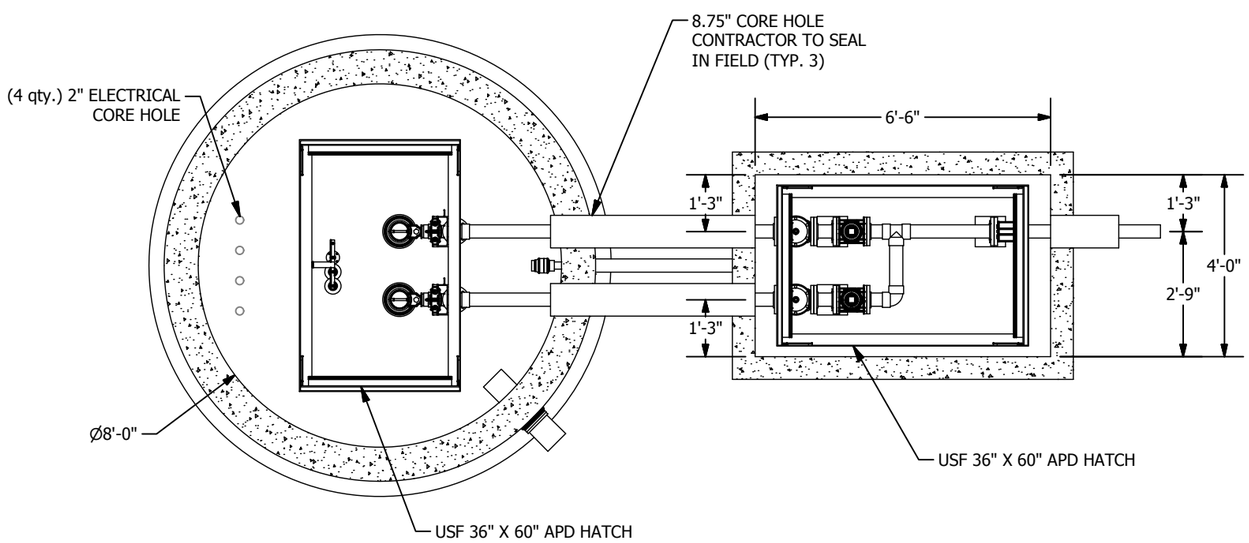

*ACCESS HATCHES TO BE CENTERED
*LOADING FOR 300 PSF PEDESTRIAN
*HIGH GROUNDWATER ISSUES

Copyright Information ©2011 Jensen Precast All Rights Reserved. All materials appearing as Jensen Precast documents and the like are proprietary work product and are protected under U.S. copyright and other laws. Unless in conjunction with business conducted with Jensen Precast, any use of Jensen Precast work product without express, written consent is prohibited and recipient is prohibited from distributing any and all work product to non-approved third parties under penalty of civil action.

PROJECT:
GROUNDWATER EXTRACTION STATION
ENGINEERING

DATE:	DRAWN BY:	SHEET NO:
12.12.13	BMP	5 of 5

JENSEN ENGINEERED SYSTEMS
825 STENERI WAY, SPARKS, NV 89431
JensenEngineeredSystems.com
(855) 468-5600

C:\Vault\Jobs\2013\100913 Groundwater Extraction Station\Groundwater Extraction Station.iam