Phase II Work Plan for AP – 5 Solids Removal

Prepared for:

Nevada Environmental Response Trust

35 E Wacker Drive, Suite 1550
Chicago, IL 60601

Prepared by:

Tetra Tech

1576 Sherman Street, Suite 100
Denver, CO 80203

March 13, 2015

TETRA TECH

CERTIFICATION

I hereby certify that I am responsible for the services described in this document and for the preparation of this document. The services described in this document have been prepared in a manner consistent with the current standards of the profession and to the best of my knowledge comply with all applicable federal, state and local statutes, regulations, and ordinances.

Description of Services Provided: Phase II Work Plan for AP-5 Solids Removal Issued on March 13, 2015, Prepared for the Nevada Environmental Response Trust Site, Henderson, Nevada

Kyle S. Hansen

3/18/2015

Kyle S. Hansen, CEM

Date

Field Operations Manager/Geologist

Tetra Tech, Inc.

CEM Certificate Number: EM 2167

CEM Expiration Date: September 18, 2016

Tetra Tech, Inc.
1489 W. Warm Springs Road, Suite 110 Henderson, NV 89014
Tel 702.946.6700 tetratech.com

LIST OF ACRONYMS

AWF	Athens Road Well Field
BOD5	biological oxygen demand (5 days)
BWPC	Bureau of Water Pollution Control
CPVC	Chlorinated Polyvinyl Chloride
CCDB	Clark County Department of Building
DO	dissolved oxygen
ETI	Envirogen Technologies, Inc.
FBR	fluidized bed reactor
FRP	fiberglass reinforced plastic
GWETS	Groundwater Extraction and Treatment System
GWTP	Groundwater Treatment Plant
IWF	Interceptor Well Field
MGD	million gallons per day
mg/L	milligram per liter
M&R	monitor and record
NAC	Nevada Administrative Code
NDEP	Nevada Division of Environmental Protection
NERT	Nevada Environmental Response Trust
NFA	No Further Action
NPDES	National Pollutant Discharge Elimination System
O&M	operation and maintenance
RCRA	Resource Conservation and Recovery Act
SMP	Site Management Plan
SOP	standard operating procedure
TDS	total dissolved solids
TSS	total suspended solids
μg/L	micrograms per liter

TABLE OF CONTENTS

1.0 INTRODUCTION 1
1.1 Purpose and Objectives 1
1.2 Background 2
1.3 Approach to Identify Preferred Alternative 4
2.0 DEVELOPMENT AND SCREENING OF ALTERNATIVES 5
2.1 Description of Alternatives 5
2.1.1 Alternative 1 – No Further Action 5
2.1.2 Alternative 2 – Use of Existing BT Tanks for Storage 6
2.1.3 Alternative 3 – Storage in New Storage Tank 6
2.2 Evaluation of Alternatives 7
2.3 Selection of Preferred Alternative 7
3.0 DESIGN CRITERIA 9
3.1 Site Conditions 9
3.2 Water Quality Standards 9
3.3 Health and Safety 9
3.4 Site Management Plan (SMP) Compliance 9
3.5 Permitting 9
3.5.1 NPDES Permit NV0023060 9
3.5.2 NDEP Groundwater Discharge Permit NEV 2001515 ("Groundwater Discharge Permit") 10
3.5.3 Clark County Department of Building (CCDB) Hazardous Material Permit #13-44287 10
3.5.4 Resource Conservation and Recovery Act (RCRA) Permitting 10
3.5.5 Dam Permitting 10
3.5.6 Construction Permitting 10
3.6 Design Assumptions 11
3.6.1 Removal of AP-5 Solids 11
3.6.2 Treatment of Solids Removed from AP-5 11
3.6.3 Treatment of Water from Solids Washing 12
4.0 ALTERNATIVE 3 DESIGN 13
4.1 Removal of AP-5 Solids 13
4.1.1 Process Description 13
4.1.2 Process Equipment 13
4.2 Treatment of Solids Removed from AP-5 14
4.2.1 Process Description 14
4.2.2 Process Equipment 15
4.3 Treatment of Perchlorate-Containing Water in GWETS 16
4.3.1 GWETS Operational Impacts and Modifications 16
5.0 START-UP, COMMISSIONING, AND OPERATION 18
6.0 IMPLEMENTATION COSTS 19

6.1 Step 1: Removal of AP-5 Solids 19
6.2 Step 2: Treatment Plant for Solids Removed from AP-5 and Wash Water 19
6.3 Operation of Solids Treatment System and Increased Costs for GWETS Operation 19
6.4 Operation and Maintenance Cost Summary 19
7.0 REUSABLE EQUIPMENT 20
8.0 SCHEDULE 21
8.1 Removal of AP-5 Solids 21
8.2 Treatment of Solids Removed from AP-5 and Wash Water 21
9.0 REFERENCES 22

TABLES

Table 2-1 Estimated Budget to Implement Alternative 2
Table 2-2 Estimated Budget to Implement Alternative 3
Table 2-3 Evaluation of Alternative for AP-5 Pond Solids Removal
Table 2-4 Comparison of Alternatives and Selection of Preferred Alternative for Removal and Treatment of Perchlorate from AP-5 Pond
Table 3-1 Water Quality
Table 3-2 Projected Volume, Density, Weight, and Concentration per Solids Treatment Batch
Table 3-3 Projected FBR Loading from AP-5 Wash Water
Table 4-1 Submersible Pump Characteristics
Table 4-2 Thickener Dimensions
Table 4-3 Sludge Storage Dimensions
Table 4-4 Filter Press Specifications

FIGURES

Figure 1-1 AP-5 Pond and Existing System
Figure 2-1 AP-5 Pond, September 2014
Figure 2-2 Storage in BT Tanks
Figure 2-3 Storage in New Tanks
Figure 2-4 Implementation Schedule for Alternatives 2 and 3
Figure 4-1 AP-5 Pond, Existing System and AP-5 Modifications
Figure 4-2 Process Flow Diagram AP-5 System (Modifications)
Figure 4-3 Process Flow Diagram Existing System
Figure 8-1 Implementation Schedule for Alternative 3

APPENDICES

Appendix A Design Drawings
Appendix B Vendor Specifications
Appendix C Response to Comments

1.0 INTRODUCTION

The Nevada Environmental Response Trust ("NERT" or "Trust") took title to the former Tronox site in Clark County, Nevada ("Site") on February 14, 2011 as part of the resolution of Tronox's bankruptcy. A groundwater extraction and treatment system designed to remove perchlorate and hexavalent chromium contamination in groundwater has been in operation at the Site since 1986.The system includes three extraction well fields: Seep Area Well Field (SWF); Athens Road Well Field (AWF); and Interceptor Well Field (IWF). Water from the IWF is treated for hexavalent chromium with a ferrous reduction process at the groundwater treatment plant (GWTP), before it is mixed with water from the AWF and SWF in the GW-11 Flow Equalization Basin (GW-11) and treated for perchlorate in a Fluidized Bed Reactor (FBR) process. The FBR process and associated equalization and polishing processes are collectively referred to as the groundwater extraction and treatment system (GWETS). Following treatment, water is pumped to the Las Vegas Wash.

The AP-5 Pond (AP-5) is a lined pond at the Site that was constructed and used in the manufacturing process for ammonium perchlorate. The AP-5 Pond, which is shown in Figure 1-1, along with the GWETS, contains residual ammonium and sodium perchlorate (perchlorate) that is contained within the solids found in the pond. Removal of perchlorate from the solids in AP-5 was performed between 2005 and 2012, but a layer of perchlorate crystals still persists as a lower layer on the AP-5 pond bottom.

The Trust currently holds Discharge Permit NEV2001515 ("Permit"), issued by the Nevada Division of Environmental Protection (NDEP), that authorizes the operation of AP-5 as a holding pond. The Permit requires that the primary liner system be free of leaks. Due to the presence of a leak in the primary liner system for the pond (fluids retained by secondary liner), the solids must be removed to either repair the leak to maintain compliance with the Permit, or to decommission the pond and terminate the Permit. In addition, the presence of this leak, combined with the elevated perchlorate concentrations in the solids contained in the pond, creates a threat of release to the environment that must be addressed.

This Phase II Work Plan (Work Plan) presents Tetra Tech's evaluation and comparison of the quickest removal alternative against a longer-term removal alternative and a No Further Action alternative. The creation of this Work Plan followed the June 2014 evaluation requested by NDEP for off-site disposal to potentially expedite removal of the solids from AP-5. Off-site disposal proved to be prohibitively high in cost and resulted in quantity limitations of the incineration facilities that extended the timeframe for removal of the solids. Off-site treatment and disposal would take over 10 years to treat the AP-5 solids and would cost over $60 million to incinerate the waste.

Tetra Tech, on behalf of the Trust, presents this Phase II Work Plan to evaluate alternative means for the effective removal and management of the solids and associated perchlorate in the AP-5 Pond. This Phase II Work Plan does not address the repair of the liner or the closure of the pond itself. The current operator of the GWETS, Envirogen Technologies Inc. (ETI), has been consulted in the preparation of this Work Plan and has provided concurrence on the approach, conceptual designs and procedures contained within.

1.1 Purpose and Objectives

This Work Plan has been divided into components that reflect two steps: 1) the removal of solids from the pond; and 2) the treatment of the solids and the resulting perchlorate-containing water. Each of the project components and their respective objectives are shown below.

Step 1. Removal of Solids from AP-5

- Ensure safe and quick removal of solids in AP-5 by creating a liquid, nonreactive slurry that can be removed by pumping.
- Provide safe, interim storage of solids while awaiting treatment by the GWETS.

Step 2. Treatment of Solids Removed from AP-5 and the Perchlorate-Containing Water

- Remove perchlorate from the inert solid material via mixing with water.
- Modify the existing GWETS as necessary to treat water from AP-5.
- Treat perchlorate-containing water in the GWETS for discharge to the Las Vegas Wash consistent with NPDES Permit NV0023060 while operating within the mass loading restrictions of the GWETS. Additionally, modification to NPDES Permit NV0023060 will be sought as described in Section 3.5.1.

Step 1 is a task that can be performed independent of Step 2. Step 2 can be conducted any time after Step 1 and consists of two parts: 2a – the cleaning of the solids; and 2b – the subsequent treatment of the resulting water from the cleaning process in the GWETS.

Through submittal of this Work Plan, the Trust requests NDEP's concurrence on this strategy and approval of the related budget for implementation.

1.2 Background

The closure of AP-5 was addressed in the Administrative Order on Consent dated April 12, 2005 (2005 AOC). The 2005 AOC specified that an additional bioreactor be designed, purchased, and installed to allow for treatment of the ammonium perchlorate residuals from AP-5 in the GWETS. The additional reactor was installed, and treatment of the AP-5 residuals commenced in August 2006. Stabilized Lake Mead Water was added to the pond to solubilize the ammonium perchlorate residuals, and the water was pumped from AP-5 to GW-11 and to the FBRs. This flushing and treatment process was stopped in early 2012 because the mass of perchlorate in the water pumped from AP-5 had dropped from 2,500-3,000 pounds per day (lbs/day) in 2009 to less than 500 lbs/day in 2011. The mass removal data were submitted to the NDEP in a memorandum from ENVIRON International Corporation (ENVIRON) to Shannon Harbour of NDEP dated March 30, 2012 (ENVIRON 2012a).

Following cessation of the flushing program, a work plan for performing characterization of the pond solids was submitted on September 28, 2012 by the Trust to NDEP (ENVIRON 2012b). The following excerpt describes the AP-5 pond residual solids sampling program:

> "One composite sample will be collected from randomly selected locations for every 250 cubic yards of pond solids for the first 1,000 cubic yards and an additional sample will be collected for each 1,000 cubic yards. Composite samples will consist of four representative subsamples."

The work plan was approved by NDEP on February 4, 2013 and samples were collected in June 2013, after drying of residual solids. A draft report on the characterization program was submitted to Tetra Tech on May 16, 2014 (ENVIRON 2014). The characterization showed that there are two distinct layers of solids. The upper layer is 2 to 2.5 feet deep and is composed of light brown, silty sand containing some fibrous material. The layer below the silty sand layer was described as "partially cemented, white granular crystals" and has a thickness of 0.5 to 1 foot.

The following analyses were conducted on the composite samples for the characterization report (ENVIRON 2014):

- Ammonia
- Eight Resource Conservation and Recovery Act (RCRA) metals (As, Ba, Cd, Cr, Pb, Hg, Se, Ag)
- Flash Point/Ignitability
- Herbicides
- Hexavalent Chromium
- Organochlorine Pesticides
- Oxidation Reduction Potential
- Paint Filter Test
- Perchlorate
- pH
- Polychlorinated Biphenyls
- Semivolatile Organic Compounds

The conclusion of the AP-5 Pond solids characterization (ENVIRON 2014) was that the solids could not be cost-effectively excavated and disposed due to the reactive and ignitable nature as determined by the DOT/UN tests. Tetra Tech completed an evaluation of an off-site disposal option in June 2014 and determined that the time to complete and the cost associated with off-site disposal is prohibitively high when compared to on-site treatment.

1.3 Approach to Identify Preferred Alternative

This Work Plan presents the following three alternatives for removal and treatment of perchlorate from the AP- 5:

1. Alternative 1: No Further Action: Maintaining water levels in AP-5 to ensure that solids containing perchlorate are kept wet at all times.
2. Alternative 2: Removal of perchlorate slurry from pond, storage in existing four BT Tanks, and treatment of perchlorate-containing solids and water.
3. Alternative 3: Rapid removal of perchlorate slurry from pond, storage in new, 2-million gallon storage tank, and treatment of perchlorate-containing solids and water.

These three alternatives are evaluated and compared in order to identify a preferred alternative in Section 2 and detailed information of the design, cost, and schedule for implementation of the preferred alternative are presented in Sections 3 through 7.

2.0 DEVELOPMENT AND SCREENING OF ALTERNATIVES

The three alternatives identified in Section 1.3 are described, evaluated, and compared in this section. The following four criteria were applied for the screening and selection of the preferred alternative:

- Effectiveness
- Implementability
- Cost
- Time to Solids Removal

Both treatment alternatives involve the creation of a slurry of the existing solids in the pond for removal by pumping into storage tank(s), where the slurry will be kept in suspension until it can be further diluted, solids separated, and the water can be treated in the existing FBR system. This approach includes the following steps for two project components identified in Section 1.1.

Step1. Removal of Solids from AP-5

- Addition of Stabilized Lake Mead Water to AP-5 solids to facilitate creation of a slurry.
- Pumping of perchlorate-containing solids as a slurry to a large storage tank with agitation to keep solids from settling and separating.
- Storage of the perchlorate-containing slurry in large storage tank.

Step 2. Treatment of Solids Removed from AP-5 and the Perchlorate-Containing Water

- Semi-batch treatment of perchlorate-containing solids to clean the solids.
- Solids separation and dewatering of clean solids.
- Transfer of perchlorate-containing solution to GW-11 before treatment in existing FBRs.
- Treatment in existing GWETS with additional FBRs in operation.

2.1 Description of Alternatives

Tetra Tech evaluated three alternatives for removal of solids from AP-5: 1) no further action (NFA); 2) use of existing tanks at the Site for temporary storage of pond solids prior to treatment; and 3) construction of a new tank for temporary storage of pond solids prior to treatment. A description of each of these three alternatives is presented below.

2.1.1 Alternative 1 – No Further Action

Under the NFA alternative, the solids in AP-5 will remain in the pond and flooded by Stabilized Lake Mead Water for an indefinite period of time with no further action undertaken. The existing leak detection system for water that collects between the primary and secondary liners will have to be maintained and the collected water will be pumped, and the water treated for as long as the perchlorate is present in the pond. NFA increases the risk of perchlorate infiltration to groundwater in case of further damage to the top liner of AP-5 or degradation of the secondary liner, and does not address the Trust's compliance with the Permit. This alternative has been implemented and is used as the base case for comparison with the perchlorate removal alternatives, so it was assumed that there would be no additional costs associated with this alternative. Figure 2-1 shows the current conditions in the pond.

2.1.2 Alternative 2 – Use of Existing BT Tanks for Storage

Alternative 2 involves the use of all four, existing 150,000-gallon BT tanks to store a combined volume of 600,000 gallons of the slurry from AP-5 at a time. These tanks were previously used in the production of ammonium perchlorate prior to 2001 and are no longer in use. It is assumed that a ratio of dilution water to pond solids ranging from 2:1 to 3:1 will be required to form a slurry that can be easily pumped from the pond. Based on the estimated approximately 2,200 cubic yards of solids in the pond, the resulting volume of slurry requiring storage will range from 1.3 to 1.8 million gallons. Given the storage capacity in the BT tanks, three mobilizations for removal of perchlorate slurry from AP-5 would be required. Perchlorate in the pond will continue to be immersed in Stabilized Lake Mead Water until removed. It should be noted that Stabilized Lake Mead Water will only be added to a level sufficient to cover the depth of solids remaining in the pond to prevent water from flowing through the existing tear in the top liner of the AP-5 pond. Perchlorate slurry will be removed from the pond by use of a submersible slurry pump operated by a crane. The use of high pressure hoses to add water near the pump may be used as a contingency plan should the need arise to aid in moving solids toward the pump suction and creating a pumpable slurry in the pond. Additional mixing within the pond to make a more dilute slurry is not deemed to be necessary. The extracted slurry will be pumped to the four BT tanks for storage and processing. This alternative requires the installation of a mixing system in all four BT tanks to keep the solids in suspension. The process integrating BT tanks as storage is presented in Figure 2-2.

Prior to flooding the pond with Stabilized Lake Mead Water and pumping the slurry, the AP-5 vault sump pumps will be run to ensure the water is pumped out from between the liners. The sump pumps will be run once a day at the beginning of the project and then transitioned to weekly pumping after it is determined that the amount of water entering the sump is not significantly different than it was before the flooding and slurry pumping process began.

This option requires another mixing tank for further dilution of the solids once pumped from the BT tanks, use of the existing thickener[1], addition of a filter press, and a sludge storage tank for the solids separation process. Perchlorate-containing water will be gravity fed to the GW-11 equalization basin for treatment in the FBRs.

For this alternative, the time to remove the solids from AP-5 would also depend on the available loading to the existing FBRs, since each batch of solids pumped from AP-5 would need to be treated before the next batch of solids can be removed. The pond will be empty of all solids, once two thirds of the solids have been treated, as the last third of the solids could be stored in the BT Tanks. Based on projected available loading to the FBRs, each 600,000-gallon batch of solids will take 5 months for treatment. The 5-month duration to treat solids assumes a 5-day work week where the entire capacity of the thickener is used and more than one filter press cycle is run each day. Therefore, assuming that the BT tanks can be inspected, rehabilitated, and fitted with mixing systems in 5 months, AP-5 could be empty within 15 months. The preliminary capital costs and operations costs of Alternative 2, which were developed for the screening and comparison of alternatives are presented in Table 2-1.

2.1.3 Alternative 3 – Storage in New Storage Tank

Under Alternative 3, the slurry pumped from AP-5 would be stored in one large, new tank. Based on a possible range of 1.3 to 1.8 million gallons in the quantity of slurry to be pumped

[1] The thickener was previously used in the GWETS solids handling process, but is no longer in use. Tetra Tech has discussed the possibility of using the thickener with ETI, and was given approval to use the thickener to dewater the AP-5 solids. The thickener is located between the FBRs and D1 building.

from AP-5, a 2-million gallon tank with mixing system will be constructed. This process is presented as Figure 2-3.

This scenario is less complex than a multiple-tank system with regard to AP-5 removal activities as well as operation and maintenance (O&M) associated with storage. Another advantage is that the BT tanks are available to be used for contingency volume in case more dilution water is required to remove all the solids from AP-5.

The solids in AP-5 will remain flooded by Stabilized Lake Mead Water until removal operations have been completed, as defined for Alternative 2. Again, it should be noted that Stabilized Lake Mead Water will only be added to a level sufficient to cover the depth of solids remaining in the pond to prevent water from flowing through the existing tear in the top liner of the AP-5 pond. The slurry will be pumped to a storage tank equipped with a mixing system to prevent sedimentation. Again, the use of high pressure hoses to add water near the pump may be used as a contingency plan should the need arise to aid in moving solids toward the pump suction and creating a pumpable slurry in the pond. Additional mixing within the pond to make a more dilute slurry is not deemed to be necessary. Solids will then be treated in the existing thickener with circulation to solubilize perchlorate and to provide solids separation. Perchlorate-containing water will be discharged to GW-11 before treatment in the existing FBRs.

Prior to flooding the pond with Stabilized Lake Mead Water and pumping the slurry, the AP-5 sump pumps will be run to ensure the water is pumped out from between the liners. The sump pumps will be run once a day at the beginning of the project and then transitioned to weekly pumping after it is determined that the amount of water entering the sump is not significantly different then it was before the flooding and slurry pumping process began.

It is estimated that it will take 8 months to design, procure, and install the new tank and 2 months to remove the perchlorate-containing solids from the pond. Treatment of the solids and perchlorate-containing water can then proceed over an extended time, depending on the capacity of the existing FBRs and the total equivalent loading. The estimated capital costs and operations costs for Alternative 3 and its components are presented in Table 2-2.

2.2 Evaluation of Alternatives

The three alternatives were evaluated independently before being compared against four basic criteria of effectiveness, implementability, cost and time for removal of the solids. Table 2-3 provides a summary of the evaluation of the alternatives. It should be noted that the cost comparison was made based on preliminary cost estimates. The schedules for implementation of Alternatives 2 and 3 are shown in Figure 2-4.

The information in Table 2-3 was used to perform a comparison of alternatives presented in Section 2.1.

2.3 Selection of Preferred Alternative

The alternatives summarized in the previous sections were compared against the objectives presented in Section 1.1 and the basic criteria for the selection of a preferred alternative to be developed in further detail. The comparative evaluation and recommendation for each alternative are summarized in Table 2-4.

The comparison of alternatives resulted in the selection of Alternative 3, involving the use of a large new storage tank for the perchlorate-containing slurry, as the preferred alternative for the removal of solids from the AP-5 pond. Alternative 3 allows for the AP-5 pond to be closed in the shortest length of time. Alternative 1 was rejected because it is not effective in minimizing the risk associated with containing the perchlorate in the AP-5 pond and lack of permit compliance. Alternative 2 was rejected because the limited storage capacity extends the time period that

perchlorate is left in the pond compared to Alternative 3. The selected alternative poses the lowest risk of exposure and contaminant migration to groundwater as the perchlorate will be removed effectively during one short-term removal effort. The shorter time to remove the pond solids in Alternative 3 compared to Alternative 2 outweighs the cost benefits of the latter.

The design, schedule, and cost for Alternative 3 are presented in Sections 3 through 7 of this document.

3.0 DESIGN CRITERIA

3.1 Site Conditions

AP-5 is approximately half an acre in size. Based on current estimates, the pond contains approximately 2,200 cubic yards of solids that require removal and treatment in the solid cleaning process. According to the ENVIRON solids characterization work, the pond solids are approximately 75% solids by weight (ENVIRON 2014). Tetra Tech estimates that the solids will need to be mixed with up to a 3:1 volume ratio of water to solids to facilitate pumping of the solids as a slurry and account for additional water for final cleaning of the pond liner. This dilution ratio would create a slurry with a total volume of up to 1,800,000 gallons. At that volume, the solids concentration equates to 28% solids by weight. However, a more likely operable range is 33 to 50% solids by weight.

3.2 Water Quality Standards

To maintain compliance with NDPES Permit NV0023060 held by the Trust, the GWETS must meet the discharge standards as presented in Table 3-1.

3.3 Health and Safety

Tetra Tech will update the site-specific health and safety plan with the project specific attributes of this Work Plan, and specifically address safety concerns when managing perchlorate-containing material. The updates will be implemented before AP-5 dewatering operations commence. Contractors that are hired to install the storage tank, equipment, and piping will be required to prepare a health and safety plan that covers their work activities. Tetra Tech will also consult with ETI in the update of their health and safety plan as they will be implementing Steps 2a and 2b of the project.

3.4 Site Management Plan (SMP) Compliance

The implementation of this work plan will adhere to and provide the required construction mitigation, contingency plans, notifications, and risk management measures and procedures described in the SMP. The checklist of notification and reporting requirements to the NDEP and the Trust of the existing SMP will be fulfilled as necessary prior to the implementation of this work. A separate document including all relevant requirements as defined by the SMP will be provided to the NDEP for approval prior to initiating the project.

3.5 Permitting

The following is a list of permits related to the GWETS and permit modifications deemed to be necessary in the implementation of the recommended approach.

3.5.1 NPDES Permit NV0023060

Treating water from washing the AP-5 solids requires the addition of a storage tank and filter press to the existing GWETS system. Notice of any planned physical alteration or additions to the permitted facility are required as soon as possible if the alteration creates a new source, the nature and quantity of pollutants discharged changes, or there is a significant change to sludge management practices. Per Section I.A.11 of the Permit, notice of the additional equipment and proposed changes to the GWETS will be provided to NDEP – Bureau of Water Pollution Control (NDEP–BWPC) with a request for approval of the plans prior to implementation. The changes to the GWETS will comply with the Nevada Administrative Code (NAC) 445A.283 to 445A.285.

In addition, the operations and maintenance (O&M) manual will be updated to reflect the change in the operation of the GWETS per Section I.A.13.

3.5.2 NDEP Groundwater Discharge Permit NEV 2001515 ("Groundwater Discharge Permit")

The Site holds Groundwater Discharge Permit NEV 2001515 issued by NDEP. Per Section II.A.1 of the Groundwater Discharge Permit, notice of the proposed plans for treatment of AP-5 solids wash water will be provided to the NDEP-BWPC with a request for approval of the plans prior to implementation. The approved O&M manual will be updated to reflect the changes to AP-5 during solids removal.

3.5.3 Clark County Department of Building (CCDB) Hazardous Material Permit #13-44287

The Site holds Hazardous Material Permit #13-44287 issued by CCDB. As described in Section 4.3.1.3, depending on the process needs, additional urea and/or caustic soda may need to be added. In the event that additional chemicals are needed, the CCDB hazardous materials permit will be modified to reflect any increased storage volume or use of additional chemicals.

3.5.4 Resource Conservation and Recovery Act (RCRA) Permitting

While perchlorate waste is not regulated as a listed waste under RCRA, perchlorate waste can be regulated under RCRA as a characteristic waste if the waste exhibits specific characteristics, including ignitability (D001) and reactivity (D003). Once a characteristic waste no longer exhibits the characteristic, it is no longer a hazardous waste. Perchlorate waste that exhibits the characteristics of ignitability and reactivity can be diluted with water to ionize the perchlorate so the waste is no longer ignitable or reactive. The addition of the water to the waste to render it characteristically inert is considered treatment under RCRA, which would require a permit. However, assuming the AP-5 solids are a waste, the proposed treatment of the AP-5 solids falls under the wastewater treatment unit exemption pursuant to 40 C.F.R.§264.1(g)(6), 40 C.F.R. §265.1(c)(10) and 40 C.F.R. §270.1(c)(2)(v) as the GWETS is subject to the Permit and the proposed tank will be connected to the GWETS. Tetra Tech will ensure compliance with the wastewater treatment unit exemption and a RCRA permit will not be necessary. Tetra Tech has discussed this analysis with NDEP and NDEP has concurred that a RCRA permit is not necessary for the proposed handling of the AP-5 solids.

3.5.5 Dam Permitting

Chapter 535 of the Nevada Revised Statues defines dams that require approval for construction as those that will be 20 feet or greater in height or impound 20 acre-feet or greater of water. Neither of these requirements would be applicable to the secondary containment berm surrounding the large storage tank described in this Work Plan.

3.5.6 Construction Permitting

The Trust has no current open building permits for the Site. CCDB requires permits for most construction projects. As defined by the Clark County Administrative Code, a permit application and construction documents shall be filed for review by the Building Official prior to any construction activities. Permits that may need to be obtained by a licensed contractor as determined by the Building Official's review may include, but are not limited to:

- Construction
- Electrical
- Grading
- Installation
- Mechanical
- Plumbing

3.6 Design Assumptions

3.6.1 Removal of AP-5 Solids

The conceptual design for achieving rapid removal of the solids in AP-5 is based on the following assumptions:

- The current amount of ammonium perchlorate in AP-5 is 900 tons.
- Preliminary design work indicates no detrimental substances other than perchlorate will be encountered at concentrations of concern during the removal of the AP-5 Pond solids. The AP-5 pond solids did contain Semivolatile Organic Compounds (SVOCs) and pesticides at low ppb levels. The highest total chromium level was 1300 mg/kg.
- Stabilized Lake Mead Water will be used to create slurry that can be removed from the pond with a slurry pump.
- Slurry will be removed from the AP-5 pond with a remotely navigated pump and vacuum tankers with sludge pumps.
- The volume of dilution water will be minimized, but the perchlorate content in the extracted slurry will be less than 70 percent at all times.
- The liquid to solid ratio will increase toward the end of the operation for the flushing of any remaining perchlorate, resulting in an overall extracted slurry with approximate water to solids ratio of up to 3 to 1.
- A 2-million gallon tank with continuous mixing will be used for storage of perchlorate-containing slurry. (Estimated need is between 1.3 and 1.8 million gallons as presented in Section 2.1.2.)

3.6.2 Treatment of Solids Removed from AP-5

The design assumptions for treatment of AP-5 solids are as follows:

- Pond slurry will be treated in a batch mode in the existing thickener.
- AP-5 slurry from the storage tank will be mixed with Stabilized Lake Mead Water in the existing thickener at a water to slurry dilution ratio of up to 3 to 1. See Table 3-2 for calculations of volumes, density, and weight.
- Dewatered solids resulting from washing and dewatering can be managed as non-hazardous waste.
- Treating water from AP-5 previously occurred and did not negatively impact the FBRs or final discharge. Therefore, the GWETS is capable of treating water from the AP-5 solids removal project to comply with discharge criteria to the Las Vegas Wash. Discharge water chemistry will be further evaluated during the final design phase.
- ORP measurements in the thickener will be used to assess further processing needs, such as additional washing cycles, for the solids. Samples will initially be collected on a per batch basis and analyzed by ETI in their on-site laboratory for perchlorate to verify ORP readings (i.e., samples will be collected from the storage tank for each batch before the material is routed to the GWETS for treatment). The frequency will be adjusted based on the reliability of the ORP readings. The monitoring procedures will be included in a standard operating procedure (SOP) that will be prepared to guide operation of the solids washing process.

- Diluted AP-5 solution (i.e., the overflow from the thickener) will be conveyed to the GW-11 equalization basin in batch mode based on operational loading considerations for the FBRs.
- The added load of AP-5 water to GW-11 will be adjusted so that the GWETS influent does not exceed 80% of total system equivalent load capacity.
- The water discharged from the thickener to GW-11 is anticipated to have a total suspended solids (TSS) content of less than 10 mg/L (i.e., low solids) resulting in minimal impact on GW-11 or GWETS operations.

3.6.3 Treatment of Water from Solids Washing

The water from the solids washing step will be discharged to GW-11 for treatment through the GWETS. The number of batches of solids processed per day will be based on maintaining the concentration in GW-11 at a level that is no more than 80% of the allowable load for the FBRs. The projected loading on the FBRs from the washing of the AP-5 solids is presented in Table 3-3.

4.0 ALTERNATIVE 3 DESIGN

The focus of the design is on Steps 1 and 2a, which involve new equipment and processes for slurry removal from the AP-5 pond and processing of the extracted solids. Treatment of contaminated water from the AP-5 solids removal (Step 2b) will be performed by operational adjustments to the existing GWETS. The layout for the new and existing system components is shown in Figure 4-1 where the additional process units for AP-5 removal, storage, and treatment are highlighted in yellow.

4.1 Removal of AP-5 Solids

4.1.1 Process Description

The processes for the removal and storage of perchlorate-containing solids from the AP-5 Pond are shown in Figure 4-2. The perchlorate solids in AP-5 will remain flooded by Stabilized Lake Mead Water until removal operations have been completed. A crane-mounted, submersible slurry pump will be used to remove the majority of the perchlorate slurry. It is anticipated that there will be remaining residue that cannot be removed by the submersible pump and will require manual removal by a vacuum box with the aid of a vacuum truck. For planning and estimating purposes, it is assumed that the total amount of water needed for solids removal represents a ratio of approximately 2:1 to 3:1 water to solids. This ratio will be adjusted as necessary over time to achieve the required removal and it is assumed that removal of the final residue will require significantly more dilution. Water use will be minimized to optimize the removal and treatment operation by keeping the solids content below pump specification limitations, while operating to well below the 70 percent perchlorate safety limit for the slurry.[2] The AP-5 slurry will be pumped to a storage tank equipped with hydraulic mixing systems to prevent settling.

4.1.2 Process Equipment

4.1.2.1 AP-5 Submersible Slurry Pump

A submersible slurry pump will be used to pump slurry from AP-5 to the storage tank. Pump requirements are listed in Table 4-1 and vendor information for an applicable Toyo pump is provided in Appendix B. Movement of the pump around the pond will be controlled by a crane.

4.1.2.2 Vacuum Box and Vacuum Truck

A 3,500 to 5,000 gallon capacity vacuum box will be used to remove the residual slurry in the pond at the last stage of the evacuation process. The box will be connected to a vacuum truck to supply the vacuum pressure inside the box for which a connected flexible hose will be navigated manually in the pond for residual removal. The box is designed to mount the slurry pump inside to pump the constituent to the storage tank in a continuous process.

The pump and crane is to be provided by a subcontractor who will also provide the vacuum box and truck for removal of residuals that cannot be reached by the submersible pump.

---

[2] Based on analysis performed by the U.S. Air Force Materiel Command, as documented in the study *Assessment of Perchlorate Releases in Launch Operations* dated October 25, 2001, "Pure crystalline ammonium perchlorate is explosive; however, when diluted to 70% or less in water, it is completely ionized and is comparatively inert" (Section 2.1, Page 5). This 70% dilution factor is also referenced by the California Department of Toxic Substances Control in their *Perchlorate Best Management Practices Workshop* on November 1, 2005. During the design phase of the project, additional analysis will be performed to validate the conclusions of these referenced studies.

4.1.2.3 Pipelines

Pipelines will be made of CPVC. Pipelines that are not within containment areas will either be double-contained CPVC or a large diameter PVC outer pipe with an HDPE inner pipe. Pipelines that are not within containment areas include:

- AP-5 to the slurry storage tank
- Existing thickener to GW-11
- Existing thickener to the sludge storage tank

4.1.2.4 New Storage Tank with Mixing System

A 100-ft diameter, 2-million gallon, open-top storage tank with steel walls and concrete bottom will be used for storage of the slurry extracted from AP-5. The internal coating of the tank will be abrasion and chemical resistant. The tank will be equipped with hydraulic jet mixing systems to keep the solids suspended. It is assumed that a hydraulic recirculation system with nozzles designed for the tank specifications will be used. Information on the Tideflex hydraulic jet mixing system is included in Appendix B. Preliminary design for the jet mixing system were performed in the preparation of this work plan. Final design will be performed as part of the final design.

The new storage tank will require emergency containment. Tetra Tech will construct a bermed area with a geomembrane liner around the storage tank. The total capacity within the bermed area will be 2.2 million gallons (a volume 10% greater than the storage tank).

4.2 Treatment of Solids Removed from AP-5

Once the solids are removed from AP-5, the pond can be closed. The solids will be pumped from the storage tank to a treatment process to remove perchlorate from the solids so that the solids can be disposed as a non-hazardous, solid waste.

4.2.1 Process Description

The processes for the separation and treatment of the solids in the slurry pumped from the storage tank are shown in Figure 4-2. The perchlorate slurry will be further diluted in the thickening tank, at a ratio of up to 3:1, Stabilized Lake Mead Water to slurry. The resulting mixture will be recirculated until the amount of perchlorate remaining in the solids is at an acceptable level. The slurry will be diluted with Stabilized Lake Mead Water at a ratio of 3 to 1, then pumped to the thickener where solids are allowed to settle and the clarified effluent sent to GW-11 pond. After the clarified liquids are drawn off, Stabilized Lake Mead Water is added and the process repeated as required to reduce the remaining concentrations of perchlorate in the slurry until the solids meet acceptable disposal requirements. ORP and perchlorate will be analyzed in solution as a proxy for perchlorate remaining in the solids. The solids cleaning process will be operated to generate a non-hazardous solid waste through the recirculation process. Once an acceptable level of perchlorate is achieved in the solution that would indicate non-hazardous solids, the solids will be settled in the thickener and transferred to the solids storage tank.

The Basic Comparison Level (BCL) for Human Health for the BMI Complex is listed as 795 mg/kg (NDEP 2013). Bench testing was performed by Tetra Tech and was able to reach a concentration of 250 mg/kg in the solids. Therefore, this level of perchlorate is low enough to meet UN/DOT requirements. Because hazardous waste determination is based on reactivity and ignitability rather than concentration, specific testing will need to occur during the design phase to confirm the material's reactivity. Final disposal criteria will be determined during plant startup and initial washing and testing.

4.2.2 Process Equipment

*4.*2.2.1 *Thickener*

An existing steel thickener will be used for washing and solids separation following the dilution and mixing of AP-5 slurry and Stabilized Lake Mead Water. The existing thickener[3], with dimensions provided in Table 4-2, will remain in the current location identified in Figure 4-1. The thickener includes a scraper drive mechanism, two rotating scraper arms, flocculation mixers, and a 36-in wide bridge. Flocculation mixer controls are mounted in the thickener drive panel. Decant discharge pipes will be added to the thickener to allow conveyance of treated water to GW-11.

4.2.2.2 *Storage Tank for Decontaminated Sludge*

An existing 8,200-gallon FRP tank[4] will be relocated to the location identified in Figure 4-1 and used for interim storage of decontaminated sludge. The tank is currently equipped with a top-entry Lightnin mixer that was installed in 1996 and has been abandoned for some time. The mixer will be used to prevent sedimentation prior to dewatering by a filter press. The gearbox will be inspected by a Lightnin service representative to assess its condition and identify any rehabilitation requirements to place it back in service. The structural condition of the tank will be inspected and the mixer will be analyzed to ensure it is suitable for the tank and mixing demands. Table 4-3 shows existing tank dimensions and overall capacity.

4.2.2.3 *Filter Press*

A new plate and frame filter press will be used to handle solids from the thickener. Tetra Tech discussed the capacity of the existing dewatering equipment with ETI and it was concluded that, with the increased load, both of the existing filter presses are likely to be needed to handle the biological solids. Furthermore, an additional filter press will aid in eliminating a dewatering bottleneck in the GWETS in the future should the need arise to dewater AMPAC sludge. The two existing presses combined with the third additional press should be able to dewater AMPAC sludge if the need arises without causing a backup in the GWETS, however, the accommodation may require additional press cycle runs and operator personnel. The AMPAC sludge comes from treated water and as such does not contain significant quantities of perchlorate or nitrate, thus it will not impact the plant loading.

The dimensions and capacity of the new filter press are shown in Table 4-4. The filter press is sized to dewater all solids in three (3) years at one (1) press cycle per day. The press cycle takes approximately one hour and more cycles can be run each day if desired. After treatment of AP-5 solids has been completed, the filter press can be used to address future GWETS needs.

4.2.2.4 Process Pumps

Once the slurry has been pumped to the large storage tank, air-operated diaphragm pumps will be used. Double-diaphragm, air-operated pumps will be used for the mixing tank feed pump following the slurry storage tank and the sludge transfer pump following the thickener. Vendor information from Wilden Pro-Flo air-operated diaphragm pumps is provided in Appendix B.

[3] The thickener was previously used in the GWETS solids handling process, but is no longer in use. Tetra Tech has discussed status of the thickener with ETI, and was given approval to use for this purpose.
[4] The FRP tank was previously used in the manufacturing of ammonium perchlorate in the BT area and is no longer in use. Tetra Tech will evaluate the relocation of this tank versus purchase of a new tank during the detail design.

4.2.2.5 Filter Press Feed Pump

A 40 HP feed press feed pump with VFD control will be provided as part of the filter press package. The filter press feed pump is specifically designed for filter press applications and the pump to be provided is described in the Micronics information in Appendix B. A brochure from PEMO is also provided in Appendix B for more information.

4.2.2.6 Polymer Metering Pump

If needed, polymer metering pumps will be rubber stator, positive displacement style delivery pumps with VFD speed controllers. These pumps will be supplied as part of the filter press vendor package, if needed. The polymer blending system and metering pump information is provided in dynaBLEND's vendor provided information in Appendix B.

4.2.2.7 Ancillary Equipment

Flocculant (Polymer)

The use of polymer will depend on the sludge characteristics. If polymer is needed for sufficient dewatering, a polymer storage and feed system will be provided as part of the filter press package.

Air Compressor

An air compressor will be required for the operation of the diaphragm pumps and the cake blow/air blow requirements of the filter press. The size and capacity of the compressor will be evaluated to determine if it can be used as future replacement for one of the existing GWETS compressors.

4.3 Treatment of Perchlorate-Containing Water in GWETS

This section describes how the perchlorate-containing water from the AP-5 solids washing process will be treated in the existing GWETS system.

4.3.1 GWETS Operational Impacts and Modifications

4.3.1.1 Flow Equalization and GW-11 Load Impacts

Tetra Tech evaluated the flow equalization process, including the anticipated loading to the GW-11 equalization facility resulting from the washing of AP-5 solids and found that the increased loading could be handled by equalization in GW-11 as shown in Table 3-3[5].

4.3.1.2 Process Description

The existing groundwater extraction, flow equalization, and preliminary treatment system is illustrated in the Process Flow Diagram in Figure 4-3. After equalization and preliminary treatment, water is pumped to the FBRs for perchlorate removal. Perchlorate-containing solution from AP-5 will be mixed with the extracted groundwater in GW-11 and treated in the existing FBRs. Overflow from the thickener will be conveyed in batch mode to GW-11, where it will be mixed with water from the extraction well fields before treatment in the FBRs. The influx of water from the washing of solids from AP-5 will be adjusted based on FBR loading and effluent discharge requirements. As shown in Table 3-3, the solids washing process will be operated in a batch mode to ensure that the FBR loading is maintained at or below 80% of the design load. This means that the solids washing process can proceed on the basis of one batch per day.

[5] Table 3-3 was created based on current flow and loading information and the assumption that inactive reactors will be incorporated into the processing. The implementation of projects under the NERT Continuous Optimization Program will result in increased loading to the FBR plant and could cause an extension in the timeframe for AP-5 solids treatment.

Depending on actual perchlorate concentration in the wash water, the number of batches can be adjusted.

4.3.1.3 FBR Modifications and Operational Requirements

Tetra Tech, along with ETI, evaluated whether the additional loading from AP-5 and the 2013 GWETS optimization project would push the equalized influent over the contractual cap of 966 lbs. of equivalent load averaged over a 6-month period. The system is currently operating without two of the FBRs in each of the two treatment stages as, according to ETI personnel (ETI 2014), FBRs 3 and 4 in Stage 1 and FBRs 5 and 6 in stage 2 are currently off line. It is not expected that the additional load can be handled with the current configuration. However, by putting the inactive units back into service, the additional AP-5 water can be treated without compromising load and flow limitations. Furthermore, caustic addition will be needed to counteract the generation of additional carbonic acid. Urea addition may be required to maintain the nitrogen influent requirements depending on the nitrogen content of the AP-5 fluids, and the air compressor capacity will have to be assessed for possible upgrade. The expansion could require increased labor support for the operation.

The required, expedited removal of perchlorate-containing residuals from AP-5 can be achieved without compromising the operational limitations for the GWETS as long as the operational adjustments described above are implemented. The 2-million gallon storage tank that can accommodate the entire volume of slurry removed from AP-5 allows for flexible, batch-wise addition of AP-5 solution to GW-11 for further treatment in the FBRs that will continue until the contents of the storage tank have been removed. Based on ETI communication (ETI 2014), the process and O&M impacts that need to be evaluated include:

a. Potential need for urea addition or ammonia limitation
b. Caustic addition to counteract generation of carbonic acid
c. Assessment of compressed air capacity for potential upgrade
d. Additional labor required for operation
e. Disposal of non-hazardous solids

ETI has indicated that there are no issues in treating the wash water with the current system as long as the equivalent loading on the FBR (calculated based on perchlorate, chlorate, and nitrate concentrations) is maintained at approximately 80 percent of the design load for the FBRs. The design load is 1,893 pounds per day. An allowance for the operational costs (items a, b, and d, above) are included in the cost estimate presented in Section 6. An additional air compressor is included in the capital cost estimate. No other capital expenditures to improve the GWETS are anticipated to be required.

5.0 START-UP, COMMISSIONING, AND OPERATION

Tetra Tech will work with ETI to update the NERT Perchlorate Treatment System Henderson, Nevada Operations Manual, all existing and relevant SOPs, and all health and safety plans for operating the GWETS with the modifications for handling the additional load from AP-5. Tetra Tech will work with ETI to prepare a contingency plan for the AP-5 solids removal project. The contingency plan will include responses to unexpected events including long-term power outages. To the extent necessary, revised documentation will be provided to NDEP if required by the permits as outlined in Section 3.5 of this Work Plan.

Once Step 1 and the solids washing process is constructed for Step 2, ETI will be responsible for the washing of the solids (Step 2a), the treatment of the wash water (Step 2b). ETI will also perform the sampling and testing of the treated solids before disposal to assure that the solids comply with the allowable disposal criteria. ETI will be responsible for managing and operating the process. The Trust will amend its O&M Agreement with ETI as necessary to cover the additional costs for labor, chemicals, and non-hazardous waste disposal.

During Step 2, Tetra Tech will remain in an oversight role to perform the following:

- Participate in solids washing system start-up and commissioning
- Continued weekly GWETS inspections to include inspection of solids washing system

6.0 IMPLEMENTATION COSTS

Preliminary budgetary estimates of the capital and operating costs, for removal of the solids from AP-5 and treatment of the solids and water, are presented in Table 2-2. A more detailed cost estimate, based on a more developed design and vendor equipment quotes, will be prepared as part of the design phase of the project.

6.1 Step 1: Removal of AP-5 Solids

The new tank will be designed for storage of the entire slurry volume to be removed from AP-5 to allow for quick removal of all the perchlorate-containing solids in the pond. Since the removal activities will be of short duration, it is preferable to hire a specialized subcontractor and use rental equipment for this activity. The major capital expense for the solids removal activities is the purchase and installation of a 2-million gallon storage tank with agitator system. The capital cost for the solids removal process is estimated at approximately $4,400,000.

6.2 Step 2: Treatment Plant for Solids Removed from AP-5 and Wash Water

The total capital cost for the treatment plant for solids removed from AP-5 is estimated at approximately $3,000,000.

6.3 Operation of Solids Treatment System and Increased Costs for GWETS Operation

Based on the evaluations of the impact of AP-5 water on the GW-11 Equalization Pond and the FBRs in Section 4.3, it was concluded that the existing process units can handle the additional load, but that chemical additions, reconditioning of inactive units, and additional labor will be required.

6.4 Operation and Maintenance Cost Summary

A preliminary opinion of operations and maintenance costs for the removal of solids from AP-5; the solids treatment system including the continuous agitation in the storage tank, mixing system, solids separation, and dewatering; and the treatment of water from solids washing is approximately $5,070,000. ETI provided their current relevant costs for our use in this estimate, however, upon approval of this work plan, Tetra Tech will prepare a detailed operations and maintenance cost estimate and revise the current estimates if needed.

7.0 REUSABLE EQUIPMENT

The full capital cost for implementing this work plan is not a sunk cost. There are certain portions of the project that can be reused to support the current GWETS operation. The portions of the project that can be reused include: 1) the 2-million gallon storage tank; 2) the filter press; and 3) the air compressor.

GW-11, currently used as the influent equalization basin for the GWETS, is a large 11-acre pond with approximately 60 million gallons of usable volume. The volume is typically maintained around 42 million gallons to ensure 15 days of emergency storage. GW-11 will be operated until all perchlorate-containing water from AP-5 has been treated. Tetra Tech's May 2014 evaluation of the need for continued use of GW-11 as equalization basin concluded that equalization needs for the GWETS can be met with a tank volume of 1.5 million gallons or less (Tetra Tech 2014). This means that the storage tank for AP-5 slurry, which exceeds this volume requirement, can be used as an equalization tank, allowing GW-11 to be drained, solids removed, and used strictly for emergency storage.

The air compressor that will be purchased for the AP-5 project will be sized so that it can be used to replace one of the current air compressors. One of the current compressors is old and requires significant maintenance.

The filter press can be reused if the GWTP is expanded to handle more flow requiring removal of hexavalent chromium. The larger filter press that will be installed as part of the AP-5 project will easily handle solids from an expanded GWTP.

8.0 SCHEDULE

Preliminary project schedules are discussed below. Actual project implementation schedules will be developed during the future design stage.

8.1 Removal of AP-5 Solids

The schedule for removal of solids from AP-5 is shown in Figure 8-1. The removal of the solids from AP-5 cannot be started until the tank and mixing system have been constructed and are operational. It will take approximately 10 months from project startup until perchlorate-containing solids removal from AP-5 has been completed. The design phase will include an assessment of potential risks to successfully achieve the estimated schedule. Contingency measures will also be developed to respond to the identified schedule risks.

8.2 Treatment of Solids Removed from AP-5 and Wash Water

The schedule for treatment of solids removed from AP-5 is tied to the treatment capacity of the GWETS since removal of slurry from the storage tank will depend on the amount of water accepted by the system based on allowable loading on the FBRs as shown in Section 3.6.3. Based on current information about operational requirements and the assumption that inactive reactors will be incorporated into the processing, the time period for treatment was estimated to be close to 20 months (see Footnote 5 in Section 4.3.1.1). The slurry can safely remain in the large storage tank for extended periods of time should the timeframe for treatment be extended due to the NERT Continuous Optimization Program. The treatment schedule is shown with the solids removal schedule for the AP-5 Pond in Figure 8-1.

9.0 REFERENCES

Aerospace Corporation, The. 2001, October 25. Assessment of Perchlorate Releases in Launch Operations, Aerospace Report No. TR-2001(1306)-3.

DEKRA, 2014, February 13. Letter Report, UN DOT Classification Testing Results.

Department of Toxic Substance Control, Draft Background Documents for Perchlorate Workshop, Section 8 – Perchlorate Wastes, https://www.dtsc.ca.gov/LawsRegsPolicies/Regs/upload/HWMP_WS_dPerch-Sec8.pdf, Perchlorate Best Management Practices Workshop, November 1, 2005.

Envirogen Technologies, Inc. (ETI), 2014, September 16. Personal communication between Mike Delvecchio of ETI and Ellen Kaastrup of Tetra Tech.

ENVIRON International Corporation (ENVIRON), 2012a, March 30. Memo to Shannon Harbour of NDEP: Proposal to Discontinue Treatment of AP-5 Pond Water at NERT Facility

ENVIRON International Corporation (ENVIRON), 2012b, September 28. AP-5 Pond Solids Characterization and Disposal Work Plan, Nevada Environmental Response Trust Site, Henderson, Nevada.

ENVIRON, 2014, May 16. Letter to Frank Johns of Tetra Tech: AP-5 Pond Solids Characterization; Nevada Environmental Response Trust Site; Henderson, Nevada (Facility ID # H-000539)

ENVIRON, 2013, October. Site Management Plan (SMP), Revision 1, Nevada Environmental Response Trust Site, Henderson Nevada.

NDEP, 2013, Nevada Division of Environmental Protection Remediation of the BMI Complex Table – Basic Comparison Levels, http://ndep.nv.gov/bmi/docs/bcl_ calculations _ august _ 2013.pdf.

Tetra Tech, 2014, May 29. NERT Equalization Volume Analysis.

TABLES

Table 2-1 Estimated Budget to Implement Alternative 2

Step	Process Description	Cost Assumptions	Total Cost ($)
1	Removal of Solids from AP-5	Solids removal: $700,000	2,500,000
		BT tank rehabilitation: $200,000	
		Tank mixing units (4): $1,600,000	
		Operations and maintenance costs assumed to be the same as for Alternative 3 (labor, utilities and chemicals, regulatory compliance, maintenance)	70,000
2a	Treatment of Solids from AP-5	Capital costs assumed to be the same as for Alternative 3	3,000,000
		Operations and maintenance costs assumed to be the same as for Alternative 3 (sludge disposal, labor, utilities and chemicals, regulatory compliance, maintenance)	1,000,000
2b	Treatment of Water from Solids Washing	Capital costs assumed to be the same as for Alternative 3	Included in 2a
		Operations and maintenance costs assumed to be the same as for Alternative 3 (utilities and chemicals)	4,000,000
Total			**10,570,000**

Table 2-2 Estimated Budget to Implement Alternative 3

Step	Process Description	Cost Assumptions	Total Cost ($)
1	Removal of Solids from AP-5	Solids Removal: $700,000	4,400,000
		Storage Tank Construction: $1,800,000	
		Tank Mixing System: $1,900,000	
		Operations and maintenance costs	70,000
2a	Treatment of Solids from AP-5	Filter Press and Air Compressor: $900,000	3,000,000
		Thickener and Sludge Storage Tank Rehab and Relocation: $300,000	
		Piping, Pumps and Instrumentation: $1,800,000	
		Operations and maintenance costs	1,000,000
2b	Treatment of Water from Solids Washing	Capital costs	Included in 2a
		Operations and maintenance costs	4,000,000
Total			**12,470,000**

Note: Detailed budgets to be submitted upon approval of work plan.

Table 2-3 Evaluation of Alternatives for AP-5 Pond Solids Removal

Subject	Alternative		
	1	2	3
	No Further Action	**Use of Existing BT Tanks for Storage**	**Use of Large New Storage Tank**
Description	AP-5 solids are kept wet through continuous filling with Stabilized Lake Mead Water.	Three-mobilization removal of perchlorate slurry from pond; Storage of slurry in existing BT tanks with 600,000 gal total capacity; Solids treatment; Treatment of water in GWETS	One-mobilization removal of perchlorate slurry from pond; Storage of slurry in new 2-million gallon tank; Solids treatment; Treatment of water in GWETS
Effectiveness	Not effective in removing the perchlorate solids and reducing risk. May result in migration of perchlorate to groundwater if liner is compromised.	Effective for removal of perchlorate, but requires three separate removal efforts spaced far apart in time.	Effective for timely removal of perchlorate that minimizes the potential for infiltration of contamination into groundwater.
Implementability	Easily implemented.	Moderately easy to implement. Requires multiple mobilizations, assembly and disassembly of crane and slurry pump for removal of perchlorate. Requires construction of solids mixing, separation, and dewatering system.	Moderately easy to implement. Only one crane and pump mobilization required for slurry removal from AP-5. Requires construction of large storage tank and solids mixing, separation, and dewatering system.
Cost	Low. Only costs are O&M costs for maintaining dewatering system in AP-5 and treating water in GWETS. However, Alternatives 2 or 3 may be required should NDEP revoke the Permit due to the leak in the primary liner.	$ 10.57 M for Phases I and II. Cost benefit achieved through use of existing tanks for storage. Costs for slurry removal from pond increased through need for multiple crane and pump mobilizations.	$ 12.47 M for Phases I and II. Significantly higher cost than Alternative 2 is associated with large new storage tank and mixer. However, cost can be offset by future use of tank for other storage.
Time for Solids Removal	AP-5 Pond solids are not removed under this alternative.	Time to final solids removal from pond is 23 months. Delayed removal increases the potential for further liner damage and migration of perchlorate-contamination to groundwater.	Time to final solids removal from pond is 10 months.

Table 2-4 Comparison of Alternatives and Selection of Preferred Alternative for Removal and Treatment of Perchlorate from AP-5 Pond

Alternative	Comparison	Selection
1. No Further Action	Not effective in eliminating current risk or addressing liner leak and potential for increased future risk combined with long-term O&M requirements, makes this alternative unacceptable.	**Reject.** Not effective for removing perchlorate solids from pond or permit compliance.
2. Use of Existing BT Tanks for Storage	Effective for removing perchlorate from pond, but limited storage capacity and the resulting need for extended timeframe to remove perchlorate increases the potential for groundwater contamination. Risks outweigh benefit of lower cost compared with Alternative 3.	**Reject** due to extended removal period and potential for groundwater contamination.
3. Use of Large New Storage Tank	Achieves the most effective removal of perchlorate from pond as it only requires one short-term removal effort, allowing for quick removal of solids from AP-5.	**Retain** due to rapid removal of perchlorate solids from AP-5 allowing for expedited closure. (High cost is offset by shorter time to AP-5 closure and potential future use of tank).

Table 3-1 Water Quality

Parameters	Units	30-day Average	30-day Average Loading (lbs)	Daily Max
Flow Rate	MGD	1.45	---	1.75
BOD5 (inhibited)	mg/L	25	254	40
Perchlorate	ug/L	18	0.22	M&R
pH	S.U.	6.5-9.0	---	---
Hexavalent Chromium	mg/L	M&R[1]	M&R	0.01
Total Chromium	mg/L	M&R	M&R	0.1
TSS	mg/L	135	1,634	M&R
Total Iron	mg/L	10	121.03	M&R
Manganese	mg/L	5	60.52	---
Total Phosphorus as P	mg/L	M&R	20*	M&R
Total Ammonia as N	mg/L	M&R	40**	M&R
Color	ACU	M&R	---	M&R
DO	mg/L	M&R	M&R	M&R
TIN as N	mg/L	M&R	M&R	M&R
Kjeldahl Nitrogen as N	mg/L	M&R	M&R	M&R
Nitrate as N	mg/L	M&R	M&R	---
Chlorate	mg/L	M&R	M&R	---
Sulfate	mg/L	M&R	M&R	---
Sulfide	mg/L	M&R	M&R	---
TDS	mg/L	M&R	M&R	---
Oil & Grease	mg/L	M&R	M&R	---
Boron	mg/L	M&R	M&R	---
Chloride	mg/L	M&R	M&R	---

[1] M&R = Monitor and Report

* If the load in the Wash exceeds 434 ppd from 03/01-10/31, the permittee shall negotiate an Individual Waste Load Allocation (IWLA), or other approved method that ensures the water quality standards (WQS) will be met.

** If the load in the Wash exceeds 970 ppd from 04/01-09/30, the permittee shall negotiate an IWLA, or other approved method which ensures the WQS will be met.

Table 3-2 Projected Volume, Density, Weight, and Concentration per Solids Treatment Batch

Concentration (mg/kg)	Perchlorate	Ammonia
Maximum	380,000	14,000
Average	242,857	12,429

GW-11 Pond Avg. Volume[1]	46,856,000	Gallons
AP-5 Pond Slurry Volume	2,200 444,371	Cu Yd Gallons
AP-5 Pond Slurry Concentration	80	%
AP-5 Pond Slurry Density	1,575	kg/m^3
AP-5 Pond Slurry	2,649,371	kg
AP-5 Pond Solids	2,119,497	kg
Water Added[2]	1,333,114	Gallons
Slurry Storage Tank Slurry Volume	1,777,486 6,727,098	Gallons kg
Slurry Storage Tank Slurry Conc.	23	%
Slurry Storage Tank Slurry Density	1,115	kg/m^3
Thickener Tank Volume	20,250	Gallons
Thickener Dilution Ratio	3:1	
Slurry from Slurry Storage Tank per Batch	5,063	Gallons
Slurry from Slurry Storage Tank per Batch	21,364	kg
Solids from Slurry Storage Tank per Batch	4,829	kg
Water Added to Thickener	15,188 57,479	Gallons kg
Thickener Slurry Concentration	6	%
Thickener Slurry Density	1,029	kg/m^3
Thickener Batch Cycle	351	Cycle
Summary	Average	Maximum
Perchlorate Loading to GW-11 (kg per cycle)	1466	2294
GW-11 Perchlorate Concentration Increase (mg/L per cycle)	8	13
Ammonia Loading to GW-11 (kg per cycle)	75	85
GW-11 Ammonia Concentration Increase (mg/L per cycle)	0.4	0.5

Notes:

1: Average volume of GW-11 between January 2013 and October 2014.

2: Water added using a 3:1 dilution ratio.

Table 3-3 Projected FBR Loading from AP-5 Wash Water

Assumptions

GW-11 starting volume		42,000,000	million gallons
Slurry from Storage Tank to Thickener per Batch		5,063	gallons
Solids from Storage Tank to Thickener per Batch		4,829	kg
Wash Water Concentration	ClO4	84,687	mg/L
	ClO3	980	mg/L
	NO3 as N	350	mg/L
Total well flow rate		935	gpm
Maximum FBR equivalent load		1893	lbs/day

Month	GW-11 Volume (gal)	GW-11 Pond Concentrations ClO4 (mg/L)	ClO3 (mg/L)	NO3 as N (mg/L)	Net Evaporation from GW-11	Flow from GW-11 to FBR (gpm)	Volume Removed from GW-11	Wash Water and Filtrate Flow (gal/month)	AP-5 ClO4 Transferred (tons)	AP-5 ClO3 Transferred (tons)	AP-5 NO3 Transferred (tons)	Well Water Added (gal/month)	Equivalent Load to FBRs (lbs/day)	System Load (% Design Capacity)	Cumulative ClO4 Removed (tons)	Cumulative ClO3 Removed (tons)	Cumulative NO3 Removed (tons)
Oct-15	42,000,000	120	240	18	2,784,032	958	41,937,408	365,920	29	0.34	0.12	40,930,560	905	48%	29	0.34	0.12
Nov-15	39,581,888	323	257	20	2,271,360	958	41,937,408	365,920	29	0.34	0.12	40,930,560	1,379	73%	59	0.68	0.24
Dec-15	37,676,448	316	247	19	648,464	958	41,937,408	365,920	29	0.34	0.12	40,930,560	1,336	71%	88	1.02	0.36
Jan-16	37,393,904	303	237	18	739,464	958	41,937,408	365,920	29	0.34	0.12	40,930,560	1,281	68%	117	1.36	0.48
Feb-16	37,020,360	305	239	19	(2,396,416)	958	41,937,408	365,920	29	0.34	0.12	40,930,560	1,291	68%	147	1.70	0.61
Mar-16	39,782,696	281	220	17	(925,192)	958	41,937,408	365,920	29	0.34	0.12	40,930,560	1,188	63%	176	2.04	0.73
Apr-16	41,073,808	293	230	18	(483,080)	958	41,937,408	365,920	29	0.34	0.12	40,930,560	1,243	66%	205	2.38	0.85
May-16	41,922,808	296	232	18	60,032	958	41,937,408	365,920	29	0.34	0.12	40,930,560	1,253	66%	235	2.71	0.97
Jun-16	42,228,696	300	235	18	907,032	958	41,937,408	365,920	29	0.34	0.12	40,930,560	1,269	67%	264	3.05	1.09
Jul-16	41,687,584	306	239	19	2,115,808	958	41,937,408	365,920	29	0.34	0.12	40,930,560	1,295	68%	293	3.39	1.21
Aug-16	39,937,696	315	247	19	3,029,584	958	41,937,408	365,920	29	0.34	0.12	40,930,560	1,334	70%	323	3.73	1.33
Sep-16	37,274,032	323	253	20	2,050,256	958	41,937,408	365,920	29	0.34	0.12	40,930,560	1,366	72%	352	4.07	1.45
Oct-16	35,589,696	313	245	19	2,784,032	958	41,937,408	365,920	29	0.34	0.12	40,930,560	1,327	70%	381	4.41	1.58
Nov-16	33,171,584	322	252	20	2,271,360	958	41,937,408	365,920	29	0.34	0.12	40,930,560	1,362	72%	411	4.75	1.70
Dec-16	31,266,144	315	246	19	648,464	958	41,937,408	365,920	29	0.34	0.12	40,930,560	1,333	70%	440	5.09	1.82
Jan-17	30,983,600	300	235	18	739,464	958	41,937,408	365,920	29	0.34	0.12	40,930,560	1,271	67%	469	5.43	1.94
Feb-17	30,610,056	306	240	19	(2,396,416)	958	41,937,408	365,920	29	0.34	0.12	40,930,560	1,296	68%	499	5.77	2.06
Mar-17	33,372,392	275	216	17	(925,192)	958	41,937,408	365,920	29	0.34	0.12	40,930,560	1,166	62%	528	6.11	2.18

Abbreviations:

gal gallons
gpm gallons per minute
kg kilograms
lbs pounds
mg/L milligrams per liter

Table 4-1 Submersible Pump Characteristics

Pump Location	Power (HP-V-Hz)	Capacity (gpm)	Operating Head (ft)	Percent Solids (%)
AP-5	30-460-60	200	100	30

Table 4-2 Thickener Dimensions

Tank	Diameter (ft)	Operating Height (ft)	Operating Capacity (gal)
Thickener	20	16.5	38,800

Table 4-3 Sludge Storage Dimensions

Tank	Diameter (ft)	Operating Height (ft)	Operating Capacity (gal)
Sludge Storage	13	16	8,200

Table 4-4 Filter Press Specifications

Type	Filter Plate Size (mm)	Filter Capacity (cu. Ft)	Number of Chambers
Plate and Frame	1500	153	75

FIGURES

AP-5 POND GENERAL LOCATION

0 300 600
SCALE IN FEET

TETRA TECH
www.tetratech.com
1576 Sherman Street, Suite 100
Denver, CO 80203
Phone: (303) 825-5999 Fax: (303) 825-0642

NEVADA ENVIRONMENTAL RESPONSE TRUST

AP-5 POND SOLIDS REMOVAL WORK PLAN
HENDERSON, NEVADA

AP-5 POND AND EXISTING SYSTEM

Project No.:	133-20192-14009
Date:	10/ – /14
Designed By:	FGM

FIGURE 1-1

Copyright: Tetra Tech

CAD FILE: NERT-AP-5 POND SITE LOCATION-REV B_2.DWG

12/18/2014 1:21:07 PM - P:\20192\133-20192-14009\CAD\SHEETFILES\NERT-AP-5\DRAWINGS-REV B SUBMISSION-103014\NERT-AP-5 POND SITE LOCATION-REV B_2.DWG - CLOUD, JARED

Figure 2-1. AP-5 Pond, September 2014

Figure 2-2. Storage in BT Tanks

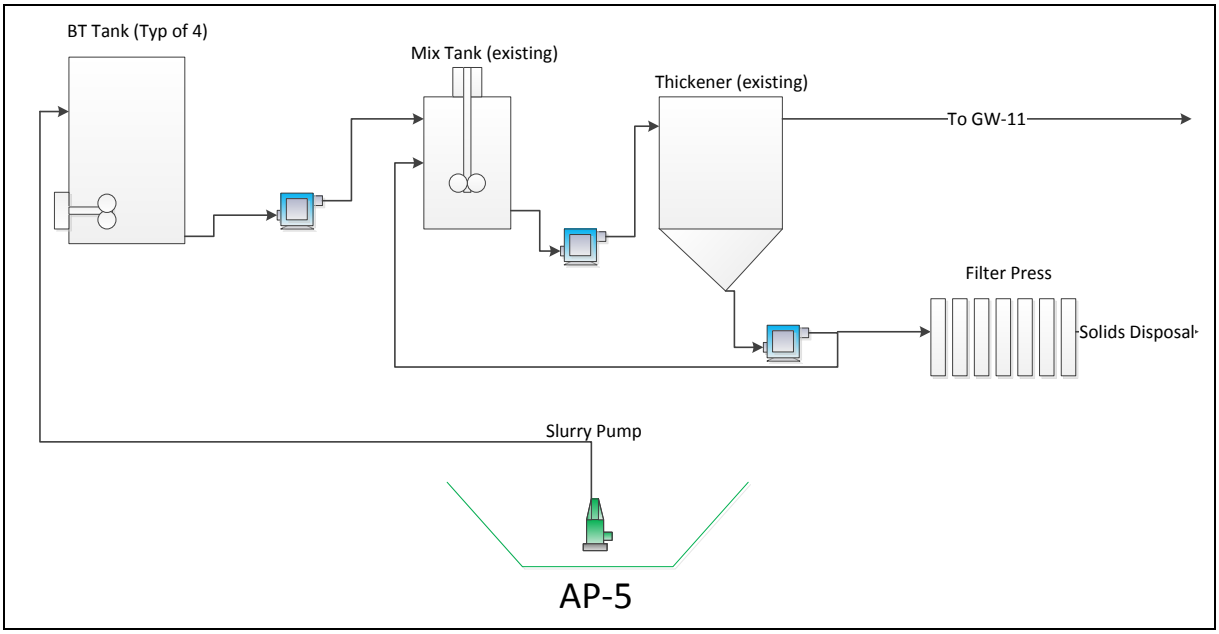

Figure 2-3. Storage in New Tank

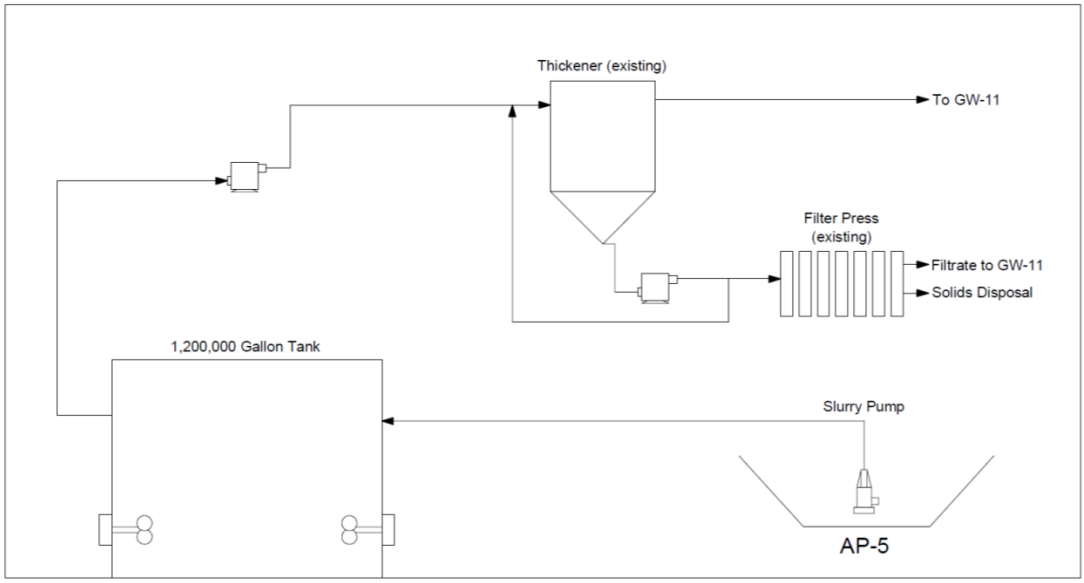

Activity ID	Activity Name	Orig Dur	Start	Finish	Total Float
Alternative 2		704	13-Apr-15	21-Dec-17	217
AP - 5 Solids Removal		704	13-Apr-15	21-Dec-17	217
General		704	13-Apr-15	21-Dec-17	217
General Activities		704	13-Apr-15	21-Dec-17	217
ALT02-1100	ALTERNATIVE 02 - Mobilization	10	13-Apr-15	24-Apr-15	217
ALT02-9100	ALTERNATIVE 02 - Demobilization - Round 01	5	21-Jul-15	27-Jul-15	404
ALT02-1200	ALTERNATIVE 02 - Mobilization - Round 02	10	14-Apr-16	27-Apr-16	217
ALT02-9200	ALTERNATIVE 02 - Demobilization - Round 02	5	13-May-16	19-May-16	404
ALT02-1300	ALTERNATIVE 02 - Mobilization - Round 03	10	07-Feb-17	20-Feb-17	217
ALT02-9300	ALTERNATIVE 02 - Demobilization	5	15-Dec-17	21-Dec-17	217
Step 1: Removal of AP-5 Solids		487	27-Apr-15	07-Mar-17	217
Building the Storage Tank		50	27-Apr-15	03-Jul-15	217
ALT02-1110	ALTERNATIVE 02 - BT Tank Rehab	20	27-Apr-15	22-May-15	217
ALT02-1120	ALTERNATIVE 02 - Install Mixing System	30	25-May-15	03-Jul-15	217
Removal of the Slurry		437	06-Jul-15	07-Mar-17	217
ALTR02-1100	ALTERNATIVE 02 - Remove Slurry from the Pond - Round 01	11	06-Jul-15	20-Jul-15	217
ALTR02-1200	ALTERNATIVE 02 - Remove Slurry from the Pond - Round 02	11	28-Apr-16	12-May-16	217
ALTR02-1300	ALTERNATIVE 02 - Remove Slurry from the Pond - Round 03	11	21-Feb-17	07-Mar-17	217
Step 2: Treatment Plant for Solids Removed from AP-5 and Wash Water		628	21-Jul-15	14-Dec-17	217
Treatment Process		628	21-Jul-15	14-Dec-17	217
ALTR02-5100	ALTERNATIVE 02 - Begin Treatment of the Slurry - Round 01	202	21-Jul-15	27-Apr-16	217
ALTR02-5200	ALTERNATIVE 02 - Begin Treatment of the Slurry - Round 02	202	13-May-16	20-Feb-17	217
ALTR025300	ALTERNATIVE 02 - Begin Treatment of the Slurry - Round 03	202	08-Mar-17	14-Dec-17	217
Alternative 3		841	03-Aug-15	22-Oct-18	0
AP - 5 Solids Removal		841	03-Aug-15	22-Oct-18	0
Step 1: Removal of AP-5 Solids		157	03-Aug-15	08-Mar-16	684
Building the Storage Tank		124	03-Aug-15	21-Jan-16	717
P1BLS-1000	ALTERNATIVE 03 - Prepare Tank site for Foundation	20	03-Aug-15	28-Aug-15	78
P1BLS-2000	ALTERNATIVE 03 - Concrete for Foundation	45	31-Aug-15	30-Oct-15	78
P1BLS-1500	ALTERNATIVE 03 - Construct Spill Containment for Storage Tank	5	31-Aug-15	04-Sep-15	816
P1BLS-3500	ALTERNATIVE 03 - Prepare and Connect to Power Distribution System	25	02-Nov-15	04-Dec-15	92
P1BLS-5000	ALTERNATIVE 03 - Build Storage Tank	14	30-Nov-15	17-Dec-15	58
P1BLS-6000	ALTERNATIVE 03 - Build Mixing System	25	18-Dec-15	21-Jan-16	58
Removal of the Slurry		33	22-Jan-16	08-Mar-16	58
P1SLR-1000	ALTERNATIVE 03 - Remove Slurry from the Pond	33	22-Jan-16	08-Mar-16	58
Step 2: Treatment Plant for Solids Removed from AP-5 and Wash Water		686	07-Mar-16	22-Oct-18	0
Building the Treatment Components		60	07-Mar-16	27-May-16	0
P2BLT-5000	ALTERNATIVE 03 - Install/Build Treatment System Equipment	60	07-Mar-16	27-May-16	0
Treatment Process		626	30-May-16	22-Oct-18	0
P2TRT-1000	ALTERNATIVE 03 - Test and Preliminary Treatment	20	30-May-16	24-Jun-16	0
P2TRT-3000	ALTERNATIVE 03 - Treatment of the Slurry	606	27-Jun-16	22-Oct-18	0

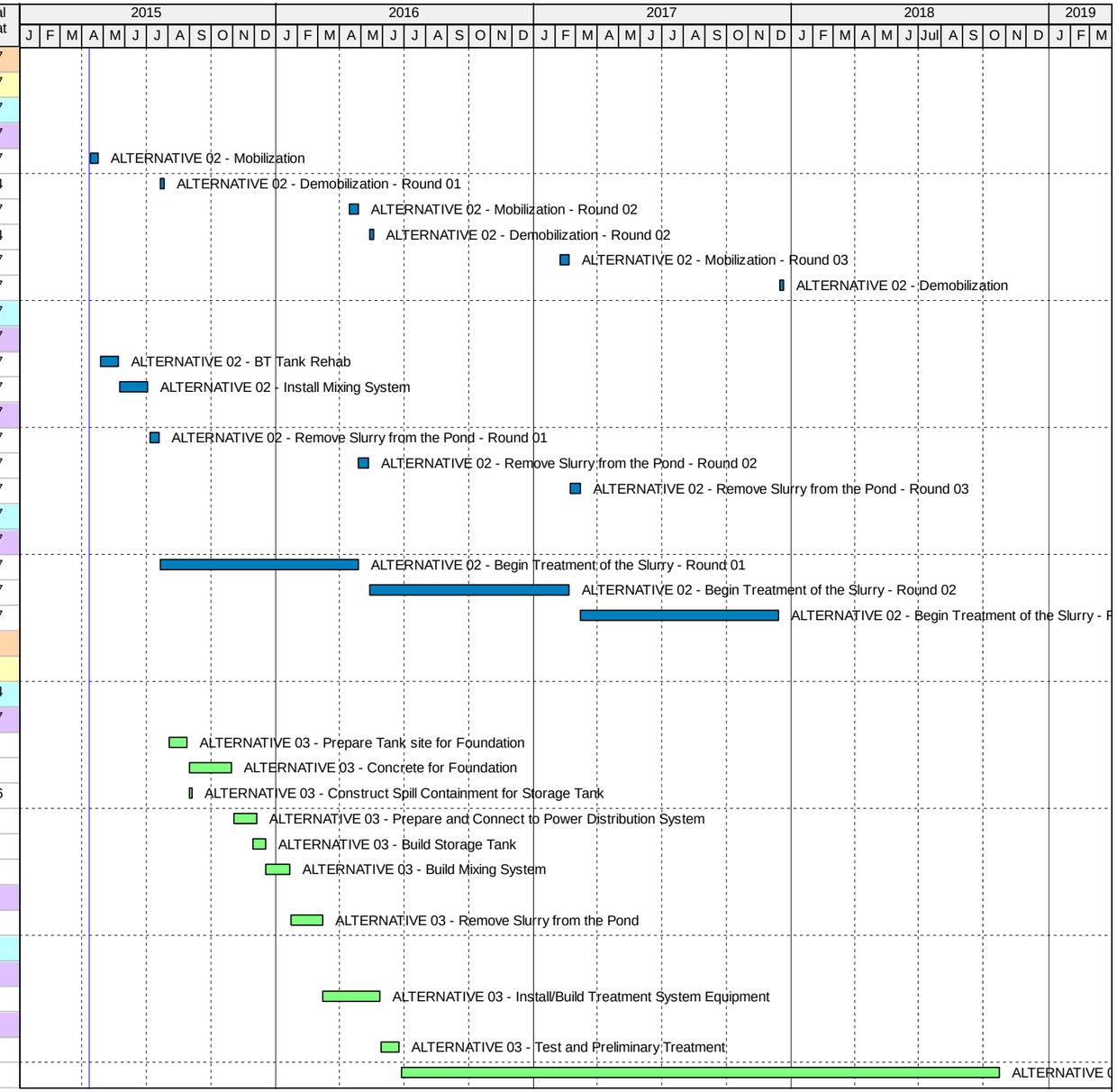

Alternative 02
Alternative 03

Nevada Environmental Response Trust | Phase II Work Plan for AP - 5 Closure

Figure 2-4. Implementation Schedules for Alternatives 2 and 3

TT Project #: 133-30192-14009

Project Start: 13-Apr-15
Project Finish: 22-Oct-18
Data Date: 12-Apr-15
Page 1 of 1

TETRATECH

AP-5 POND GENERAL LOCATION

0 300 600
SCALE IN FEET

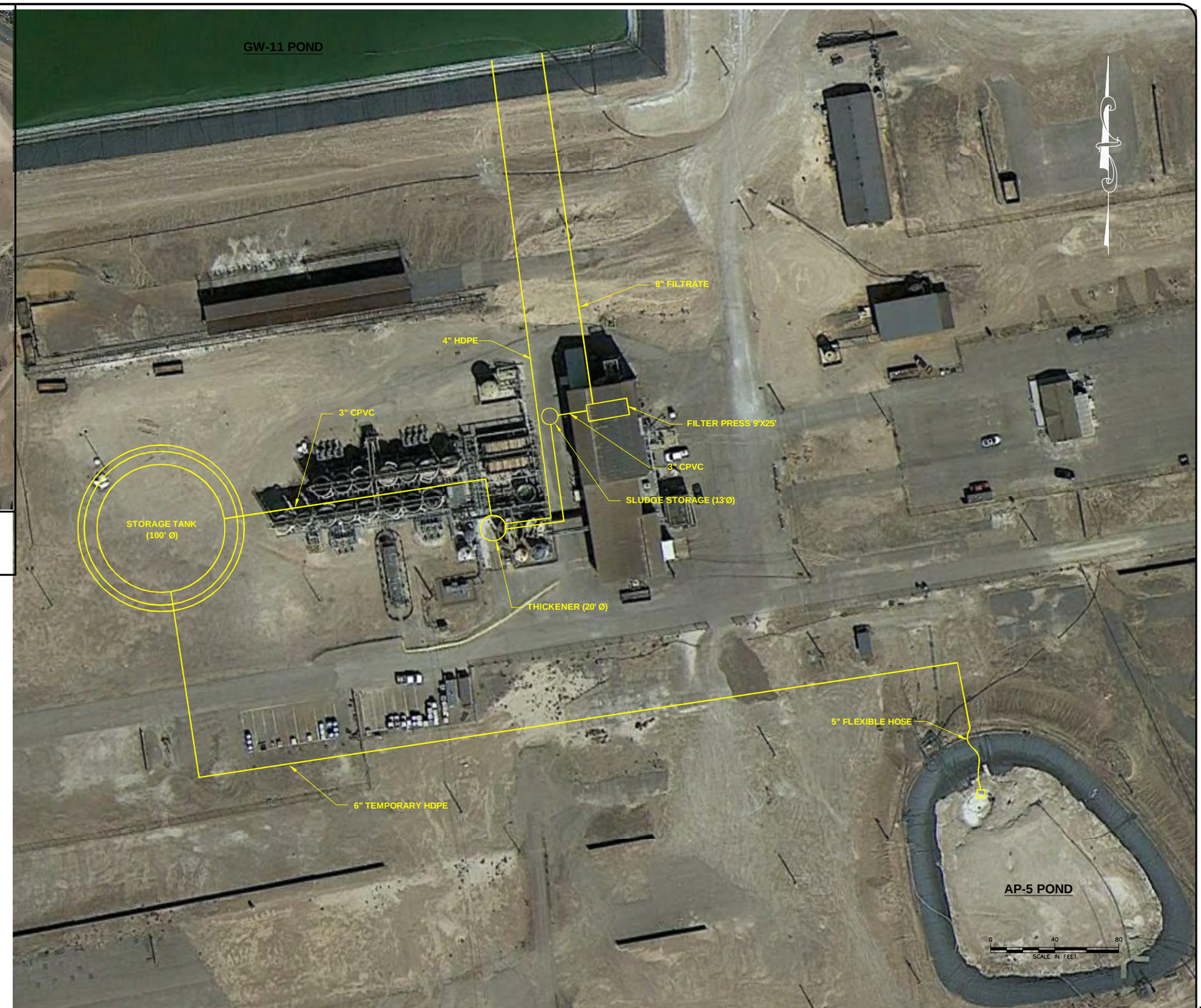

TETRA TECH

www.tetratech.com

1576 Sherman Street, Suite 100
Denver, CO 80203
Phone: (303) 825-5999 Fax: (303) 825-0642

NEVADA ENVIRONMENTAL RESPONSE TRUST

AP-5 POND SOLIDS REMOVAL WORK PLAN
HENDERSON, NEVADA

AP-5 POND, EXISTING SYSTEM AND AP-5 MODIFICATIONS

Project No.:	133-20192-14009
Date:	10/ – /14
Designed By:	FGM

FIGURE 4-1

Copyright: Tetra Tech

12/18/2014 1:15:48 PM - P:\20192\133-20192-14009\CAD\SHEETFILES\NERT-AP-5\DRAWINGS-REV B SUBMISSION-103014\NERT-AP-5 POND SITE MODIFICATIONS-REV B.DWG - CLOUD, JARED

CAD FILE: NERT-AP-5 POND SITE MODIFICATIONS-REV B.DWG

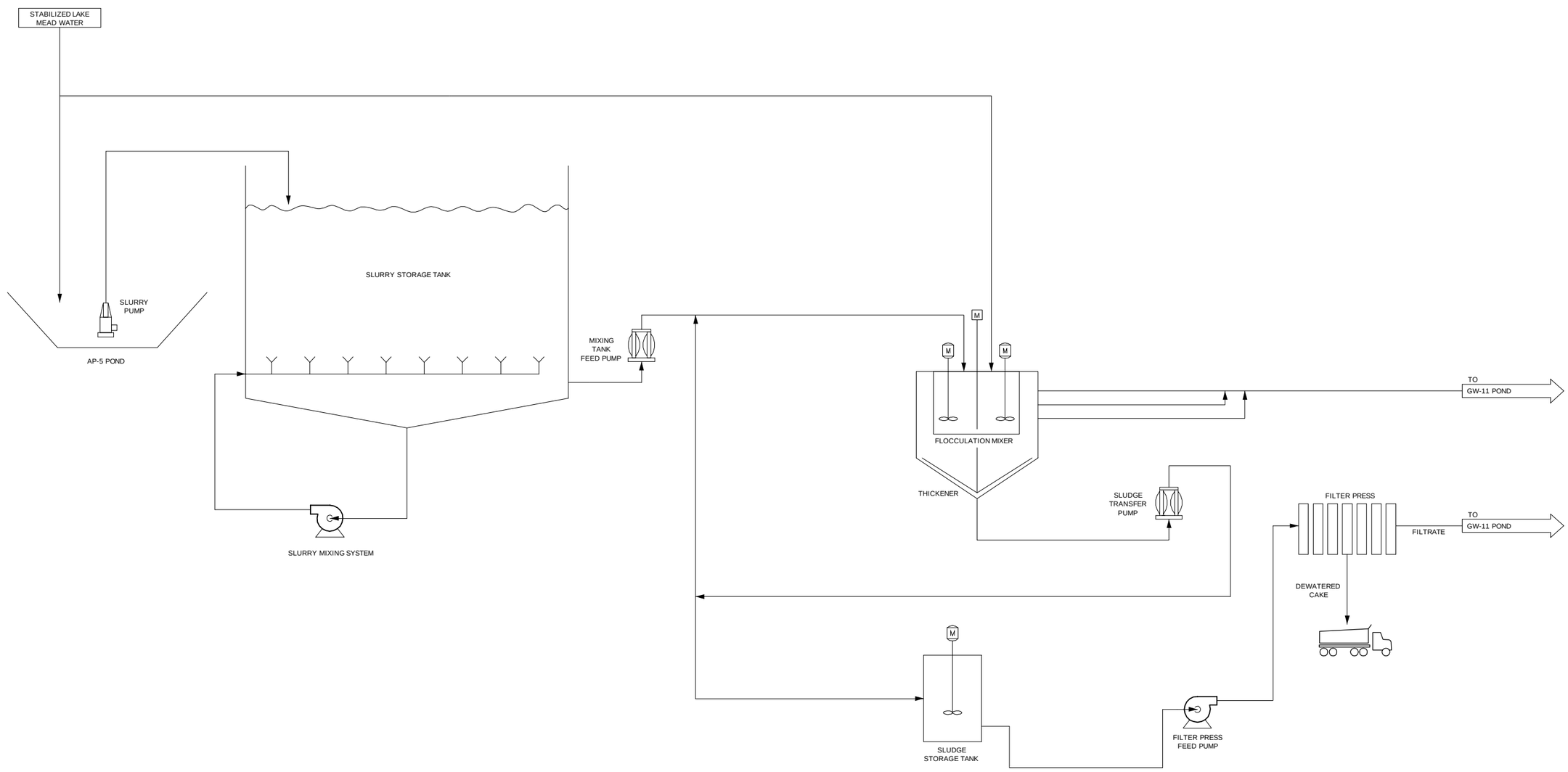

TETRA TECH

www.tetratech.com

1576 Sherman Street, Suite 100
Denver, CO 80203
Phone: (303) 825-5999 Fax: (303) 825-0642

NEVADA ENVIRONMENTAL RESPONSE TRUST

AP-5 POND SOLIDS REMOVAL WORK PLAN
HENDERSON, NEVADA

PROCESS FLOW DIAGRAM
AP-5 SYSTEM
(MODIFICATIONS)

Project No.:	133-20192-14009
Date:	10/ – /14
Designed By:	FGM

FIGURE 4-2

Copyright: Tetra Tech

CAD FILE: NERT-MODIFICATIONS -PFD-REV B.DWG

12/18/2014 1:22:07 PM - P:\20192\133-20192-14009\CAD\SHEETFILES\NERT-AP-5\DRAWINGS-REV B SUBMISSION-103014\NERT-MODIFICATIONS -PFD-REV B.DWG - CLOUD, JARED

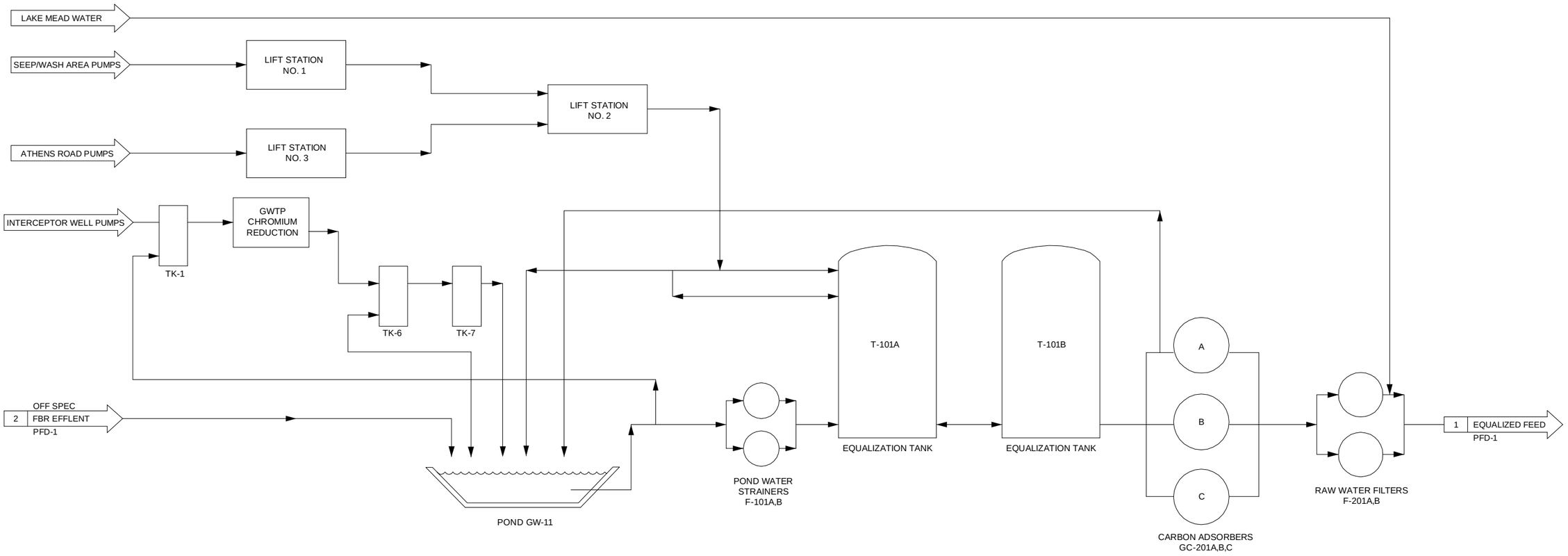

TETRA TECH

www.tetratech.com

1576 Sherman Street, Suite 100
Denver, CO 80203
Phone: (303) 825-5999 Fax: (303) 825-0642

NEVADA ENVIRONMENTAL RESPONSE TRUST

AP-5 POND SOLIDS REMOVAL WORK PLAN
HENDERSON, NEVADA

PROCESS FLOW DIAGRAM
EXISTING SYSTEM

Project No.:	133-20192-14009
Date:	10/ – /14
Designed By:	FGM

FIGURE 4-3

Copyright: Tetra Tech

CAD FILE: NERT-EXISTING -PFD-REV B.DWG

12/18/2014 1:23:14 PM - P:\20192\133-20192-14009\CAD\SHEETFILES\NERT-AP-5\DRAWINGS-REV B SUBMISSION-103014\NERT-EXISTING -PFD-REV B.DWG - CLOUD, JARED

Activity ID	Activity Name	Orig Dur	Start	Finish	Total Float
AP - 5 Solids Revoval		921	13-Apr-15	22-Oct-18	0
General		320	13-Apr-15	01-Jul-16	601
Design		90	13-Apr-15	14-Aug-15	26
DES-2000	Design Storage Tank with Hydraulic Mixing System	45	13-Apr-15	12-Jun-15	0
DES-4000	Design Foundation	45	04-May-15	03-Jul-15	56
DES-6000	Design Treatment System	45	15-Jun-15	14-Aug-15	0
Review & Approval		50	15-Jun-15	21-Aug-15	26
REV-2000	Review and Approval of Storage Tank with Agitator Design	5	15-Jun-15	19-Jun-15	56
REV-4000	Review and Approval of Foundation	5	06-Jul-15	10-Jul-15	56
REV-6000	Review and Approval of Treatment System	5	17-Aug-15	21-Aug-15	0
Permitting		93	20-Jun-15	20-Sep-15	38
PERM-2000	Clark County Permiting for Storage Tank with Agitator Design	30	20-Jun-15	19-Jul-15	80
PERM-4000	Clark County Permiting for Foundation	30	11-Jul-15	09-Aug-15	80
PERM-6000	Clark County Permiting for Treatment System	30	22-Aug-15	20-Sep-15	0
Procurement		165	20-Jul-15	04-Mar-16	2
Procurement of Storage Tank		95	20-Jul-15	27-Nov-15	58
PRCST-1000	Vendor NTP and Specs	10	20-Jul-15	31-Jul-15	58
PRCST-1500	Storage Tank Spill Containment Liner	15	20-Jul-15	07-Aug-15	88
PRCST-2000	Storage Tank and Hydraulic Mixing System	15	03-Aug-15	21-Aug-15	58
PRCST-3000	Storage Tank Shop Drawing Review	10	24-Aug-15	04-Sep-15	58
PRCST-5000	Storage Tank Fabrication and Delivery	60	07-Sep-15	27-Nov-15	58
Procurement of Hydrolic Mixing System		55	20-Jul-15	02-Oct-15	112
PRCAG-1000	Vendor NTP and Specs	10	20-Jul-15	31-Jul-15	112
PRCAG-2000	Hydraulic Mixing System Drawings	10	03-Aug-15	14-Aug-15	112
PRCAG-3000	Hydraulic Mixing System Shop Drawings Review	10	17-Aug-15	28-Aug-15	112
PRCAG-5000	Hydraulic Mixing System Fabrication and Delivery	25	31-Aug-15	02-Oct-15	112
Procurement of Treatment System		120	21-Sep-15	04-Mar-16	0
PRCTS-1000	Procurement of Treatment System Components	120	21-Sep-15	04-Mar-16	0
General Activities		235	10-Aug-15	01-Jul-16	601
GAC-1000	Mobilization	10	10-Aug-15	21-Aug-15	58
GAC-9000	Demobilization	5	27-Jun-16	01-Jul-16	601
Step 1: Removal of AP-5 Solids		142	24-Aug-15	08-Mar-16	58
Building the Storage Tank		109	24-Aug-15	21-Jan-16	58
P1BLS-1000	Prepare Tank site for Foundation	20	24-Aug-15	18-Sep-15	58
P1BLS-1500	Construct Spill Containment for Storage Tank	5	21-Sep-15	25-Sep-15	58
P1BLS-2000	Concrete for Foundation	45	28-Sep-15	27-Nov-15	58
P1BLS-3500	Prepare and Connect to Power Distribution System	25	30-Nov-15	01-Jan-16	72
P1BLS-5000	Build Storage Tank	14	30-Nov-15	17-Dec-15	58
P1BLS-6000	Build Mixing System	25	18-Dec-15	21-Jan-16	58
Removal of the Slurry		33	22-Jan-16	08-Mar-16	58
P1SLR-1000	Remove Slurry from the Pond	33	22-Jan-16	08-Mar-16	58
Step 2: Treatment Plant for Solids Removed from AP-5 and Wash Water		686	07-Mar-16	22-Oct-18	0
Building the Treatment Components		60	07-Mar-16	27-May-16	0
P2BLT-5000	Install/Build Treatment System Equipment	60	07-Mar-16	27-May-16	0
Treatment Process		626	30-May-16	22-Oct-18	0
P2TRT-1000	Test and Preliminary Treatment	20	30-May-16	24-Jun-16	0
P2TRT-3000	Treatment of the Slurry	606	27-Jun-16	22-Oct-18	0

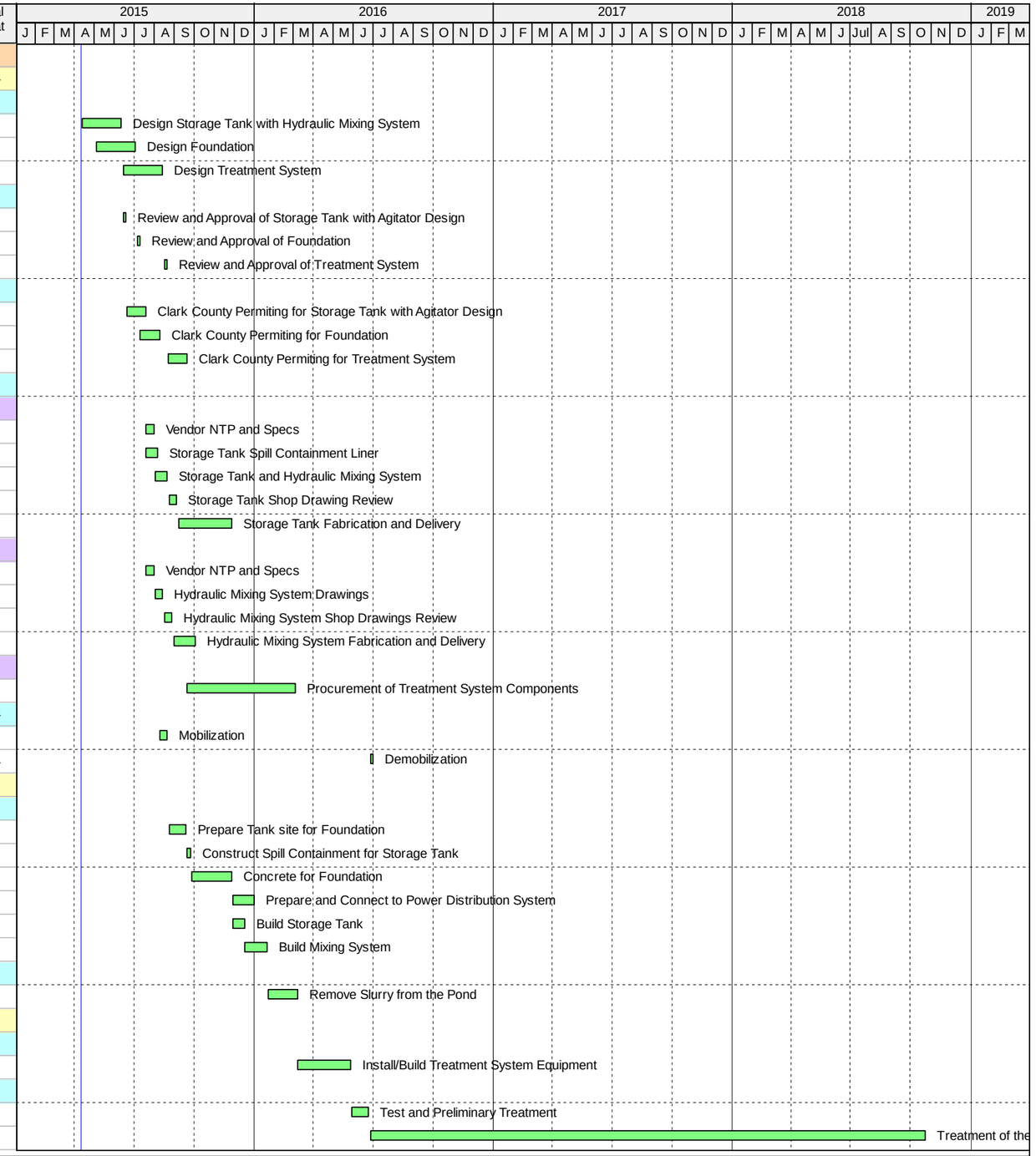

Alternative 03

Nevada Environmental Response Trust | Phase II Work Plan for AP - 5 Solids Removal

Figure 8-1. Implementation Schedule for Alternative 3

TT Project #: 133-30192-14009

Project Start: 13-Apr-15
Project Finish: 22-Oct-18
Data Date: 12-Apr-15
Page 1 of 1

TETRATECH

APPENDIX A
DESIGN DRAWINGS

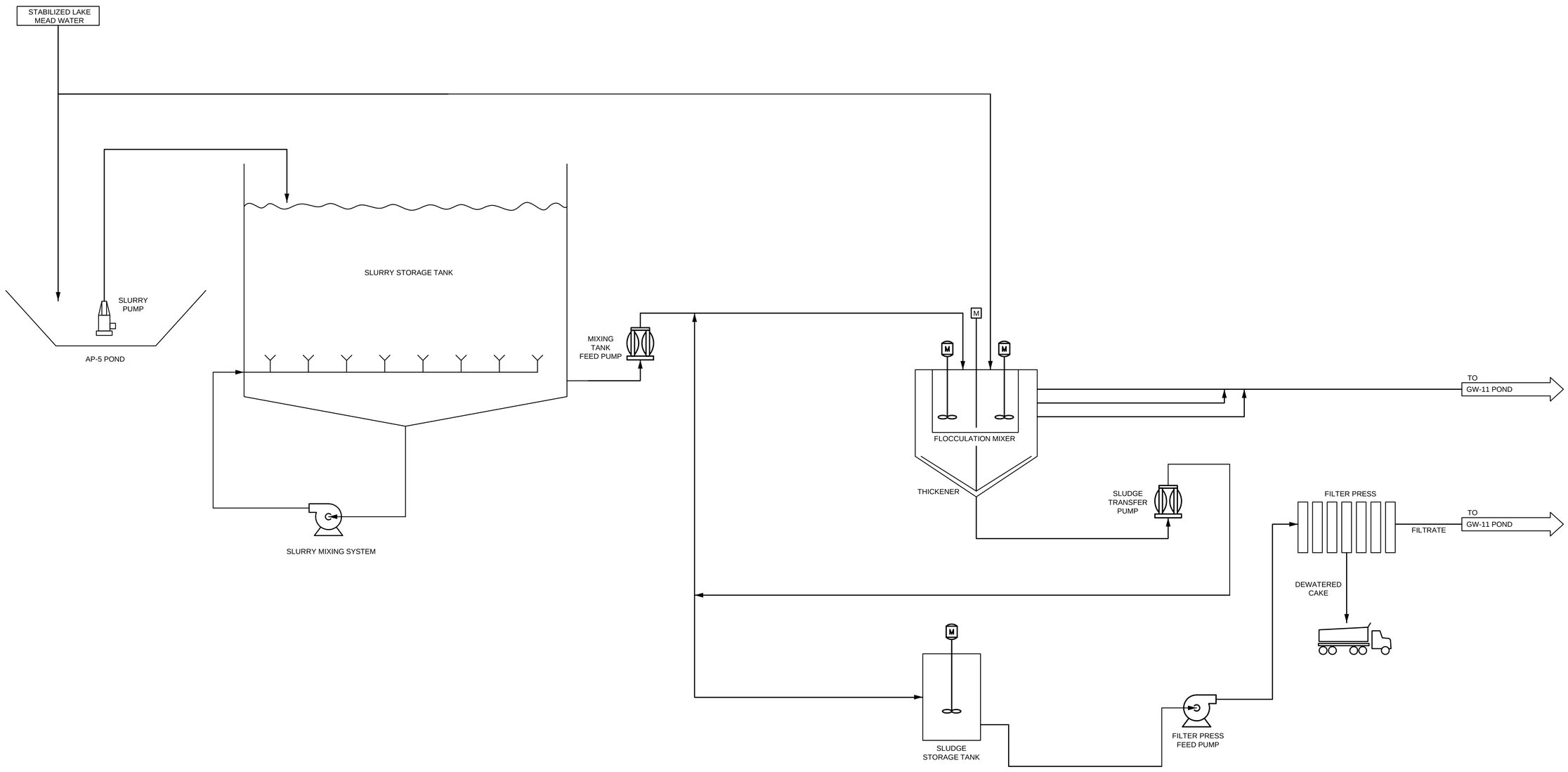

TETRA TECH
www.tetratech.com
1576 Sherman Street, Suite 100
Denver, CO 80203
Phone: (303) 825-5999 Fax: (303) 825-0642

NOT FOR CONSTRUCTION

MARK	DATE	DESCRIPTION	BY
A	09/18/14	DRAFT - REVIEW BY NERT	FJ
B	10/30/14	FINAL CLIENT WORK PLAN REVIEW	FJ

BUREAU OF CORRECTIVE ACTIONS, SPECIAL BRANCH PROJECTS
NEVADA ENVIRONMENTAL RESPONSE TRUST

AP-5 SOLIDS REMOVAL WORK PLAN, NERT SITE
HENDERSON, NEVADA

PROCESS FLOW DIAGRAM

Project No.:	133-20192-14009
Designed By:	RJ
Drawn By:	FGM
Checked By:	EK

P-101

Sheet

Bar Measures 1 inch

Copyright: Tetra Tech

12/23/2014 8:24:56 PM - P:\20192\133-20192-14009\CAD\SHEETFILES\NERT-AP-5\DRAWINGS-REV B SUBMISSION-103014\20192-14009.NERT-P101-B.DWG - GARLAND, DEENA

CAD FILE: 20192-14009-NERT-P101-B.DWG

VALVE AND PIPING SYMBOLS

- BALL VALVE
- GATE VALVE
- BUTTERFLY VALVE
- CHECK VALVE
- PLUG VALVE
- 3-WAY VALVE
- ANGLE VALVE
- RELIEF OR SAFETY VALVE
- DIAPHRAGM VALVE
- CHANGEOVER VALVE
- SELF-CONTAINED PRESSURE REGULATING VALVE W/RELIEF
- SELF-OPERATING PRESSURE REGULATOR VALVE
- HANDLE OR THROTTLE W/ PRESSURE RELIEF
- KNIFE GATE VALVE
- AIR VACUUM VALVE
- BP — BACKFLOW PREVENTER
- NO — NORMALLY OPEN
- NC — NORMALLY CLOSED
- SP — SAMPLE PORT
- FLEXIBLE HOSE
- EXPANSION/FLEXIBLE JOINT
- BASKET TYPE STRAINER
- Y-TYPE STRAINER
- DUPLEX STRAINER
- SLEEVE COUPLING
- FLOOR DRAIN
- EQUIPMENT DRAIN
- CLEANOUT (CO)
- REMOVABLE PLUG
- REMOVABLE CAP
- BF — BLIND FLANGE
- EXHAUST TO ATMOSPERE (INSIDE)
- EXHAUST TO ATMOSPERE (OUTSIDE)
- CONCENTRIC REDUCER
- ECCENTRIC REDUCER
- FLANGE
- UNION
- QUICK DISCONNECT COUPLING
- GAUGE SEAL
- DAMPER
- PITLESS ADAPTOR

VALVE OPERATOR SYMBOLS

- S — SOLENOID
- M — MOTOR, ELECTRIC
- DIAPHRAGM
- DIAPHRAGM WITH POSITIONER
- HANDWHEEL OR LEVER
- CHAINWHEEL

PRIMARY ELEMENT SYMBOLS – FLOW

- ORIFICE PLATE
- INSERT FLOW ELEMENT
- AVERAGING PITOT TUBE
- VENTURI OR FLOW TUBE
- TOTALIZING FLOWMETER
- FLUME
- WEIR
- TURBINE OR PROPELLER TYPE METER
- MAGNETIC FLOW METER
- ROTAMETER

EQUIPMENT SYMBOLS

- PUMP
- PNEUMATIC DIAPHRAGM PUMP
- M — METERING PUMP
- ORP SENSOR
- GEAR BOX
- VFD — VARIABLE FREQUENCY DRIVE
- RECIPROCATING AIR COMPRESSOR AND TANK
- FLOW DAMPENER
- BLOWER
- M — MIXER
- AIR FILTER
- PARTICULATE FILTER
- COALESCING FILTER
- AIR FILTER/SILENCER

GENERAL INSTRUMENT SYMBOLS

ONE VARIABLE	TWO VARIABLES	
		LOCALLY MOUNTED
		PANEL MOUNTED
		REAR-OF-PANEL MOUNTED
I		INTERLOCK (FOR LOGIC DESCRIPTION SEE SPEC. 13600)
P		PURGE
PLC		PROGRAMMABLE LOGIC CONTROLLER
LCP		LOCAL CONTROL PANEL
LSL		PERSONAL COMPUTER SOFT SWITCH
		PERSONAL COMPUTER HUMAN MACHINE INTERFACE
		PERSONAL COMPUTER
A		ALARM

LINE SYMBOLS

- PROCESS PIPES OR CHANNELS
- HT — HEAT TRACE
- CONNECTION TO PROCESS, MECHANICAL LINK OR INSTRUMENT SUPPLY
- PNEUMATIC SIGNAL
- ELECTRIC SIGNAL
- CAPILLARY TUBING (FILLED SYSTEM)
- HYDRAULIC SIGNAL
- ELECTROMAGNETIC OR SONIC SIGNAL NO WIRING OR TUBING
- DATA HIGHWAY SIGNAL

INSTRUMENT IDENTIFICATION TABLE

	FIRST LETTER		SUCCEEDING LETTERS		
	MEASURED OR INITIATING VARIABLE	MODIFIER	READOUT OR PASSIVE FUNCTION	OUTPUT FUNCTION	MODIFIER
A	ANALYSIS		ALARM		
B	BURNER FLAME				
C	CONDUCTIVITY			CONTROL	
D	DENSITY (SP. GR.)	DIFFERENTIAL			
E	VOLTAGE		PRIMARY ELEMENT		
F	FLOWRATE	RATIO			
G	GAUGING (DIMENSIONAL)		GLASS		
H	HAND (MANUAL)				HIGH
I	CURRENT		INDICATE		
J	POWER	SCAN			
K	TIME OR SCHEDULE			CONTROL SWITCH	
L	LEVEL		LIGHT (PILOT)		LOW
M	MOISTURE OR HUMIDITY				MIDDLE
N					
O			ORIFICE		
P	PRESSURE OR VACUUM		POINT (TEST)		
Q	QUANTITY OR EVENT	INTEGRATE			
R	RADIOACTIVITY		RECORD OR PRINT		
S	SPEED OR FREQUENCY	SAFETY		SWITCH	
T	TEMPERATURE			TRANSMIT	
U	MULTIVARIABLE		MULTIFUNCTION		
V	VISCOSITY			VALVE OR DAMPER	
W	WEIGHT OR FORCE		WELL		
X	UNCLASSIFIED		UNCLASSIFIED		
Y				RELAY OR COMPUTE	
Z	POSITION			DRIVE ACTUATE	

PROCESS LINE ABBREVIATIONS

AIR	AIR, ATMOSPERIC PRESSURE
BW	BACKWASH
CA	COMPRESSED AIR
CF	CHEMICAL FEED
CGW	CONTAMINATED GROUNDWATER
CR	CONDENSATE RETURN
CWR	COOLING WATER RETURN
CWS	COOLING WATER SUPPLY
D	DRAIN
EFF	EFFLUENT
EXH	EXHAUST
GW	GROUNDWATER
IA	INSTRUMENT AIR
(I)	INSULATION
NPW	NON-POTABLE WATER
P	PRODUCT
PW	POTABLE WATER
S	SANITARY
SL	SLUDGE
SP	SAMPLE PORT
SS	STORM SEWER
TF	TOTAL FLUIDS
V	VENT
VAP	VAPOR
WW	WASTEWATER
WWR	WASTEWATER RECIRCULATION

PIPING MATERIAL ABBREVIATIONS

ABS	ACRYLONITRILE BUTADIENE STYRENE
AL	ALUMINUM
CPVC	CHLORINATED POLYVINYL CHLORIDE
CS	CARBON STEEL
COP	COPPER
CMP	CORRUGATED METAL PIPE
CIP	CAST IRON PIPE
DIP	DUCTILE IRON PIPE
FLEX	FLEXIBLE PIPE/DUCT/TUBING
GS	GALVANIZED STEEL
HDPE	HIGH DENSITY POLYETHYLENE
NEO	NEOPRENE HOSE
PE	POLYETHYLENE
PP	POLYPROPYLENE
PVC	POLYVINYL CHLORIDE
PVDF	POLYVINYLIDENE FLUORIDE
RCP	REINFORCED CONCRETE PIPE
RUB	RUBBER HOSE
SS	STAINLESS STEEL PIPE/TUBING
TEF	TEFLON TUBING
VCP	VITRIFIED CLAY PIPE

PROCESS PIPING IDENTIFICATION

PROCESS PIPE

XXX–YY–Z

- PIPE CONTENTS
- PIPING MATERIAL
- PIPE DIAMETER (INCHES)

INSTRUMENT IDENTIFICATION

INSTR LOOP — FIT–100A

- SUFFIX (NOT NORMALLY USED)
- TAG NUMBER
- SUCCEEDING LETTERS
- FIRST LETTER

FUNCTION ABBREVIATIONS

DO	DISSOLVED OXYGEN	OC	OPEN–CLOSE
FC	FAIL CLOSED	OO	ON–OFF (MAINTAINED)
FL	FAIL LOCKED	ORP	OXIDATION REDUCTION POTENTIAL
FO	FAIL OPEN	OSC	OPEN–STOP–CLOSE (MOMENTARY)
HOA	HAND–OFF–AUTOMATIC	SI	MOTOR SPEED INDICATION
I/I	CURRENT–TO–CURRENT	SS	START–STOP (MOMENTARY)
I/P	CURRENT–TO–PNEUMATIC	↑	HIGH SELECT
LCP	LOCAL CONTROL PANEL	↓	LOW SELECT
LEL	LOWER EXPLOSIVE LIMIT	√	SQUARE ROOT
LR	LOCAL–REMOTE	Σ	ADD OR TOTALIZE
MI	MOTOR RUN INDICATION		

GENERAL NOTES:

1. ALL EQUIPMENT AND PIPING DOWNSTREAM OF PRESSURE RELIEF/SAFETY VALVES DESIGNED FOR PUMP SHUTOFF PRESSURE.
2. ALL CONTROL VALVES FAIL CLOSED, UNLESS OTHERWISE SPECIFIED.

TETRA TECH
www.tetratech.com
1576 Sherman Street, Suite 100
Denver, CO 80203
Phone: (303) 825-5999 Fax: (303) 825-0642

NOT FOR CONSTRUCTION

MARK	DATE	DESCRIPTION	BY
A	09/18/14	DRAFT - REVIEW BY NERT	FJ
B	10/30/14	FINAL CLIENT WORK PLAN REVIEW	FJ

BUREAU OF CORRECTIVE ACTIONS, SPECIAL BRANCH PROJECTS
NEVADA ENVIRONMENTAL RESPONSE TRUST

AP-5 SOLIDS REMOVAL WORK PLAN, NERT SITE
HENDERSON, NEVADA

PIPING AND INSTRUMENTATION DIAGRAM LEGEND AND ABBREVIATIONS

Project No.:	133-20192-14009
Designed By:	RJ
Drawn By:	FGM
Checked By:	EK

P-102

Sheet

Bar Measures 1 inch

Copyright: Tetra Tech

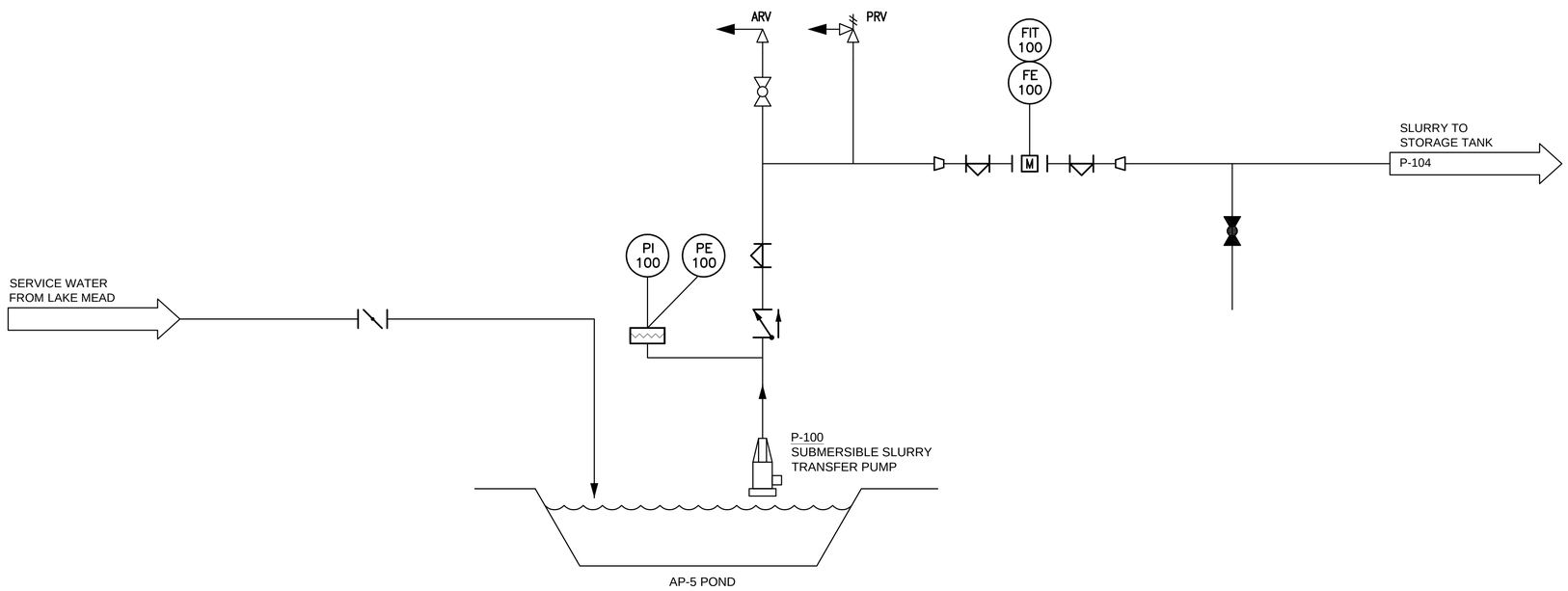

AP-5 POND SLURRY TRANSFER P&ID

TETRA TECH
www.tetratech.com
1576 Sherman Street, Suite 100
Denver, CO 80203
Phone: (303) 825-5999 Fax: (303) 825-0642

NOT FOR CONSTRUCTION

MARK	DATE	DESCRIPTION	BY
A	09/18/14	DRAFT - REVIEW BY NERT	FJ
B	10/30/14	FINAL CLIENT WORK PLAN REVIEW	FJ

BUREAU OF CORRECTIVE ACTIONS, SPECIAL BRANCH PROJECTS
NEVADA ENVIRONMENTAL RESPONSE TRUST

AP-5 SOLIDS REMOVAL WORK PLAN, NERT SITE
HENDERSON, NEVADA

PIPING
AND INSTRUMENTATION
DIAGRAM

Project No.:	133-20192-14009
Designed By:	RJ
Drawn By:	FGM
Checked By:	EK

P-103

Sheet

Big Measures 1 inch

Copyright: Tetra Tech

12/24/2014 9:13:53 AM - P:\20192\133-20192-14009\CAD\SHEETFILES\NERT-AP-5\DRAWINGS-REV B SUBMISSION-10301420192.14009.NERT-P103-B.DWG - GARLAND, DEENA

CAD FILE: 20192.14009.NERT-P103-B.DWG

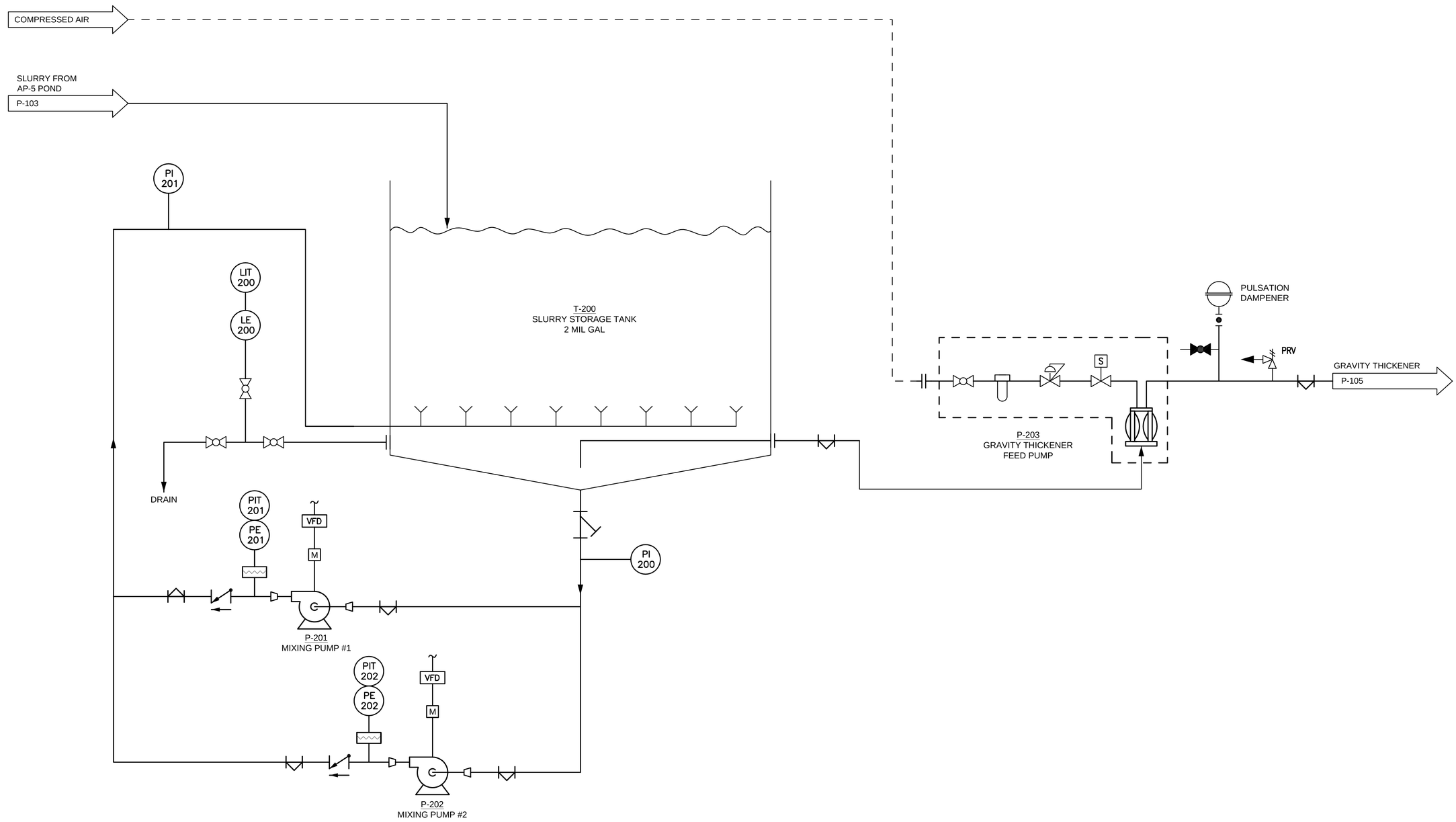

SLURRY STORAGE AND MIXING P&ID

TETRA TECH
www.tetratech.com
1576 Sherman Street, Suite 100
Denver, CO 80203
Phone: (303) 825-5999 Fax: (303) 825-0642

NOT FOR CONSTRUCTION

MARK	DATE	DESCRIPTION	BY
A	09/18/14	DRAFT - REVIEW BY NERT	FJ
B	10/30/14	FINAL CLIENT WORK PLAN REVIEW	FJ

BUREAU OF CORRECTIVE ACTIONS, SPECIAL BRANCH PROJECTS
NEVADA ENVIRONMENTAL RESPONSE TRUST
AP-5 SOLIDS REMOVAL WORK PLAN, NERT SITE
HENDERSON, NEVADA

PIPING
AND INSTRUMENTATION
DIAGRAM

Project No.:	133-20192-14009
Designed By:	RJ
Drawn By:	FGM
Checked By:	EK

P-104
Sheet

Copyright: Tetra Tech

12/24/2014 9:18:02 AM - P:\20192\133-20192-14009\CAD\SHEETFILES\NERT-AP-5\DRAWINGS-REV B SUBMISSION-103014\20192.14009.NERT-P104-B.DWG - GARLAND, DEENA
CAD FILE: 20192.14009.NERT-P104-B.DWG
Bar Measures 1 inch

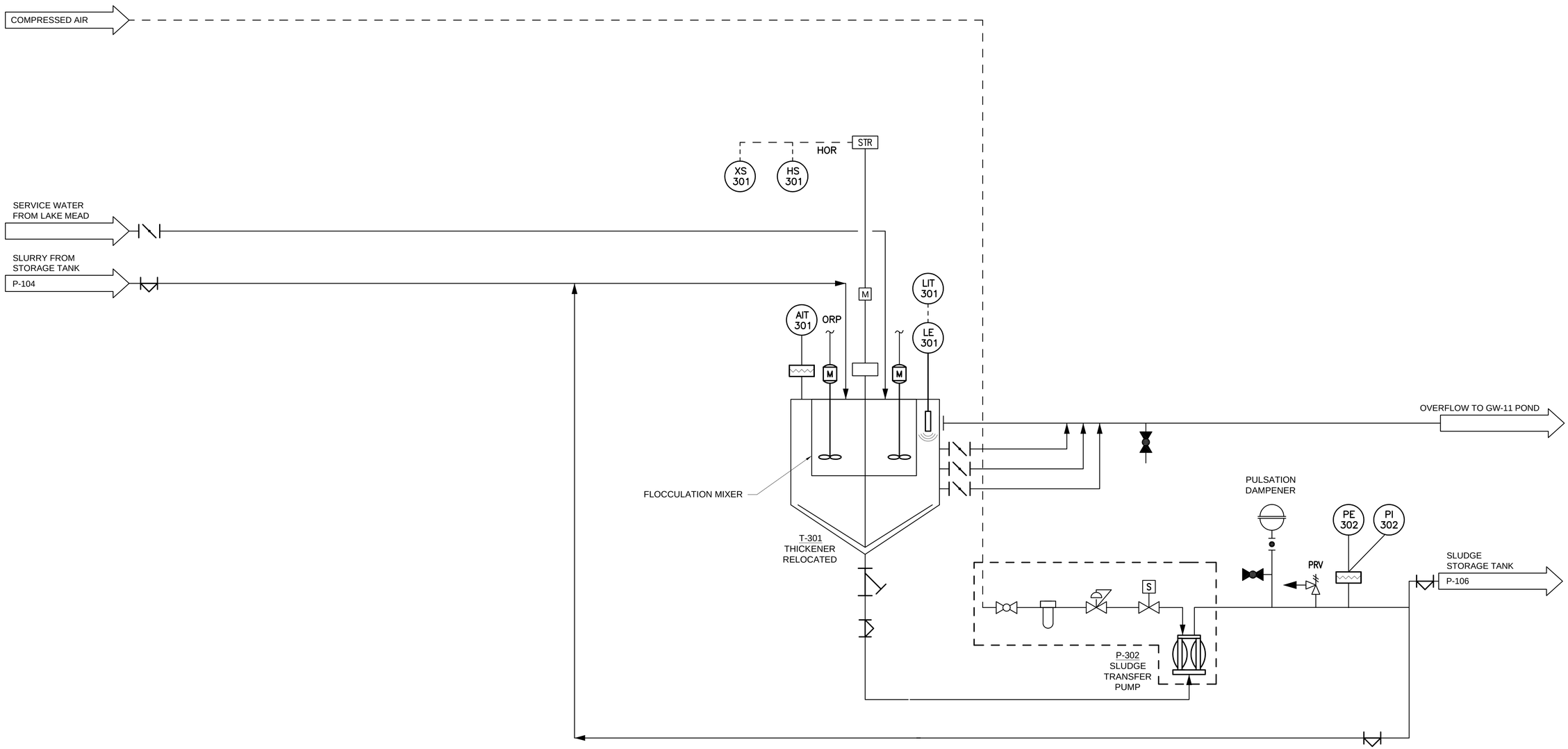

SLURRY WASHING AND THICKENING P&ID

TETRA TECH
www.tetratech.com
1576 Sherman Street, Suite 100
Denver, CO 80203
Phone: (303) 825-5999 Fax: (303) 825-0642

NOT FOR CONSTRUCTION

MARK	DATE	DESCRIPTION	BY
A	09/18/14	DRAFT - REVIEW BY NERT	FJ
B	10/30/14	FINAL CLIENT WORK PLAN REVIEW	FJ

BUREAU OF CORRECTIVE ACTIONS, SPECIAL BRANCH PROJECTS
NEVADA ENVIRONMENTAL RESPONSE TRUST

AP-5 SOLIDS REMOVAL WORK PLAN, NERT SITE
HENDERSON, NEVADA

PIPING
AND INSTRUMENTATION
DIAGRAM

Project No.:	133-20192-14009
Designed By:	RJ
Drawn By:	FGM
Checked By:	EK

P-105

Sheet

Copyright: Tetra Tech

12/24/2014 9:25:28 AM - P:\20192\133-20192-14009\CAD\SHEETFILES\NERT-AP-5\DRAWINGS-REV B SUBMISSION-10301420192.14009.NERT-P105-B.DWG - GARLAND, DEENA

CAD FILE: 20192.14009.NERT-P105-B.DWG

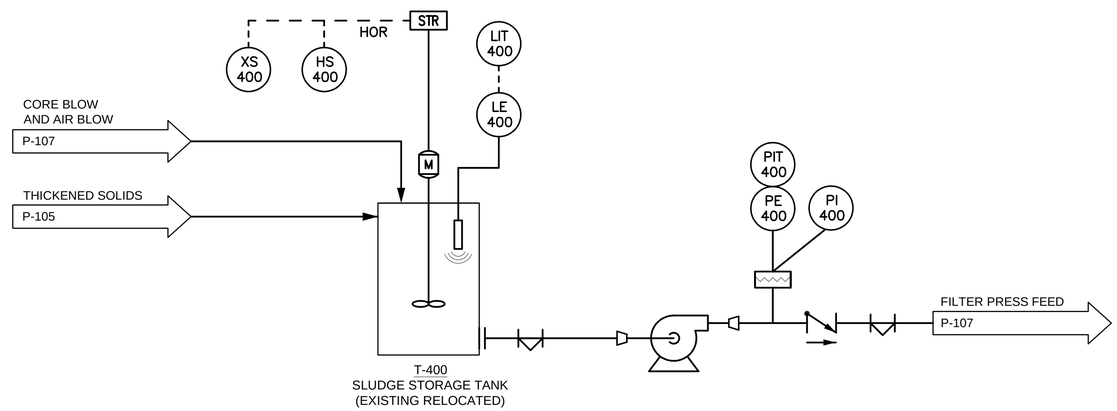

FILTER PRESS FEED P&ID

TETRA TECH
www.tetratech.com
1576 Sherman Street, Suite 100
Denver, CO 80203
Phone: (303) 825-5999 Fax: (303) 825-0642

NOT FOR CONSTRUCTION

MARK	DATE	DESCRIPTION	BY
A	09/18/14	DRAFT - REVIEW BY NERT	FJ
B	10/30/14	FINAL CLIENT WORK PLAN REVIEW	FJ

BUREAU OF CORRECTIVE ACTIONS, SPECIAL BRANCH PROJECTS
NEVADA ENVIRONMENTAL RESPONSE TRUST
AP-5 SOLIDS REMOVAL WORK PLAN, NERT SITE
HENDERSON, NEVADA

PIPING
AND INSTRUMENTATION
DIAGRAM

Project No.:	133-20192-14009
Designed By:	RJ
Drawn By:	FGM
Checked By:	EK

P-106
Sheet

Copyright: Tetra Tech

12/24/2014 9:53:32 AM - P:\20192\133-20192-14009\CAD\SHEETFILES\NERT-AP-5\DRAWINGS-REV B SUBMISSION-103014\20192.14009.NERT-P106-B.DWG - GARLAND, DEENA

CAD FILE: 20192.14009.NERT-P106-B.DWG

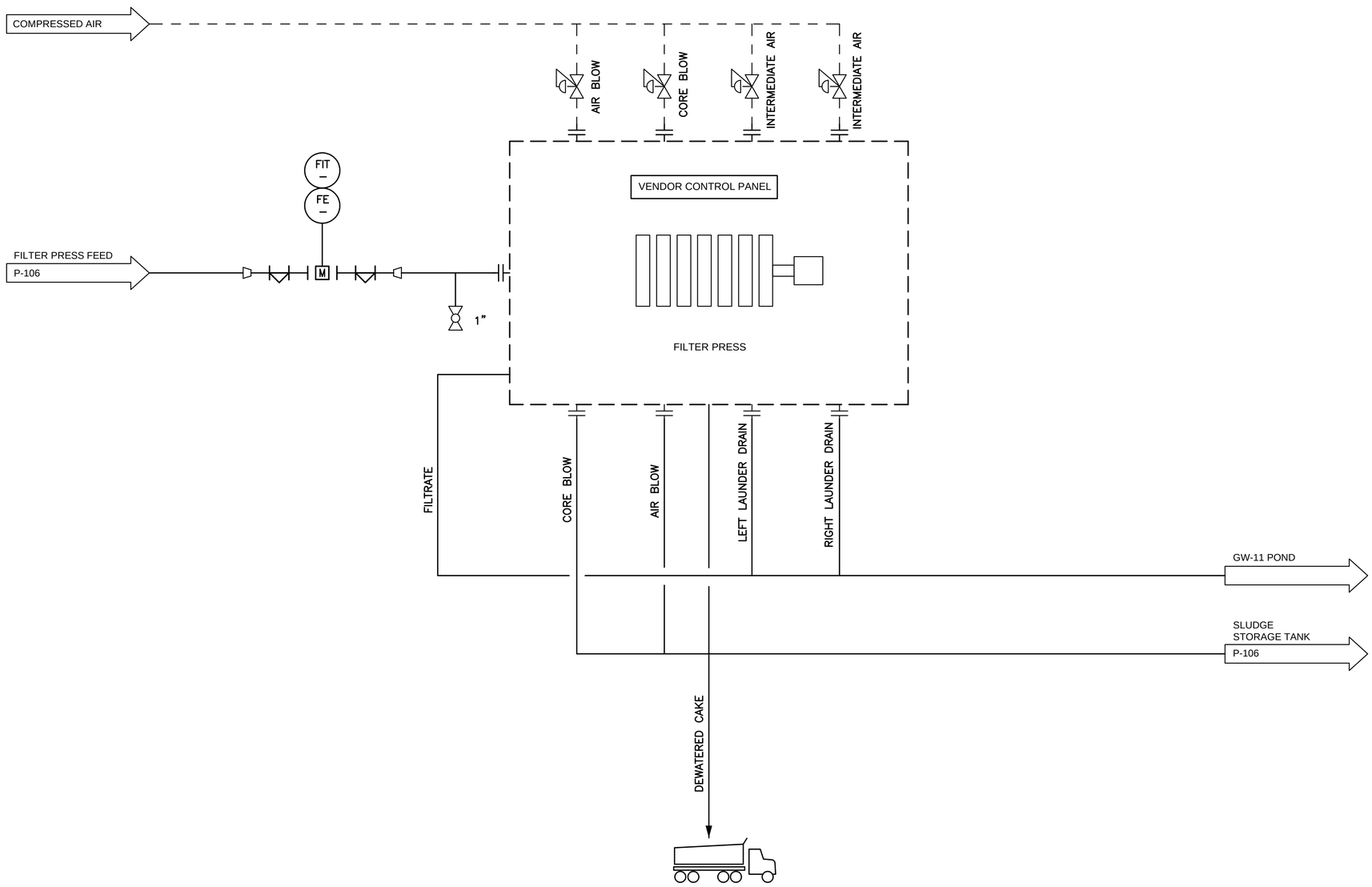

FILTER PRESS P&ID

TETRA TECH
www.tetratech.com
1576 Sherman Street, Suite 100
Denver, CO 80203
Phone: (303) 825-5999 Fax: (303) 825-0642

NOT FOR CONSTRUCTION

MARK	DATE	DESCRIPTION	BY
A	09/18/14	DRAFT - REVIEW BY NERT	FJ
B	10/30/14	FINAL CLIENT WORK PLAN REVIEW	FJ

BUREAU OF CORRECTIVE ACTIONS, SPECIAL BRANCH PROJECTS
NEVADA ENVIRONMENTAL RESPONSE TRUST
AP-5 SOLIDS REMOVAL WORK PLAN, NERT SITE
HENDERSON, NEVADA

PIPING
AND INSTRUMENTATION
DIAGRAM

Project No.:	133-20192-14009
Designed By:	RJ
Drawn By:	FGM
Checked By:	EK

P-107

Sheet

Copyright: Tetra Tech

12/24/2014 9:29:33 AM - P:\20192\133-20192-14009\CAD\SHEETFILES\NERT-AP-5\DRAWINGS-REV B SUBMISSION-103014\20192.14009.NERT-P107-B.DWG - GARLAND, DEENA

CAD FILE: 20192.14009.NERT-P107-B.DWG

APPENDIX B
VENDOR SPECIFICATIONS

PRELIMINARY DESIGN NOT APPROVED FOR CONSTRUCTION

APPROVAL DRAWINGS

☐ APPROVED

☐ NOT APPROVED, REVISE AND RESUBMIT

SIGNATURE DATE

PLEASE MARK AND RETURN TO USA TANK

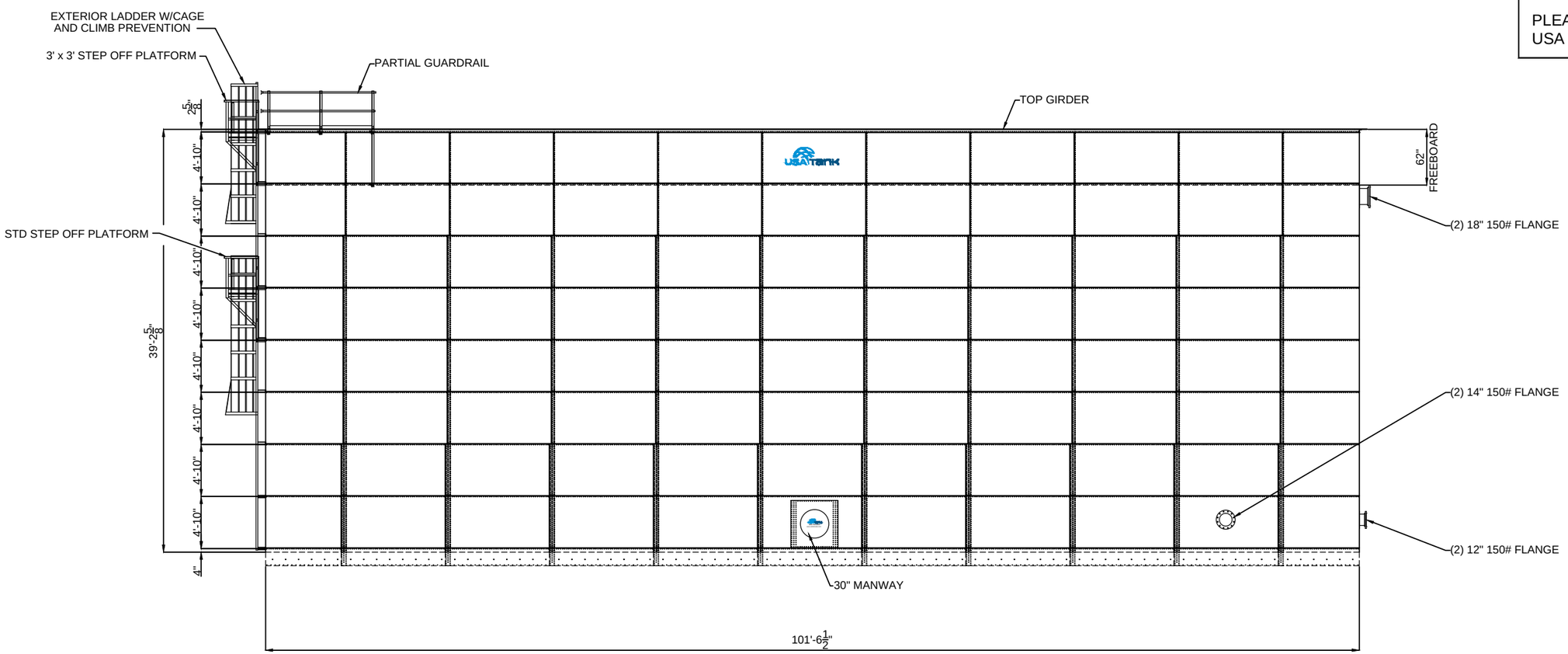

ELEVATION

APPURTENANCES ROTATED FOR CLARITY ONLY

SEE PLAN VIEW FOR CORRECT ORIENTATION

NOTES:

ALL FLANGES TO BE SHOP LOCATED UNLESS OTHERWISE NOTED.

NO:	DATE:	BY:	REVISION:

USA Tank

5897 Hwy. 59, Goodman, MO, 64843
417.845.5588

www.usatanksales.com

This drawing and the information contained herein is submitted confidentially and is the property of USA Tank. It may not be duplicated, disclosed, or utilized without written consent from USA Tank.

UNLESS OTHERWISE SPECIFIED
TOLERANCES:
FRACTIONAL ± 1/16
ONE PLACE DECIMAL ± 0.060
TWO PLACE DECIMAL ± 0.030
THREE PLACE DECIMAL ± 0.010

B

ELEVATION

BOLTED STEEL STORAGE TANK

JOB #:	1409154
COVERAGE:	33 @ 116"
TANK SIZE:	101.54' x 39.22'
INSULATION	NO
WEIGHT	
COLOR	
DO NOT SCALE THIS DRAWING	

LOCATION:	HENDERSON, NV		
CUSTOMER	TETRA TECH		
MODELER:		PM:	
DRAWN BY:	AL	10-07-2014	

PRE-SUBMITTAL -01 -154

REV. 0

PRELIMINARY DESIGN NOT APPROVED FOR CONSTRUCTION

APPROVAL DRAWINGS

☐ APPROVED

☐ NOT APPROVED, REVISE AND RESUBMIT

SIGNATURE DATE

PLEASE MARK AND RETURN TO USA TANK

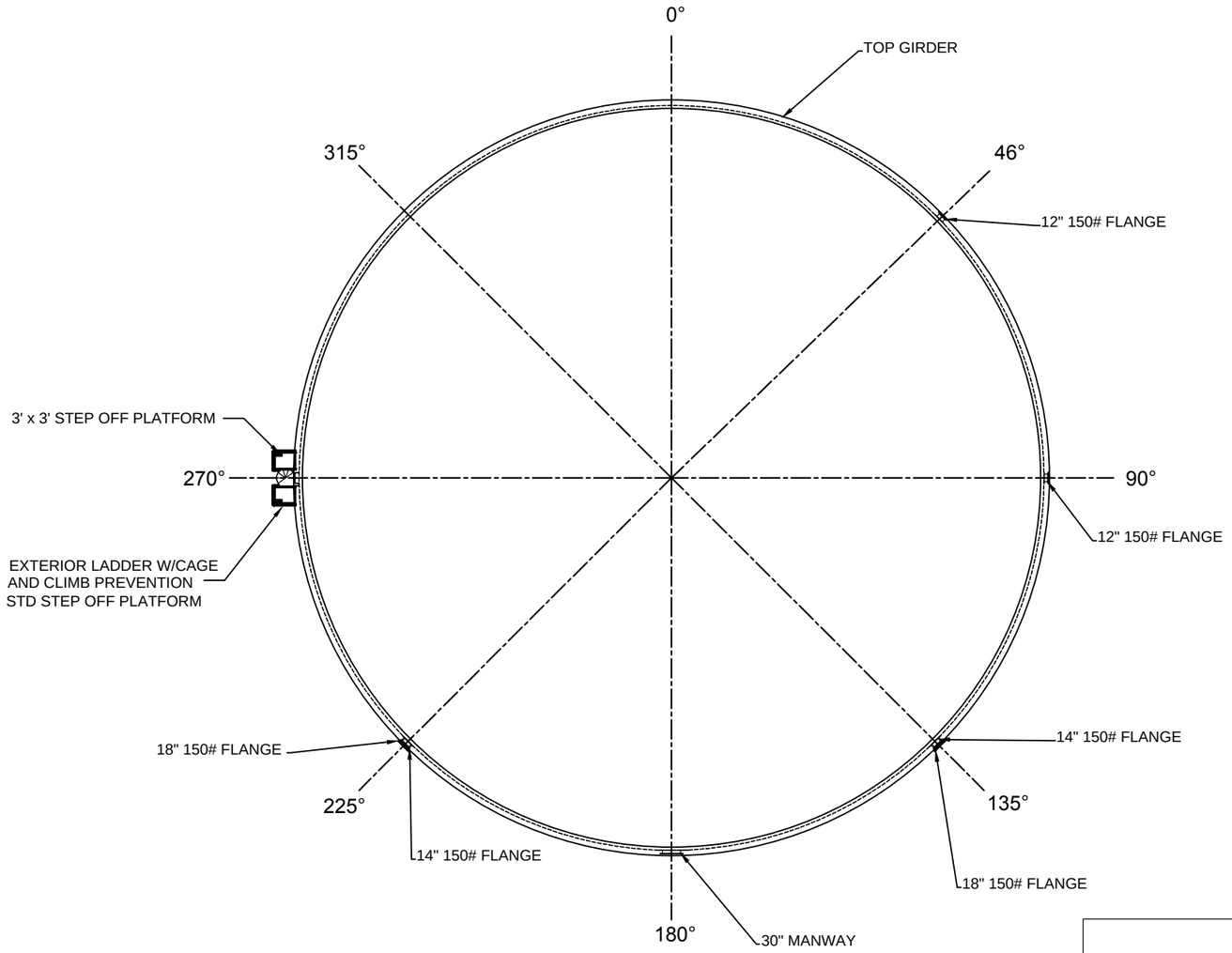

PLAN VIEW

NOTE: THESE LAYOUTS ARE NOT THE ACTUAL FINAL LAYOUTS, THEY ARE JUST A REPRESENTATION. HOWEVER, THE ORIENTATIONS WILL BE FINAL

SIZE	DESCRIPTION	ORIENTATION	ELEVATION
---	EXTERIOR LADDER W/ CAGE, 3' x 3' STEP OFF PLATFORM AND PARTIAL GUARDRAIL	270°	---
12"	150# FLANGE	46°	36"
12"	150# FLANGE	90°	36"
14"	150# FLANGE	135°	36"
14"	150# FLANGE	225°	36"
18"	150# FLANGE	135°	33'-0"
18"	150# FLANGE	225°	33'-0"
30"	MANWAY	180°	31 1/2"

PLEASE VERIFY ORIENTATION AND HEIGHT OF ACCESSORIES OR ADVISE ON HOW TO PROCEED

NO:	DATE:	BY:	REVISION:

USA Tank

5897 Hwy. 59, Goodman, MO, 64843
417.845.5588

www.usatanksales.com

This drawing and the information contained herein is submitted confidentially and is the property of USA Tank. It may not be duplicated, disclosed, or utilized without written consent from USA Tank.

UNLESS OTHERWISE SPECIFIED TOLERANCES:
FRACTIONAL ± 1/16
ONE PLACE DECIMAL ± 0.060
TWO PLACE DECIMAL ± 0.030
THREE PLACE DECIMAL ± 0.010

B

FLAT LAYOUT

BOLTED STEEL STORAGE TANK

JOB #:	1409154
COVERAGE:	33 @ 116"
TANK SIZE:	101.54' x 39.22'
INSULATION	NO
WEIGHT	
COLOR	
DO NOT SCALE THIS DRAWING	

LOCATION:	HENDERSON, NV		
CUSTOMER	TETRA TECH		
MODELER:		PM:	
DRAWN BY:	AL	10-07-2014	

PRE-SUBMITTAL -02 -154

REV. 0

PRELIMINARY DESIGN NOT APPROVED FOR CONSTRUCTION

APPROVAL DRAWINGS

☐ APPROVED

☐ NOT APPROVED, REVISE AND RESUBMIT

SIGNATURE DATE

PLEASE MARK AND RETURN TO USA TANK

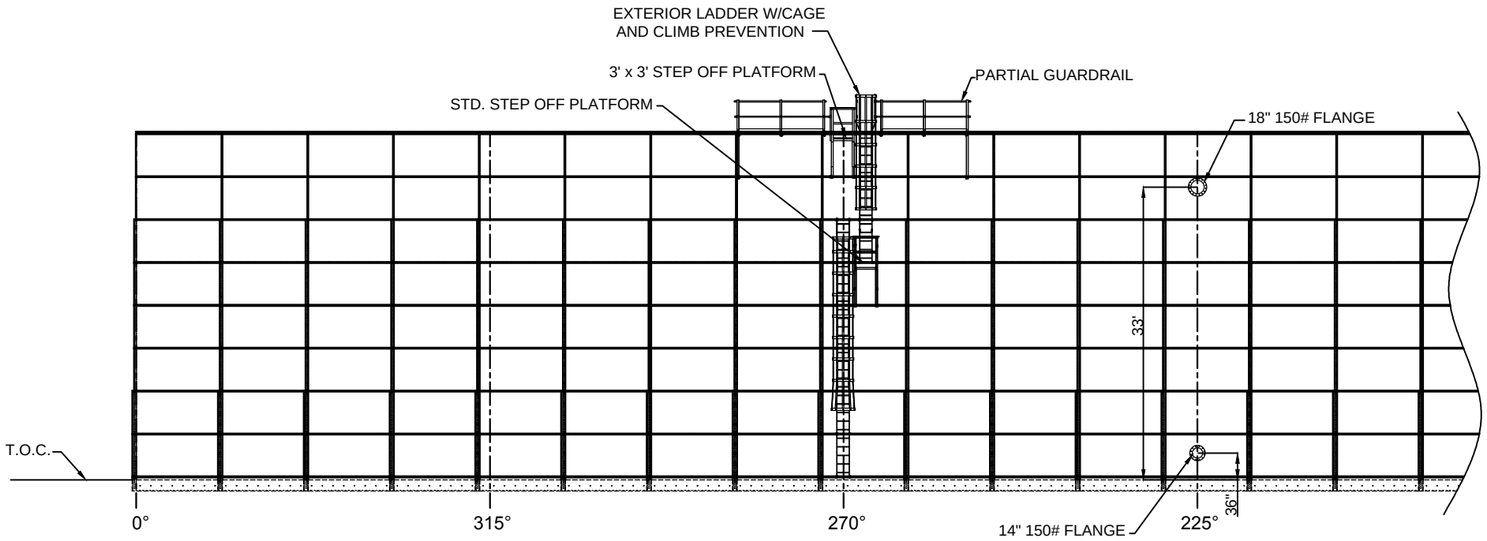

NOTE: ALL DIMENSIONS ARE FROM THE TOP OF THE CONCRETE.

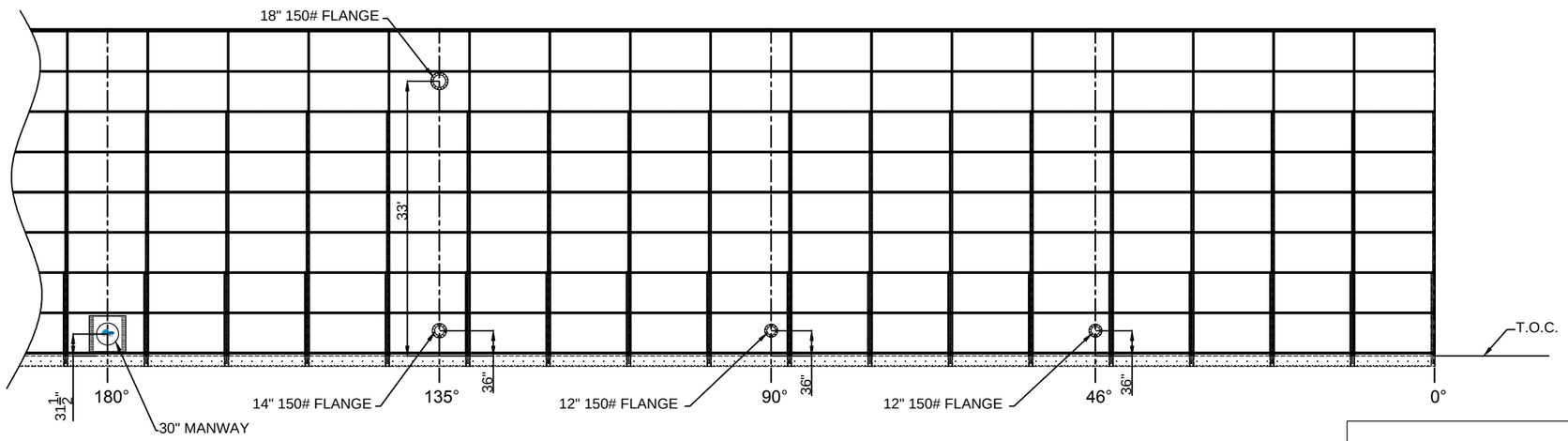

FLAT LAYOUT

PLEASE VERIFY ORIENTATION AND HEIGHT OF ACCESSORIES OR ADVISE ON HOW TO PROCEED

SIZE	DESCRIPTION	ORIENTATION	ELEVATION
---	EXTERIOR LADDER W/ CAGE, 3' x 3' STEP OFF PLATFORM AND PARTIAL GUARDRAIL	270°	---
12"	150# FLANGE	46°	36"
12"	150# FLANGE	90°	36"
14"	150# FLANGE	135°	36"
14"	150# FLANGE	225°	36"
18"	150# FLANGE	135°	33'-0"
18"	150# FLANGE	225°	33'-0"
30"	MANWAY	180°	31 1/2"

NO:	DATE:	BY:	REVISION:

USA Tank

5897 Hwy. 59, Goodman, MO, 64843
417.845.5588

www.usatanksales.com

This drawing and the information contained herein is submitted confidentially and is the property of USA Tank. It may not be duplicated, disclosed, or utilized without written consent from USA Tank.

UNLESS OTHERWISE SPECIFIED
TOLERANCES:
FRACTIONAL ± 1/16
ONE PLACE DECIMAL ± 0.060
TWO PLACE DECIMAL ± 0.030
THREE PLACE DECIMAL ± 0.010

B

FLAT LAYOUT

BOLTED STEEL STORAGE TANK

JOB #:	1409154
COVERAGE:	33 @ 116"
TANK SIZE:	101.54' x 39.22'
INSULATION	NO
WEIGHT	
COLOR	
DO NOT SCALE THIS DRAWING	

LOCATION:	HENDERSON, NV		
CUSTOMER	TETRA TECH		
MODELER:		PM:	
DRAWN BY:	AL	10-07-2014	

PRE-SUBMITTAL -03 -154

REV. 0

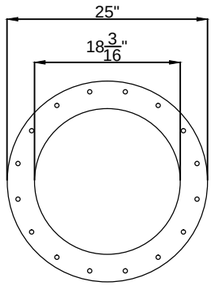

18" PIPE FLANGE
9/16" DIA. BOLT HOLES
ALSO USED AS BACKING FLANGE

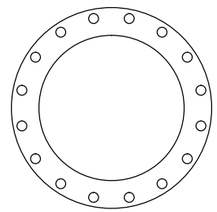

150# FLANGE TO FIT 18" PIPE

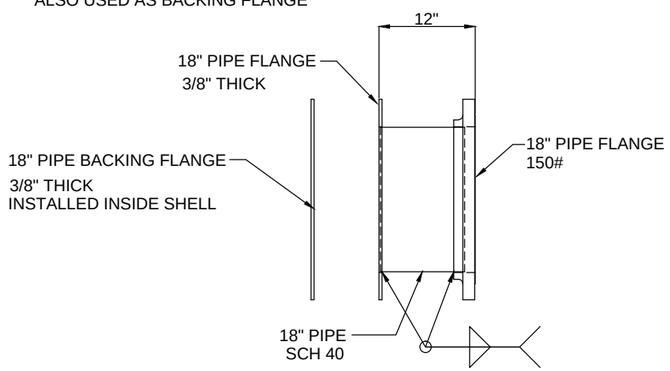

18" FLANGE

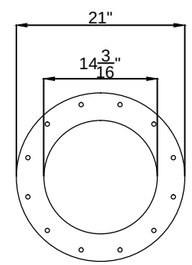

14" PIPE FLANGE
9/16" DIA. BOLT HOLES
ALSO USED AS BACKING FLANGE

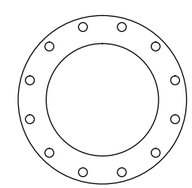

150# FLANGE TO FIT 14" PIPE

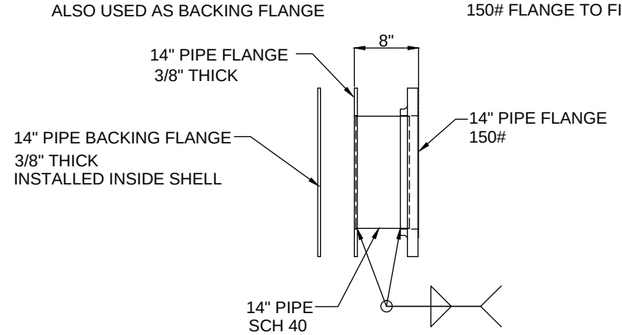

14" FLANGE

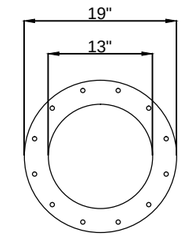

12" PIPE FLANGE
9/16" DIA. BOLT HOLES
ALSO USED AS BACKING FLANGE

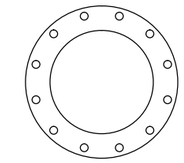

150# FLANGE TO FIT 12" PIPE

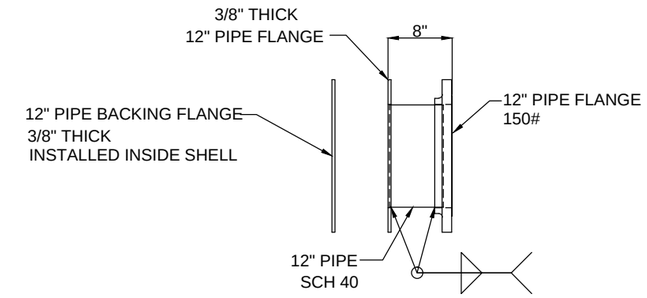

12" FLANGE

NO:	DATE:	BY:	REVISION:

USA Tank

5897 Hwy. 59, Goodman, MO, 64843
417.845.5588

www.usatanksales.com

This drawing and the information contained herein is submitted confidentially and is the property of USA Tank. It may not be duplicated, disclosed, or utilized without written consent from USA Tank.

UNLESS OTHERWISE SPECIFIED
TOLERANCES:
FRACTIONAL ± 1/16
ONE PLACE DECIMAL ± 0.060
TWO PLACE DECIMAL ± 0.030
THREE PLACE DECIMAL ± 0.010

B

STANDARD FLANGES

BOLTED STEEL STORAGE TANK

JOB #:	1409154
COVERAGE:	33 @ 116"
TANK SIZE:	101.54' x 39.22'
INSULATION	NO
WEIGHT	
COLOR	
DO NOT SCALE THIS DRAWING	

LOCATION:	HENDERSON, NV		
CUSTOMER	TETRA TECH		
MODELER:		PM:	
DRAWN BY:	AL	10-07-2014	

PRE-SUBMITTAL -04 -154

REV. 0

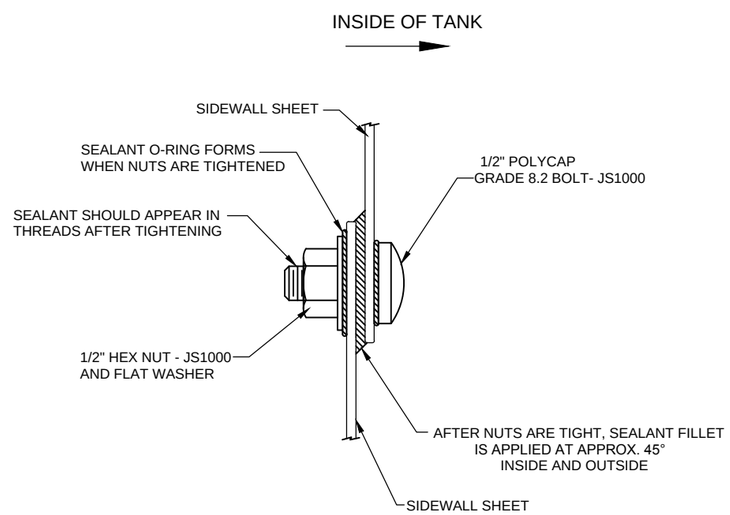

SIDEWALL ASSEMBLED VIEW

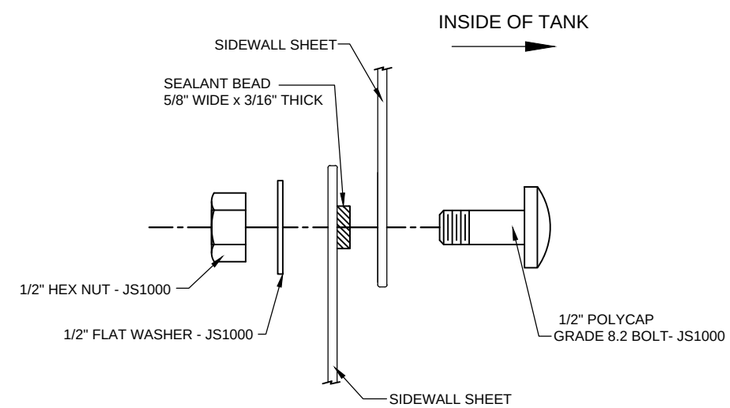

SIDEWALL EXPLODED VIEW

5897 Hwy. 59, Goodman, MO, 64843
417.845.5588
www.usatanksales.com

This drawing and the information contained herein is submitted confidentially and is the property of USA Tank. It may not be duplicated, disclosed, or utilized without written consent from USA Tank.

UNLESS OTHERWISE SPECIFIED
TOLERANCES:
FRACTIONAL ± 1/16
ONE PLACE DECIMAL ± 0.060
TWO PLACE DECIMAL ± 0.030
THREE PLACE DECIMAL ± 0.010

B

BOLTING DETAIL
SEALANT TANKS

NO:	DATE:	BY:	REVISION:	DO NOT SCALE THIS DRAWING		STANDARD DETAIL	REV.
				DRAWN BY: JAB	02/03/14		0

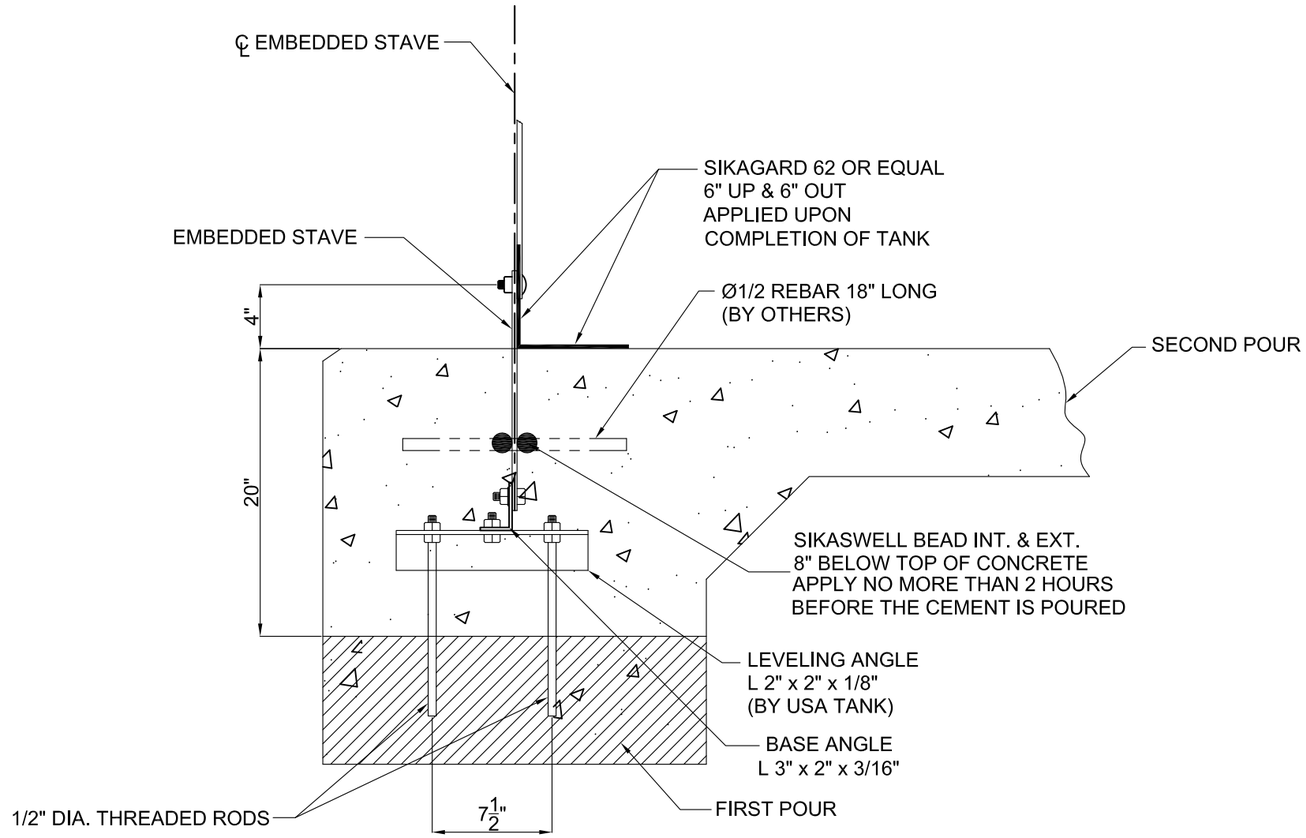

WALL TO EMBEDDED BASE RING CONNECTION

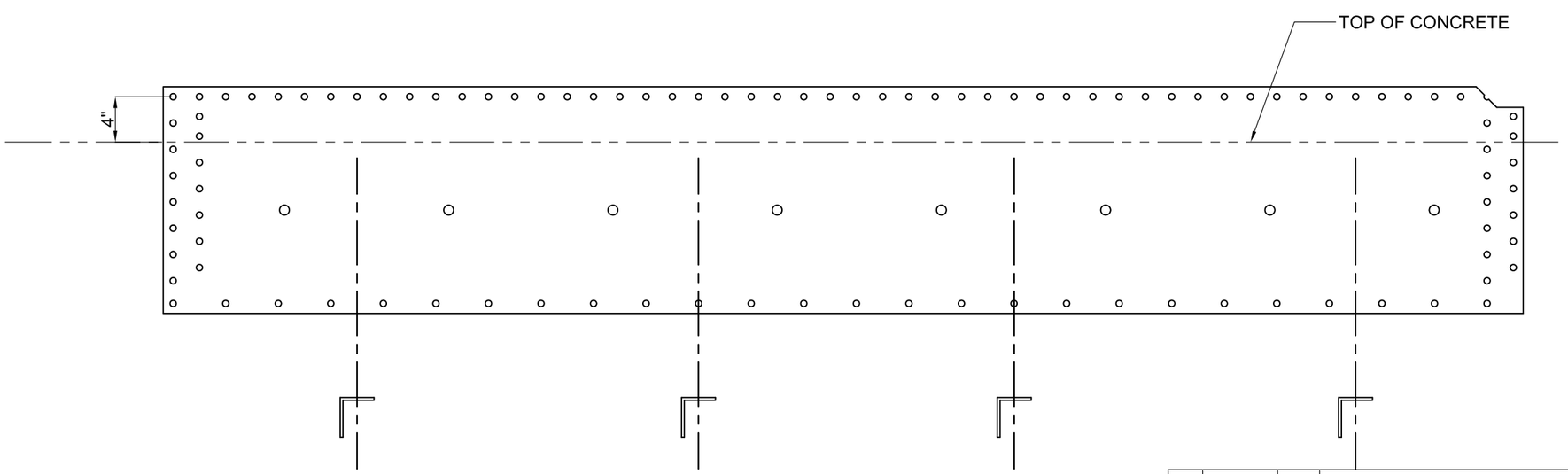

USA Tank

5897 Hwy. 59, Goodman, MO, 64843
417.845.5588

www.usatanksales.com

This drawing and the information contained herein is submitted confidentially and is the property of USA Tank. It may not be duplicated, disclosed, or utilized without written consent from USA Tank.

UNLESS OTHERWISE SPECIFIED
TOLERANCES:
FRACTIONAL ± 1/16
ONE PLACE DECIMAL ± 0.060
TWO PLACE DECIMAL ± 0.030
THREE PLACE DECIMAL ± 0.010

B

EMBEDDED RING

NO:	DATE:	BY:	REVISION:

DO NOT SCALE THIS DRAWING

DRAWN BY: JAB 02/03/14

STANDARD DETAIL

REV. 0

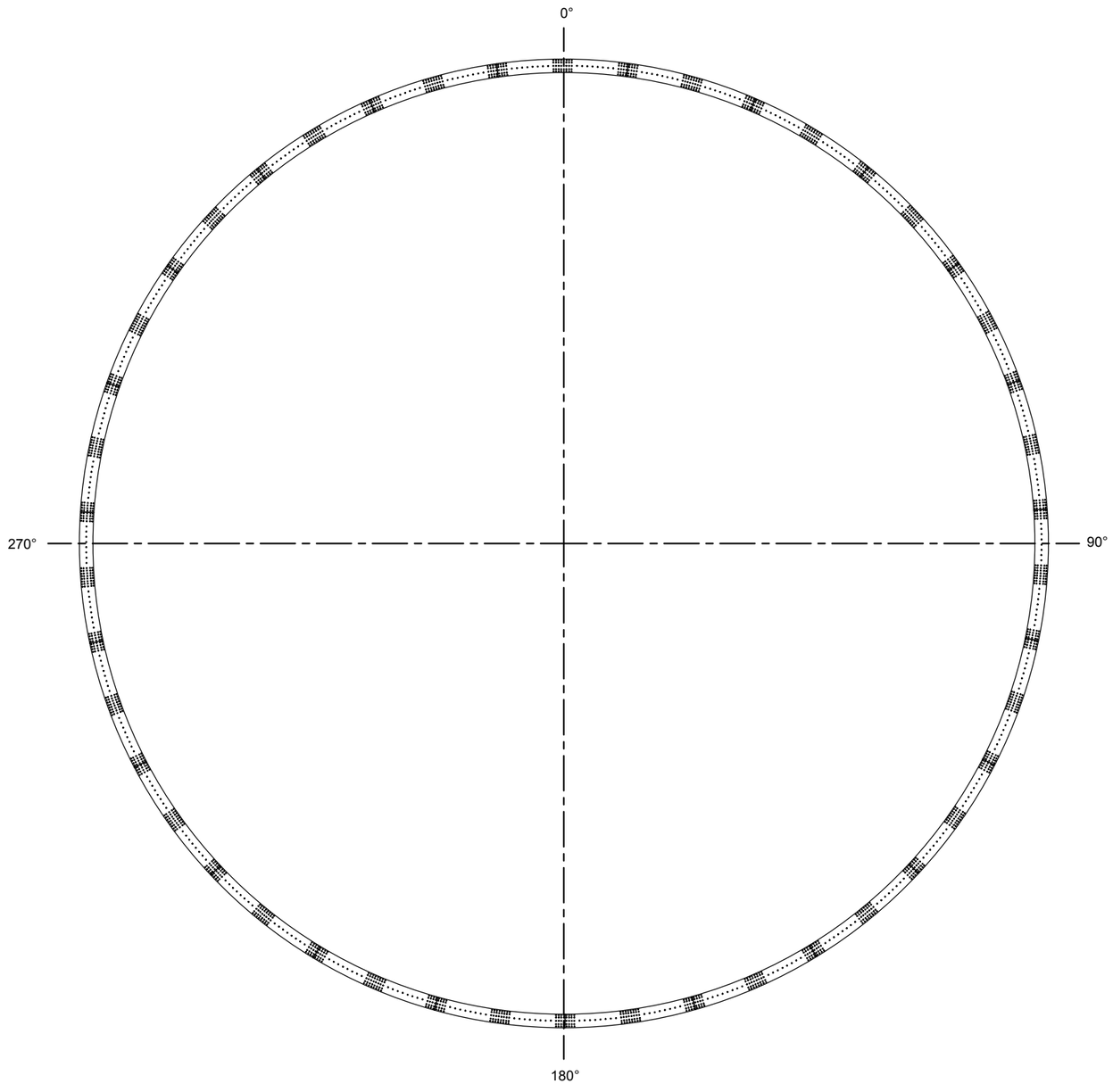

TOP GIRDER LAYOUT

NOTES:
ALL HOLES 9/16"Ø
UNLESS OTHERWISE NOTED

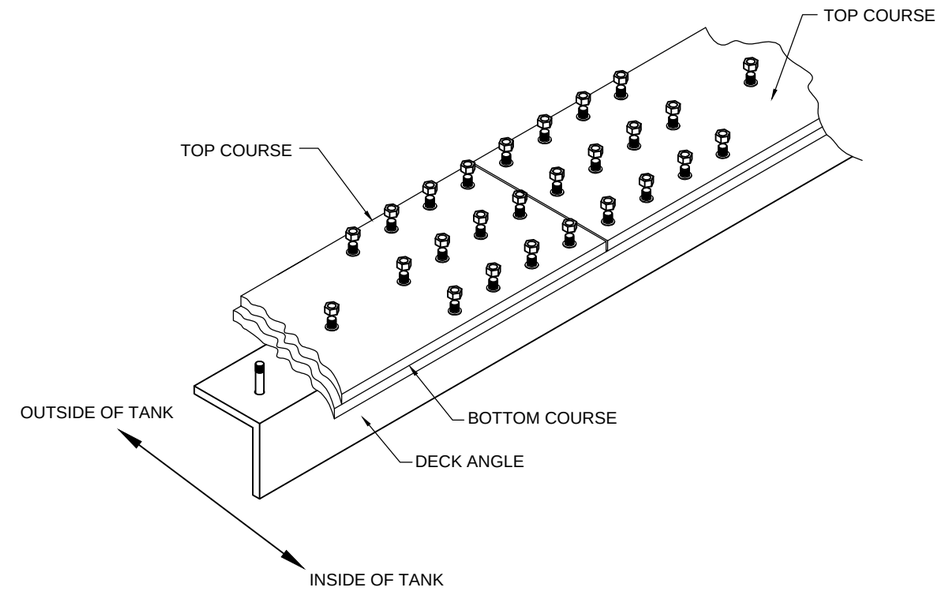

USA Tank
5897 Hwy. 59, Goodman, MO, 64843
417.845.5588
www.usatanksales.com

This drawing and the information contained herein is submitted confidentially and is the property of USA Tank. It may not be duplicated, disclosed, or utilized without written consent from USA Tank.

UNLESS OTHERWISE SPECIFIED
TOLERANCES:
FRACTIONAL ± 1/16
ONE PLACE DECIMAL ± 0.060
TWO PLACE DECIMAL ± 0.030
THREE PLACE DECIMAL ± 0.010

B

TOP GIRDER DETAIL

DO NOT SCALE THIS DRAWING

DRAWN BY: JAB 02/03/14

STANDARD DETAIL

REV. 0

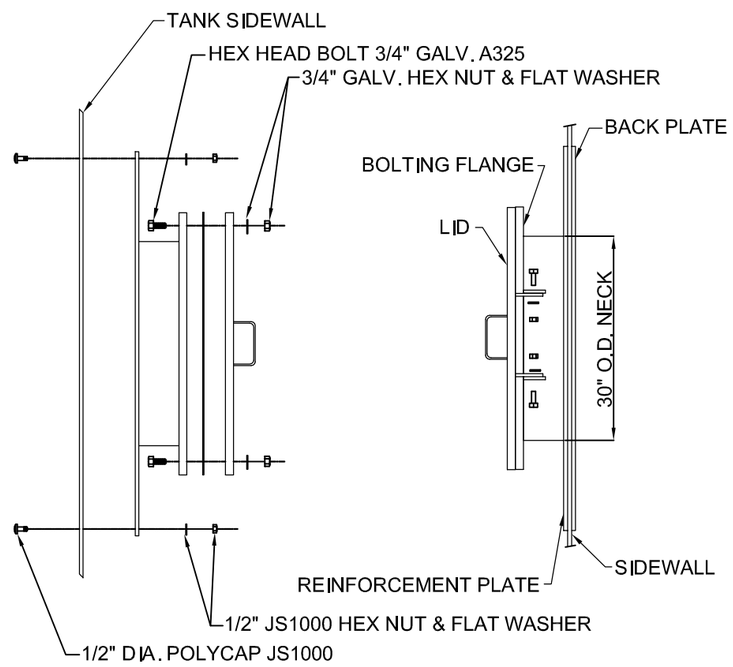

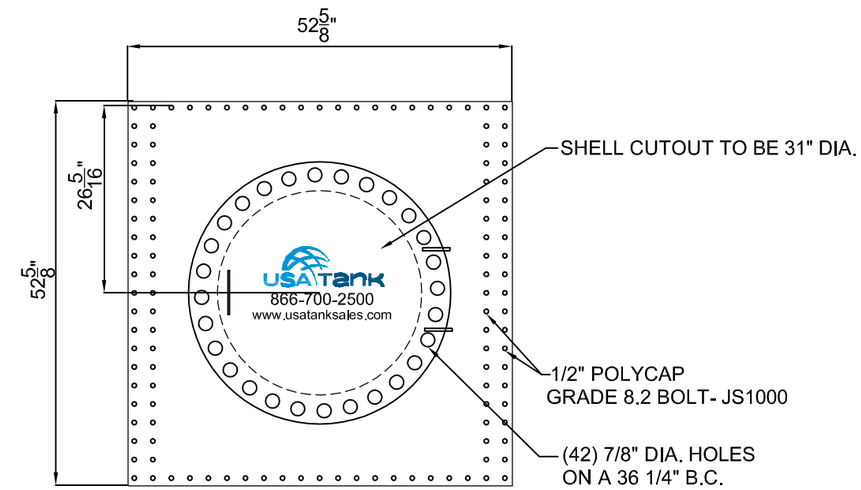

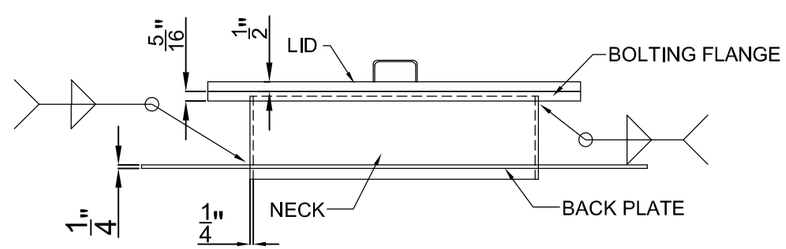

USA Tank
5897 Hwy. 59, Goodman, MO, 64843
417.845.5588
www.usatanksales.com

This drawing and the information contained herein is submitted confidentially and is the property of USA Tank. It may not be duplicated, disclosed, or utilized without written consent from USA Tank.

UNLESS OTHERWISE SPECIFIED
TOLERANCES:
FRACTIONAL ± 1/16
ONE PLACE DECIMAL ± 0.060
TWO PLACE DECIMAL ± 0.030
THREE PLACE DECIMAL ± 0.010

B

30" MANWAY
BOLTED STEEL STORAGE TANK

NO:	DATE:	BY:	REVISION:

DO NOT SCALE THIS DRAWING
DRAWN BY: JAB 02/03/14

STANDARD DETAIL

REV. 0

Tideflex Mixing Technology

The term "Mixing", when related to fluids, can have several different definitions depending upon the requirements of the application. The mixing application can have one or a combination of the following requirements;

1. Blending of one or more fluids together which are partially or completely miscible
2. Maintaining settleable solids within the fluid
3. Promoting cohesion of solids within the fluid
4. Dissipating heat from one fluid into another fluid

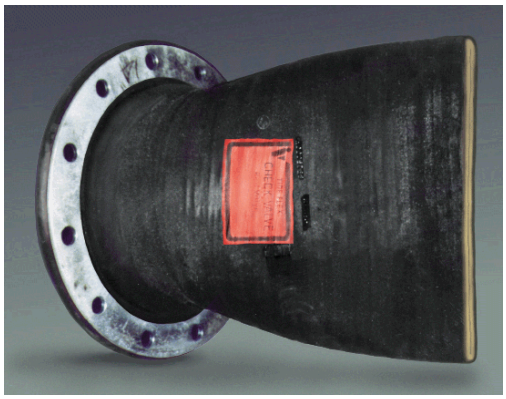

Determining which of these criteria applies to the application is the first step in deciding which mixing method should be applied. There are three main types of mixing methods that the majority of devices can be classified under;

1. Mechanical / Turbine
2. Hydraulic Recirculation / Pumping
3. Diffused Aeration / Pneumatic

The specific application may also have additional process requirements such as oxygen demand, anoxic states, chemical dissipation, etc. which will influence the selection along with the geometry and construction materials of the mixing vessel. When all of these criteria have been evaluated to be able to select the most feasible mixing method (or rule out methods which are not desirable to the process) an economic analysis can be conducted for each manufactured mixing system in terms of operational power cost, maintenance and expected life.

Mixing Design

The design method applied can vary significantly for each of the three mixing methods because many of the formulas utilized are empirical associations which have been generalized and do not allow for adjustment in variances of the fluid properties or constituents contained (i.e. Horsepower per volume of fluid, flowrate per volume of fluid, airflow per volume of fluid). This only allows for comparison of the mixing alternatives in association with "rule of thumb" design values and not the effectiveness of each method to produce the desired level of mixing. This also requires that a different design basis be defined for each of the alternatives making it difficult to have a benchmark for comparison.

The effectiveness of a system to achieve a desired level of mixing can be determined by calculating the work done on the fluid body and the resulting velocity gradient produced. A mixing value requirement can be assigned for each type of process regardless of the type of mixing mechanism applied. The power produced by any specific device can be applied within this equation to satisfy the required mean velocity gradient standard for the specific process.

$$G = \mathrm{SQRT}[\, P / (\mu * V)\,]$$

G = Mean Velocity Gradient, 1/sec
μ = Dynamic Viscosity, lb-sec/sqft
V = Liquid Volume, cuft
P = Power, ft-lbs/sec

Tideflex Technologies

Tideflex Mixing Technology

The standard Mean Squared Velocity Gradient equation can be adjusted for each type of mixing method or technology in association to the power or work produced by the mechanism.

Mechanical / Turbine

For mechanical mixers, the rate of work produced will vary depending on the revolution rate of the mixer, the geometry of the impeller and whether the resulting flow condition is laminar or turbulent. For turbulent conditions, the development of a vortex must be eliminated to apply these formulas.

$$G = SQRT[(k * \mu * n^2 * D^3) / (\mu * V)]$$

$$P = (k * \mu * n^2 * D^3)$$

G = Mean Velocity Gradient, 1/sec
μ = Dynamic Viscosity, lb-sec/sqft
V = Liquid Volume, cuft
P = Power, ft-lbs/sec
k = value specific to Impeller Geometry
n = revolutions per second
D = diameter of Impeller, ft

Hydraulic Recirculation / Pumping

For pumping recirculation systems, the rate of work produced is dependant on the total recirculation rate and the resulting velocity head across the discharge nozzles.

$$G = SQRT[(h_v * \rho * Q) / (\mu * V)]$$

$$P = (h_v * \rho * Q_d) * \#\ Diffusers$$

$$v_d = SQRT[h_v * \rho]$$

G = Mean Velocity Gradient, 1/sec
μ = Dynamic Viscosity, lb-sec/sqft
V = Liquid Volume, cuft
P = Power, ft-lbs/sec
h_v = Velocity Head across each diffuser, ft
ρ = Fluid Density, lbm/cuft
Q_d = Flowrate per Diffuser, cuft/sec
v_d = Diffuser Discharge Velocity, ft/sec

Diffused Aeration / Pneumatic

For diffused aeration systems, the rate of work done is a result of the net weight of the fluid displaced by the volume of the gas within the fluid. The power produced by a diffused aeration system can be substituted into the equation to produce a standard equation for aeration systems in reference to the velocity gradient,

$$G = SQRT[p_a * Q_g * ln[(p_{ah} + h)/ p_{ah}]] / (\mu * V)]$$

$$P = (p_a * Q_g * ln[(p_{ah} + h)/ p_{ah})$$

G = Mean Velocity Gradient, 1/sec
μ = Dynamic Viscosity, lb-sec/sqft
V = Liquid Volume, cuft
P = Power, ft-lbs/sec
p_{ah} = Atmospheric Pressure Head, ft
Q_g = Volumetric Airflow Rate, cuft/sec
h = Submergence Depth of Bubble, ft

Tideflex Mixing Technology

Validation of Design Values

All mixing systems generate directional velocities which produce resulting momentums within the fluid mass. These velocities are associated to a portion of the fluid which is forced at a higher rate through the ambient fluid body producing a discharge plume effect which follows the properties associated to Gaussian plume physics. Mechanical mixers produce a plume from the discharge of the impeller, pump recirculation systems produce a plume from the diffuser discharge, and diffused aeration systems produce a vertical plume from the rising bubble mass. The basic principal of the Gaussian plume is that it will expand dimensionally as it travels through the fluid and also generate a shearing plane where ambient fluid is educted into the discharge plume resulting in blending of the fluids. The mass of the fluid within the plume and it's associated discharge velocity produce momentum which continues through the entire fluid volume resulting in continued mixing.

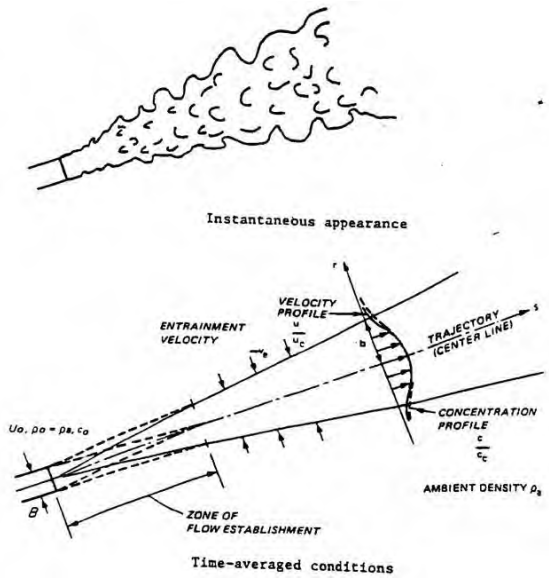

To determine the extent and effectiveness of the plume(s) and momentum on the entire fluid body computer modeling can be applied. The most utilized is Computational Fluid Dynamics (CFD) where the geometry of the fluid body is generated in a three dimensional mesh and a finite analysis is integrated throughout from the initial point of the plume generation and the reactions occurring as the plume extends through the fluid body. CFD modeling is important with fluids and tank geometries that have characteristics where Velocity Gradient design may not address such as suspension of higher density particles (grit and sand), density or temperature differentials (stratifications), and interferences which dampen momentum (square corners, columns, etc.).

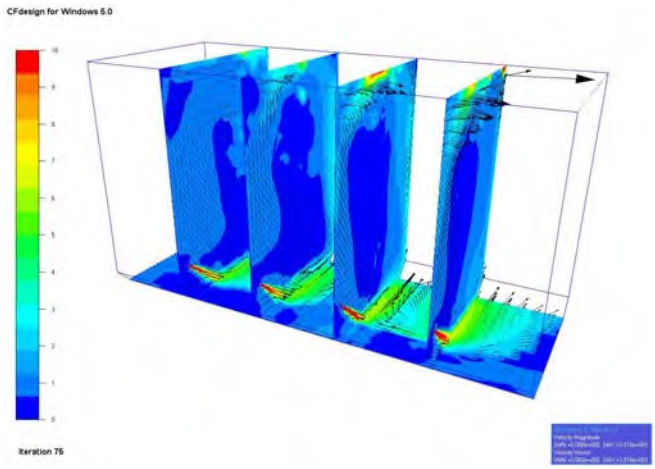

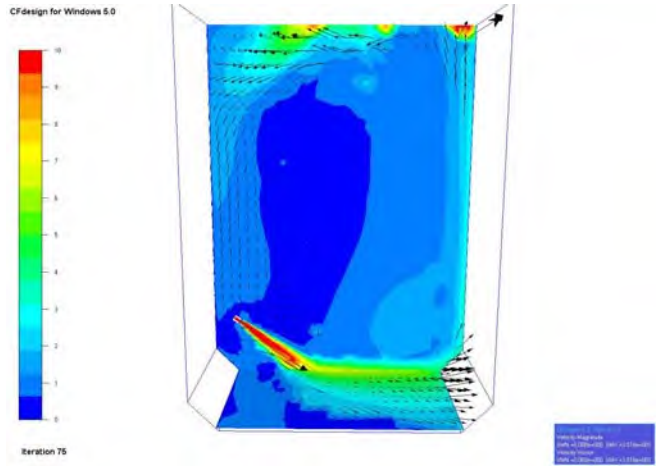

Tideflex Mixing Technology

Design Summary

The Velocity Gradient value provides a benchmark for the required energy (work) to be applied to a specific fluid and process so that various types of mixing methods and systems can be evaluated as well as providing a standard scale for the energy required to produce the rate of mixing desired. Computational Fluid Dynamics modeling provides information relating to equipment orientation, quantity of initial mixing points, specific velocity enhancements required, and a time based projection of the duration required to achieve a complete mix state.

Tideflex Technology provides four different types of systems for mixing potable water, process wastewater (aerobic), process wastewater (anoxic), and wastewater effluent. These systems are designated by the following product / system names:

Tideflex Mixing Systems (TMS)
(Potable Water Reservoirs)

Tideflex Diffused Aeration Systems
(Aerobic Mixing)

Tideflex Effluent Diffuser Systems
(Wastewater Effluent)

Tideflex Hydraulic Recirculation & Mixing Systems
(Anoxic Mixing)

US Patent No. 6,016,839 / 6,193,220 / 6,372,140 / 6,702,263
Canada Patent No. 2,366,252 / 2,385,902; United Kingdom Patent No. 2,326,603

Project: Fluidized Bed Perchlorate Treatment System Location: Henderson, Nevada
Equipment Number(s): T-602, M-611, M-612, M-613 Revision No. 2
Issued by: US Filter E&C Checked by:MFM

1.0 SCOPE

This specification establishes the minimum requirements for the design, fabrication and supply of one thickener with scraper and two flocculation mixers.

2.0 DEFINITIONS

Kerr McGee – hereafter referred to as Buyer, Purchaser or Owner.
US Filter - hereafter referred to as Vendor or Supplier.

3.0 STANDARDS AND CODES

3.1 Mechanical

All mechanical components shall be designed and constructed in accordance with the latest edition and revision of applicable codes and regulations, including the following:

1. National Bureau of Standards (NBS)
2. American Society for Testing Materials (ASTM)
3. American National Standards Institute (ANSI)
4. American Society of Mechanical Engineers (ASME)

3.2 Electrical

All motors and/or electrical equipment shall be designed and constructed in accordance with the latest edition and revision of applicable codes and regulations, including the following:

1. Institute of Electrical and Electronic Engineers (IEEE)
2. National Electrical Manufacturers Association (NEMA)
3. National Electrical Code (NEC)

3.3 Safety

All components shall be designed and constructed in accordance with the latest edition and revision of applicable codes and regulations, including the following:

1. Occupational Safety and Health Administration (OSHA)
2. Nevada Division of Occupational Safety and Health (NDOSH)

3.4 Special Codes

The components of this equipment shall be specifically designed and constructed in accordance with the following:
1. See Section 7.0

4.0 SITE CONDITIONS

4.1 Elevation:	1800 feet above mean sea level
4.2 Ambient Temperature:	15 to 115 degrees F
4.3 Seismic Zone:	2B per the latest revision of the UBC
4.4 Wind Load:	80 MPH Outdoors, 0 MPH Indoors
4.5 Service:	Continuous

5.0 MATERIALS

See Section 7.

6.0 SUBMITTALS

The following information will be submitted to the Owner:
6.1 Design Drawing, Arrangement

7.0 FABRICATION OR PRODUCT

7.1 Operation

The influent enters the thickener through a horizontal influent pipe over the top of the tank supported off the tank bridge. At the center of the thickener, the pipe extends downward to the stilling well where the velocity is reduced and flocculation occurs before discharged out into the thickener. The settling takes place as gravity draws solids to the thickener floor. A sludge collector mechanism, which is centered and supported from the bridge, features two (2) scraper arms. These arms rotate in a circular fashion pushing the sludge to the collector sump located at the tank center where it is discharged from the process.

7.2 Thickener Tank

The circular steel thickener will be 20'-0" in diameter and 18'-0" in wall height having a freeboard of 18". The wall of the tank will be constructed of 1/4 inch minimum thickness, steel plate for erecting on a ½" thick steel bottom plate. All steel plate and structures will conform to ASTM A-36: The thickener will ship in pieces for welding together on site. Thickener grout will be installed on a flat steel bottom plate with internal bottom grout on a 2.75:12 slope.

7.3 Inlet Well

The inlet flocculating well, with scum ports, will be 120" in diameter, 66" in height and will be fabricated with 3/16" thick steel plate. The stilling well will be designed for velocity dissipation of the liquid entering the thickener and to prevent short-circuiting from the center to the weir. The stilling well will be fixed to the bridge and is non-rotating. Below the well is a rotating plate with approximately 1.5" opening around the walls of the well and the bottom plate to allow discharge into the thickener for settling.

7.4 Trough and Weir Plate

An effluent launder will be provided around the inside periphery of the thickener to collect the supernatant. The launder will be designed to carry the expected peak flow without becoming submerged. The effluent trough will be fabricated from 1/4 " thick steel plate with a fiberglass v-notch weir plate. When completed the weir trough will require no caulking or sealant to prevent leakage. The weir plate will be adjustable using hand tools to insure a proper water level in the thickener.

7.5 Scraper Arms

The thickener will include two (2) rotating scraper arms with pickets attached to and supported by a center drive shaft. The scraper arms will be fabricated from structural steel members. Scraper blades with neoprene squeeges will be provided on the rotating arms to move settled sludge to the center collection point and will be spaced on each arm such that settled sludge is collected over the full area of the basin by each arm. The outer scraper blades will be radially adjustable.

7.6 Scraper Drive Mechanism

The drive mechanism will be designed to provide a torque capable of overcoming running friction and the loads induced by moving sludge to the collection sump at a speed to prevent sludge agitation. The drive mechanism will be designed to provide a running torque of 4,000 foot-pounds with a scraper tip speed of approximately 10 feet per minute to allow scraping of sludge to the collection point.

The unit will be equipped with a torque limit cutoff switch, torque indicator, alarm and interlock to shut off the motor on an over torque condition. A 0.50 horsepower, 230/460 volt, 3 phase motor will power the reducer. The motor will be a TEFC, Mill and Chemical duty, 56C frame with class B insulation. The drive unit will be directly coupled to the center collector shaft.

7.7 Bridge

A 36" wide steel bridge will be provided to span the full diameter of the thickener. The bridge will have FRP grating walkway with 1-1/2" diameter steel handrails and steel toeplates. The bridge will be designed to support a uniform live load of 75

pounds per square foot plus the load of the structure with a deflection of no more than 1/360 of the span. There will be a platform, 24" clear each side x 120" long, on the bridge to provide clearance around the drive and flocculation mixers. Access to the bridge will be via a steel stairway with FRP grating, steel handrail, and steel toeplates.

7.8 Flocculation Mixers

Duplex worm gear drive mixers, each with a chuck-type output shaft, a 1" diameter by 60" long (as measured from the mounting surface) rubber coated steel lower shaft equipped with one 30" rubber coated 3-blade, AF3 Axial Flow impeller with stabilizer fins for operation at 68 RPM. Mixer includes a mounting base plate and a 1.0 horsepower, 1750 RPM, 230/460 volt, 60 Hz, TEFC wash down duty motor suitable for operation with a VF Drive provided. Controls mounted in the thickener drive panel.

7.9 Control Panel

The control panel includes a drive mechanism manual starter with integral thermal overload housed in a NEMA 3R enclosure. A red light and audible alarm will be provided to alert the operator of a problem with the drive mechanism. Design, fabrication and installation of all electrical components is in accordance with the current revision of the National Electric Code.

7.10 Surface Preparation and Corrosion Protection (Shop Applied)

Surface preparation and painting shall comply with the requirements of the Kerr McGee Shop Painting specification.

All steel surfaces shall receive a commercial blast in accordance with SSPC-SP6 to remove rust, mill scale, and weld slag. Blasting shall be accomplished indoors using steel shot to produce a mil profile for optimum adhesion of the primer.

All exterior surfaces shall receive a 3.0 mil dry film thickness of Amercoat 385 HB Primer applied in one coat. All interior surfaces and wetted parts shall receive a 8.0 mil dry film thickness of Amercoat 78HB Primer applied in one coat.

Drive and motors provided with original factory coatings.

7.11 Field Coating

Surface preparation and painting shall comply with the requirements of the Kerr McGee Field Painting specification.

Surface preparation for coatings applied over shop painting shall be limited to SSPC-SP2 Hand Tool Cleaning or SSPC-SP3 Power Tool Cleaning.

Final interior coating will be field applied, 8.0 mils dry film thickness of Amercoat 78 HB applied in one coat. Total dry film thickness including shop primer will be 16.0 mils.

Final exterior coating will be field applied, 5.0 mils dry film thickness of Amerlock 400 followed by 5.0 mils dry film thickness of Amershield, each applied in one coat. Total dry film thickness including shop primer will be 13.0 mils. Color shall be sand (Ameron RT-8001) on the tank exterior, stairway, and bridge. Handrail shall be yellow (Ameron YE-3).

8.0 INSPECTION

8.1 Shop Inspection

Seller will perform inspection at manufacturer location.

8.2 Field Inspection

Field inspection to be completed by Seller's representative.

REVISION HISTORY				
REV	DESCRIPTION	BY	APPROVED	DATE
A	INITIAL RELEASE	MJD	-	10/20/2014

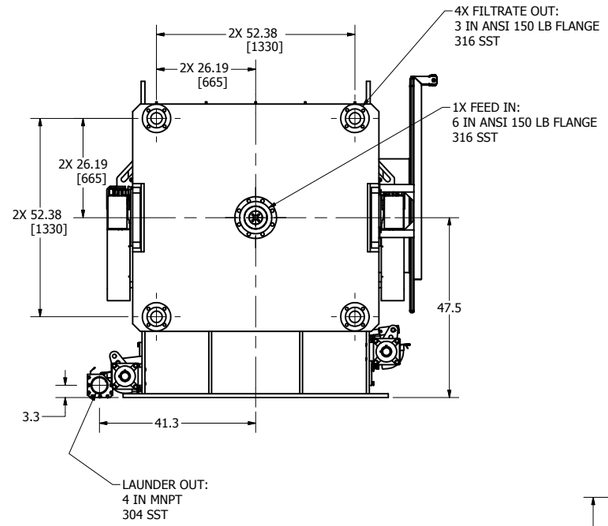

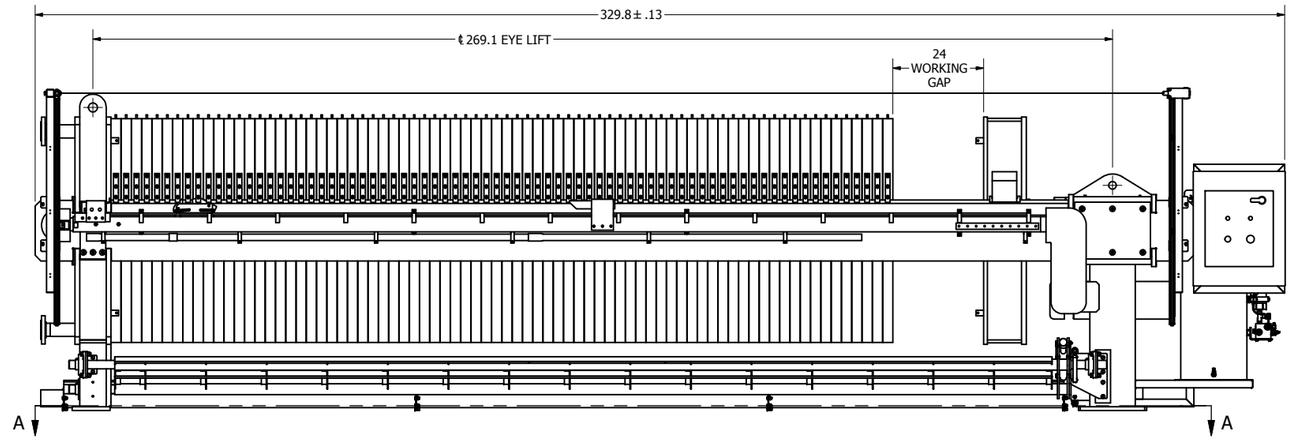

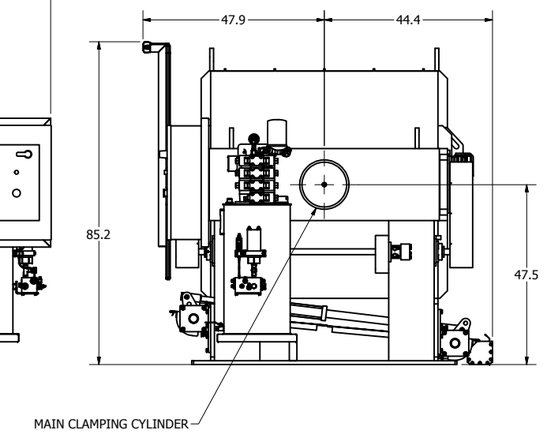

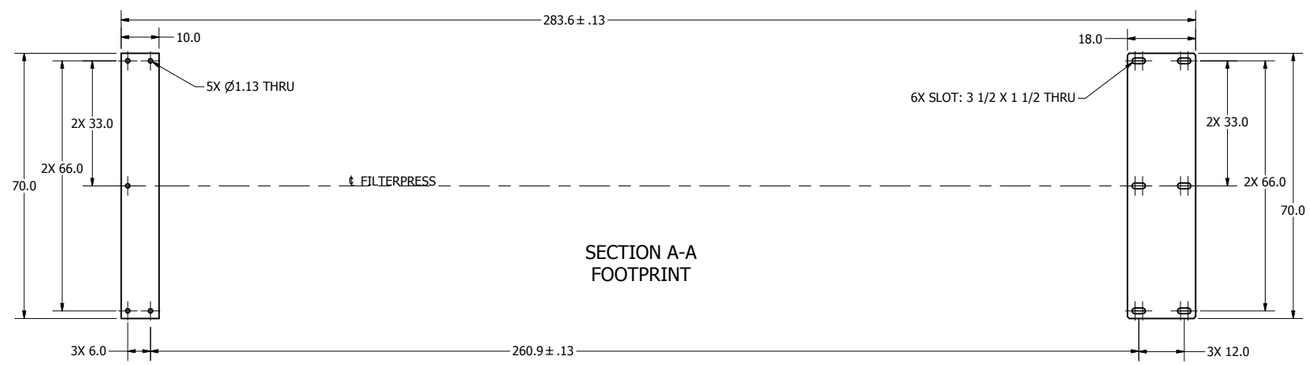

SECTION A-A
FOOTPRINT

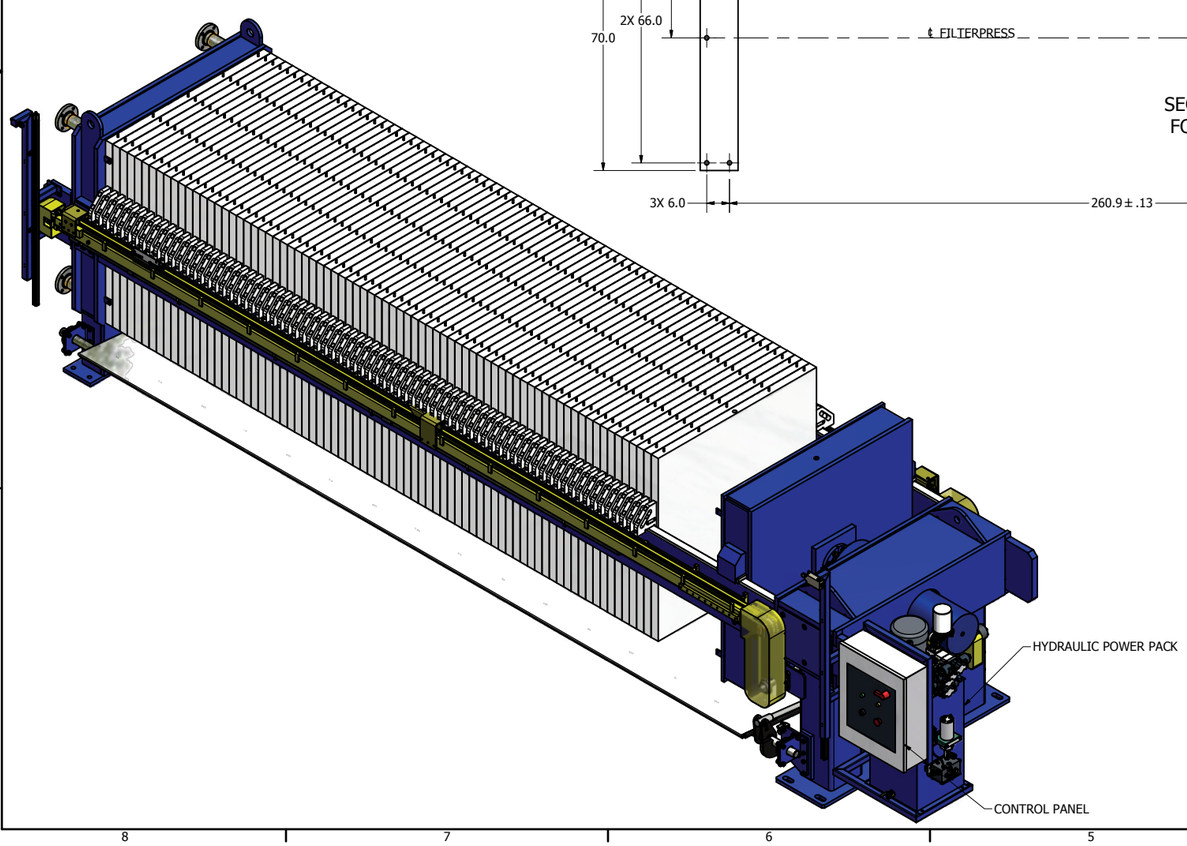

FOR REFERENCE ONLY
NOT FOR MANUFACTURE

NOTES:

1. NUMBER OF CHAMBERS: 75
2. PRESS WEIGHT (UNLADEN): 38,425 Lbs [17,429 Kg]
3. FILTER CAPACITY: 153.03 cu. ft. [4,335 liters]

DO NOT SCALE DRAWING
REMOVE ALL BURRS
AND BREAK SHARP EDGES
ALL DIMENSIONS ARE IN INCHES
DIMENSIONS IN [ ] ARE MILIMETERS

LIMITS UNLESS SPECIFIED:

ANGULAR:	X.XX ± 1/2°
	X.X ± 1°
	X ± 1°
DECIMAL:	.XXX ± .005
	.XX ± .01
	.X ± .03
FRACTIONAL:	±1/64

THIS DOCUMENT OR MATERIAL CONTAINS INFORMATION PROPRIETARY TO MICRONICS IT IS SUBMITTED IN CONFIDENCE AND IS TO BE USED SOLELY FOR THE PURPOSE FOR WHICH IT IS FURNISHED AND RETURNED UPON REQUEST. THIS DOCUMENT AND SUCH INFORMATION IS NOT TO BE REPRODUCED, TRANSMITTED, DISCLOSED OR USED OTHERWISE IN WHOLE OR IN PART WITHOUT THE WRITTEN AUTHORIZATION OF MICRONICS

MATERIAL: ASM
FINISH: POLYURETHANE BLUE
WEIGHT: 38,425 LBS

DRAWN BY	MJD	DATE 10/20/2014
CHECKED BY		DATE
ENG. APPR.		DATE
MFG. APPR.		DATE

MICRONICS
ENGINEERED FILTRATION
200 WEST ROAD, PORTSMOUTH, NH 03801
TEL: 603-433-1299 FAX: 603-433-6673
www.micronicsinc.com

TITLE 1500MM 8 BAR 75 CHAMBER CENTER FEED FILTERPRESS

DWG NO Q26858 GA		REVISION A
DRAWING STATUS Pending	JOB NUMBER Q26858	SIZE D
SCALE 1:20	SHEET 1 OF 1	

LEGENDARY SUBMERSIBLE DP

Heavy duty submersible slurry pump design for the world's toughest applications

TOYO PUMPS

www.toyopumps.com

DP and TO

The Toyo submersible DP series and its hydraulically driven cousin the TO series were specifically designed to pick up and transport abrasive materials with the least amount of water. The DP/TO is a pump and excavator in one. The design incorporates the patented Toyo agitator, attached directly to the pump shaft, which together with the closed impeller, large open passages for the easy passage of solids, heavy duty shaft/bearing configuration and custom built motor with 1.35 service factor, result in the most rugged submersible slurry pump on the market today.

DP Quick facts

- Capacities up to 3200 Usgpm @BEP
- Heads to 130 ft @ BEP
- Pumps up to 70% solids
- Handles solids up to 4.72" in diameter
- Sizes up to 10" in diameter
- Patented high chrome agitator as standard – attached directly to the pump's shaft
- Front (adjustable) and Back high chrome wear plates
- Unique 1.35 S.F. motor
- Heavy duty motor housing
- Low RPM for reduced wear
- Additional bearing support between primary and secondary seal elements

The Toyo patented agitator eliminates solids accumulating on the sump floor and can significantly reduce maintenance costs resulting from digging out sumps and downtime due to solids building up and choking off the suction of conventional pumps. It is because of the Toyo Agitator's patented blade that the highest efficiency in material mixing can be achieved.

Available adders

- Hydraulic drive available (TO)
- Optional jet ring attachment to dislodge tough solids
- High temperature package
- Mechanical seals
- Further designs up to 600HP (non standard)

In applications where solids are especially difficult to pump, or simply where more agitation is required, Toyo offers a special high pressure jet ring. This combination of jet ring and agitator have proven to be a truly effective 'agitation team'.

TOYO PUMPS

www.toyopumps.com

TOYO DP Series

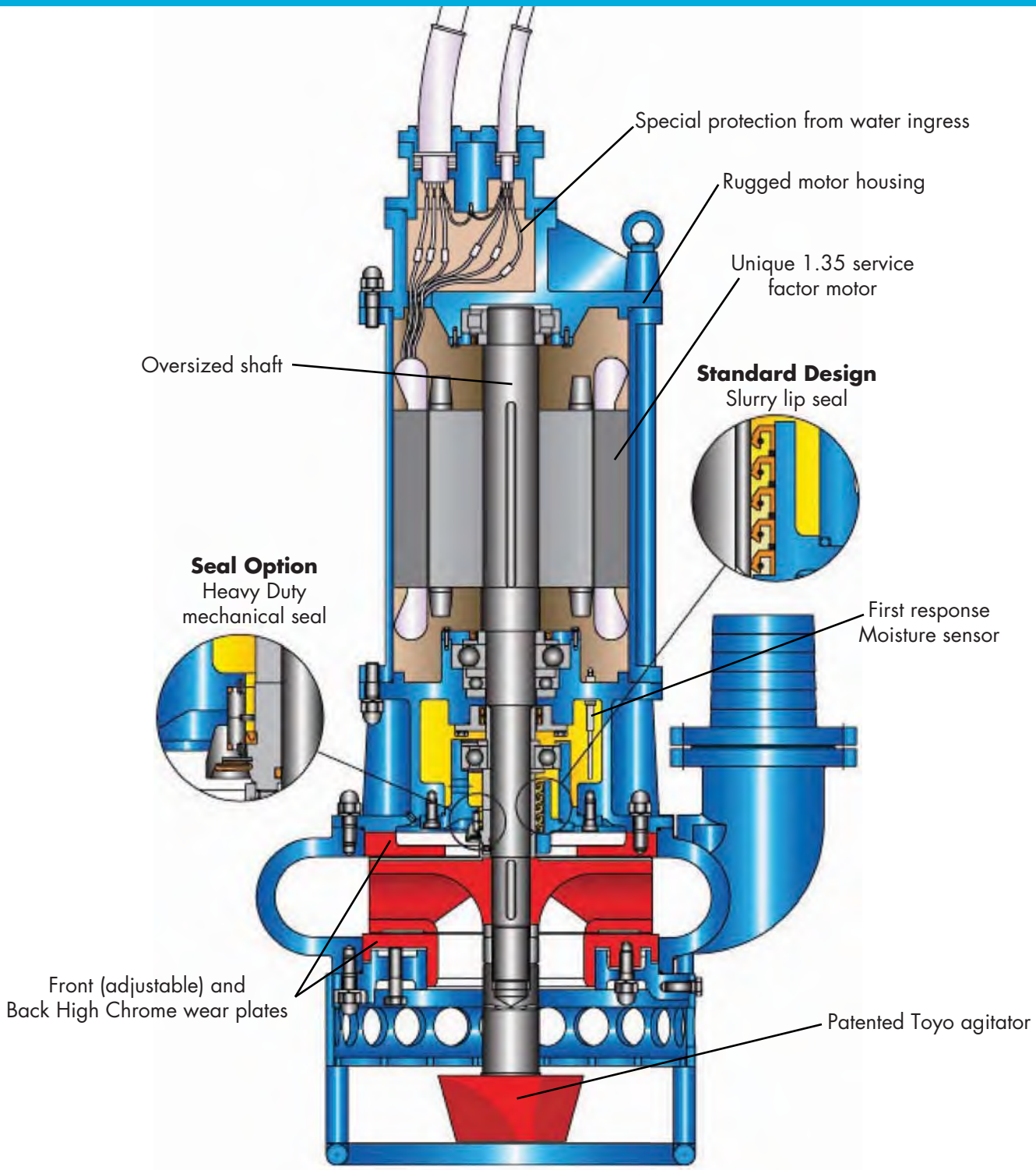

TOYO PUMPS

www.toyopumps.com

The Legendary Toyo DP has been working in the world's toughest and most abrasive applications for 6 decades.

Visit www.toyopumps.com to see full pictorial case studies and download videos showing this heavy duty pump at work.

You'll find the Toyo DP pumps working in the applications below as well as many others:

- Dredging
- Ocean Sand mining
- Tailings ponds
- Fly ash/ bottom ash
- Sand and Gravel excavation
- Hazardous waste clean-up
- Tank clean up (replacing vacuum trucks)
- Cleaning out numerous sumps including at:
- Cement plants
- Agricultural wash down pits (carrots, beats etc)
- Pipeline burial
- Coke pits
- Mill scale/ slag pits
- Barge unloading
- Silt removal
- Removal of filer media at waste treatment plants
- Island building

TOYO PUMPS

www.toyopumps.com

The DP's heavy duty construction makes it the toughest submersible slurry pump on the market today.

TOYO PUMPS

www.toyopumps.com

Legendary DP Specifications

MODEL NUMBER	DP-3-2	DP-5-2	DP-7.5-2	DP-7.5B-2	DP-10-2	DP-10H-2	DPF-15	DPF-15B	DPF-20	DPF-20B
Discharge diameter - inch (mm)	3 (80)	3 (80)	3 (80)	4 (100)	4 (100)	4 (100)	4 (100)	6 (150)	4 (100)	6 (150)
Flow at rated point - Usgpm (m3/min)	132 (0.5)	132 (0.5)	132 (0.5)	264 (1.0)	264 (1.0)	198 (0.75)	400 (1.5)	880 (3.33)	400 (1.5)	880 (3.33)
Head at rated point - ft (m)	23 (7.0)	39 (11.9)	49 (14.9)	39 (11.9)	49 (11.9)	66 (20.1)	49 (11.9)	24 (7.3)	65 (19.8)	33 (10.0)
Impeller diameter - inch (mm)	7.28 (185)	8.23(209)	9.13 (232)	9.13 (232)	9.53 (242)	10.5 (266)	12.6 (320)	11.5 (290)	13.9 (353)	11.8 (300)
Impeller - number of vanes	3	3	3	3	4	6	3	3	2	3
Max. solid size - inch (mm)	0.8 (20)	0.8 (20)	1.0 (25)	1.0 (25)	1.0 (25)	0.55 (14)	1.4 (35)	2.4 (60)	1.4 (35)	2.4 (60)
Weight without cable - lb (kg)	320 (145)	342 (155)	430 (195)	430 (195)	430 (195)	495 (225)	1036 (470)	1124 (510)	1212(550)	1190(540)
Standard motor hp	3	5	7.5	7.5	10	10	15	15	20	20
Optional motor hp	5	N/A	10	10	N/A	N/A	20	20	30	30
Standard seal	Dbl. Mec. Sl	Dbl. Mec. Sl	Dbl. Mec. Sl	Dbl. Mec. Sl.	Dbl. Mec. Sl	Dbl. Mec. Sl.	Toyo lip	Toyo lip	Toyo lip	Toyo lip
Oil capacity - slurry lip seal - USgal	N/A	N/A	N/A	N/A	N/A	N/A	1.1 (4.1)	1.1 (4.1)	1.1 (4.1)	1.1 (4.1)
Oil capacity - mechanical seal - Usgal	.58 (2.2)	.58 (2.2)	.69 (2.6)	.69 (2.6)	.69 (2.6)	.69 (2.6)	0.87 (3.3)	0.87 (3.3)	0.87 (3.3)	0.87 (3.3)
Number of bearings	3	3	3	3	3	3	4	4	4	4
Speed (rpm)	1740	1740	1750	1750	1750	1750	1170	1170	1160	1160
Voltage	220/460/575	220/460/575	220/460/575	220/460/575	220/460/575	220/460/575	220/460/575	220/460/575	220/460/575	220/460/575
F.L. current	8.5 / 4.2 / 3.4	13 / 6.6 / 5.3	20 / 10.1 / 8.0	20 / 10.1 / 8.0	26 / 13 / 10.3	26 / 13 / 10.3	40/20/16	40/20/16	54/27/21	54/27/21
Breaker settings	11.5/5.7/4.6	17.5/8.9/7.2	27/13.6 /10.8	27/13.6/10.8	35/17.5/13.9	35/17.5 /13.9	54/27/21.6	54/27/21.6	73/36/28	73/36/28
Motor protector - Klixon (Thermostat in windings from DPF-15)	Standard	Standard	Standard	Standard	Standard	Standard	Standard	Standard	Standard	Standard
Moisture sensor + relay	Optional	Optional	Optional	Optional	Optional	Optional	Standard	Standard	Standard	Standard
Starting method	D.O.L.	D.O.L.	D.O.L.	D.O.L.	D.O.L.	D.O.L.	D.O.L.	D.O.L.	D.O.L.	D.O.L.
Motor service factor	1.35	1.35	1.35	1.35	1.35	1.35	1.35	1.35	1.35	1.35
Sensor cable (replacement type)	sow 4 - 10	sow 4 - 10	sow 4 - 10	sow 4 - 10	sow 4 - 10	sow 4 - 10	sow 4 - 10	sow 4 - 10	sow 4 - 10	sow 4 - 10
Power cable (replacement type)	sow 4 - 10	sow 4 - 10	sow 4 - 8	sow 4 - 8	sow 4 - 8	sow 4 - 8	ggc 3c - 8	ggc 3c - 8	ggc 3c - 8	ggc 3c - 8
Electric cable length - ft (m)	65 (20)	65 (20)	65 (20)	65 (20)	65 (20)	65 (20)	65 (20)	65 (20)	65 (20)	65 (20)
Insulation Class	F	F	F	F	F	F	F	F	F	F
Max. pumpage temp. STD INS.	115YF	115YF	115YF	115YF	115YF	115YF	115YF	115YF	115YF	115YF
Max. pumpage temp. OPT INS.	175YF	175YF	175YF	175YF	175YF	175YF	175YF	175YF	175YF	175YF
Max. run time motor in air	15 min	15 min	15 min	15 min	15 min	15 min	15 min	15 min	15 min	15 min
Water jacket	Optional	Optional	Optional	Optional	Optional	Optional	Optional	Optional	Optional	Optional
Water jacket flow rate	1-3 gpm	1-3 gpm	1-3 gpm	1-3 gpm	1-3 gpm	1-3 gpm	3-5 gpm	3-5 gpm	3-5 gpm	3-5 gpm
Shaft	Alloy Steel	Alloy Steel	Alloy Steel	Alloy Steel	Alloy Steel	Alloy Steel	Alloy Steel	Alloy Steel	Alloy Steel	Alloy Steel
Pump casing STD	Ductile Iron	Ductile Iron	Ductile Iron	Ductile Iron	Ductile Iron	Ductile Iron	Ductile Iron	Ductile Iron	Ductile Iron	Ductile Iron
Pump casing OPT	28% Chr	28% Chr	28% Chr	28% Chr	28% Chr	28% Chr	28% Chr	28% Chr	28% Chr	28% Chr
Impeller	28% Chr	28% Chr	28% Chr	28% Chr	28% Chr	28% Chr	28% Chr	28% Chr	28% Chr	28% Chr
Wear plate - top	Ductile Iron	Ductile Iron	Ductile Iron	Ductile Iron	Ductile Iron	Ductile Iron	28% Chr	28% Chr	28% Chr	28% Chr
Wear plate - bottom	N/A	N/A	N/A	N/A	N/A	N/A	28% Chr	28% Chr	28% Chr	28% Chr
Suction cover	28% Chr	28% Chr	28% Chr	28% Chr	28% Chr	28% Chr	Cast Iron	Cast Iron	Cast Iron	Cast Iron
Agitator	28% Chr	28% Chr	28% Chr	28% Chr	28% Chr	28% Chr	28% Chr	28% Chr	28% Chr	28% Chr
Sacrificial stub shaft	N/A	N/A	N/A	N/A	N/A	N/A	N/A	N/A	N/A	N/A

MODEL NUMBER	DPF-30	DPF-30B	DPF-50	DPF-50B	DPF-75	DPF-75B	DP-100B	DP-110B	DP-150B
Discharge diameter - inch (mm)	4 (100)	6 (150)	6 (150)	8 (200)	6 (150)	8 (200)	8 (200)	8 (200)	10 (250)
Flow at rated point - Usgpm (m3/min)	400 (1.5)	880 (3.33)	880 (3.33)	1600 (6.0)	880 (3.33)	1600 (6.0)	1600 (6.0)	1600 (6.0)	3200 (12)
Head at rated point - ft (m)	98 (29.9)	49 (11.9)	82 (25.0)	48 (14.6)	115 (35.2)	95 (29.0)	98 (30.0)	130 (40.0)	72 (22.0)
Impeller diameter - inch (mm)	16.56 (420)	14.0 (358)	14.94 (380)	14.94 (380)	16.92 (430)	16.92 (430)	21.65 (550)		25 (635)
Impeller - number of vanes	2	3	2	3	3	3	3	3	2
Max. solid size - inch (mm)	1.4 (35)	2.4 (60)	2.4 (60)	2.4 (60)	2.4 (60)	2.4 (60)	2.4 (60)	2.0 (50)	4.72 (120)
Weight without cable - lb (kg)	1653 (750)	1610 (730)	2100 (950)	2140 (970)	2410 (1095)	2450 (1113)	4850 (2200)	4850 (2200)	7700 (3500)
Standard motor hp	30	30	50	50	75	75	100	110	150
Optional motor hp	40	40	60 or 75	60 or 75	Inquire	Inquire	Inquire	Inquire	Inquire
Standard seal	Toyo lip	Toyo lip	Toyo lip	Toyo lip	Toyo lip	Toyo lip	Toyo lip	Toyo lip	Toyo lip
Oil capacity - slurry lip seal - Usgal	1.56 (5.9)	1.56 (5.9)	1.64 (6.2)	1.64 (6.2)	1.64 (6.2)	1.64 (6.2)	6.6 (25)	6.6 (25)	7.9 (30)
Oil capacity - mechanical seal - USgal (l)	1.24 (4.7)	1.24 (4.7)	1.3 (5.0)	1.3 (5.0)	1.3 (5.0)	1.3 (5.0)	6.6 (25)	6.6 (25)	7.9 (30)
Number of bearings	4	4	4	4	4	4	5	5	6
Speed (rpm)	1185	1185	1185	1185	1185	1185	885	885	705
Voltage	220/460/575	220/460/575	220/460/575	220/460/575	220/460/575	220/460/575	460 / 575	460 / 575	460 / 575
F.L. current	80/40/ 32	80/40/32	126/63 / 50	126/63/50	182/91/77	182/91/77	124/103	124/103	176/145
Breaker settings	108/54/43	108/54/43	170/85/67	170/85/67	245/123/104	245/123/104	167 / 138	167 / 138	237 / 195
Motor protector - Klixon (Thermostat in windings from DPF-15)	Standard	Standard	Standard	Standard	Standard	Standard	Standard	Standard	Standard
Moisture sensor + relay	Standard	Standard	Standard	Standard	Standard	Standard	Standard	Standard	Standard
Starting method	D.O.L.	D.O.L.	D.O.L.	D.O.L.	D.O.L.	D.O.L.	D.O.L.	D.O.L.	D.O.L.
Motor service factor	1.35	1.35	1.35	1.35	1.35	1.35	1.35	1.2	1.35
Sensor cable (replacement type)	sow 4 -10	sow 4 - 10	sow 4 - 10	sow 4 - 10	sow 4 - 10	sow 4 - 10	sow 4 - 10	sow 4 - 10	N/A
Power cable (replacement type)	ggc 3c - 4	ggc 3c - 4	ggc 3c - 1	ggc 3c - 1	ggc 3c - 1	ggc 3c - 1	ggc 3c -3/0	ggc 3c - /0	ggc 3c -50*
Electric cable length - ft (m)	65 (20)	65 (20)	65 (20)	65 (20)	65 (20)	65 (20)	65 (20)	65 (20)	65 (20)
Insulation Class	F	F	F	F	F	F	B	B	B
Max. pumpage temp. STD INS.	115YF	115YF	115YF	115YF	115YF	115YF	115YF	115YF	115YF
Max. pumpage temp. OPT INS.	175YF	175YF	175YF	175YF	175YF	175YF	175YF	175YF	175YF
Max. run time motor in air	15 min	15 min	15 min	15 min	15 min	15 min	15 min	15 min	15 min
Water jacket	Optional	Optional	Optional	Optional	Optional	Optional	Optional	Optional	Optional
Water jacket flow rate	3-5 gpm	3-5 gpm	3-5 gpm	3-5 gpm	3-5 gpm	3-5 gpm	3-5 gpm	3-5 gpm	3-5 gpm
Shaft	Alloy Steel	Alloy Steel	Alloy Steel	Alloy Steel	Alloy Steel	Alloy Steel	Alloy Steel	Alloy Steel	Alloy Steel
Pump casing STD	Ductile Iron	Ductile Iron	Ductile Iron	Ductile Iron	Ductile Iron	Ductile Iron	Ductile Iron	Ductile Iron	Ductile Iron
Pump casing OPT	28% Chr	28% Chr	28% Chr	28% Chr	28% Chr	28% Chr	28% Chr	28% Chr	28% Chr
Impeller	28% Chr	28% Chr	28% Chr	28% Chr	28% Chr	28% Chr	28% Chr	28% Chr	28% Chr
Wear plate - top	28% Chr	28% Chr	28% Chr	28% Chr	28% Chr	28% Chr	28% Chr	28% Chr	28% Chr
Wear plate - bottom	28% Chr	28% Chr	28% Chr	28% Chr	28% Chr	28% Chr	28% Chr	28% Chr	28% Chr
Suction cover	Cast Iron	Cast Iron	Cast Iron	Cast Iron	Cast Iron	Cast Iron	Cast Iron	Cast Iron	Cast Iron
Agitator	28% Chr	28% Chr	28% Chr	28% Chr	28% Chr	28% Chr	28% Chr	28% Chr	28% Chr
Sacrificial stub shaft	N/A	N/A	Included	Included	Included	Included	Included	Included	Included

Legendary DP Curves

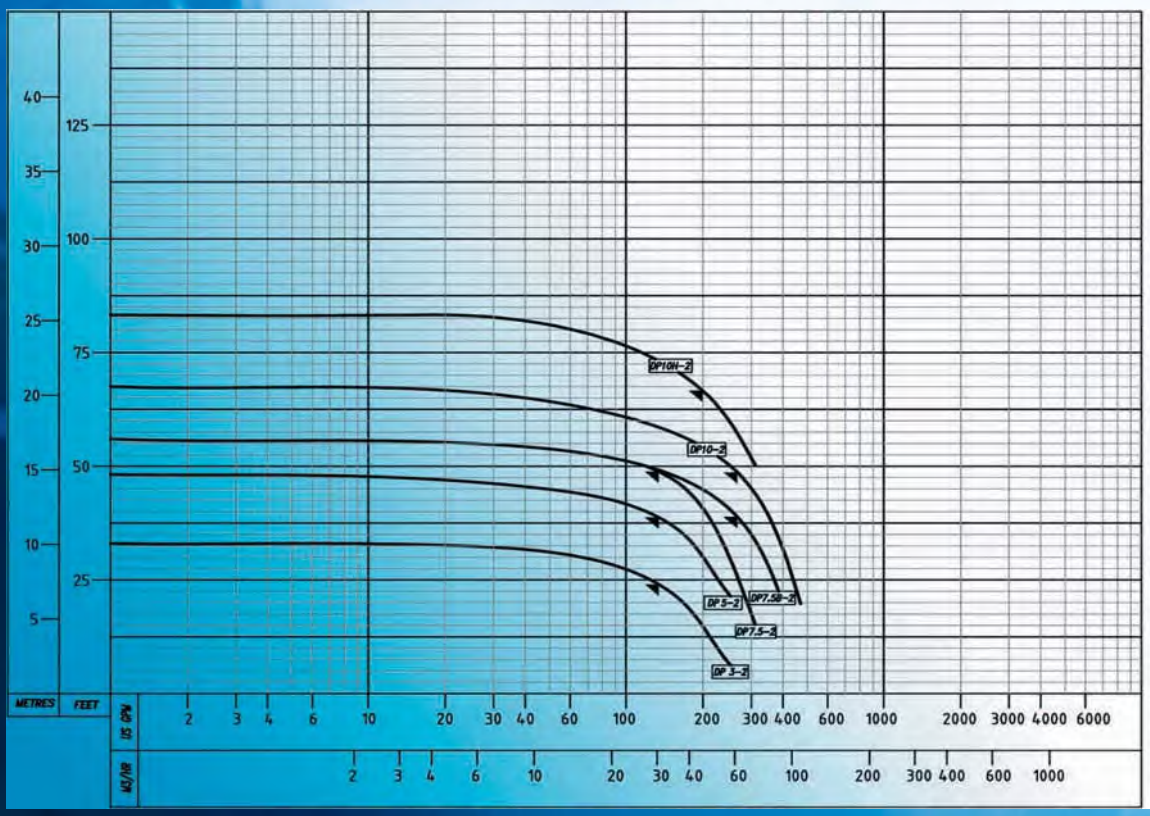

TOYO PUMPS

WWW.TOYOPUMPS.COM

TOYO PUMPS NORTH AMERICA CORPORATION
BURNABY, BRITISH COLUMBIA
CANADA V5C 6H2
TEL : (604)298-1213 FAX : (604)298-7773

PUMP MODEL	DP 3-2 TO 10H-2		
CURVE NUMBER	A7639	REV.	0
CAPACITIES TO:	M3/HR	74 @ BEP	
	U.S. GPM	325 @ BEP	
HEAD TO:	METRES	16 @ BEP	
	FEET	52.5 @ BEP	

TPNA MODEL	DISCHARGE		MAX #SOLIDS		IMPELLER	
	MM	IN	MM	IN	MM	IN
DP3-2	80	3	20	0.8	185	7.3
DP5-2	80	3	20	0.8	209	8.2
DP7.5-2	80	3	25	1.0	232	9.1
DP7.5B-2	100	4	25	1.0	232	9.1
DP10-2	100	4	25	1.0	242	9.5
DP10H-2	100	4	14	0.6	268	10.5

PERFORMANCE FOR WATER @ 68°F/20°C AND 1.0 S.G. CORRECT FOR OTHER CONDITIONS AND/OR SOLIDS EFFECT

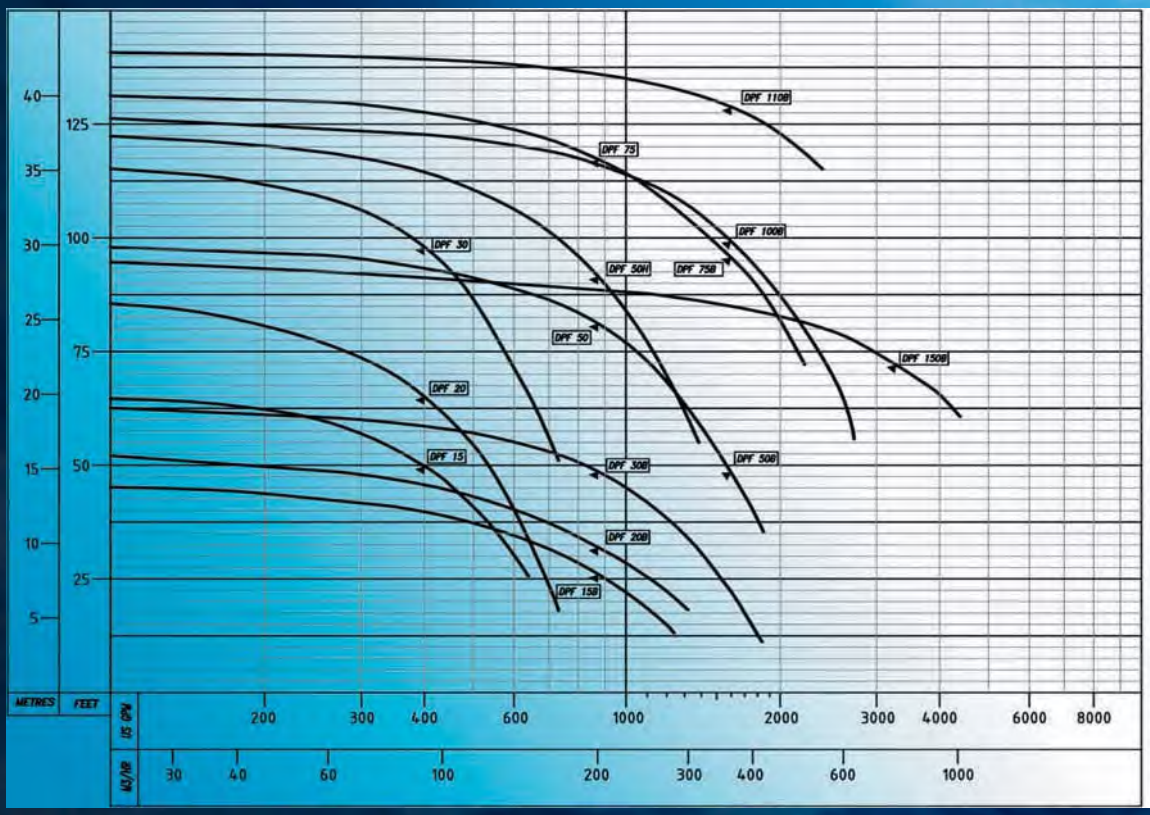

TOYO PUMPS

WWW.TOYOPUMPS.COM

TOYO PUMPS NORTH AMERICA CORPORATION
BURNABY, BRITISH COLUMBIA
CANADA V5C 6H2
TEL : (604)298-1213 FAX : (604)298-7773

PUMP MODEL	DPF 15 TO 150B		
CURVE NUMBER	A7195	REV.	0
CAPACITIES TO:	M3/HR	727 @ BEP	
	U.S. GPM	3200 @ BEP	
HEAD TO:	METRES	39.6 @ BEP	
	FEET	130 @ BEP	

TPNA MODEL	DISCHARGE		MAX SOLIDS #		IMPELLER #	
	MM	IN	MM	IN	MM	IN
DP15	100	4	35	1.4	320	12.6
DP15B	150	6	60	2.4	290	11.5
DP20	100	4	35	1.4	353	13.9
DP20B	150	6	60	2.4	300	11.8
DP30	100	4	35	1.4	420	16.6
DP30B	150	6	60	2.4	358	14
DP50/B	150/200	6/8	60	2.4	380	15.0
DP50H	150	6	40	1.6	447	17.6
DP75/B	150/200	6/8	60	2.4	430	16.9
DP100B	200	8	60	2.4	550	21.7
DP110B	200	8	50	2.0	–	–
DP150B	250	10	120	4.7	635	25

PERFORMANCE FOR WATER @ 68°F/20°C AND 1.0 S.G. CORRECT FOR OTHER CONDITIONS AND/OR SOLIDS EFFECT

TOYO PUMPS

www.toyopumps.com

The Toyo Modular Program allows you the flexibility of using the wet ends below on various drive configurations. This advantage of the Toyo Product Line can significantly reduce spare parts inventory to an absolute minimum.

- Heavy solid handling capability
- Closed impeller
- Heavy metal sections for longer wear life
- Increased efficiencies in state of the art slurry pump design

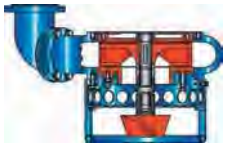

- Heavy solid handling capability
- Closed and semi-open impellers available
- Patented Agitator Option
- Heavy metal sections for longer wear life

- Spiral casing design for increased efficiency and reduced wear
- Fully recessed impeller allows for large solids passage
- Only approx 15% of pumped liquid is in contact with impeller
- Wet end standard in High Chrome and CD4
- Patented Agitator and Chopper options available

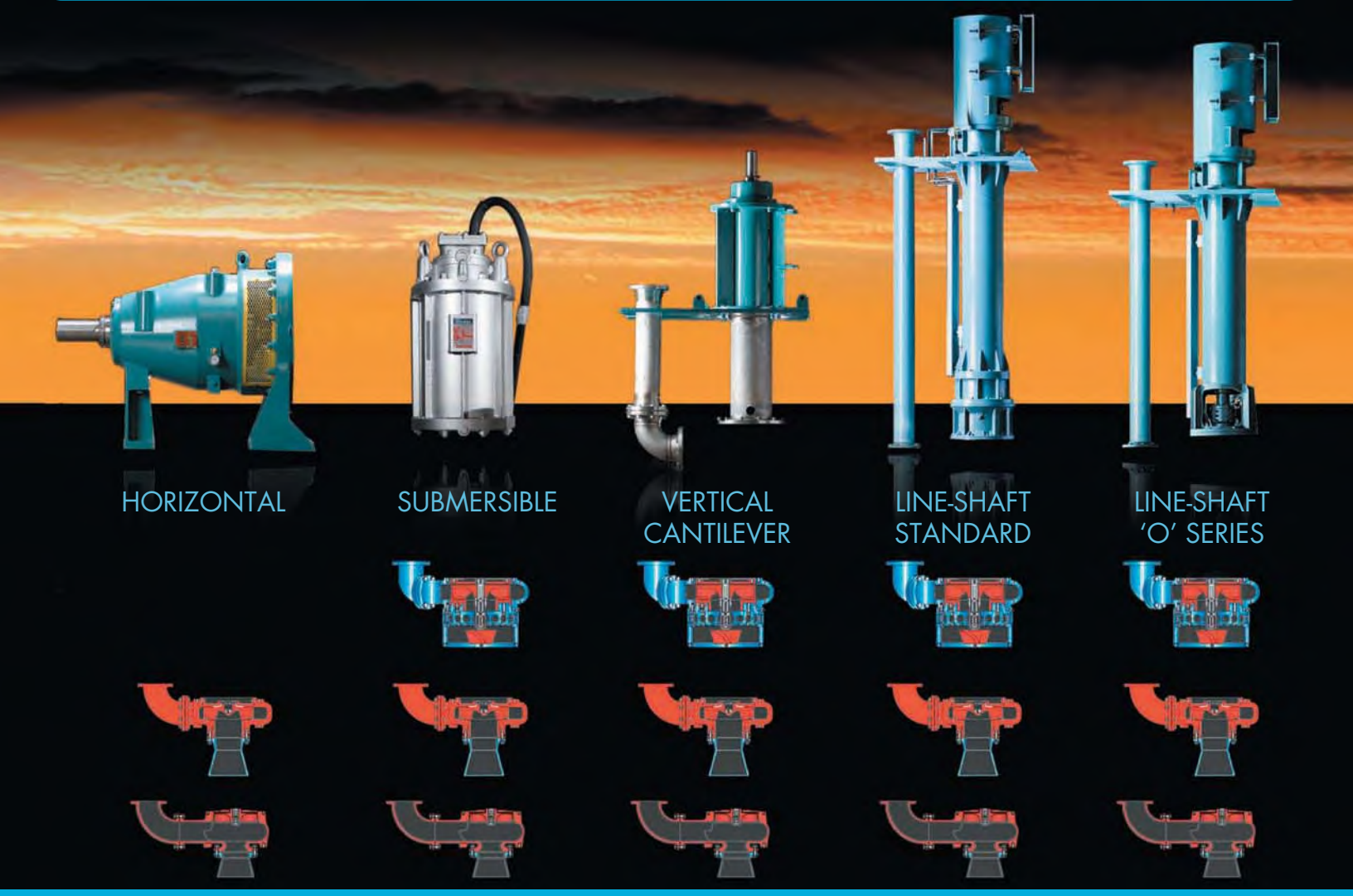

Toyo Pumps North America
Corporate Head Office
2853 Douglas Rd
Burnaby, B.C.
Canada V5C 6H2

For more information please visit
www.toyopumps.com

The information that has been provided within the pages of this brochure has been compiled in good faith and to the best of Toyo Pumps North America's ability. However, the authors of this document make no warranty, of any kind, expressed or implied, and will not be held responsible, or liable for errors, or omissions resulting in any loss or damage caused or alleged to be caused, directly, or indirectly, by information contained within. Information is also subject to change at the discretion of Toyo Pumps North America.

Copyright Toyo Pumps North America 2008. All rights Reserved.

SUBMERSIBLE AGITATOR SLURRY PUMPS

TYPE DP-15 TO DP-150B ENGINEERING SPECIFICATIONS

TSD-022 Rev.0

Highlighted for DP-30 Pump

GENERAL

The pump shall be a submersible, heavy duty, centrifugal slurry pump with an integral motor intended for continuous use on heavy concentrations of solids up to 70% by weight depending on the material being pumped.

MOTOR DESIGN

The air filled motor shall be a heavy duty submersible design. The service factor shall be a minimum of 1.35 to allow pumping in heavy concentrations of solids. Motor bearings shall be grease lubricated with the grease nipples sealed off with a removable steel cover.

SHAFT AND BEARING DESIGN

The shaft shall be of large diameter high tensile 4140 steel supported by a minimum of 4 bearings. There shall be a lower radial bearing located between the motor and the impeller, at the pump seals, to minimize shaft deflections at this point. This lower bearing shall operate in an oil bath with the seal. Bearing B10 lives shall be greater than 100,000 hours. The shaft shall be covered with replaceable hardened wear sleeves.

SEALS

Shaft sealing shall be accomplished in an oil filled chamber between the pump and the motor. The seal shall be a series of shock tolerant lip seals and special rareflon seals mounted as a cartridge on a replaceable sleeve. There shall be a minimum of 5 separate seals.

These seals shall be of progressive failure design. Should slurry enter the oil chamber there shall be three more seals protecting the motor from slurry. The oil chamber shall have a moisture sensor to warn of any impending seal leakage.

AGITATOR

The pump shall be equipped with an agitator external to the casing and below the strainer which shall be directly connected to the common pump and motor shaft. The purpose of the agitator is to pick up settled solids and increase the concentration of slurry entering the pump. The agitator must have the following three characteristics.

1. It shall be comprised of a central supporting member having a frustoconical outer surface which is larger at its upper than its lower end.
2. It shall have a plurality of vanes attached along their inner edges to the frustoconical outer surface and extend from there for a substantially uniform distance throughout their lengths.
3. The lower part of each vane shall be substantially straight while its upper part is curved toward the direction of rotation of the agitator.

The agitator shall be protected by an external framework.

WET END

Materials of construction shall be 28% high chrome cast iron for the impeller, the two replaceable wear plates, and agitator. The hardness shall be in the range of 600-650 BHN.

The wet end shall be of bottom suction single volute design with an external replaceable side discharge elbow and shall be capable of passing 1.4 inch solids. The bottom wear plate shall be adjustable to accommodate wear.

OVERALL

The pump speed shall be within the range of 705 to 1160 rpm. The overall weight of the pump excluding water jackets or any accessories shall be 1914 lbs. The pump shall come complete with 65 feet of cable.

ELECTRICAL INFORMATION SHEET

TYPE DP & ET

TSD-136 Rev.1

PUMP TYPE	OUTPUT HP	VOLTS V	FULL LOAD CURRENT A	EFFICIENCY %	POWER FACTOR	DIRECT STARTING CURRENT A	STARTING TIME SEC.	SPEED RPM	SUITABLE CABLE SIZES
ET-3 / DP-3	3	460 575	4.2 3.4	79 77	0.835 0.840	21.9 20.6	0.3	1740	10-4c SOW
ET-5 / DP-5	5	460 575	6.6 5.3	85 83	0.825 0.840	31.2 33.9	0.4	1740	10-4c SOW
ET-7.5 / ET-7.5B / DP-7.5 / DP-7.5B	7.5	460 575	10.1 8	84.5 83.5	0.805 0.825	50.3 43.7	0.4	1750	8-4c SOW
ET-10 / DP-10	10	460 575	13 10.3	87.5 86.5	0.825 0.845	75.3 63.9	0.3	1750	8-4c SOW
DP-15 / DP-15B	15	460 575	20 16	87.5 86	0.790 0.800	118 87	0.5	1170	8-4c SOW
DP-20 / DP-20B	20	460 575	27 21	88.5 88	0.785 0.810	201 141	0.5	1160	8-4c SOW
DPS-20H	20	460 575	27 21	89.5 89	0.790 0.800	189 134	0.6	1760	8-4c SOW
DPS-25	25	460 575	32 26	91 90	0.800 0.800	200 165	0.6	1760	4-3c GGC
DP-30 / DP-30B / DP-30BH	30	460 575	40 32	88 87	0.785 0.795	260 203	0.6	1185	4-3c GGC
DP-40B	40	460 575	50 40	90 90	0.840 0.840	270 215	0.4	1170	4-3c GGC
DP-50 / DP-50B / DP-50H / DP-50HH / DP-50BL	50	460 575	63 50	90.5 90	0.815 0.820	359 310	0.5	1185	1-3c GGC
DP-60B	60	460 575	75 61	91 91	0.810 0.810	510 415	0.4	1170	1-3c GGC
DPS-60	60	460 575	75 60	90 90	0.840 0.840	470 380	0.5	1760	1-3c GGC
DP-75B	75	460 575	97 77	91 90	0.820 0.820	567 480	0.4	1170	1-3c GGC
DP-100B / DP-100BH / DP-100BL	100	460 575	124 103	92.5 91	0.820 0.800	770 610	0.9	885	3/0-3c GGC
DP-150B	150	460 575	176 145	93.5 92	0.840 0.825	1200 960	1.3	705	250 MCM 3c-GGC

NOTE: These cable sizes are based on lengths up to about 200 feet. For runs above this, voltage drops will be experienced and larger cable sizes will be required.

DPF / DP HEAVY DUTY SUBMERSIBLE PUMPS - SPECIFICATION SHEET

TSD-366 Rev 0

*Requires modification to the packing gland

MODEL NUMBER	DPF-15	DPF-15B	DPF-20	DPF-20B	DPF-30	DPF-30B	DPF-50	DPF-50B	DPF-75	DPF-75B	DP-100B	DP-110B	DP-150B
Discharge diameter - in (mm)	4 (100)	6 (150)	4 (100)	6 (150)	4 (100)	6 (150)	6 (150)	8 (200)	6 (150)	8 (200)	8 (200)	8 (200)	10 (250)
Flow at rated point Usgpm(m^3/min)	400 (1.5)	880 (3.33)	400 (1.5)	880 (3.33)	400 (1.5)	880 (3.33)	880 (3.33)	1600 (6.0)	880 (3.33)	1600 (6.0)	1600 (6.0)	1600 (6.0)	3200 (12)
Head at rated point - ft (m)	49 (11.9)	24 (7.3)	65 (19.8)	33 (10.0)	98 (29.9)	49 (11.9)	82 (25.0)	48 (14.6)	115 (35.2)	95 (29.0)	98 (30.0)	130 (40.0)	72 (22.0)
Impeller diameter - inch (mm)	12.6 (320)	11.5 (290)	13.9 (353)	11.8 (300)	16.56 (420)	14.0 (358)	14.94 (380)	14.94 (380)	16.92 (430)	16.92 (430)	21.65 (550)		25 (635)
Impeller - number of vanes	3	3	2	3	2	3	2	3	3	3	3	3	2
Max. solid size - inch (mm)	1.4 (35)	2.4 (60)	1.4 (35)	2.4 (60)	1.4 (35)	2.4 (60)	2.4 (60)	2.4 (60)	2.4 (60)	2.4 (60)	2.4 (60)	2.0 (50)	4.72 (120)
Weight without cable - lb (kg)	1036 (470)	1124 (510)	1212(550)	1190(540)	1653 (750)	1610 (730)	2100 (950)	2140 (970)	2410 (1095)	2450 (1113)	4850 (2200)	4850 (2200)	7700 (3500)
Standard motor hp	15	15	20	20	30	30	50	50	75	75	100	110	150
Optional motor hp	20	20	30	30	40	40	60 or 75	60 or 75	Inquire	Inquire	Inquire	Inquire	Inquire
Standard seal	Toyo lip	Toyo lip	Toyo lip	Toyo lip	Toyo lip	Toyo lip	Toyo lip	Toyo lip	Toyo lip	Toyo lip	Toyo lip	Toyo lip	Toyo lip
Oil capacity – Lip seal - USgal(l)	1.1 (4.1)	1.1 (4.1)	1.1 (4.1)	1.1 (4.1)	1.56 (5.9)	1.56 (5.9)	1.64 (6.2)	1.64 (6.2)	1.64 (6.2)	1.64 (6.2)	6.6 (25)	6.6 (25)	7.9 (30)
Oil capacity – Mech seal - USgal(l)	0.87 (3.3)	0.87 (3.3)	0.87 (3.3)	0.87 (3.3)	1.24 (4.7)	1.24 (4.7)	1.3 (5.0)	1.3 (5.0)	1.3 (5.0)	1.3 (5.0)	6.6 (25)	6.6 (25)	7.9 (30)
Number of bearings	4	4	4	4	4	4	4	4	4	4	5	5	6
Speed (rpm)	1170	1170	1160	1160	1185	1185	1185	1185	1185	1185	885	885	705
Voltage	220/460/575	220/460/575	220/460/575	220/460/575	220/460/575	220/460/575	220/460/575	220/460/575	220/460/575	220/460/575	460 / 575	460 / 575	460 / 575
F.L. current	40/20/16	40/20/16	54/27/21	54/27/21	80/40/ 32	80/40/32	126/63 / 50	126/63/50	182/91/77	182/91/77	124/103	124/103	176/145
Breaker settings	54/27/21.6	54/27/21.6	73/36/28	73/36/28	108/54/43	108/54/43	170/85/67	170/85/67	245/123/104	245/123/104	167 / 138	167 / 138	237 / 195
Thermostat in windings	Standard	Standard	Standard	Standard	Standard	Standard	Standard	Standard	Standard	Standard	Standard	Standard	Standard
Moisture sensor + relay	Standard	Standard	Standard	Standard	Standard	Standard	Standard	Standard	Standard	Standard	Standard	Standard	Standard
Starting method	D.O.L.	D.O.L.	D.O.L.	D.O.L.	D.O.L.	D.O.L.	D.O.L.	D.O.L.	D.O.L.	D.O.L.	D.O.L.	D.O.L.	D.O.L.
Motor service factor	1.35	1.35	1.35	1.35	1.35	1.35	1.35	1.35	1.35	1.35	1.35	1.2	1.35
Replacement Sensor cable	sow 4 - 10	sow 4 - 10	sow 4 - 10	sow 4 - 10	sow 4 -10	sow 4 - 10	sow 4 - 10	sow 4 - 10	sow 4 - 10	sow 4 - 10	sow 4 - 10	sow 4 - 10	N/A
Replacement Power cable	ggc 3c - 8	ggc 3c - 8	ggc 3c - 8	ggc 3c - 8	ggc 3c - 4	ggc 3c - 4	ggc 3c - 1	ggc 3c - 1	ggc 3c - 1	ggc 3c - 1	ggc 3c -3/0	ggc 3c - 3/0	ggc 3c -250*
Electric cable length - ft (m)	65 (20)	65 (20)	65 (20)	65 (20)	65 (20)	65 (20)	65 (20)	65 (20)	65 (20)	65 (20)	65 (20)	65 (20)	65 (20)
Insulation Class	F	F	F	F	F	F	F	F	F	F	B	B	B
Max pumpage temp Std	115°F	115°F	115°F	115°F	115°F	115°F	115°F	115°F	115°F	115°F	115°F	115°F	115°F
Max pumpage temp Optional	175°F	175°F	175°F	175°F	175°F	175°F	175°F	175°F	175°F	175°F	175°F	175°F	175°F
Max run time in air - lip seal only	15 min	15 min	15 min	15 min	15 min	15 min	15 min	15 min	15 min	15 min	15 min	15 min	15 min
Water jacket	Optional	Optional	Optional	Optional	Optional	Optional	Optional	Optional	Optional	Optional	Optional	Optional	Optional
Water jacket flow rate	3-5 gpm	3-5 gpm	3-5 gpm	3-5 gpm	3-5 gpm	3-5 gpm	3-5 gpm	3-5 gpm	3-5 gpm	3-5 gpm	3-5 gpm	3-5 gpm	3-5 gpm
Shaft	Alloy Steel	Alloy Steel	Alloy Steel	Alloy Steel	Alloy Steel	Alloy Steel	Alloy Steel	Alloy Steel	Alloy Steel	Alloy Steel	Alloy Steel	Alloy Steel	Alloy Steel
Pump casing STD	Ductile Iron	Ductile Iron	Ductile Iron	Ductile Iron	Ductile Iron	Ductile Iron	Ductile Iron	Ductile Iron	Ductile Iron	Ductile Iron	Ductile Iron	Ductile Iron	Ductile Iron
Pump casing OPT	28% Chr	28% Chr	28% Chr	28% Chr	28% Chr	28% Chr	28% Chr	28% Chr	28% Chr	28% Chr	28% Chr	28% Chr	28% Chr
Impeller	28% Chr	28% Chr	28% Chr	28% Chr	28% Chr	28% Chr	28% Chr	28% Chr	28% Chr	28% Chr	28% Chr	28% Chr	28% Chr
Wear plate - top	28% Chr	28% Chr	28% Chr	28% Chr	28% Chr	28% Chr	28% Chr	28% Chr	28% Chr	28% Chr	28% Chr	28% Chr	28% Chr
Wear plate - bottom	28% Chr	28% Chr	28% Chr	28% Chr	28% Chr	28% Chr	28% Chr	28% Chr	28% Chr	28% Chr	28% Chr	28% Chr	28% Chr
Suction cover	Cast Iron	Cast Iron	Cast Iron	Cast Iron	Cast Iron	Cast Iron	Cast Iron	Cast Iron	Cast Iron	Cast Iron	Cast Iron	Cast Iron	Cast Iron
Agitator	28% Chr	28% Chr	28% Chr	28% Chr	28% Chr	28% Chr	28% Chr	28% Chr	28% Chr	28% Chr	28% Chr	28% Chr	28% Chr
Sacrificial stub shaft	N/A	N/A	N/A	N/A	N/A	N/A	Included	Included	Included	Included	Included	Included	Included

TOYO PUMPS

The Innovators

HEAVY DUTY SUBMERSIBLE AGITATOR PUMPS

TYPE DP-15 to DP-150B

DIMENSIONAL DRAWING

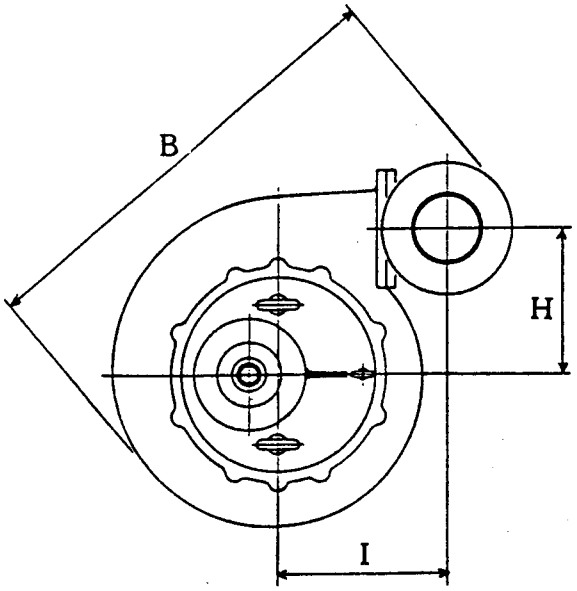

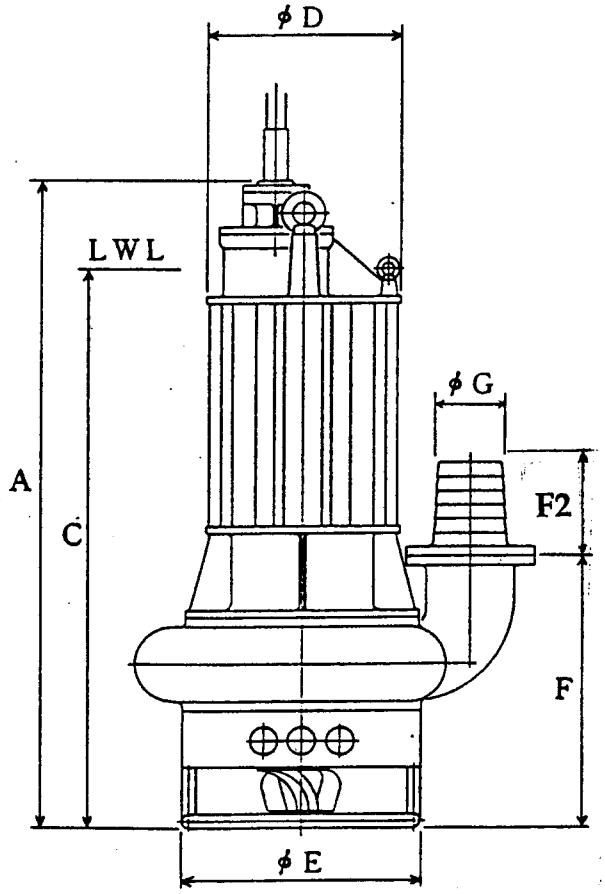

HEAVY DUTY SUBMERSIBLE AGITATOR PUMPS

	DP-15	DP-15B	DP-20	DP-20B	DP-30	DP-30B	DP-50	DP-50B	DP-100B	DP150B
A	1295 (51.0	1295 (51.0	1310 (51.6	1310 (51.6	1390 (54.7	1390 (54.7	1575 (62.0	1575 (62.0	1875 (73.8	2794 (110.0
B	750 (29.5)	840 (33.1)	825 (32.5)	840 (33.1)	910 (35.8)	955 (37.6)	1020 (40.2	1065 (41.9	1365 (53.7	1695 (66.7)
C	1100 (43.3	1100 (43.3	1100 (43.3	1100 (43.3	1200 (47.2	1200 (47.2	1350 (53.2	1350 (53.2	1650 (65.0	2400 (94.5)
D	350 (13.8)	350 (13.8)	380 (15.0)	380 (15.0)	415 (16.3)	415 (16.3)	460 (18.1)	460 (18.1)	600 (23.6)	640 (25.2)
E	445 (17.5)	445 (17.5)	515 (20.3)	445 (17.5)	635 (25.0)	510 (20.1)	560 (22.1)	560 (22.1)	760 (29.9)	1010 (39.8)
F1	500 (19.7)	560 (22.1)	495 (19.5)	560 (22.1)	515 (20.3)	580 (22.8)	635 (25.0)	655 (25.8)	745 (29.3)	970 (38.2)
F2	143 (5.6)	203 (8.0)	143 (5.6)	203 (8.0)	143 (5.6)	203 (8.0)	203 (8.0)	223 (8.8)	223 (8.8)	253 (10.0)
G	100 (3.9)	150 (5.9)	100 (3.9)	150 (5.9)	100 (3.9)	150 (5.9)	150 (5.9)	200 (7.9)	200 (7.9)	250 (9.8)
H	240 (9.5)	255 (10.1)	280 (11.0)	255 (10.1)	320 (12.6)	310 (12.2)	340 (13.4)	340 (13.4)	430 (16.9)	530 (20.9)
I	298 (11.7)	333 (13.1)	313 (13.1)	333 (13.1)	333 (13.1)	363 (14.3)	383 (15.1)	413 (16.3)	563 (22.2)	723 (28.5)

Dimensions in mm (inches) *Measurements are approximate only.*

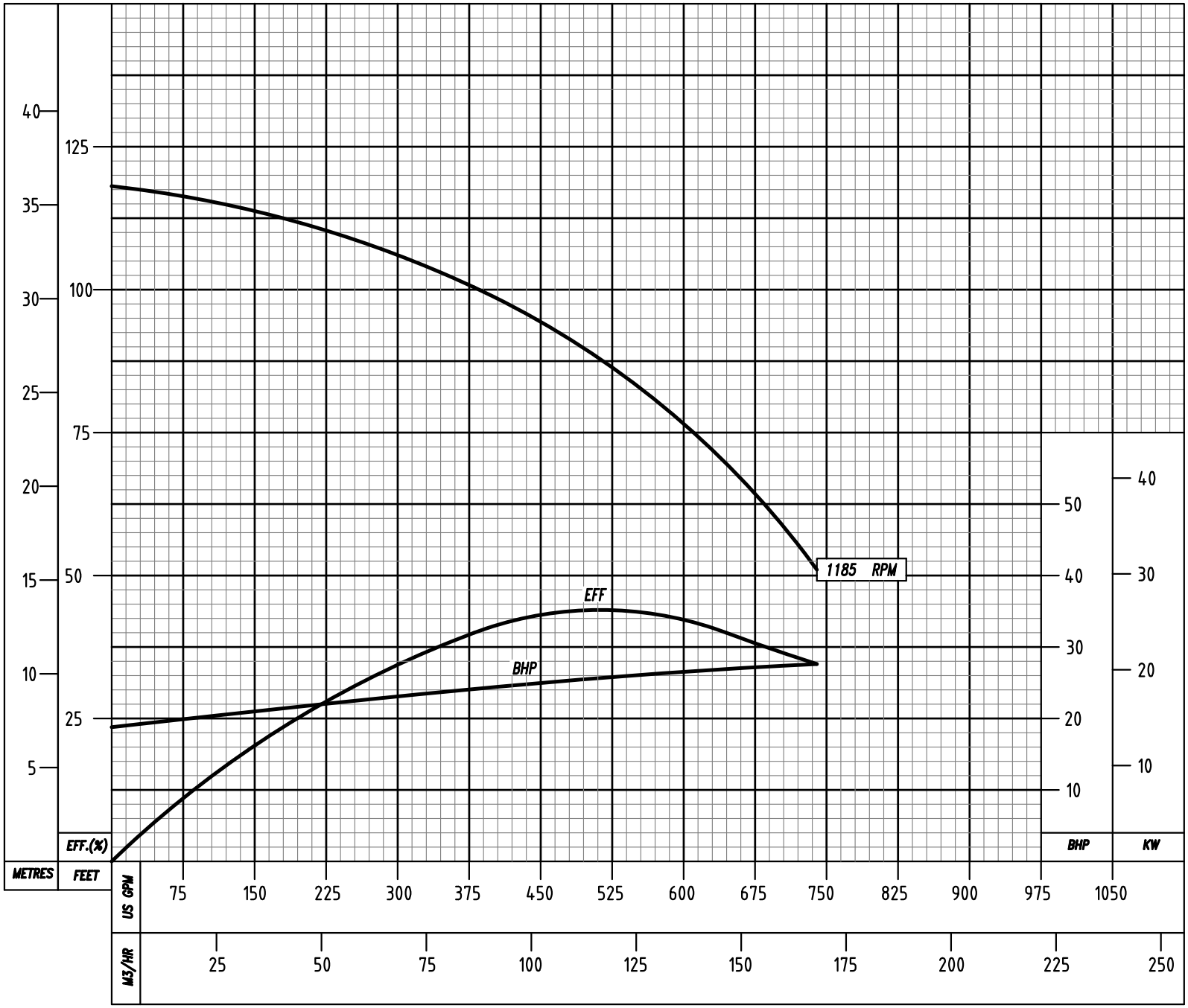

TOYO PUMPS

WWW.TOYOPUMPS.COM

TOYO PUMPS NORTH AMERICA CORPORATION
BURNABY, BRITISH COLUMBIA
CANADA V5C 6H2
TEL : (604)298-1213 FAX : (604)298-7773

PUMP MODEL	DPF-30		
CURVE NUMBER	A3028	REV.	0
EFFECTIVE DATE	JULY 16 1996		
SUPERSEDES	1174	REV.	1

DISCHARGE	INCHES	4
	MM	100
SUCTION	INCHES	-
	MM	-
TEST NUMBER		-

IMPELLER NBR	TP 30-406	
IMPELLER TYPE	CLOSED	
IMP. DIAMETER	INCHES	16.56
	MM	420
NUMBER OF VANES		2
MAX.PARTICLE	INCHES	1.4
	MM	35
VOLUTE NUMBER	TP 30-300-3	

MOTOR OUTPUT	HP/KW	30 / 22
PHASE x VOLTAGE	220/460/575 V	
RATED CURRENT	AMPS	80/40/32
WINDING INSULATION CLASS		B
POLES/REVOLUTION	6 P/S.S. 1200 RPM	

PERFORMANCE FOR WATER @ 68°F/20°C AND 1.0 S.G. CORRECT FOR OTHER CONDITIONS AND/OR SOLIDS EFFECT

PEMO PUMPS

for FILTER PRESS

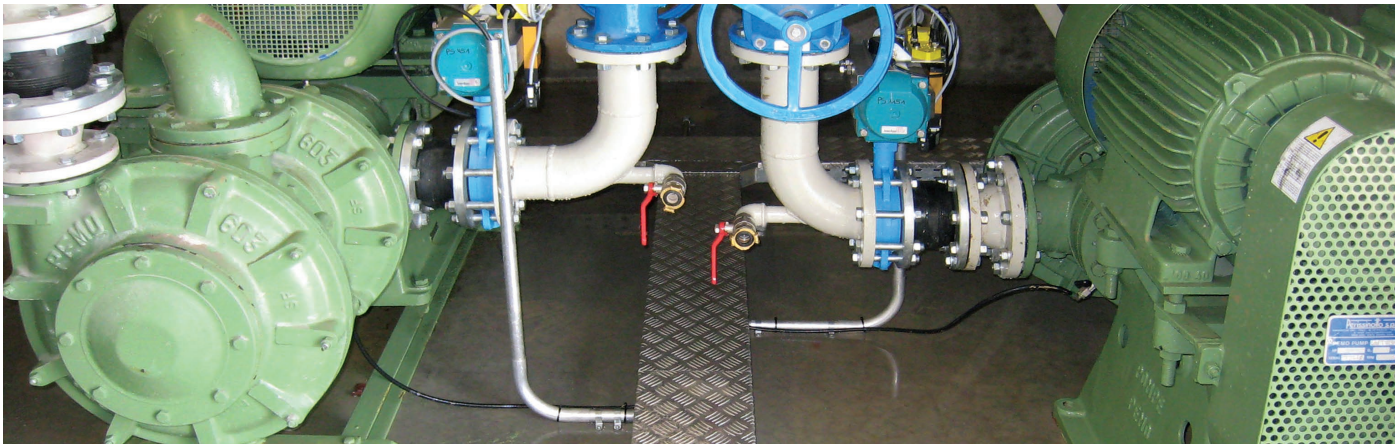

PEMO PUMPS for filter press

SINGLE , DOUBLE AND TRIPLE STAGE FILTER PRESS FEED PUMPS

- Pemo's Filter Press Feed Pumps are specifically designed for this application and there is little direct competition in this market due to the wide variety of models developed for this purpose.
- The main advantage of the Pemo Filter Press Pumps is the Side Suction on the Horizontal Design. The seal in this design only sees the feed pressure of the feed slurry instead of the high pressure from the discharge of the pump. This allows simple mechanical seal flushing systems to be used. The seal flush system is sealed so no water or sludge will leak during the flush cycle.
- Pemo Filter Press Feed pumps are designed specifically for abrasive and/or corrosive applications using a variety of materials such as rubber lining, Hardalloy PEMO (750-800 HB), Stainless Steel or Hastelloy.
- Capacities when filling the filter press can reach 6613 GPM (1500 m^3/h).
- Final Pressure can exceed 294 psi (20 bar) for the Triple Stage and for some Double Stage Models, creating a much dryer cake than single stage pumps can provide.
- Mechanical Seals are all Silica Carbide or Tungsten Carbide.
- The bearings are all specifically designed for filter press applications and are oil lubricated.
- Lubrication of the 2 mechanical seals can be done by use of clean water at 30 psi minimum pressure. It can also be done by use of glicole in a closed pressurized system.
- Some PEMO filter press pumps can also be provided in Submersible or Vertical versions.

PRIMARY MARKETS for PEMO FILTER PRESS FEED PUMPS

- Mining, Quarries and Mineral Extraction.
- Power Plants.
- Aggregate Industry.
- Stone Industry (Granite and Marble).
- Ceramic Industry.
- Chemical Industry.
- Steel Mills.
- Industrial Wastewater Treatment.

PEMO PUMPS for filter press

the SINGLE STAGE RUBBER-LINED VERSION

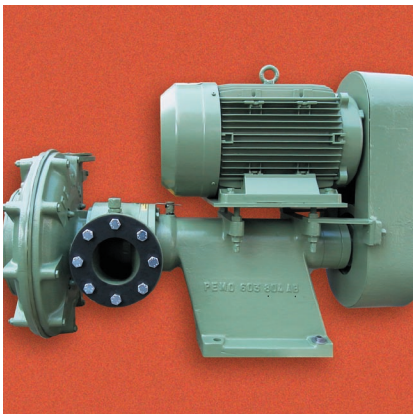

- Currently there are 9 different Models available: 302, 403, 503, 603, K125, 1004, P200, I-270, C300.
- Capacities when filling the filter press range from 88-6613 GPM (20 to 1500 m^3/h).
- Discharge pressures range from 59 to 147 psi (4-10 bar).
- These pumps are highly recommended for abrasive and corrosive slurry applications.
- Custom designed Pumps can be provided for specific applications.

Pump model	Starting Max Flow		Max Head		Max Pressure	
	(m3/h)	(gpm)	(m/H2O)	(ft)	(Bar)	(psi)
302 AO/ABM	20	88	40	131	5	72.5
403 AO/AB-B3	50	225	50	164	6	87
503 AO/AB-B3	60	264	50	164	6	87
603 AO/AB-B55	100	440	60	196	7.5	108.75
K125 AO/AB-B75	180	793	75	246	10	159.5
1004 AO/AB-B75	250	1102	50	164	6	87
P200 AO/AB-B10	560	2469	50	164	6	87
I-270 AO/AB-B10	900	3968	50	164	6	87
C300 AO/AB-B10	1500	6613	50	164	6	87

Table with standard versions of single stage rubber lined PEMO Pumps

the DOUBLE STAGE RUBBER-LINED VERSION

- Currently there are 5 different Models available: 503, 603, K125, 1004, P200.
- Capacities when filling the filter press range from 88-2469 GPM (20 to 560 m^3/h).
- Discharge pressures range from 206 to 220 psi.
- These pumps are highly recommended for abrasive and corrosive slurry applications.
- Custom designed pumps can be provided for specific applications.

Table with standard versions of Double Stage rubber lined PEMO Pumps

Pump model	Starting Max Flow		Max Head		Max Pressure	
	(m3/h)	(gpm)	(m/H2O)	(ft)	(Bar)	(psi)
503 AO/AB/DC-B5	60	264	120	393	14	203
603 AO/AB/DC-B7	100	440	120	393	15	217.5
K125 AO/AB/DC-B75	180	793	120	393	15	217.5
1004 AO/AB/DC-B10	250	1102	110	360	15	217.5
P200 AO/AB/DC-B10	560	2469	100	328	14	203

PEMO PUMPS for filter press

the VERSIONS with HARDALLOY CASINGS

- Specifically designed for applications with coal slurry and where higher pressures are required.
- Operate at higher temperatures and long cycle times.
- Currently there is 1 model in the Single, Double and Triple stage version, and there are 3 models available in the Single and Double Stage versions.
- Recommended primarily for highly abrasive sludges.
- Model S-FP AO/AB/DC-B55 is the smaller Double and the only Triple Stage model, and it is highly recommended when longer cycle times at high pressure are required. This is more cost effective than expensive positive displacement pumps.
- Custom Designed Pumps for specific applications can also be provided.

Table with standard versions of PEMO Pumps for filter press with Hardalloy casings

Pump model	Starting Max Flow		Max Head		Max Pressure	
	(m3/h)	(gpm)	(m/H2O)	(ft)	(Bar)	(psi)
S-FP AO/AB-B3	60	264	75	246	10	145
603-H AO/AB-B55	100	440	80	262	10	145
K125-H AO/AB-B75	180	793	80	262	10	145
1004-H AO/AB-B10	250	945	70	229	8	116
P200-H AO/AB-B10	560	2469	70	229	8	116
S-FP AO/AB/DC-B55	60	264	140	459	18	261
603-H AO/AB/DC-B75	100	440	140	459	18	261
K125-H AO/AB/DC-B75	180	793	140	459	17	246.5
1004-H AO/AB/DC-B10	250	945	120	393	16	232
1004-HMC AO/AB/DC-B10	250	945	150	492	20	290
P200-H AO/AB/DC-B10	560	2469	120	393	16	232
S-FP AO/AB/TC-B77	60	264	160	525	20	290

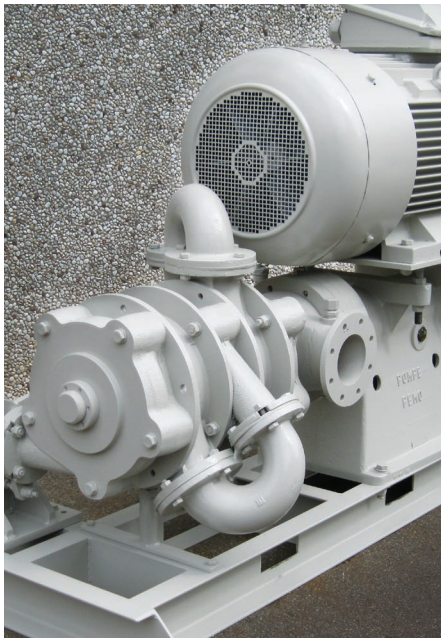

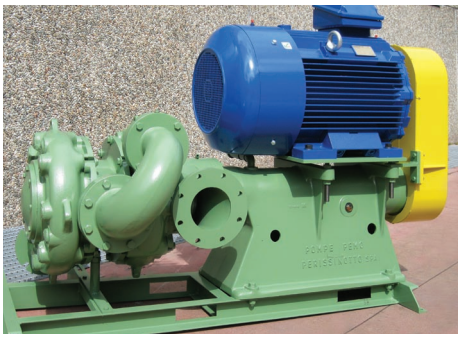

Perissinotto s.p.a.
Via Pascoli 17 - 20090 Vimodrone (MI) - ITALY
Ph +39 02 250731 - Fx +39 02 2500371 - peris@pemo.com - www.pemo.com

PEMO PUMPS IN THE WORLD

BUILT FIRST TO LAST

dynaBLEND®

Liquid Polymer Blending Systems

Fluid Dynamics INC.

our **History**

Right from the start . . .

In 1985 Fluid Dynamics developed the high energy, non-mechanical dyna**BLEND**® liquid polymer activation and blending technology. Immediately it proved to be a revolutionary and great improvement in polymer activation and blending performance. Today, the dyna**BLEND**® system remains the most effective and reliable polymer activation technology—rendering mechanical blenders obsolete except for low flow applications.

polymer **Blending**

Knowing the critical requirements of polymer blending is the first step in understanding the numerous benefits of dynaBLEND® technology. Over the years, the spectrum of available polymers has widened. Today there are more difficult-to-blend polymers than ever before. Some polymer blending systems work well on simple-to-blend polymers, but fail to effectively activate many other polymers.

As-supplied or Concentrated Polymer—Polymer is a long chain molecule having positive (cationic), negative (anionic) or neutral (non-ionic) charge sites. In its as-supplied, concentrated form, the polymer is tightly coiled. In this state, the polymer is not susceptible to damage from high mixing energy.

Effects of Insufficient Mixing Energy—When insufficient mixing energy is applied, polymer gelling or agglomeration occurs, resulting in the charge sites not being fully exposed. Overdosing of polymer is required to achieve desired performance.

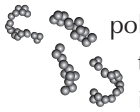

Effects of Overexposure to Mixing Energy—Overexposing polymer to mixing energy after initial activation will damage the fragile long chain molecule. Again, overdosing of polymer is required.

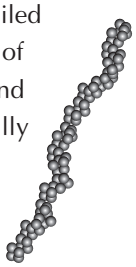

Fully Activated Polymer—Unwinding and elongating the coiled polymer molecule is necessary to expose the maximum number of charge sites to your process. The job of the polymer activation and blending system is to gently and thoroughly activate polymer. Fully elongated, undamaged polymer is the most active and effective form yet also the most fragile state. Continued exposure to mixing energy in this state will damage the fragile polymer.

the way to **Optimum** polymer performance

1. ***"Infinite Shear in Zero Time."*** Apply ultra-high mixing energy at the point of initial polymer and water contact to prevent polymer gelling or agglomeration. At this time the polymer is coiled-up and not susceptible to damage.

2. ***Create the right environment.*** Polymer solution has proven to be the ideal environment for polymer activation, as opposed to raw water. Inject neat, concentrated polymer into polymer solution, not raw water.

3. ***Prolonged turbulence.*** Expose polymer to prolonged turbulence in order to complete the blending process gently and fully.

4. ***Avoid damaging mixing energy*** after the polymer is initially activated so as not to break the fragile molecular chain.

proven **Performance**

While some polymer systems can only work well on the simple-to-blend polymers, dynaBLEND® has a proven track record of effectively activating all types of polymer. dynaBLEND is the standard for manufacturers of ultra-high molecular weight and high solids type polymers.

proven **Reliability**

dynaBLEND is designed for reliability. The non-mechanical dynaBLEND mixing chamber design inherently delivers an unequalled degree of reliability over many mechanical technologies. But we don't stop there. The polymer injection check valve is a potential maintenance issue in any polymer system. Fluid Dynamics designed the PCV valve, a large port check valve with spring-loaded stainless steel ball and Teflon® body. The PCV valve easily disassembles for inspection or cleaning simply by pulling a two-prong stainless steel pin.

proven **Quality**

Highest Quality = Lowest Life Cycle Cost! dynaBLEND is the benchmark for quality in our industry. Why? Because of the value of longevity. dynaBLEND quality is achieved by building a more rugged system with higher quality components and tight quality control using highly skilled people.

With quality comes confidence. dynaBLEND is backed by the longest warranty in our industry—two (2) year system warranty and lifetime mixing chamber warranty.

the **Choice** is clear

Consider your investment—whether it be a centrifuge, belt filter press, clarifier, filter, paper machine, or whatever your process requires, your investment is substantial. Doesn't it make sense to protect this investment?

A polymer blending and activation system can dramatically affect the performance and reliability of this process.

You Should Expect:

- ➤ Proven Performance
- ➤ Proven Reliability
- ➤ Proven Quality

What does all this mean?

A system that will deliver the lowest life-cycle cost.

dynaBLEND®
the proven solution

here's real **Confidence**

- ➤ Two Year System Warranty
- ➤ Lifetime Mixing Chamber Warranty
- ➤ Total Satisfaction Guarantee

** See Fluid Dynamics warranty for further details.*

simply the **Best** polymer system available!

dynaBLEND® L Series systems are designed to easily accept a wide range of flexible features and options. All dynaBLENDs utilize only the finest components, are built on all stainless steel frames and are designed to stand the test of time in extreme conditions and harsh environments.

dynaBLEND Construction Features

- **A** All Piping Components Rigidly Mounted to Skid
- **B** Gusseted Uprights for Rigidity
- **C** NEMA 4X Control Panel
  Fluid Dynamics is a UL Certified Panel Shop
- **D** Control Panel at Operator Eye-Level
- **E** Open Frame Design for Ease of Accessibility *Constructed of 304 SS*
- **F** Sealtite for All Power Wiring

Basic dynaBLEND and Options

- **1** Metering Pump[1]
- **2** Calibration Column (optional)
- **3** Polymer Flow Measurement (optional)
- **4** Proprietary Design Polymer Check Valve
- **5** Differential Pressure Switch (optional)
- **6** Solenoid Valve
- **7** Water Flow Measurement [2]
- **8** Liquid Filled SS Pressure Gauges
- **9** Variable Orifice Water Control Valve
- **10** dynaBLEND Mixing Chamber
- **11** Pressure Relief Valve

Optional Booster Pump Module

- **12** Booster Pump
- **13** Pressure Reducing Valve

Optional Post Dilution Module

- **14** Solenoid Valve
- **15** Water Flow Measurement [2]
- **16** Static Mixer

[1] *Can be Diaphragm or Progressing Cavity*

[2] *Can be Rotometer, Turbine Flow Meter or Magnetic Flow Meter*

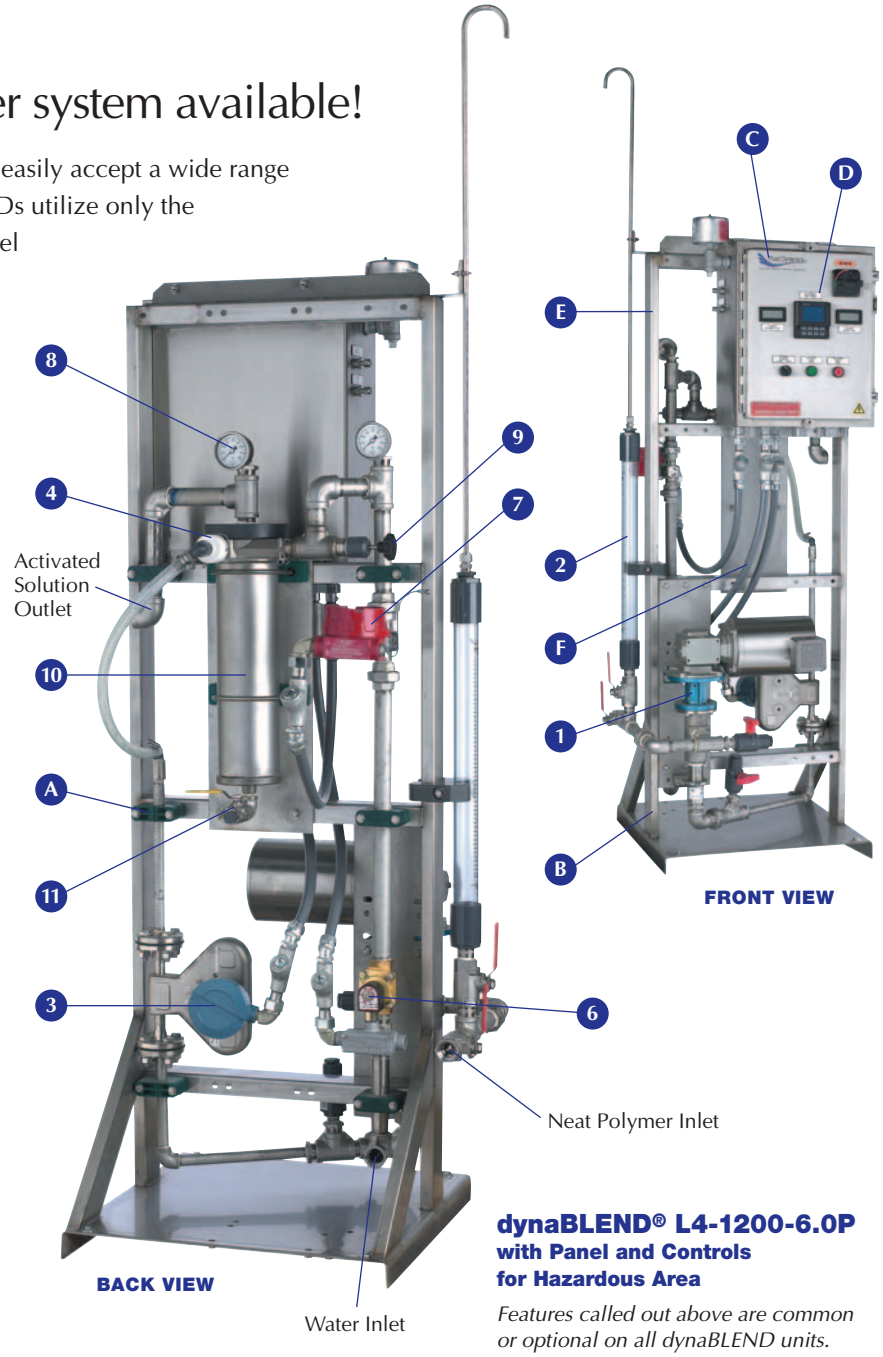

dynaBLEND® L4-1200-6.0P
with Panel and Controls for Hazardous Area

Features called out above are common or optional on all dynaBLEND units.

Flow Diagram

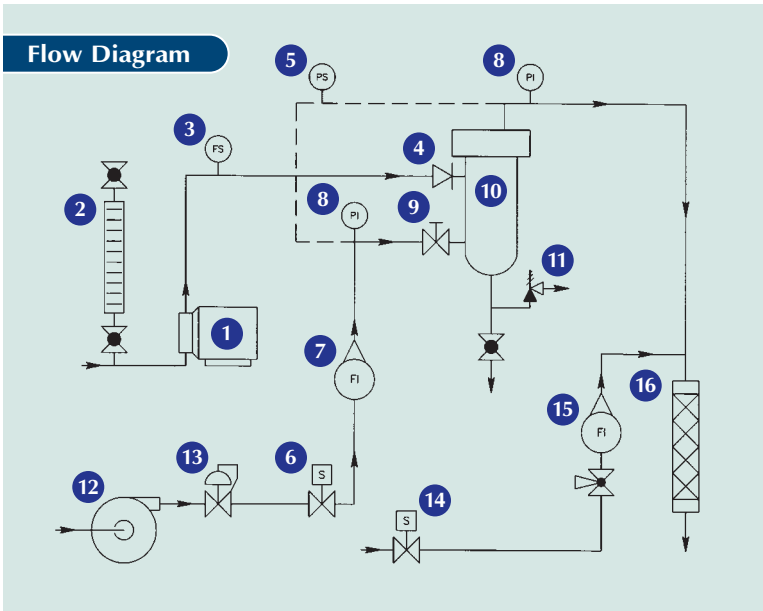

inside the dynaBLEND® system

In twenty years of independent side-by-side trials, the dynaBLEND system has proven itself superior to alternative blending methods. Success is due to its patented, non-mechanical HydroAction Technology—a technology that produces in excess of six times the mixing energy per unit volume than a comparable-sized mechanical mixer.

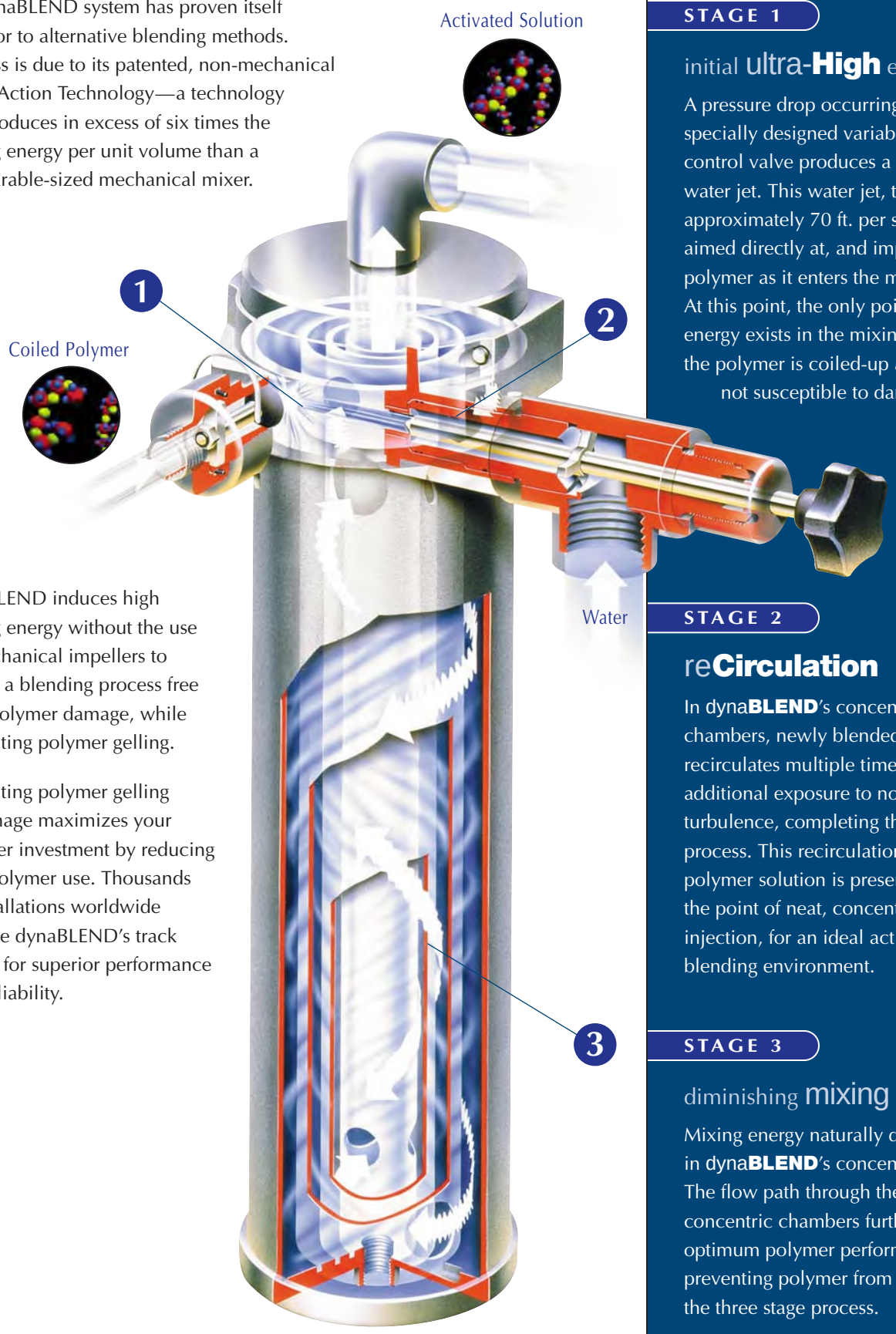

dynaBLEND induces high mixing energy without the use of mechanical impellers to ensure a blending process free from polymer damage, while preventing polymer gelling.

Preventing polymer gelling or damage maximizes your polymer investment by reducing your polymer use. Thousands of installations worldwide validate dynaBLEND's track record for superior performance and reliability.

the three stages of hydroAction

STAGE 1

initial ultra-High energy

A pressure drop occurring across the specially designed variable orifice water control valve produces a high velocity water jet. This water jet, traveling at approximately 70 ft. per second, is aimed directly at, and impinges on the polymer as it enters the mixing chamber. At this point, the only point where high energy exists in the mixing chamber, the polymer is coiled-up and not susceptible to damage.

STAGE 2

reCirculation

In dynaBLEND's concentric mixing chambers, newly blended polymer recirculates multiple times for additional exposure to non-damaging turbulence, completing the blending process. This recirculation ensures that polymer solution is present directly after the point of neat, concentrated polymer injection, for an ideal activation and blending environment.

STAGE 3

diminishing mixing Energy

Mixing energy naturally diminishes in dynaBLEND's concentric chambers. The flow path through the system's concentric chambers further ensures optimum polymer performance by preventing polymer from short-circuiting the three stage process.

series **L4-D / L6-D** specifications

The L4-D / L6-D Series dynaBLEND® is a full featured liquid polymer blending system. These are the smallest dynaBLEND units and the use of a diaphragm pump makes them the most economical polymer blending system offered by Fluid Dynamics.

BACK VIEW

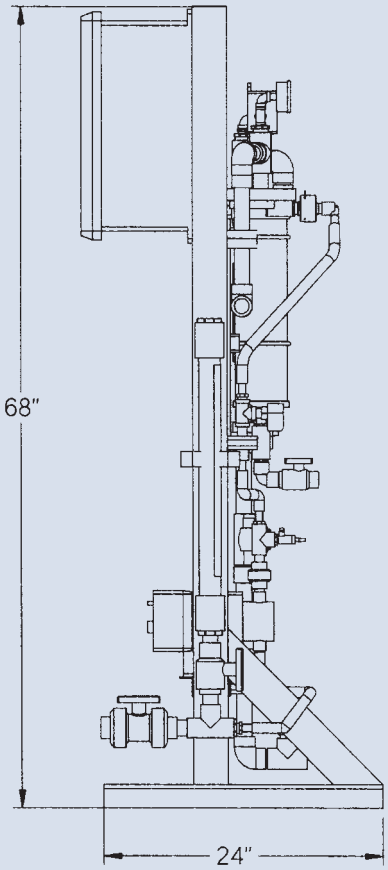

SIDE VIEW

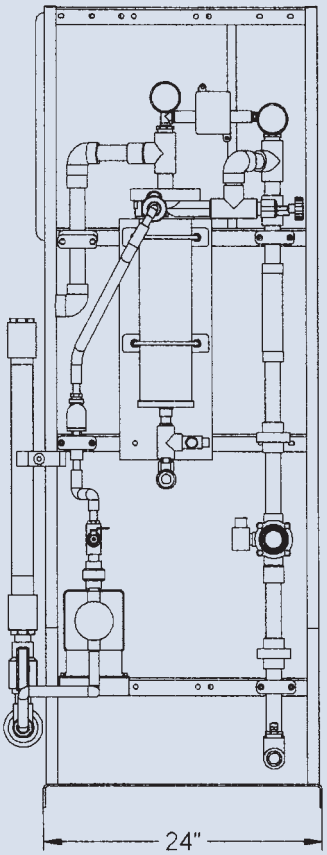

BACK VIEW

SERIES	DILUTION WATER	
L4-300-	30- 300 GPH	(113-1136 LPH)
L4-600-	60- 600 GPH	(227-2271 LPH)
L4-1200-	120-1200 GPH	(454-4543 LPH)
L6-1800-	180-1800 GPH	(681-6814 LPH)
L6-2400-	240-2400 GPH	(909-9085 LPH)
L6-3000-	300-3000 GPH	(1136-11356 LPH)

PUMP	POLYMER RANGE*	
0.4D	0.02-0.4 GPH	(0.08-1.5 LPH)
1.0D	0.05-1.0 GPH	(0.19-3.8 LPH)
2.5D	0.1-2.5 GPH	(0.38-9.4 LPH)
4.5D	0.2-4.5 GPH	(0.75-17.0 LPH)
8.0D	0.4-8.0 GPH	(1.5-30.0 LPH)

Dual pump configurations available.

dynaBLEND® MODEL EXAMPLE:

L4-600-2.5D fits applications with 60-600 GPH dilution water and 0.1-2.5 GPH polymer

WATER SUPPLY PRESSURE

Water supply must be able to provide the maximum flow rate at 35-50 psi (240-345 kPa) greater than the pressure at point of use.

OPERATING PRESSURE

100 psi maximum (689 kPa)

DIMENSIONS

24" D x 24" W x 68" H
(61cm x 61cm x 173cm)

WEIGHT

Series L4-D: 175 lbs. (80 kg)
Series L6-D: 220 lbs. (100 kg)

POWER REQUIREMENTS

Single phase 115 VAC standard

*Stated polymer pump range may not be achieved at all viscosities.

series **L4-P / L6-P** specifications

The L4-P / L6-P Series dynaBLEND® offers the same flow rates and features of the L4-D / L6-D Series with an upgrade to a progressing cavity pump. The progressing cavity pump provides increased life cycle.

BACK VIEW

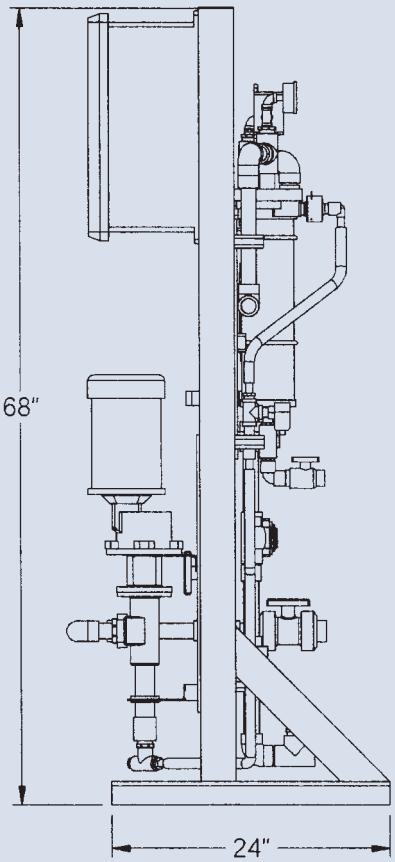

SIDE VIEW

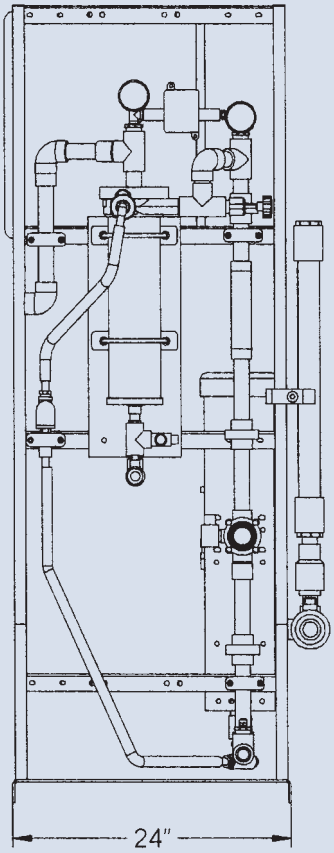

BACK VIEW

SERIES	DILUTION WATER	
L4-300-	30- 300 GPH	(113-1136 LPH)
L4-600-	60- 600 GPH	(227-2271 LPH)
L4-1200-	120-1200 GPH	(454-4543 LPH)
L6-1800-	180-1800 GPH	(681-6814 LPH)
L6-2400-	240-2400 GPH	(909-9085 LPH)
L6-3000-	300-3000 GPH	(1136-11356 LPH)

PUMP	POLYMER RANGE	
1.2P	0.12-1.2 GPH	(0.45-4.5 LPH)
3.0P	0.3-3.0 GPH	(1.13-11.3 LPH)
6.0P	0.6-6.0 GPH	(2.27-22.7 LPH)
15P	1.5-15.0 GPH	(5.68-56.8 LPH)
20P	2.0-20.0 GPH	(7.57-75.7 LPH)

Dual pump configurations available.

dynaBLEND® MODEL EXAMPLE:

L6-1800-6.0P fits applications with 180-1800 GPH dilution water and 0.6-6.0 GPH polymer

WATER SUPPLY PRESSURE

Water supply must be able to provide the maximum flow rate at 35-50 psi (240-345 kPa) greater than the pressure at point of use.

OPERATING PRESSURE

100 psi maximum (689 kPa)

DIMENSIONS

24" D x 24" W x 68" H
(61cm x 61cm x 173cm)

WEIGHT

Series L4-P: 250 lbs. (114 kg)
Series L6-P: 275 lbs. (125 kg)

POWER REQUIREMENTS

Single phase 115 VAC standard

series **L8-P / L12-P** specifications

The L8-P / L12-P Series dynaBLEND® include all features available throughout the line but in larger capacities.

L8-P / L12-P dynaBLENDs are designed to provide the highest standard water and polymer flow rates available on the market.

BACK VIEW

SERIES	DILUTION WATER	
L8-6000-	600- 6000 GPH	(2270-22700 LPH)
L8-9000-	900- 9000 GPH	(3400-34000 LPH)
L12-12000-	1200-12000 GPH	(4540-45400 LPH)
L12-21000-	2100-21000 GPH	(7950-79500 LPH)

PUMP	POLYMER RANGE	
15P	1.5-15 GPH	(5.7-57.0 LPH)
20P	2.0-20 GPH	(7.6-76.0 LPH)
25P	2.5-25 GPH	(9.5-95.0 LPH)
35P	3.5-35 GPH	(13.3-133.0 LPH)
50P	5.0-50 GPH	(18.9-189.0 LPH)
75P	7.5-75 GPH	(28.4-284.0 LPH)
110P	11-110 GPH	(41.6-416.0 LPH)
300P	30-300 GPH	(113.5-1135.0 LPH)

Dual pump configurations available.

dynaBLEND® MODEL EXAMPLE:

L8-6000-75P fits applications with 600-6000 GPH dilution water and 3.75-75 GPH polymer

WATER SUPPLY PRESSURE

Water supply must be able to provide the maximum flow rate at 35-50 psi (240-345 kPa) greater than the pressure at point of use.

OPERATING PRESSURE

100 psi maximum (689 kPa)

DIMENSIONS

36" D x 43" W x 68" H
(92cm x 109cm x 173cm)

WEIGHT

Series L8-P: 525 lbs. (238 kg)
Series L12-P: 600 lbs. (273 kg)

POWER REQUIREMENTS

Single phase 115 VAC standard

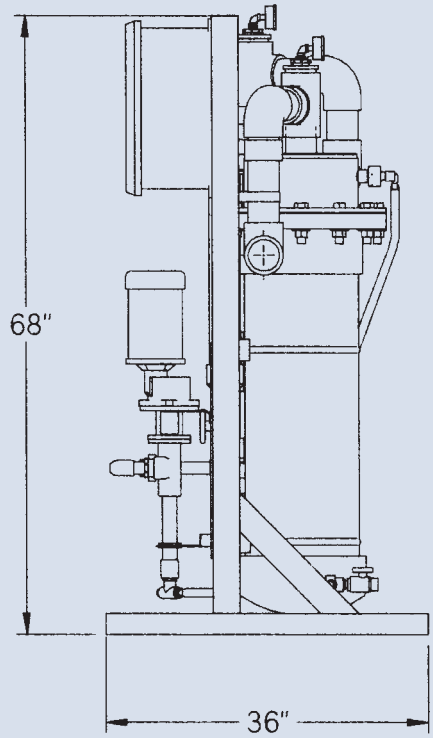

SIDE VIEW

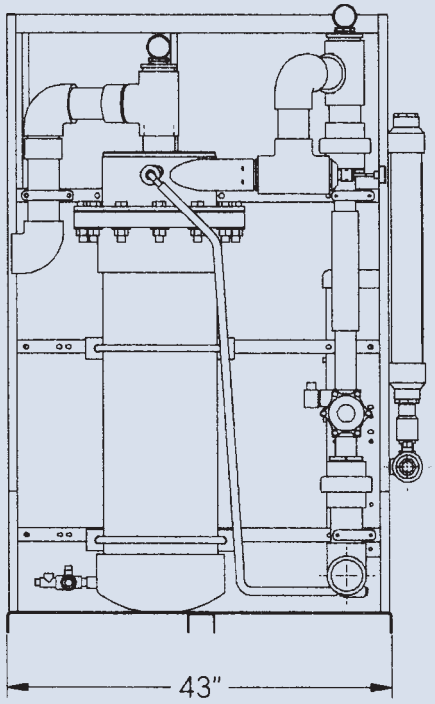

BACK VIEW

take **Control**

Because controls are an integral part of every dynaBLEND® system, Fluid Dynamics has developed the widest range of standard control panels available. Beginning with a simple discrete controller, through micro-processor based controllers, all the way up to versatile PLC based systems with touch screen interfaces and a variety of communication options. There is likely to be a pre-engineered system to meet your needs. If additional features are required, Fluid Dynamics' electrical and software engineers and UL panel shop will develop a custom solution for your application.

Control and **Instrument Options**

Control Panel Options are shown on pages 10 and 11. Some of the available features include or allow the selection of accessories or options. These options are described below.

PUMP CONTROL

Diaphragm Pumps can be furnished with manual or automatic speed control. Automatic control models accept a 4-20 mADC pacing signal which varies the speed of the pump. Pacing feature is available on all control levels except Control Level 1.

Progressing Cavity Pumps are offered in manual or automatic models. Automatic models accept a 4-20 mADC pacing signal, which varies the speed of the pump. Tachometer feedback is an option available on PC pumps. Pump speed is interpolated as an indication of polymer flow where budgetary constraints do not allow more sophisticated polymer flow measurement. Pacing feature is available on all control levels except Control Level 1.

WATER MEASUREMENT

Differential Pressure Switch—A non-quantitative device used to sense the loss of water flow. Alarm and system shutdown is provided on loss of water flow. This feature is standard on Control Level 3 and optional on Control Levels 4, 5 and 6.

Rotometer—A quantitative device which allows water flow rate to be observed locally. Standard on all units unless a higher level control is selected.

Turbine Flow Meter—A quantitative device which measures water flow and provides a signal to indicate the water flow rate. This signal is used to display the flow rate and/or as a part of the ratio control feature. This feature is standard for Control Levels 4, 5 and 6 and is optional on Control Level 3.

Magnetic Flow Meter—An alternative to the Turbine Flow Meter available to meet customer preferences. This feature is

POLYMER MEASUREMENT

Calibration Column—A pump draw down cylinder is standard on all systems utilizing a progressing cavity pump and optional for all systems utilizing a diaphragm pump.

Thermal Flow Sensor—A non-quantitative device used to sense loss of polymer flow. Alarm and shutdown is provided when loss of polymer flow is sensed. This feature is optional on Control Levels 3, 4 and 5 and standard on Control Level 6.

Mass Flow Meter—A quantitative device which is a highly sensitive instrument used to measure the flow of non-conductive and viscous liquids such as polymer, accurately, even at very low flows. The device provides a signal proportional to flow which may be used to display polymer flow rate and/or as the basis of the dynaBLEND ratio control feature with the highest accuracy. This option is available only on Control Levels 4, 5 and 6. When this option is selected, the

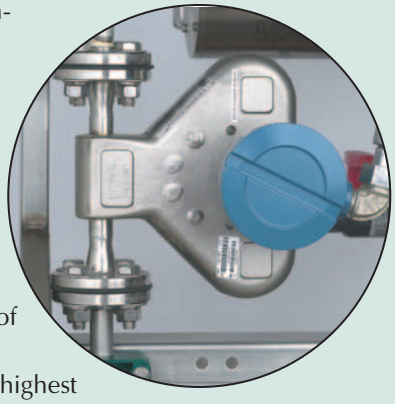

AUTO FLUSH

Automatically initiated flush cycle. Cycle time is adjustable. Standard on Control Levels 4, 5 and 6; optional on Control Level 3.

DRY POLYMER PREPARATION UNITS

Available from Fluid Dynamics Inc.—request the dynaJET™ brochure.

your choice of pre-engineered

CONTROL Configurations

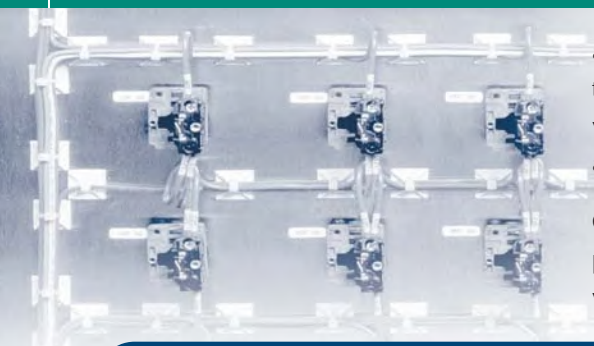

Fluid Dynamics Inc. offers dyna**BLEND**® Liquid Polymer Blending Systems with a variety of pre-engineered control configurations, including local, remote, microprocessor and PLC. All control enclosures are rated NEMA 4X. Standard power is 115 VAC. UL Certification is optional.

All units include manual polymer pump rate control. Control Levels 2 and higher are designed to accept a pacing signal for remote speed adjustment of the polymer feed pump. All progressing cavity pumps are provided with a variable speed drive with local rate indication. Diaphragm pumps feature both adjustable stroke length (manual only) and adjustable stroke speed control.

Control Levels 3, 4 and 5 are available with an optional alarm indicating loss of polymer flow, derived from a thermal flow sensor. This option is not available with pumps operating below 0.2 gph. This feature is included on Control Level 6.

CONTROL LEVELS 1 through 3

Control Levels 1 through 3 are discrete control systems using relay logic and isolated contact I/O.

Level 1

- LOCAL-OFF-REMOTE Selector Switch
- RUN Indicating Light
- Manual Pump Flow Rate Adjustment
- Alarms: None
- Inputs: Remote ON-OFF (Discrete)
- Outputs: Running (Discrete)
  Remote Mode (Discrete)

Level 2

Level 2 is identical to Level 1 except with one added input:

- Inputs: Pacing of Metering Pump (4-20 mADC)

Note: The ability to pace the metering pump is based on pump/drive selection.

Level 3

- LOCAL-OFF-REMOTE Selector Switch
- RUN Indicating Light
- Manual Pump Flow Rate Adjustment
- Alarms: Low Water Differential Pressure
- Inputs: Remote ON-OFF (Discrete)
  Pacing of Metering Pump (4-20 mADC)
- Outputs: Running (Discrete)
  Remote Mode (Discrete)
  Low Water Diff. Press. Alarm (Discrete)

Option — AUTO FLUSH can be added to Level 3 controls.

CONTROL LEVEL 4

Control Level 4 includes a Microprocessor based ratio control device capable of maintaining a precise solution concentration while following the manually adjusted dilution water flow rate.

- Microprocessor Control with Touchpad Input
- Ratio Control of Polymer to Dilution Water *
- LOCAL-OFF-REMOTE Selector Switch
- Running Indication
- Pump Rate Indication
- Water Rate Indication
- Solution Concentration Indication
- Auto Flush
- Alarm: Low Water Flow
- Inputs: Remote On-Off (Discrete)
  Pacing of Metering Pump (4-20 mADC)
- Outputs: Running (Discrete)
  Auto Flush Mode (Discrete)
  Low Water Flow Alarm (Discrete)
  Polymer Pump Rate (4-20 mADC)

* When the selector switch is in "LOCAL" the polymer feed follows the water flow to maintain a fixed concentration. A typical application is to fill a tank with a polymer solution, which is then delivered to multiple points of use.

When the selector switch is in "REMOTE" the polymer pump follows a remote control (demand) signal. Dilution water is manually adjusted. A typical application for is direct injection of diluted polymer solution to a single feed point.

CONTROL LEVEL 5

Control Level 5 includes a Microprocessor based ratio control package to maintain a precise polymer solution concentration. The device is configurable, through a local touchpad, to allow either water or polymer to follow a 4-20 mADC pacing signal. The non-paced flow is controlled automatically to maintain the desired solution concentration. Polymer solution concentration may be adjusted locally or by a second remote 4-20 mADC signal. When operating in a fully automatic mode, water flow is controlled automatically through the use of an integral linear actuated variable orifice (LAVO).

- Microprocessor Control with Touchpad Input
- Ratio Control of Polymer Solution Concentration
  - Local Input Through Touchpad
  - In Response to a Remote Signal
- LOCAL-OFF-REMOTE Selector Switch
- Running Indication
- Pump Rate Indication
- Water Rate Indication
- Solution Concentration Indication
- Auto Flush
- Alarms: Low Water Flow
  Solution Concentration FAULT [2]
- Inputs: Pacing Signal (4-20 mADC) [1]
  Solution Concentration (4-20 mADC) [1, 3]
  Remote On-Off (Discrete)
- Outputs: Running (Discrete)
  Remote Mode (Discrete)
  Auto Flush Mode (Discrete)
  Common Alarm (Discrete)
  Polymer Pump Rate (4-20 mADC)

[1] The primary 4-20 mADC pacing signal can drive either water or polymer flow rate as master. A second 4-20 mADC signal is used to adjust the solution concentration.

[2] A solution concentration FAULT is an indication of insufficient dilution water to satisfy concentration requirement.

[3] This input is separate from the pacing signal.

CONTROL LEVEL 6

Control Level 6 incorporates a PLC with a touch screen interface to maintain precise control of polymer solution concentration and flow rate. The system is configurable, through the integral touch screen to select either water or polymer to follow a 4-20 mADC pacing signal. The non-paced flow is controlled automatically to maintain the desired solution concentration. Polymer solution concentration may be adjusted locally or by a second remote 4-20 mADC signal. When operating in a fully automatic mode, water flow is controlled automatically through the use of an integral linear actuated variable orifice (LAVO).

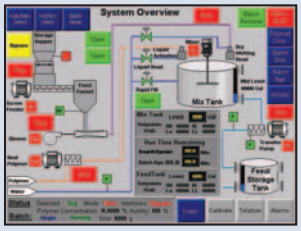

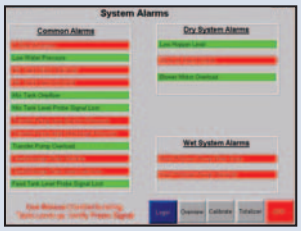

- PLC Control with Touch Screen Interface
- Ratio Control of Polymer Solution Concentration
  - Local Input Through Touch Screen
  - In Response to a Remote Signal
- LOCAL-OFF-REMOTE Selection (Touch Screen)
- Running Indication
- Pump Rate Indication
- Water Rate Indication
- Solution Concentration Indication
- Auto Flush
- Alarms: Low Water Flow (Adjustable Set Point)
  No Polymer Flow (Thermal Flow Sensor)
  Solution Concentration FAULT [2]
- Inputs: Pacing Signal (4-20 mADC) [1]
  Solution Concentration (4-20 mADC) [1, 3]
  Remote On-Off (Discrete)
- Outputs: Running (Discrete)
  Remote Mode (Discrete)
  Auto Flush Mode (Discrete)
  Common Alarm (Discrete)
  Solution Flow Rate (4-20 mADC)
  Polymer Pump Rate (4-20 mADC)

Distributed By:

Fluid Dynamics Products:

dynaBLEND®
Liquid Polymer Blending System

dynaBLEND®
Dry Polymer Preparation System

dynaJET™
Dry Polymer Preparation System

Fluid Dynamics INC.

Fluid Dynamics, Inc. • 3360 Mitchell Lane, Suite A
Boulder, CO 80301 • Toll Free: (888) 530-7300
Phone: (303) 530-7300 • Fax (303) 530-7754

The information contained herein relative to data, dimensions and recommendations as to size, power and assembly are for purpose of estimation only. These values should not be assumed to be universally applicable to specific design problems. Particular designs, installations and plants may call for specific requirements. Consult Fluid Dynamics, Inc. for exact recommendations or specific needs. Patent #4701055.
Other patents may apply.

© Copyright 2006
PN #ZLF107001

www.dynablend.com

PX4

Original™ Series **PLASTIC** Pumps

EOM

Engineering
Operation &
Maintenance

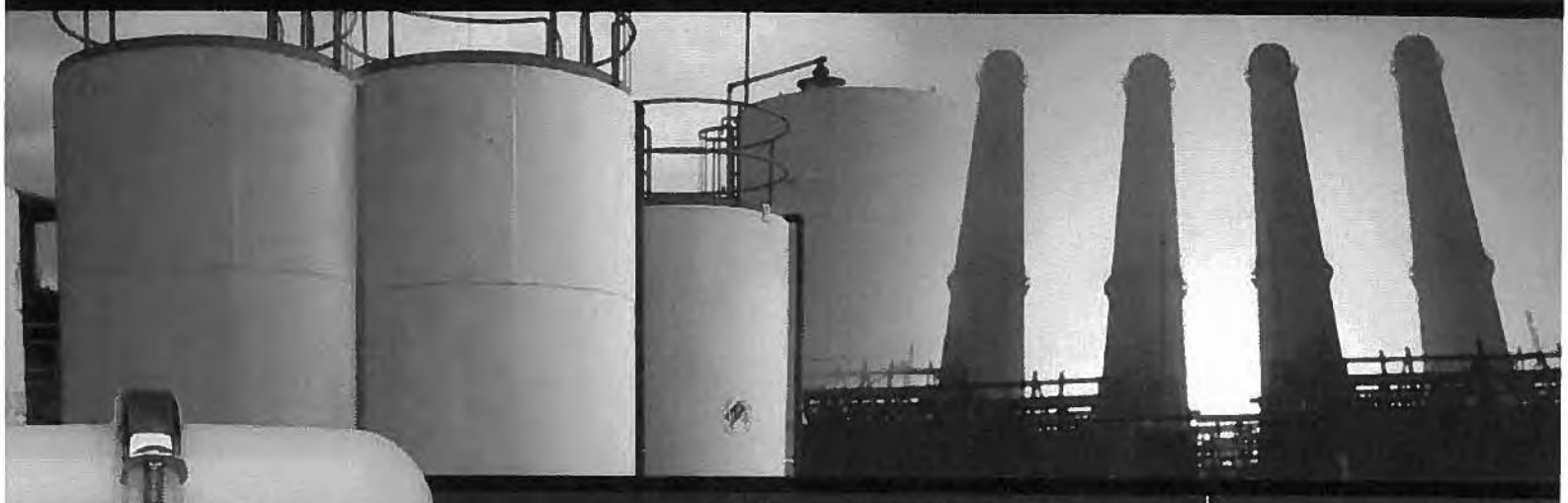

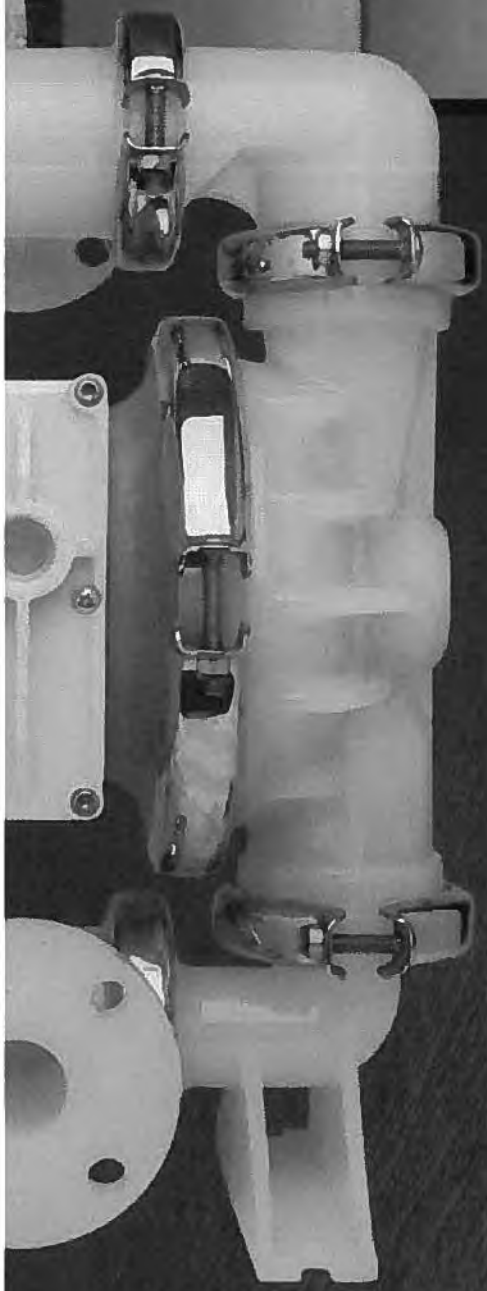

Simplify your process

PRO-FLO®
PROGRESSIVE PUMP TECHNOLOGY

PRO-FLO™ X
PROGRESSIVE PUMP TECHNOLOGY

CE

WILDEN®
A DOVER COMPANY

WIL-10161-E-02
TO REPLACE WIL-10161-E-01

DIMENSIONAL DRAWINGS

PX4 Plastic

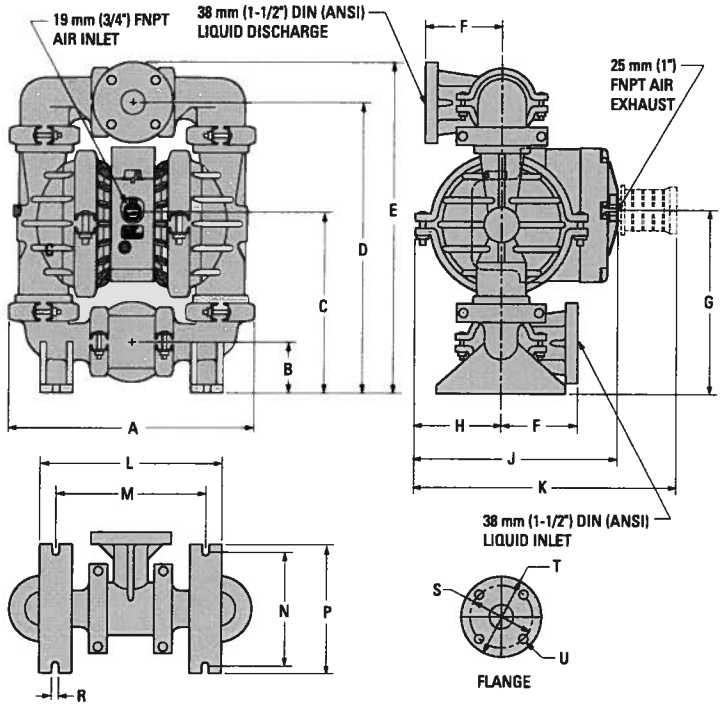

DIMENSIONS

ITEM	METRIC (mm)	STANDARD (inch)
A	394	15.5
B	79	3.1
C	287	11.3
D	465	18.3
E	528	20.8
F	122	4.8
G	295	11.6
H	137	5.4
J	320	12.6
K	411	16.2
L	287	11.3
M	236	9.3
N	180	7.1
P	204	8.0
R	10	.4
DIN FLANGE		
S	109 DIA.	4.3 DIA.
T	150 DIA.	5.9 DIA.
U	18 DIA.	.7 DIA.
ANSI FLANGE		
S	99 DIA.	3.9 DIA.
T	127 DIA.	5.0 DIA.
U	15 DIA.	.6 DIA.

DIMENSIONAL DRAWINGS

P4 Metal

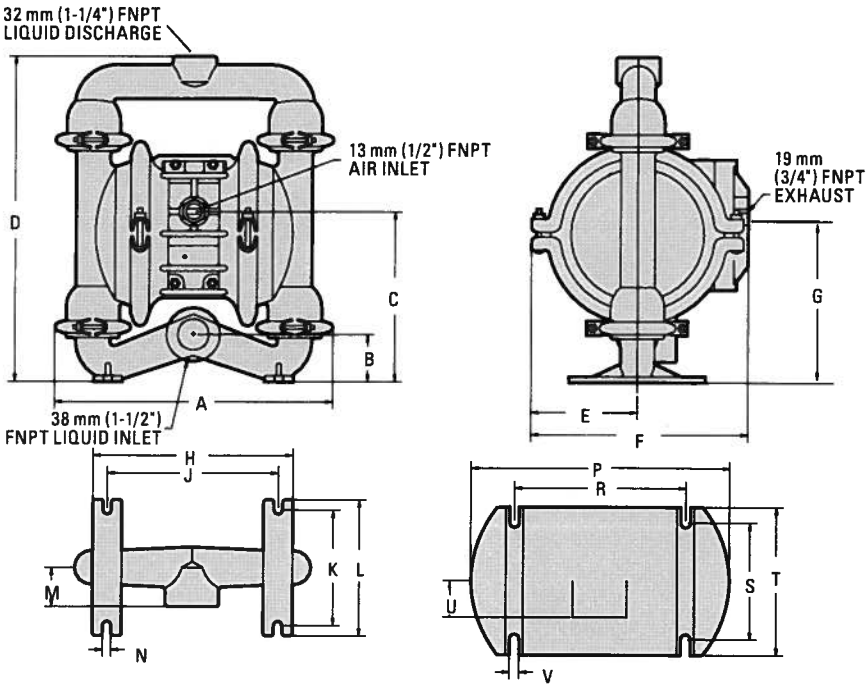

FOOTED BASE FOR STAINLESS STEEL & ALLOY C MODELS

BASE FOR ALUMINUM & CAST IRON MODELS

DIMENSIONS

ITEM	METRIC (mm)	STANDARD (inch)
A	368	14.5
B	64	2.5
C	206	8.1
D	429	16.9
E	147	5.8
F	308	12.1
G	211	8.3
H	262	10.3
J	224	8.8
K	152	6.0
L	178	7.0
M	51	2.0
N	10	0.4
P	335	13.2
R	224	8.8
S	135	5.3
T	196	7.7
U	48	1.9
V	13	0.5

P4 Metal Saniflo[FDA]

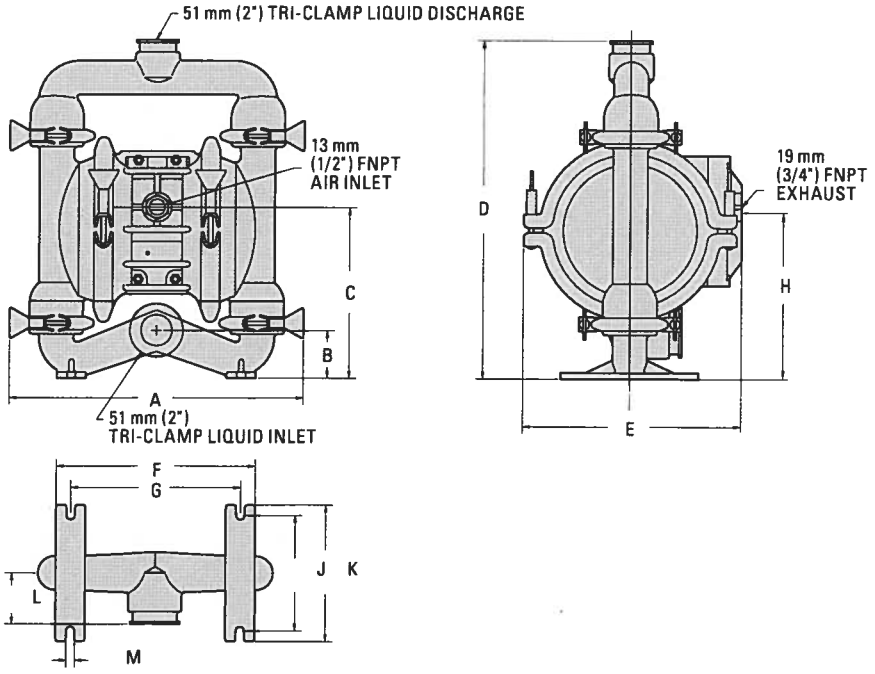

DIMENSIONS

ITEM	METRIC (mm)	STANDARD (inch)
A	389	15.3
B	64	2.5
C	206	8.1
D	442	17.4
E	308	12.1
F	262	10.3
G	224	8.8
H	211	8.3
J	152	6.0
K	178	7.0
L	66	2.6
M	10	0.4

PX20

Original™ Series **METAL** Pumps

EOM

Engineering
Operation &
Maintenance

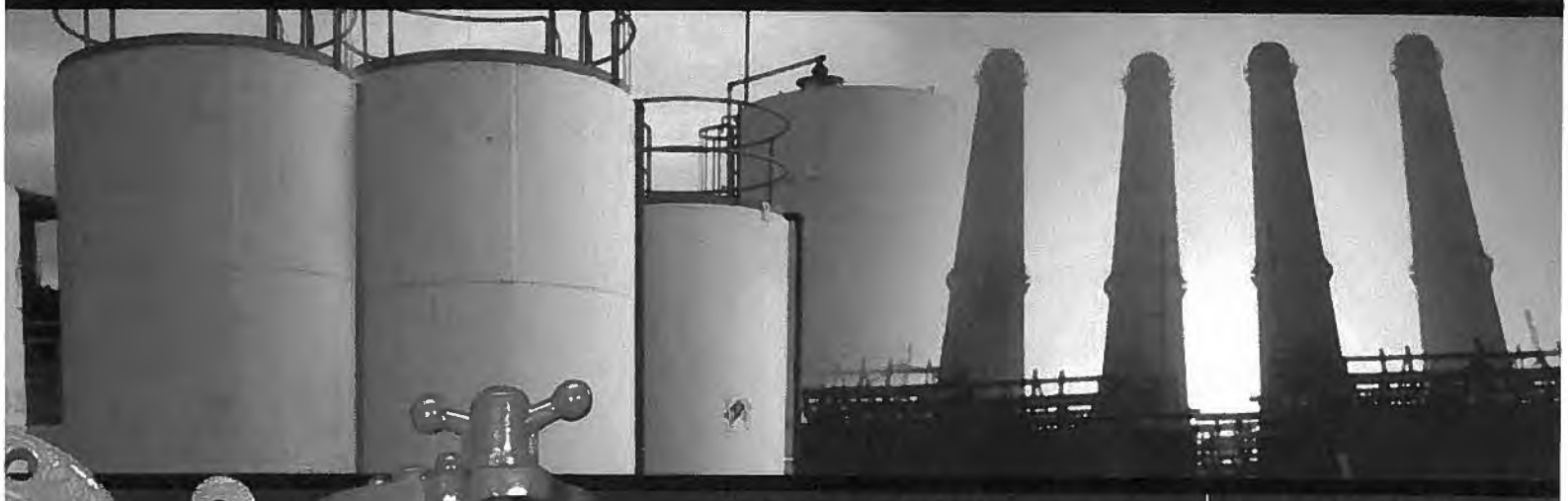

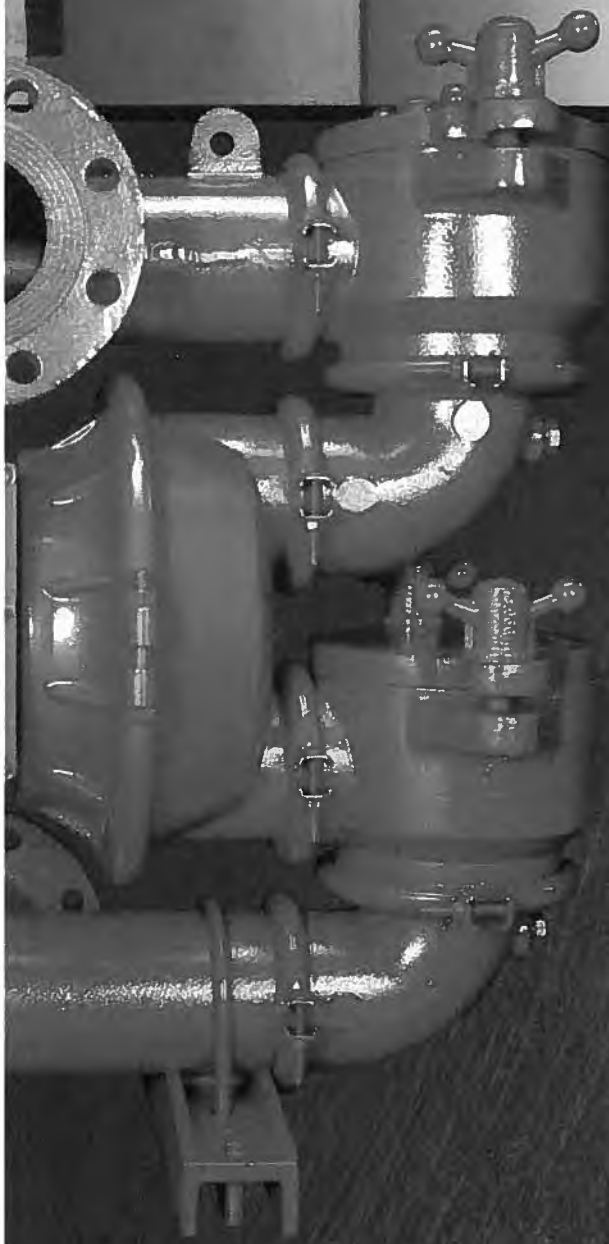

Simplify your process

PRO-FLO™ X
PROGRESSIVE PUMP TECHNOLOGY

CE

WILDEN®
A DOVER COMPANY

WIL-10340-E-03
TO REPLACE WIL-10340-E-02

DIMENSIONAL DRAWINGS

PX20 Original™ Metal

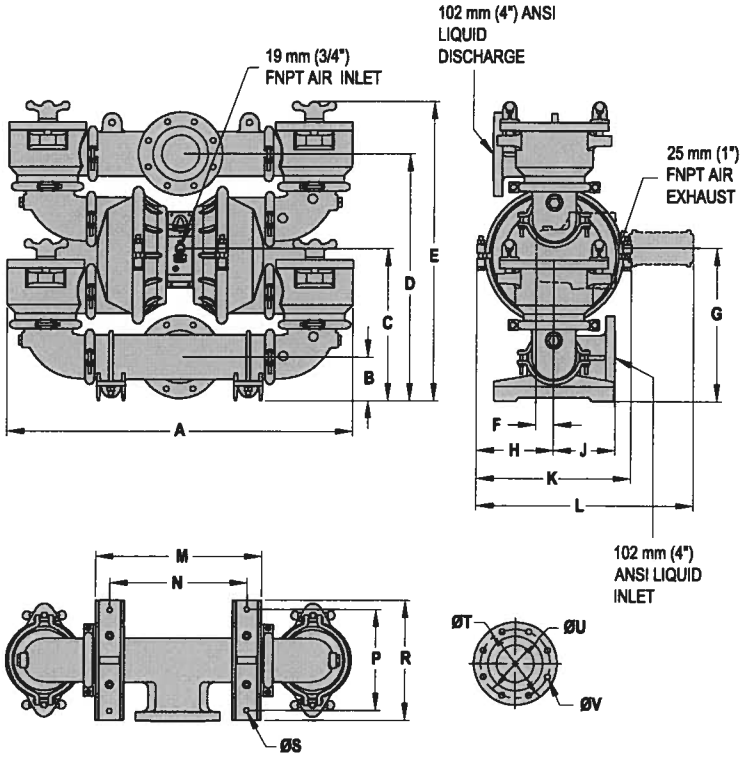

DIMENSIONS

ITEM	METRIC (mm)	STANDARD (inch)
A	950	37.4
B	119	4.7
C	419	16.5
D	681	26.8
E	826	32.5
F	48	1.9
G	424	16.7
H	213	8.4
J	170	6.7
K	424	16.7
L	597	23.5
M	455	17.9
N	376	14.8
P	279	11
R	333	13.1
ANSI FLANGE		
S	15 DIA.	0.6
T	231 DIA.	9.1 DIA.
U	191 DIA.	7.5 DIA.

APPENDIX C
RESPONSE TO COMMENTS

Annotated Response to Comments

Phase II Work Plan for AP-5 Solids Removal,
Henderson Nevada, dated December 24, 2014
NDEP's Comments Provided February 19, 2015

Comment No.	**Comment** (NDEP, February 19, 2015)	**Response** (Tetra Tech, March 13, 2015)
1.	**Section 1.1 Purpose and Objectives** Within the description of "Step 2" is referenced NPDES Permit NV0023060. It is our understanding that the Permit will need to be updated if GWETS equipment is modified and/or another source is added to the GWETS system. Therefore, to be "consistent with NPDES Permit NV0023060" the permit will need to be updated and the verbiage within Section 1.1 should reflect this and could possibly reference Section 3.5.1 for clarity.	Section 1.1 of the Work Plan was modified to state that the NPDES permit will require modification, and a reference to Section 3.5.1 was added to Section 1.1.

Comment No.	Comment (NDEP, February 19, 2015)	Response (Tetra Tech, March 13, 2015)
2.	**Section 1.2 Background** Within this section is a description of the remaining material in AP-5. Part of this residual material is described as "partially cemented, white granular crystals". The reader assumes, in the context of this document, that this material is totally perchlorate. It is advised that a chemical analysis of the "white crystals" be referenced in this section. Are other chemical or elemental substances, especially hexavalent chromium, intermixed in the AP-5 residuals that would not be removed during the Step 2 Solids Treatment or the GWETS GW-11 treatment and could therefore, create a non-permitted discharge of a substance(s) into the Las Vegas Wash? If this design is proceeding under the <u>assumption</u> that there are no other potentially detrimental substances in AP-5 (justified by the fact that AP-5 solids were previously treated by the GWETS system), then this assumption should be specifically listed in Section 3.6 Design Assumptions. Also, the assumption appears to be made that the "partially cemented" nature of the solid material can be readily dispersed into a slurry for removal. To what extent has the past flushing program or subsequent testing indicated the ability to generate a slurry from the partially cemented solid material?	No separate samples of the layers were collected during the sampling of AP-5. Samples from the two layers were composited before analysis. A description of the sampling program was added to Section 1.2. Because the "partially cemented, white granular crystals" were included in the composite samples, substances in that layer would be present in the analysis for the composite sample. Section 3.6 was modified to state the assumption that no detrimental substances were anticipated, and that discharge water chemistry will be evaluated further during detailed design. The "partially cemented, white granular crystals" will either dissolve or be incorporated into the slurry while the solids are being pumped from the pond. Based upon Tetra Tech's review of the data presented in ENVIRON's Solids Characterization Report (ENVIRON 2014) it is expected that the crystals are salt crystals that will dissolve in water. During the past flushing program, the fine-grained material overlying the crystals likely prevented dissolution of the crystals. Once the overlying layer is removed, water will mix with the crystals increasing the likelihood of the crystals dissolving. Even without dissolving, the crystals should be readily mixed in the slurry and pumped. This likelihood is evident from the "pockets" within the pond where suction piping has created voids through removal of both layers of solids.

Comment No.	Comment (NDEP, February 19, 2015)	Response (Tetra Tech, March 13, 2015)
3.	**Section 3.6.2 Treatment of Solids Removed from AP-5 Second bullet item** in this Section - "AP-5 slurry from the storage tank will be mixed with Stabilized Lake Mead Water at a water to slurry ratio of up to 3:1". It is unclear from this bullet point if the intent is to bring the slurry up to a water/solids ratio of 3:1, or if the slurry itself (already at a 3 to 1 ratio) will be diluted with a 3 to 1 ratio giving a water/ solids ratio of 9 to 1. The NDEP suggest a table with total perchlorate mass and other potential chemical and elemental substance mass, total weight, volume and density of the AP-5 dry solids based on previous data obtained from the AP-5. The table should also include the total Stabilized Lake Mead Water volume that is required to get water to slurry ratio. The information of this table should be the base for the new tank size and design. If the final slurry of new tank is different from the information of the slurry out of the AP-5, this information of the slurry in new tank should be estimated and listed in new table. The Work Plan should have appropriate design to protect piping from pond to new tank and treatment plant and containment for leaks.	The intent is to bring the water to solids ratio between 2:1 and 3:1 while pumping the solids from the pond to the storage tank. An additional amount of water in the range of 2:1 to 3:1 will be added during the process of removing perchlorate from the solids. The total ratio of water to solids is expected to be no greater than 6:1. Corresponding changes to the Work Plan include: • A calculation to show the amounts of solids and water, and the total volume. • Section 3.6.2, fourth bullet, was rephrased and a reference was added to new Table 3-2 in the second bullet. • The title of existing Table 3-2 was changed to 3-3. • The Work Plan was modified to describe the containment system for the pipelines. This was addressed in section 4.1.2 – Removal of AP-5 Solids Process Equipment, by adding a new section titled, 4.1.2.3 Pipelines.

Comment No.	Comment (NDEP, February 19, 2015)	Response (Tetra Tech, March 13, 2015)
	Third bullet item in this Section – "Dewatered solids resulting from washing and dewatering can be managed as non-hazardous waste". "Washing and dewatering" of the solids is merely diluting the contaminants in the solids and will never fully achieve a total elimination of the perchlorate. What level of residual perchlorate in the solids will be acceptable to the receiver of these solids for disposal? This will dictate the amount of water used for dilution and consequently the amount of water sent to GW-11, and ultimately the additional water to be processed by GWETS. Has bench testing been performed to determine the amount of perchlorate in the slurry and the amount of rinse water necessary to achieve the desired contaminant level in the solids? If this information is available, it should be referenced in this document along with the residual perchlorate levels allowed for disposal of the solids.	The process is a washing of the solids. Water is added, the slurry is mixed, and the water is separated from the solids. Residual perchlorate is removed from the solids because the perchlorate solids are soluble and will dissolve into the water. Tetra Tech will perform the same testing as the ENVIRON sampling – DOT/UN testing (DEKRA 2014). Bench testing was performed by Tetra Tech and a description was added to the Work Plan. The bench testing was able to reach a concentration of 250 mg/kg in the solids. This level of perchlorate is low enough to meet UN/DOT requirements. This is described in section 4.2.1 Treatment of Solids Removed From AP-5, Process Description.
	Seventh bullet item in this Section – "The water discharged from the thickener to GW-11 is anticipated to have a total suspended solids (TSS) content of less than 10 mg/L". Has bench testing been performed to confirm this data? If so, what time period is required to achieve these TSS levels from the thickener effluent? This time period will dictate batch run times and total timelines for processing the AP-5 slurry.	The anticipated TSS content is meant to imply that significant additional solids will not be added to GW-11; it is not a design criterion. The supernatant from the bench testing was not analyzed. In addition, this testing did not evaluate the settling rate for the solids. Due to limitations on FBR loading, the solids mixing and separation process is limited to one batch per day. This means that there will be a settling period of up to approximately 4 to 6 hours. In the bench testing performed, the solids settled to a clear supernatant in less than an hour. It is therefore estimated that the solids will easily settle to allow decanting of the water during the processing of one batch per day.

Comment No.	Comment (NDEP, February 19, 2015)	Response (Tetra Tech, March 13, 2015)
4.	**Section 4.1.2.1 AP-5 Submersible Slurry Pump** The "vendor information for an applicable Toyo pump" has not been provided in the Appendix.	Please see the attached Toyo pump specification.
5.	**Section 4.2.1.3 New Storage Tank with Mixing System** Does the new tank have a roof?	No, the tank is open top.
	The slurry will be significantly heavier than pure water and a worst case density should be calculated. The tank vendor should provide calculations demonstrating that the tank is structurally capable of handling the additional loading from the slurry.	These calculations will be performed as part of the final design.
	Has the required slurry recirculation volume / pressure been determined to keep the slurry in the storage tank in suspension? This will dictate the size of the required pump(s) for the slurry "mixing". Calculations for the pump(s) requirements and specification for these pump(s) should be included in the Appendix.	Yes. Mixing system vendors have been contacted and they performed preliminary calculations. These calculations will be confirmed as part of the final design.
	The Work Plan should also consider extra pumps and back-up power for recirculation pumps.	A backup pump was provided in the preliminary design. However, backup power was not supplied. In the event of a power failure, the mixing system will stop, but it is not anticipated that solids will compact in the tank during a power outage. To ensure that solids do not block the suction piping, piping and valves are proposed to allow Stabilized Lake Mead Water to be used to backflush the suction piping into the tank to clear any blockage of the suction pipe. Text has been added to the Work Plan noting that a contingency plan will be prepared for the Project to address unexpected events, including a long-term power outage.

Comment No.	Comment (NDEP, February 19, 2015)	Response (Tetra Tech, March 13, 2015)
6.	**Section 4.2.1 Process Description** The process description doesn't seem consistent with our understanding on the method of reduction of perchlorate in the slurry. The description indicates that the diluted mixture is "recirculated" until the perchlorate is reduced to "an acceptable level". We believe a more clear description would be that *slurry will be diluted with Stabilized Lake Mead Water at a ratio of 3 to1, then pumped to the thickener where solids are allowed to settle and the clarified effluent sent to GW-11 pond*. If this is done in batch mode, then *after the clarified liquids are drawn off, Stabilized Lake Mead Water is added and the process repeated as required to reduce the remaining concentrations of perchlorate in the slurry until the solids meet acceptable disposal requirements.*	The suggested revised language was added to the Work Plan.
7.	**Section 4.2.2.2 Storage Tank for Decontaminated Sludge** The 8,200 gallon capacity does not match the volume listed in Table 4-3.	The volume in the text is correct. Table 4-3 was revised.
8.	**Section 4.2.2.4 Pumps** There will be several pumps involved in the slurry treatment process. It is suggested that they are listed individually by their role in the process and their sizing requirements (and associated calculations or assumptions) included accordingly. This section does not make it clear what "process water" is being referenced and what pumps will be required to accommodate these. This section does not reference the pumps listed in the Appendices or state where they are used in the "Treatment of Solids" process.	The Work Plan was expanded to list each process pump separately, the process water pumped by each pump, and a reference to the pump model with additional information provided in the appendices.

Comment No.	Comment (NDEP, February 19, 2015)	Response (Tetra Tech, March 13, 2015)
9.	**Section 4.3.1 GWETS Operation Impacts and Modifications** The inputs used for the calculation of Table 3-2 must match the information of the final slurry in new tank. Table 3-2 only considered the perchlorate. The NERT should consider other potential chemical and elemental substances if they exist in the AP-5.	Table 3-3 (previously Table 3-2) was expanded to include chlorate and nitrate. Please see added footnote to Section 4.3.1.1.
10.	**Section 5 Start-Up, Commissioning, and Operation** The NERT should update the GWETS Operational Manuals, SOP and Health and Safety Plan for changing existing system and added equipment. The NERT should clarify who will perform the sampling and testing of the sludge during the treatment process to assure that the treated solids will comply with allowable disposal criteria.	A statement was added to the Work Plan noting that the NERT Perchlorate Treatment System Henderson, Nevada Operations Manual, relevant SOPs, and health and safety plans will be updated. The Work Plan was modified to state that the GWETS operator (ETI) is responsible for sampling and testing of the treated solids before disposal.
11.	**Section 6.4 Monthly Operation and Maintenance Summary** The operational cost is totaled at $4 million, not broken down to monthly cost, as the Section heading suggests. If a summary of the monthly costs is an important metric for the discussion, please provide it.	The section heading was changed to reflect the operating cost summary. Tetra Tech did not feel that the monthly costs were an important metric for the initial Work Plan, but will develop monthly costs during the final design phase.