BRC FIELD SAMPLING AND STANDARD OPERATING PROCEDURES

BMI COMMON AREAS
CLARK COUNTY, NEVADA

Prepared for:

Basic Remediation Company (BRC)
875 West Warm Springs Road
Henderson, Nevada 89015

Prepared by:

ERM-West, Inc.
2525 Natomas Park Drive, Suite 350
Sacramento, California 95833

MWH
3321 Power Inn Road, Suite 300
Sacramento, California 95826

DECEMBER 2008

I hereby certify that I am responsible for the services described in this document and for the preparation of this document. The services described in this document have been provided in a manner consistent with the current standards of the profession and to the best of my knowledge comply with all applicable federal, state and local statutes, regulations and ordinances. I hereby certify that all laboratory analytical data was generated by a laboratory certified by the NDEP for each constituent and media presented herein.

December 29, 2008

Dr. Ranajit Sahu, C.E.M. (No. EM-1699, Exp. 10/07/2009) Date
BRC Project Manager

FIELD SAMPLING AND STANDARD OPERATING PROCEDURES

BMI COMMON AREAS
CLARK COUNTY, NEVADA

1 INTRODUCTION

This document describes Field Sampling and Standard Operating Procedures for field tasks to be completed during Site investigation, groundwater monitoring and other field activities at the BMI Common Areas located in Clark County, Nevada (Site). The Standard Operating Procedures (SOPs) describe the methods used to collect environmental samples, measure aquifer properties, manage investigation-derived wastes, decontaminate equipment, and transport samples to laboratories for analysis. These procedures were developed as general descriptions of field methods that may be employed at various locations and stages of the field investigation. The purpose of the SOPs is to standardize and document field procedures and the collection of field data. In the event that the procedures outlined in the SOPs contradict Nevada regulations, the Nevada regulations shall take precedence.

Each SOP describes the purpose, equipment needs, proper field documentation forms, and methodology for a general field task. Each SOP is not intended to provide an all-inclusive discussion of all procedures. Specific problems may require the adaptation of existing equipment or design of new equipment. Such innovations shall be clearly described in the project-specific sampling plan and approved by the Project Manager, Basic Remediation Company (BRC) and the Nevada Division of Environmental Protection (NDEP). Specific Health and Safety procedures and information are presented in the project-specific Health and Safety Plan (BRC and MWH 2005). Field personnel will be familiar with the Health and Safety Plan prior to implementing field procedures. Specific quality assurance (QA) and quality control (QC) policies associated with the collection of environmental data for characterization activities at the Site are presented in the *BRC Quality Assurance Project Plan* (QAPP; BRC and ERM 2008).

Copies of field documentation forms referenced in the SOPs are included as Attachments to each specific SOP. Many SOPs are subdivided into more specific procedures, when necessary. Overall, the SOPs listed below provide general methods and procedures that may be changed due to variations in field conditions. Any changes in the procedures described in this SOP will be discussed with BRC and the lead agency NDEP prior to implementation in the field.

For remedial investigations, the National Contingency Plan (NCP; 40 Code of Federal Regulation [CFR] 300.430 (b)(8)(i)) requires lead agencies to develop sampling and analysis plans which provide a process for obtaining data of sufficient quality and quantity to satisfy data needs. Such sampling and analysis plans must include a Field Sampling Plan (FSP). Although not directly applicable, this project will follow this general guidance of the NCP. Additionally, the preparation of project and area-specific FSPs is set forth in the following U.S. Environmental Protection Agency (USEPA) guidance documents:

- USEPA. 1988. *Guidance for Conducting Remedial Investigations and Feasibility Studies Under CERCLA.*
- USEPA. 2002. *Guidance on Choosing a Sampling Design for Environmental Data Collection for Use in Developing a Quality Assurance Project Plan.*
- USEPA. 2006. *Guidance on Systematic Planning Using the Data Quality Objectives Process.*
- USEPA. 2007. *Guidance for Preparing Standard Operating Procedures (SOPs)*.

Specifically, USEPA 1988 Appendix B requires that an FSP contain the following:

1. Site background
2. Sampling objectives
3. Sample location and frequency
4. Sample designation
5. Sampling equipment and procedures
6. Sample handling and analysis

For this project, Items 5 and 6 are covered in this document and the BRC QAPP (BRC and ERM 2008). Separate sub-area Sampling and Analysis Plans will be prepared for each project sub-area. These Plans will contain Items 1 through 4 above. As such, this document is designed to contain SOPs that will be used on all project sub-areas, as needed. Thus, the sub-area Sampling and Analysis Plans will reference this document.

2 REFERENCES

Basic Remediation Company (BRC) and MWH. 2005. BRC Health and Safety Plan, BMI Common Areas, Clark County, Nevada. October.

Basic Remediation Company (BRC) and Environmental Resources Management (ERM). 2008. BRC Quality Assurance Project Plan. BMI Common Areas, Clark County, Nevada. April.

U.S. Environmental Protection Agency (USEPA). 1988. Guidance for Conducting Remedial Investigations and Feasibility Studies Under CERCLA. Interim Final. EPA/540/G-89/004. Office of Emergency and Remedial Response, Washington, DC. October.

U.S. Environmental Protection Agency (USEPA). 2002. Guidance on Choosing a Sampling Design for Environmental Data Collection for Use in Developing a Quality Assurance Project Plan. EPA QA/G-5S. Office of Environmental Information, Washington, DC. December.

U.S. Environmental Protection Agency (USEPA). 2006. Guidance on Systematic Planning Using the Data Quality Objectives Process. EPA QA/G-4. Office of Environmental Information, Washington, DC. February.

U.S. Environmental Protection Agency (USEPA). 2007. Guidance for Preparing Standard Operating Procedures (SOPs). EPA QA/G-6. EPA/600/B-07/001. Office of Environmental Information, Washington, DC. April.

LIST OF STANDARD OPERATING PROCEDURES

SOP-0	Quality Assurance and Quality Control for Submittals to the Nevada Division of Environmental Protection
SOP-1	Drilling Methods
SOP-2	Groundwater Monitoring Well Design
SOP-3	Groundwater Monitoring Well Development
SOP-4	Aquifer Testing Methods
SOP-5	Water Sampling and Field Measurements
SOP-6	Sample Management and Shipping
SOP-7	Soil Sampling
SOP-8	Trenching and Test Pitting
SOP-9	Surface Water and Sediment Sampling
SOP-10	Surveying
SOP-11	Cone Penetrometer Testing
SOP-12	Surface Soil Sampling for Asbestos
SOP-13	Operating and Calibration Procedures - Field Equipment
SOP-14	Field Documentation
SOP-15	Field Logbook
SOP-16	Flux Chamber Source Testing
SOP-17	Soil Logging
SOP-18	Soil Sampling for VOCs Using EnCore™ Samplers
SOP-19	Borehole Abandonment
SOP-20	Filter Pack and Well Screen Slot Size Determination
SOP-21	Monitoring Well Destruction
SOP-22	Installation of Temporary Monitoring Wells
SOP-23	Split Spoon Sampling
SOP-24	Wireline Coring
SOP-25	Shallow Hand Auger Sampling
SOP-26	Soil Grab Sampling
SOP-27	Stockpile Sampling
SOP-28	HydroPunch
SOP-29	Drum Sampling

LIST OF STANDARD OPERATING PROCEDURES

SOP-30	Field Analytical Procedure
SOP-31	Drilling Equipment Decontamination
SOP-32	X Ray Fluorescence (XRF) Analysis (REMOVED)
SOP-33	Wipe Sampling
SOP-34	Investigative Derived Waste (IDW) Management
SOP-35	Waste Sampling
SOP-36	Tank Sampling
SOP-37	Active Soil Gas Investigation
SOP-38	Radiation Field Screening
SOP-39	Photoionization Detector (PID) Screening Procedure
SOP-40	Data Review/Validation
SOP-41	Approach for Surface Soil Sampling
SOP-42	Subsurface Soil Sampling by Geoprobe™ Methods

APPENDICES

A NDEP Comments on the BRC Standard Operating Procedures and BRC's Response to Comments

BASIC REMEDIATION COMPANY
STANDARD OPERATING PROCEDURES
BMI COMMON AREAS
CLARK COUNTY, NEVADA

SOP-0

QUALITY ASSURANCE AND QUALITY CONTROL FOR SUBMITTALS TO THE NEVADA DIVISION OF ENVIRONMENTAL PROTECTION

STANDARD OPERATING PROCEDURES

SOP-0
QUALITY ASSURANCE AND QUALITY CONTROL FOR SUBMITTALS TO THE NEVADA DIVISION OF ENVIRONMENTAL PROTECTION

TABLE OF CONTENTS

Section **Page**

1.0 INTRODUCTION 1

2.0 CALCULATION REVIEW PROCEDURES 1

3.0 DRAWING AND DESIGN REVIEW PROCEDURES 2

4.0 REPORT REVIEW PROCEDURE 3

DISCLAIMER

THE FOLLOWING STANDARD OPERATING PROCEDURE PROVIDES GENERAL GUIDANCE FOR BRC CONTRACTORS FOR TECHNICAL ISSUES ADDRESSED DURING ENVIRONMENTAL SITE INVESTIGATION AND REMEDIATION ACTIVITIES. IT IS NOTED, HOWEVER, THAT EACH SITE IS UNIQUE AND THESE GUIDELINES ARE NOT A SUBSTITUTE FOR COMMON SENSE AND GOOD MANAGEMENT PRACTICES BASED ON PROFESSIONAL TRAINING AND EXPERIENCE. IN ADDITION, INDIVIDUAL CONTRACT TERMS MAY AFFECT THE IMPLEMENTATION OF THIS STANDARD OPERATING PROCEDURE. BRC CONTRACTORS RESERVE THE UNRESTRICTED RIGHT TO CHANGE, MODIFY OR NOT APPLY THESE GUIDELINES IN THEIR SOLE, COMPLETE, AND UNRESTRICTED DISCRETION TO MEET CERTAIN CIRCUMSTANCES, CONTRACTUAL REQUIREMENTS, SITE CONDITIONS, OR JOB REQUIREMENTS.

1.0 INTRODUCTION

The purpose of this Standard Operating Procedure (SOP) is to ensure that all reports, including figures, drawings, tables, and calculations, are of similar and acceptable quality. Report quality assurance and quality control (QA/QC) review is a critical part of the project reporting process. It is imperative that a thorough review be conducted to prevent errors in reporting or procedure shortcuts on the part of the preparer. Report review is also needed to ensure that the acceptance criteria for the project have been met.

It is Basic Remediation Company's (BRC) policy that all documents and deliverables (project designs, drawings, reports, calculations) receive appropriate review to assure both the company and the Nevada Division of Environmental Protection (NDEP) that standards are being met. The BRC QA/QC review process consists of independent, in-process reviews and technical document reviews. In addition, review meetings may be used at any stage of a project to provide key technical input.

All work must be carried out by experienced staff or appropriate training given to project staff. It is the responsibility of the BRC Project Manager to identify the technical requirements of the project and identify appropriately qualified staff to complete and review the work. The BRC Project Manager shall be responsible for overseeing all aspects of the review process. Three QA/QC review procedures are presented in this SOP: calculation review, drawing and design review, and report review.

2.0 CALCULATION REVIEW PROCEDURES

All calculations shall be checked by a qualified staff member with expertise in the area of interest. The staff member conducting the review is responsible for determining the level of review required. For simple projects, a self-check may be appropriate; however, all self-checks must be approved by the BRC Project Manager for each specific task. The review and validation of spreadsheets should be performed by someone other than the preparer, and a person conversant in the software application (for example, Microsoft® Excel).

Regardless of the level of review, the reviewer shall ensure that the requirements below have been met and that the outputs are reasonable. All checks must be documented.

In specifying checks and reviews, the following should be conducted:

- Review printed material against electronic material:

- Review formula locations, cell numbers, and ranges;
- Review formula documentation in equation table;
- Review formula syntax and order of operation, verifying against calculator (if necessary);
- Review final layout;
- Verify that all data has been correctly entered from its original source; and
- Verify that any formulae used are correct and that they run throughout the spreadsheet (if applicable).

3.0 DRAWING AND DESIGN REVIEW PROCEDURES

All drawings and designs shall be identified by job number in the title block. Numbering systems shall be developed by the BRC Project Manager, unless NDEP specifies an alternative. The preparation, review, and approval of drawings and designs shall be documented in the drawing title block. The person preparing the drawing or design shall identify the title, job, drawing or design number, scales, revision status, and author in the appropriate locations. The status of all drawings and designs shall be clearly shown.

All drawings and designs shall be reviewed by a senior staff member. At a minimum, drawing and design review should include the following:

- Review of all project drawings and designs to identify errors; conflicts between drawings, tables, and text; and omissions in detail, dimensions, and identification.

For larger or more complex tasks, drawing and design review may also include the following:

- A detailed check of the drawings and designs to ensure the accuracy of all dimensions, labeling, identification, and number systems and consistency with the calculations and other project documentation. This check will normally be conducted by the senior staff member who is undertaking the calculation review.

All drawings and designs reviewed shall be signed and dated by the reviewer and recorded in the project file.

4.0 REPORT REVIEW PROCEDURE

The BRC Project Manager shall be responsible for ensuring that reports have been properly prepared and reviewed before being submitted to NDEP. Draft and final versions of all documents submitted as formal project deliverables shall undergo technical review by experienced technical reviewers, other than the author, to independently review document copy and content, and check tables, data, and calculations. Technical or content review staff should have the appropriate experience for the document. Content review should examine document flow and organization, data interpretation and presentation, construction of conclusions and recommendations, and technical accuracy and completeness. An editorial or copy review is also recommended to maintain minimum quality standards. Copy review should include a review of grammar, spelling, sentence and paragraph structure, and formatting. Data in figures, tables, and text shall be compared to determine if values are consistent. Acronyms and references should be checked for completeness. The copy review shall be conducted by someone with specialized skills.

In addition, the primary author shall review the entire document for content and style consistency, particularly if there are multiple authors. The consultant's Project Manager shall review the document to determine if it meets the project scope of work. The presentation of all reports shall, as far as is practical, be in a standard format and shall be of a consistent format throughout the report. The consultant's Project Manager shall provide sign-off that the above requirements have been met for the document.

For some simple submittals, self-checks may be appropriate. However, self-checks must be approved by the BRC Project Manager for each specific task and the approval documented. The completed and signed review or equivalent documented check shall be held in the project file.

Documents should be technically and editorially reviewed for various elements, including the following:

- Format, style, and grammar;
- Consistency and completeness;
- Complete and correct references to tables, drawings, figures, and appendices;
- Calculations;
- Reference to the most current standards (*e.g.*, current federal risk assessment guidance);

- Technical correctness;
- Adherence to BRC and NDEP standards and procedures;
- Conformance to industry practice and/or applicable regulatory guidance;
- Pages are properly ordered and legible;
- Liability considerations are addressed;
- Conformance with BRC document style requirements;
- Consistency with requirements in the scope of work; and
- Appropriate/adequate justification for recommendations.

Each document submitted to NDEP must be stamped and signed by a Nevada Certified Environmental Manager (C.E.M.) and include a jurat (Ref: NAC 459.97285), the date on which the document was signed, the number of the certificate, and the date of expiration of the certificate. This stamp and signature shall be evidence that required reviews have been completed and that the document meets BRC standards and reasonable requirements.

Sign-off by team members who have completed quality checks on the document shall be included on a sheet behind the CEM jurat. In addition, the entire document (including calculations, drawings, and text) shall be checked to determine compliance with the NDEP's comments and BRC's responses, prior to submittal. Regulatory review comments, along with comment responses, shall be reviewed prior to submitting comment responses to NDEP. These comments and responses shall also be retained in the project file. In general, NDEP review comments and comment responses should be included in an Appendix in subsequent revisions of the document.

BASIC REMEDIATION COMPANY
STANDARD OPERATING PROCEDURES
BMI COMMON AREAS
CLARK COUNTY, NEVADA

SOP-01

DRILLING METHODS

STANDARD OPERATING PROCEDURES

SOP-1
DRILLING METHODS

TABLE OF CONTENTS

Section **Page**

1.0 INTRODUCTION 1

2.0 DEFINITIONS 2

3.0 RESPONSIBILITIES 3

4.0 DRILLING METHODS 3
- 4.1 Methods Without Circulating Fluids 4
  - 4.1.1 Augering 4
  - 4.1.2 Percussion Drilling 7
- 4.2 Methods With Circulating Fluids 10
  - 4.2.1 Rotary Drilling Methods 10
  - 4.2.2 Dual-Tube Percussion Drilling 14
  - 4.2.3 Suction Drilling 15

5.0 CONSIDERATIONS FOR SELECTION OF DRILLING METHODS 16
- 5.1 Drilling Objectives 16
- 5.2 Site Conditions 17
  - 5.2.1 Subsurface Conditions 17
  - 5.2.2 Surface Conditions 17
- 5.3 Waste Generation 18
- 5.4 BRC Preferences 18

DISCLAIMER

THE FOLLOWING STANDARD OPERATING PROCEDURE PROVIDES GENERAL GUIDANCE FOR BRC CONTRACTORS FOR TECHNICAL ISSUES ADDRESSED DURING ENVIRONMENTAL SITE INVESTIGATION AND REMEDIATION ACTIVITIES. IT IS NOTED, HOWEVER, THAT EACH SITE IS UNIQUE AND THESE GUIDELINES ARE NOT A SUBSTITUTE FOR COMMON SENSE AND GOOD MANAGEMENT PRACTICES BASED ON PROFESSIONAL TRAINING AND EXPERIENCE. IN ADDITION, INDIVIDUAL CONTRACT TERMS MAY AFFECT THE IMPLEMENTATION OF THIS STANDARD OPERATING PROCEDURE. BRC CONTRACTORS RESERVE THE UNRESTRICTED RIGHT TO CHANGE, MODIFY OR NOT APPLY THESE GUIDELINES IN THEIR SOLE, COMPLETE, AND UNRESTRICTED DISCRETION TO MEET CERTAIN CIRCUMSTANCES, CONTRACTUAL REQUIREMENTS, SITE CONDITIONS, OR JOB REQUIREMENTS.

1.0 INTRODUCTION

Drilling is a common activity associated with all phases of environmental investigations. A variety of drilling methods can be used to collect site data during investigations and studies, and to install vapor extraction or water wells associated with remedial actions, treatability studies, or pilot studies.

Field investigations usually require invasive activities to gather information for site evaluation. The investigation may require a borehole to facilitate the collection and subsequent analysis of soil and/or groundwater samples. The borehole is often converted into a well for evaluating vapor or groundwater conditions over a longer period of time. In addition to the collection of samples for analyses, other data, such as sediment or rock classification; the presence of contamination; geophysical, geotechnical, or physical parameters of the sediment or rock; and the occurrence of groundwater, can be obtained from boreholes.

To determine the most appropriate drilling method for investigations or studies, primary consideration must be given to obtaining samples that are representative of existing conditions and are valid for chemical analysis. The samples must not be contaminated or adversely affected by the drilling method.

Drilling associated with remedial actions, pilot studies, or treatability studies may include the installation of vapor or water extraction and/or injection wells. In selecting the most appropriate drilling method for these projects, primary consideration must be given to completion of a well that will perform as designed.

This Standard Operating Procedure (SOP) describes the principles of operation and the applicability and implementability of standard drilling methods used during field investigations. The purpose of this document is to aid in the selection of appropriate drilling methods for site-specific conditions. This SOP is intended to be used by the Project Manager (PM), Project Engineer (PE), Field Team Leader (FTL), and site hydrogeologist or geologist (of which a minimum of one must be a qualified Nevada Certified Environmental Manager [C.E.M.]) to develop an understanding of each drilling method sufficient to plan, schedule, and perform the activities associated with drilling.

This SOP focuses on methods and equipment that are readily available and typically applied. It is not intended to provide a comprehensive discussion of drilling methods. Two general drilling methods are discussed: (1) methods that do not use circulating fluids; and (2) methods requiring

the circulation of drilling fluids to transport cuttings to the surface. More specific drilling methods or techniques can be researched, as necessary, by contacting a drilling subcontractor and learning about the specific methodology that may be most beneficial to implement.

2.0 DEFINITIONS

Bailer	A cylindrical tool designed to remove material, both solid and liquid, from a well or borehole. A valve, which can be a ball or flap, at the bottom of the bailer retains the material in the bailer. There are four types of bailers: ball-valve, flat-valve, dart-valve, and the sand pump with rod plunger.
Cone Penetrometer	An instrument used to determine and evaluate subsurface conditions by measuring the ratio of cone tip resistance to sleeve friction, and then comparing that ratio to a standardized set of ratios. The cone penetrometer can be fitted with other instruments that are able to determine pore pressure (the presence of groundwater), to detect contamination and identify the contaminant, and to determine other physical parameters of the sediment. The cone penetrometer consists of a conical point attached to a drive rod of smaller diameter. Penetration of the cone into the formation forces the soil aside, creating a complex shear failure. The cone penetrometer is very sensitive to small differences in soil consistency.
Cuttings	As a borehole is drilled, the subsurface material displaced by drilling and brought to the surface.
Drilling Fluids or Muds	A water-based or air-based fluid used in the well drilling operation to remove cuttings from the borehole, to clean and cool the bit, to reduce friction between the drill string and the sides of the borehole, to stabilize borehole walls, and to seal the borehole.
Dual-Purpose Well	A well that can be used as both a monitoring and extraction or injection well.
Flight	An individual auger section, usually 5 feet in length.
Heaving Formation	Unconsolidated, saturated substrate encountered during drilling where the hydrostatic pressure of the formation is greater than the borehole pressure causing the sands to move up into the borehole, and frequently causing drilling or well installation complications. Clean water or drilling muds may need to be introduced into the borehole to minimize or eliminate the potential for heaving.

Kelly Bar	A hollow steel bar or pipe that is the main section of drill string to which the power is directly transmitted from the rotary table to rotate the drill pipe and bit. The cross section of the kelly is either square, hexagonal, or grooved. The kelly works up and down through drive bushings in the rotary table.
Pitch	The distance along the axis of an auger flight that it takes for the helix to make one complete 360-degree turn.
Rotary Table	A mechanical or hydraulic assembly that transmits rotational torque to the kelly, which is connected to the drill pipe and the bit. The rotary table has a hole in the center through which the kelly passes.
Split-Spoon Sampler	A thick-walled, typically 18-inch long steel tube split lengthwise and used to collect soil samples. The sampler is commonly lined with brass or stainless steel sample sleeves and is driven or pushed downhole by the drill rig to collect samples.
Thin-Walled Sampler	A sampling devise used to obtain undisturbed soil samples made from thin-wall tubing. The sampler is also known as a Shelby tube. The thin-wall sampler minimizes the most serious sources of disturbance: displacement and friction.

3.0 RESPONSIBILITIES

The **Project Manager** or **Task Leader** (a qualified Nevada C.E.M.) will select site-specific drilling methods, with input from the FTL and Site Hydrogeologist or Geologist, and will maintain close supervision of the activities and progress.

The **Site Hydrogeologist** selects site-specific drilling options and assists in the preparation of technical provisions of drilling procedures and details.

The **Field Team Leader** implements the selected drilling program and assists in the selection of drilling methods.

4.0 DRILLING METHODS

Drilling methods can be separated into two general types: techniques that use circulating fluids and techniques that do not use circulating fluids. The following section discusses the drilling methods that fall into these two general categories.

4.1 Methods Without Circulating Fluids

There are two drilling methods that do not require circulating fluids: augering and percussion drilling. SOPs for each of these methods are described below.

4.1.1 Augering

Auger drilling is accomplished by rotating a pipe or rod that has a cutting bit. The common auger drilling methods discussed in this section are hand, continuous-flight, hollow-stem, and bucket.

4.1.1.1 Hand Auger

A hand auger typically cuts a hole 2 to 9 inches in diameter and, depending on the geologic materials, may be advanced to about 15 or 20 feet. Generally, the borehole cannot be advanced below the water table because the hole collapses. Soil samples for chemical or geotechnical analyses should not be collected directly from a hand auger because the samples are disturbed and cross contamination may occur. Samples for chemical or geotechnical analyses should be taken with a sampling tool such as a drive sampler driven at the desired depth. Samples for lithologic logging purposes may be taken directly from the auger.

Applications	Limitations
• Shallow soil investigations	• Limited to shallow depths
• Requires minimal access	• Unable to penetrate dense or rocky soil
• Soil sample collection	• Borehole stability difficult to maintain
• Water-bearing zone identification	• Labor intensive

4.1.1.2 Continuous-Flight Auger

Continuous-flight augers consist of a plugged, tubular steel center shaft around which a continuous steel strip, in the form of a helix, is welded. An individual auger is known as a “flight” and is generally 5 feet long. Auger drill heads are generally designed to cut a hole 10 percent greater in diameter than the actual diameter of the auger they serve. In addition to diameter, augers are specified by the pitch of the auger and the shape and dimension of the connections.

Applications

- Shallow soils investigations
- Soil sample collection
- Vadose zone monitoring wells
- Groundwater monitoring wells in saturated, stable soils
- Identification of depth to bedrock
- Fast and mobile

Limitations

- Soil sampling difficult and limited to areas of stable soils
- Difficult to build monitoring wells in unstable soils
- Depth capability decreases as diameter of auger increases
- Monitoring well diameter limited by auger diameter

4.1.1.3 Hollow-Stem Auger

Hollow-stem augers are commonly used in unconsolidated materials to depths of approximately 150 feet. An advantage of this drilling method is that undisturbed soil samples can be collected and the augers act as a temporary outer casing when installing a monitoring well.

Hollow-stem augers are generally made of two pieces: an annular outer head attached to the bottom of the lead auger and an inner pilot or center bit mounted in a plug that is removable from the center of the auger to the surface. The removable inner plug is the primary advantage of this drilling method. Withdrawing the plug while leaving the auger in place provides an open, cased hole into which samplers, down-hole drive hammers, instruments, casing, wire, pipe, or numerous other items can be inserted. Replacing the center bit and plug allows for continuation of the borehole.

Hollow-stem augers are specified by the inside diameter of the hollow stem, not by the hole size it drills. Hollow-stem augers are available with inside diameters of 2.5, 3.25, 3.375, 4.0, 4.25, 6.25, 6.625, 8.25, and 10.25 inches. The most commonly used sizes are 3.25 inches and 4.25 inches for 2-inch monitoring wells and 6.625 inches for 4-inch monitoring wells. The larger diameter augers, 8.25 and 10.25 inches, are not generally used for monitoring well installation, although they have been used for the installation of dual-purpose wells.

The rotation of the augers causes the cuttings to move upward and “smear” along the borehole walls. This smearing may effectively seal off the upper zones, thereby reducing the possibility of cross contamination of the upper zones to the deeper zones, but increases the possibility of deep to shallow contamination. However, this is not a method that is used for the purpose of sealing a borehole.

Drilling speed with hollow-stem augers is dependent upon the types of materials encountered. Heavy formations such as "fat" clays should be drilled at 30 to 50 revolutions per minute (rpm). Good clean sand that will stand open can be successfully augered at 75 rpm.

Applications

- Most frequently used method
- All types of soil investigations
- Permits good soil sampling with split-spoon or thin-wall samplers
- Monitoring well installation in all unconsolidated formations
- Can serve as temporary casing
- Can be used in stable formations to set surface casing

Limitations

- Difficulty in preserving sample integrity in heaving formations
- Formation invasion by water or drilling mud if used to control heaving
- Possible cross contamination of aquifers where annular space not positively controlled by water or drilling mud or surface casing
- Limited diameter of augers limits casing size
- Smearing of clays may seal off aquifer to be monitored

4.1.1.4 Bucket Auger

Bucket augers have a depth capacity of 30 to 75 feet and are used for large diameter holes (16 to 48 inches). Most bucket augers are "gravity fed" and are used for vertical holes. They are not normally used to drill monitoring wells or for soil sampling but may be used to drill production and recovery wells. Bucket augers may also be used to set conductor or surface casings for production wells.

Generally, the auger bucket advances into the formation by combination of dead weight and the tooth cutting angle. The auger cuts into the formation approximately 1 to 2 feet at a time, filling the auger bucket. The bucket is attached to the lower end of a kelly bar that passes through and is rotated by a large ring gear that serves as a rotary table. The kelly is square in cross section and consists of two or more lengths of square tubing, one length telescoped inside the other. When the bucket is withdrawn from the hole by means of a wire-line hoist cable, it is swung to the side of the hole and the spoil is dumped out through the bottom by means of a hinge and latch device on the bucket bottom.

Applications

- Drilling of large diameter boreholes to a maximum depth of 75 feet
- Drilling in unconsolidated formations

Limitations

- Difficult to advance the borehole below the water table
- Consolidated formations and cobbles are difficult to drill

- Loose sand formations may slough during drilling
- Undisturbed soil sampling difficult to achieve

4.1.2 Percussion Drilling

The basic method of advance in percussion drilling is hammering, striking, or beating on the sediments or formation. Common percussion methods that do not use circulating fluids are cable-tool, driven boreholes, and sonic drilling.

4.1.2.1 Cable-Tool Drilling

Cable-tool operates by alternately raising and dropping a bit, hammer, or other heavy tool. In consolidated formations, the drill bit breaks or crushes the formation. In unconsolidated formations, the drill bit primarily loosens the formation when drilling. In both instances, the reciprocating action of the tools mixes the crushed or loosened particles with water to form a slurry or sludge at the bottom of the borehole. If little or no water exists in the penetrated formation, water is added to form the slurry. Slurry accumulation increases as drilling proceeds and eventually it reduces the impact of the tools. When the drop of the string of tools is hindered by the thickened slurry, the slurry is removed by a bailer. Water is then added, if needed, and drilling resumes.

Most boreholes drilled in unconsolidated formations are drilled “open hole;” that is, no casing is used during part or all of the drilling operation. Drilling in unconsolidated formations differs from hard-rock drilling as pipe or well casing must follow the drill bit closely as the well is deepened to prevent caving and to keep the borehole open.

Using the cable-tool drilling technique in monitoring work is limited because the method is slow. Drilling rates of 20 to 100 feet per day are typical with the average being approximately 50 feet per day. Holes much smaller than 6 inches are impractical because of the need for a relatively large, heavy bit. The method does not use drilling muds but does allow sampling of groundwater with a drive and bail technique as the hole is advanced in high-yielding formations.

Applications

- Drilling in all types of geologic formations
- Almost any depth and diameter range
- Ease of monitoring well installation

Limitations

- Drilling relatively slow
- Heaving of unconsolidated materials must be controlled

- Ease and practicality of well development
- Excellent samples of geologic materials
- Equipment availability more common in central, north central and northeast sections of the United States

4.1.2.2 Driving

A borehole can be constructed by driving a solid probe or plugged pipe into the ground. The information obtained by this technique can be either minimal or extensive.

Driven wells, commonly referred to as wellpoints, are driven into the ground by hand or with heavy drive heads mounted on a tripod, drill rig derrick, or similar hoisting device. Wellpoints consist of a wellpoint (screen) that is attached to the bottom of a casing. Wellpoint and casing diameters generally range from 1.25 to 2 inches. Depths of 30 feet can be achieved by hand in sands or sands and gravels with thin clay seams. Depths of 50 feet or more can be achieved in loose soils with hammers weighing up to 1,000 pounds.

Driving through dense silts and clays and/or bouldery silts and clays is often extremely difficult or impossible. The well point may not be structurally strong enough and may be damaged or destroyed by driving through dense soils. Additionally, the screen may become plugged when driving through silts and clays and may be very difficult to reopen during development. Soil samples cannot be collected during this process; however, crude stratigraphic information may be obtained by recording the number of blows per foot of penetration. Driven wells or well points are usually installed for the collection of groundwater samples and the determination of static water levels to establish the regional groundwater gradient.

A large track-mounted backhoe (CAT 245) has been used to install extraction wells in a landfill to the 30-foot depth. The bucket of the backhoe is used to push a 6-inch diameter drive pipe with a plugged bottom. When the drive pipe reaches the final depth for the well, the plug at the bottom of the drive pipe is removed and the well screen and casing materials are placed inside the drive pipe. A large 50-ton crane then pulls the drive pipe, leaving the well materials in the borehole. This technique is highly dependent upon the geologic formation and required depth. The drive pipe pushes the formation aside. This can cause a compaction of the formation, which could impact the performance of the well.

Considerably more information can be obtained by driving a penetrometer or a Dutch Cone. Penetration of the soil with a cone forces the soil aside, creating a complex shear failure. The degree of resistance yields the geologic logs of the borehole. Penetrometers can also obtain groundwater samples and possibly soil samples. The borehole that the penetrometer makes is

usually abandoned; however, occasionally a small-diameter piezometer can be constructed within the borehole. For more information on cone penetrometer testing, see the SOP on Cone Penetrometer Testing (SOP-11).

Applications

- Drilling of a borehole when soil samples are not needed
- Installation of a shallow well point when there are site access and work place limitations

Limitations

- Geologic formations must be conducive for driven wells
- Driven wells should be limited to shallow wells
- Formation compaction usually occurs that can affect well production

4.1.2.3 Sonic Drilling

Sonic drilling, also known as resonance drilling, is a percussion drilling technique that uses a high-frequency drive hammer. The frequency of the drive hammer varies from 150 to 250 hits per minute. The drive pipe is either closed bottom or fitted with a soil sampling tube. If the bottom of the drive pipe is closed, the borehole is made without the removal of any formation. Instead, the formation is literally pushed to the side and out of the way of the drive pipe, which acts as well casing as the boring proceeds. The high frequency of the hammer tends to liquefy the formation in the vicinity of the bit, thus reducing the degree of difficulty of pushing pipe into the formation.

A soil sampling device, such as a split-spoon sampler or a core barrel, can be placed inside the drive pipe in lieu of the end plug. The sampler is removed at 5- or 10-foot intervals and replaced with an empty sampler. This procedure yields a continuous soil sample and produces minimal waste as only the formation within the sampler is brought to the surface. A monitoring well can be installed in the borehole by removing the sampler and setting the well screen and casing inside the drive pipe. The drive pipe is then withdrawn. This drilling technique again pushes the formation aside to create the borehole. Certain formation compaction can occur which could impact the performance of a well. Additionally, the rate of penetration of the drive pipe is very high, producing considerable heat at the bit on the drive pipe and within the sampler. The heat in the sampler may have a detrimental effect on soil samples for chemical analysis.

Applications

- Rapid drilling technique especially in difficult drilling formations

Limitations

- Very limited equipment availability
- Heat generated with drive pipe can

- Use when drilling in contaminated areas and disposal costs for wastes are high
- Can obtain continuous core compromise soil samples
- Formation compaction usually occurs that can affect well production

4.2 Methods With Circulating Fluids

Many drilling techniques use a circulating fluid, such as water or drilling mud, gas such as air, or a combination of air, water, and a surfactant to create foam. Circulation fluids flow from the surface either through the drill pipe, out through the bit, and up the annulus between the borehole wall and the drill pipe (direct rotary) or down the borehole annulus, into the bit, and up the drill pipe (reverse rotary). Generally the up-hole velocity needed to transport cuttings to the surface is between 100 to 150 feet per minute for plain water with no additives, 80 to 120 feet per minute for high-grade bentonite drill muds, 50 to 1,000 feet per minute for foam drilling, and up to 3,000 feet per minute for air with no additives. Additives decrease the required minimum velocity. Excessive velocities can cause erosion of the borehole wall.

The use of circulating fluids may involve the addition of chemicals to the borehole. Drilling mud utilizes bentonite clay and possibly polymers. Additives to air drilling may include surfactants (detergents) and water mist to generate foam. Compressed air may also contain various amounts of hydrocarbon lubricants. Therefore, attention should be given to the circulating fluids and any possible additives that are used when using drilling methods utilizing circulation fluids.

4.2.1 Rotary Drilling Methods

Rotary drilling methods require the rotation of the drill pipe and the drill bit to advance the borehole. The common drilling methods that use circulating fluids to remove the drill cuttings from the borehole are presented in the following sections.

4.2.1.1 Conventional Mud Rotary Drilling

In conventional mud rotary drilling, the circulating fluid is pumped from the surface through the rotating drill pipe and bit to flush cuttings to the surface. At the surface the fluid is directed into a circulation pit or tank where the cuttings settle out. The circulating fluid is then picked up with the mud pump and again directed downhole. Bentonite is usually added to water to make the drilling mud or fluid. The functions of the drilling fluid are to:

- Lift the cuttings from the bottom of the borehole and carry them to a settling pit

- Support and stabilize the borehole wall to prevent caving
- Seal the borehole wall to reduce fluid loss
- Cool and clean the drill bit
- Allow the cuttings to drop out in the settling pit
- Lubricate the bit, cone bearings, mud pump, and drill pipe

For effective rotary drilling, the down force on the bit should be great enough to cause continuous penetration of the boring. The pounds per inch of bit weight depends upon the configuration of the bit and the formation being penetrated. Rotary speeds are generally in the range of 60 to 200 rpm.

Applications

- Rapid drilling of clay, silt, and reasonably compacted sand
- Allows split-spoon and thin-walled samples in unconsolidated materials
- Allows core sampling in consolidated rock
- Drilling rigs widely available
- Abundant and flexible range of tool sizes and depth capabilities
- Very sophisticated drilling and mud programs available
- Geophysical borehole logs

Limitations

- Difficult to remove drilling mud and wall cake from borehole wall during development
- Bentonite and other drilling additives may influence quality of groundwater samples
- Circulated samples poor for monitoring well screen selection
- Split-spoon and thin-wall samplers are expensive and of questionable cost-effectiveness at depths greater than 150 feet
- Wireline coring techniques for sampling both unconsolidated and consolidated formations often not available locally
- Difficult to identify aquifers
- Drilling fluid invasion of permeable zones may compromise validity of subsequent monitoring well samples

4.2.1.2 Air Rotary Drilling

In air rotary drilling, the circulation fluid is compressed air or a mixture of compressed air, a surfactant, and water mist, which creates a foam. As in conventional mud rotary, the drilling fluid is forced through the rotating drill pipe and bit to flush cuttings to the surface. At the surface the fluid is directed into a pit or storage container. The up-hole velocity of the air and cuttings should be approximately 3,000 feet per minute. Air rotary drilling method is primarily used in consolidated formations due to the fact that the rapidly rising cuttings would cause

considerable erosion of the borehole wall in unconsolidated formations. With the air rotary drilling method, the circulating fluid is not reused again. The following are functions of the drilling fluid:

- Lifting the cuttings from the bottom of the borehole and carrying them to the surface
- Cooling and cleaning the drill bit
- Lubricating the bit, cone bearings, mud pump, and drill pipe

Rotary speeds are generally in the range of 75 to 200 rpm. If the hardness of the formation increases to the point that roller-cone rock bits cannot successfully penetrate the formation, then a down-hole air hammer is used to penetrate the formation. The rotating speed using the down-hole air hammer is in the range of 15 to 30 rpm.

Applications

- Rapid drilling of semi-consolidated and consolidated rock
- Good quality/reliable formation samples
- Equipment generally available
- Allows easy and quick identification of lithologic changes
- Allows identification of most water bearing zones
- Allows estimation of yields in strong water-producing zones with short "down time"

Limitations

- Surface casing frequently required to protect top of hole
- Drilling restricted to semi-consolidated and consolidated formations
- Samples reliable but occur as small particles that are difficult to interpret
- Drying effect of air may mask lower yield water producing zones
- Air stream requires contaminant filtration
- Air may modify chemical or biological conditions. Recovery time uncertain

4.2.1.3 Air Rotary Casing Hammer (Drill and Drive)

Air rotary casing hammer method combines percussion and air rotary drilling methods to drill in unconsolidated formations. The borehole is drilled with the air rotary drilling method. Casing or drive pipe follows closely behind the rotary bit to prevent the erosion of the borehole wall. The casing is driven similar to a pile driver except for a hole through its axis through which a drill pipe is inserted and rotated. The drill bit is usually extended approximately 1-foot below the bottom of the drive pipe that acts as temporary casing.

Applications

- Rapid drilling of unconsolidated sands, silts, and clays
- Drilling in alluvial materials (including boulder formations)
- Casing supports borehole thereby maintaining borehole integrity and minimizing inter-aquifer cross contamination
- Eliminates circulation problems common with direct mud rotary method
- Good formation samples
- Minimal formation damage as casing pulled back

Limitations

- Thin, low pressure water bearing zones easily overlooked if drilling not stopped at appropriate places to observe whether or not water levels are recovering
- Samples pulverized as in all rotary drilling
- Air may modify chemical or biological conditions
- Difficult to obtain soil samples for chemical analysis

4.2.1.4 Center Stem Recovery Rotary Drilling (Reverse Circulation)

In reverse circulation drilling, the circulating fluid (water) flows from the surface down the borehole annulus outside the drill pipe, into the drill bit, and up the inside of the drill pipe to ground surface. The fluid carries the cuttings to the surface and discharges them into a settling pit or tank. Reverse circulation is especially advantageous in very large boreholes and also in those cases where the erosive velocity of conventional rotary circulation would be detrimental to the borehole wall. Drilling is accomplished typically with water without additives. A large and dependable water supply is required to keep the borehole full of drilling fluid to maintain sufficient hydrostatic head on the borehole walls to prevent sloughing. Reverse circulation has few applications in monitoring work except when nested wells are desired. Production wells with 18- to 24-inch-diameter casing are typically drilled by the reverse circulation drilling method. Typical borehole diameters range from 15 to 36 inches; however, 60-inch-diameter boreholes are not uncommon.

Applications

- Large capacity production wells
- Nested wells
- Normally does not use drilling muds (little if any mud cake is formed on the wall of the borehole)
- Drills best in unconsolidated sands, silts, and clays

Limitations

- Requires large and dependable source of water during drilling and well installation
- Cobbles and bedrock are difficult to drill

4.2.1.5 Dual-Tube Rotary

Dual-tube rotary is an exploratory drilling technique utilizing two concentric drill pipes. Both drill pipes are rotated during drilling. The outside of the outer drill pipe is typically 4.5 inches in diameter. The diameter of the borehole is approximately 5 inches. Compressed air is forced between the two drill pipes and is directed to the center pipe at the bit. The cuttings are carried to the surface by the returning air at a velocity of approximately 3,000 feet per minute. This is an excellent drilling method to identify lithology and the locations of aquifers in deep boreholes. It is very difficult to obtain undisturbed soil samples for chemical or geotechnical analyses; however, groundwater samples can be obtained as aquifers are encountered. Geophysical logs can be obtained if the borehole is filled with drilling mud as the drill pipe is removed. Monitoring wells are typically not installed in dual-tube rotary boreholes unless the borehole is reamed out by the mud rotary method. Depths of 1,000 feet are not uncommon for this drilling method and typically, the more consolidated the formation, the better the drilling, as unconsolidated formations cause more drag or friction on the outside of the rotating drill pipe.

Applications

- Used mostly for exploratory boreholes
- Rapid extraction of drill cuttings from the borehole
- Drill cuttings are representative of formation
- Very rapid penetration rate in all formations
- Can collect groundwater samples as aquifers are encountered

Limitations

- Equipment availability
- Cannot obtain undisturbed soil samples for chemical analysis
- Borehole size is limited (5 inches)

4.2.2 Dual-Tube Percussion Drilling

Dual-tube percussion drilling is very similar to dual-tube rotary drilling with the exception that the two drive pipes do not rotate during drilling. Two concentric drive pipes are driven into the ground with a hammer. The hammer is similar to units on pile drivers. The typical outside diameter of the outer drive pipe is 9 to 12 inches. The typical inside diameter of the inner pipe, where well materials would be inserted, is 6 to 8 inches. This drilling system is also a center stem recovery system. This drilling technique has been developed and is used primarily in hazardous waste investigations. This method is rapid and effective to depths of about 250 feet.

The outer pipe effectively seals off the formation while drilling, reducing the chance of cross contamination. Air is pumped between the annulus of the two pipes to the bit where it is

deflected upward into the center pipe. Cuttings are transported to the surface through the center pipe.

In general, three systems are available: 7-inch outside diameter (OD)/4.25-inch inside diameter (ID), 9-inch OD/6-inch ID, and 12-inch OD/8-inch ID. A 2-inch-diameter monitoring well can be constructed in the 7-inch system, a 4-inch-diameter monitoring well can be constructed in the 9-inch system, and a 5- or 6-inch-diameter monitoring well can be constructed in the 12-inch system.

Applications

- Very rapid drilling through both unconsolidated and consolidated formations
- Allows continuous sampling for lithologic logging in all types of formations
- Very good representative samples can be obtained with minimal risk of contamination of sample and/or water bearing zone
- In stable formations, wells with diameters as large as 6 inches can be installed in open hole completions
- Soil samples can be easily obtained for chemical analysis

Limitations

- Limited borehole size that limits diameter of monitoring wells
- In unstable formations wells are limited to approximately 4 inches
- Equipment availability more common in the southwest
- Air may modify chemical or biological conditions; recovery time is uncertain

4.2.3 Suction Drilling

Suction drilling has been used to drill into consolidated formations that yield little if any groundwater. This is an experimental drilling method that has been used by the U.S. Geological Survey (USGS) to drill in basalts in Idaho. The drilling technique is very similar to the reverse circulation drilling technique discussed in Section 4.2.1.4 with the exception that air is circulating, not water. To drill the borehole, a drill rig rotates a modified air rotary bit at the end of the drill pipe. The cuttings are removed by the suction from a high-pressure, high-volume air and steam ejector/eductor siphon system. The suction is directed to the interior of the drill pipe. All formation cuttings, including formation fluids, are brought to the surface via the interior of the drill pipe.

To drill a 10-inch-diameter borehole, two 600 cubic feet per minute (cfm)/250 pounds per square inch (psi) air compressors are connected parallel to the ejector/eductor siphon device. Suction

from the siphon device is directed to the 2-3/8-inch-diameter drill pipe. A 1.5-horsepower blower fan is used to direct air down the borehole.

Applications	Limitations
• Allows continuous sampling for lithologic logging	• Formations must be very consolidated to prevent the borehole wall from sloughing during drilling
• Very good representative samples can be obtained	• Cuttings are very abrasive to the drill pipe and discharge lines
• Drilling is not impeded in fractured formations that typically cause lost circulation problems	• Difficult to maintain an adequate vacuum as air leaks form easily at threaded joints of the drill pipe
	• Groundwater could prevent the advancement of the borehole

Drilling contractors have had numerous mechanical problems advancing boreholes beyond the 150-foot depth. Vacuum leaks have caused a loss in suction and the plugging of the drill pipe. The drill pipes have twisted off and the abrasive cuttings have worn holes in hoses and pipes. This drilling method has some unique advantages; however, until the mechanical problems are solved, this technique will not be available for use.

5.0 CONSIDERATIONS FOR SELECTION OF DRILLING METHODS

Each project or drilling site has its own considerations for the selection of a particular drilling method. Prior to selecting a drilling method, several factors must be considered. The major factors that this section will address include the objective of the drilling program, site conditions, wastes generated, and Basic Remediation Company (BRC) preferences. Other factors include drilling costs, availability of trained crews and appropriate equipment, and project schedule requirements. Recognize that it may be very difficult to fulfill all of the sampling/drilling objectives with a single drilling method. The drilling method selected may compromise some of the objectives of the drilling program.

5.1 Drilling Objectives

The primary consideration in selecting any drilling method is to ensure the selected method is capable of meeting the objective(s) of the drilling/sampling program. It is common to have more than one objective for the drilling/sampling program and it may be difficult to satisfy all OF the program objectives.

For example, if sample collection (soil or groundwater) is the objective, the selected method must be capable of collecting, in an appropriate and approved manner, the necessary samples. Additionally, the contaminants of concern may influence the drilling and sampling method.

Alternatively, if the objective of the drilling program is to install vapor or groundwater extraction wells, the selected method must be suitable for the installation of the designed well. It is important to not only consider the physical limitations of a particular drilling technique (i.e., depth and diameter), but examine the consequences of the drilling method with the drilling objective (i.e., smearing of the borehole walls rendering wells ineffective or inefficient).

5.2 Site Conditions

Site conditions can limit the drilling methods available for a particular program. Site conditions to be considered include both subsurface and surface conditions.

5.2.1 Subsurface Conditions

The subsurface stratigraphy of a site is a fundamental consideration when selecting a particular drilling method. The drilling equipment selected must be capable of effectively and economically penetrating the strata at the site to meet the project objectives. Particular stratigraphy that may pose problems for certain drilling methods include tight clayey soils, swelling clays, flowing sands, caliche, gravels, cobbles, lost circulation zones, and bedrock.

In addition to stratigraphy, the site hydrology must also be considered. If multiple water-bearing zones are expected, a conductor casing may be needed to seal off shallow water-bearing zones and prevent potential cross contamination. The need for conductor casings can affect the selection of a particular drilling method. Wells that deeply penetrate aquifers can also affect the selection of a particular drilling method.

5.2.2 Surface Conditions

Surface conditions can affect access to the site and the amount of available work space (both horizontal and vertical or overhead space). These in turn can affect the selection of a particular method or type of drill rig. Limited access and work space may require smaller or remotely powered drill rigs. The site terrain is a very important factor in choosing the drilling method as it is very expensive and difficult to mobilize large and/or heavy equipment over rugged terrain. For sites such as these, drill rigs (typically hollow-stem auger) are mounted on all-terrain equipment.

In addition to access and work space, the work environment must also be considered. This includes both weather and other site activities. Extremely hot or cold climates may require use of special drilling equipment or methods. Sites such as refineries where explosive atmospheres could exist may also require very special equipment. All site activities must also be considered as they may impact the selection of the drilling method.

5.3 Waste Generation

Drilling operations typically generate significant volumes of waste that must be handled, stored, and eventually disposed. This is of particular concern when drilling into contaminated or hazardous materials. The type and volume of wastes generated during drilling differs for different drilling methods. The different handling and disposal requirements of drilling wastes can greatly affect project costs. The different drilling methods can also require vastly different volumes of groundwater be removed to fully develop the well.

5.4 BRC Preferences

BRC has valid concerns regarding dust, noise, size, weight, or other nuisances related to drilling operations near property boundaries located near residential areas. For example, certain drilling methods require continuous operations until the borehole/well is completed, requiring lights for night work. This may not be possible in some situations. These site-specific or client-specific preferences must be considered when selecting a drilling method.

BASIC REMEDIATION COMPANY
STANDARD OPERATING PROCEDURES
BMI COMMON AREAS
CLARK COUNTY, NEVADA

SOP-02

GROUNDWATER MONITORING WELL DESIGN AND INSTALLATION

STANDARD OPERATING PROCEDURES

SOP-02
GROUNDWATER MONITORING WELL DESIGN AND INSTALLATION

TABLE OF CONTENTS

Section **Page**

1.0 INTRODUCTION 1

2.0 DEFINITIONS 1

3.0 RESPONSIBILITIES 3

4.0 WELL DESIGN 3
- 4.1 Casing Diameter and Screen Length 4
- 4.2 Casing and Screen Materials 5
- 4.3 Decontamination of Casing and Screen Materials 7
- 4.4 Filter Pack and Well Screen Design 8
  - 4.4.1 Naturally Developed Wells 8
  - 4.4.2 Artificial Filter-Packed Wells 8
- 4.5 Annular Seal 11
- 4.6 Surface Completions 12

5.0 REFERENCES 13

DISCLAIMER

THE FOLLOWING STANDARD OPERATING PROCEDURE PROVIDES GENERAL GUIDANCE FOR BRC CONTRACTORS FOR TECHNICAL ISSUES ADDRESSED DURING ENVIRONMENTAL SITE INVESTIGATION AND REMEDIATION ACTIVITIES. IT IS NOTED, HOWEVER, THAT EACH SITE IS UNIQUE AND THESE GUIDELINES ARE NOT A SUBSTITUTE FOR COMMON SENSE AND GOOD MANAGEMENT PRACTICES BASED ON PROFESSIONAL TRAINING AND EXPERIENCE. IN ADDITION, INDIVIDUAL CONTRACT TERMS MAY AFFECT THE IMPLEMENTATION OF THIS STANDARD OPERATING PROCEDURE. BRC CONTRACTORS RESERVE THE UNRESTRICTED RIGHT TO CHANGE, MODIFY OR NOT APPLY THESE GUIDELINES IN THEIR SOLE, COMPLETE, AND UNRESTRICTED DISCRETION TO MEET CERTAIN CIRCUMSTANCES, CONTRACTUAL REQUIREMENTS, SITE CONDITIONS, OR JOB REQUIREMENTS.

1.0 INTRODUCTION

This Standard Operating Procedure (SOP) is applicable to the design and installation of permanent groundwater monitoring wells at BMI Common Areas. Each monitoring well must be designed to suit the hydrogeologic setting, the type of contaminants to be monitored, overall purpose of the monitoring program, and other site-specific variables. As such, site-specific objectives for each monitoring well and its intended use must be clearly defined before the monitoring system is designed. Additionally, within a monitoring system, different monitoring wells may serve different purposes and thus require different types of construction. Therefore, during all phases of well design, Basic Remediation Company (BRC) contractors must clearly document the basis for design decisions, the details of well construction, and the materials to be used. At many BMI Common Area sites, precedence has been set as to well slot size and filter pack materials; therefore, it is not necessary to do a sieve analysis for determining well design details.

2.0 DEFINITIONS

Absorption	The penetration or apparent disappearance of molecules or ions of one or more substances into the interior of a solid or liquid.
Adsorption	The process by which atoms, ions, or molecules are assimilated to the surface of a material. Ion-exchange processes involve adsorption.
Annular Sealant	Material used to provide a positive seal between the borehole and the casing of the well. Annular sealants should be impermeable and resistant to chemical or physical deterioration.
Annular Space	The space between the borehole wall and the well casing, or the space between a casing pipe and a liner pipe.
Aquifer	A geologic formation, group of formations, or part of a formation that can yield water to a well or a spring.
Backwashing	A method of filter pack emplacement whereby the filter pack material is allowed to fall freely through the annulus while clean fresh water is simultaneously pumped down the casing.
Bentonite	Hydrous sodium montmorillinite mineral available in powder, granular, or pellet form. It is used to provide a tight seal between the well casing and the borehole.

Bridging	The development of gaps or obstructions in either grout or filter pack materials during emplacement.
Continuous Slot Wire-Wound Well Screen	A well intake that is made by winding and welding triangular-shaped, cold-rolled wire around a cylindrical array of rods. The spacing of each successive turn of wire determines the slot size of the intake.
Corrosion	The adverse chemical alteration that reverts elemental metals back to more stable mineral compounds and that affects the physical and chemical properties of the metal.
Filter Pack	Sand, gravel, or glass beads that are uniform, clean, and well-rounded that are placed in the annulus of the well between the borehole wall and the well intake to prevent formation material from entering through the well intake and to stabilize the adjacent formation.
Grout	A fluid mixture of neat cement and water with various additives or bentonite of a consistency that can be forced through a pipe and placed in the annular space between the borehole and the casing to form an impermeable seal.
Monitoring Well	A well that is capable of providing a groundwater level and sample representative of the zone being monitored.
Naturally Developed Well	A well construction technique whereby the natural formation materials are allowed to collapse around the well intake and fine formation materials are removed using standard development techniques.
Neat Cement	A mixture of Portland cement and water in the proportion of five to six gallons of clean water per bag (94 pounds) of cement.
Piezometers	A small-diameter, non-pumping well used to measure the elevation of the water table or potentiometric surface.
Sieve Analysis	Determination of the particle-size distribution of soil, sediment, or rock by measuring the percentage of the particles that will pass through standard sieves of various sizes.
Slurry	A thin mixture of liquid, especially water, and any of several finely divided substances such as cement or clay particles.
Tremie Pipe	A device, usually a small-diameter pipe that carries grouting materials to the bottom of the borehole and that allows pressure grouting from the bottom up without introduction of appreciable air pockets.

Well Cluster	Two or more wells completed (screened) to different depths in a single borehole or in a series of boreholes in close proximity to each other. From these wells, water samples that are representative of different horizons within one or more aquifers can be collected.
Well Point	A sturdy, reinforced well screen or intake that can be installed by being driven into the ground.

3.0 RESPONSIBILITIES

The **Project Manager** or **Task Leader** (a qualified Nevada Certified Environmental Manager [C.E.M.]) will select the site-specific monitoring well design and installation methods, with input from the site geologist or hydrogeologist and field team leader, and will maintain close supervision of the activities and progress.

The **Site Hydrogeologist** selects site-specific drilling/sampling options and helps prepare technical provisions of drilling methods.

The **Field Project Leader/Geologist** implements the selected drilling program.

The **Drilling Rig Geologist** supervises and/or performs actual monitoring well installation.

4.0 WELL DESIGN

Consideration should be given to the following site-specific information before a groundwater monitoring system is designed:

- Purpose of the groundwater monitoring program (water quality, water levels, remediation, flow direction, and velocities)
- Surficial conditions, including topography, climate, drainage, site access
- Known or anticipated hydrogeologic setting including geology (consolidated/ unconsolidated), physical characteristics of the aquifer (porosity/permeability), type of aquifer (confined/unconfined), recharge/discharge conditions, aquifer thickness, and groundwater/surface water interrelationships
- Borehole geophysical logs, if any
- Known or anticipated contaminant chemical characteristics (chemistry, density, viscosity, reactivity, and concentration)
- Anticipated seasonal fluctuations in groundwater levels

- Anthropogenic or tidal influences
- Regulatory requirements

Common mistakes in groundwater monitoring system design include the following:

- Use of well casing or well screen materials that are incompatible with the hydrogeologic environment, and/or the anticipated contaminants, resulting in chemical alteration of the samples or failure of the well
- Use of nonstandard well screen (field slotted or perforated) or incorrect slot size, resulting in well sedimentation and turbid groundwater samples
- Improper length or placement of the well screen so that acquisition of accurate water level or water quality data from discrete zones is impossible
- Improper selection and placement of filter pack materials resulting in well sedimentation, well screen plugging, or chemical alteration of the groundwater
- Improper selection and placement of annular seal materials resulting in alteration of groundwater chemistry, plugging of the filter pack and/or well screen, or cross-contamination from geologic units that have been sealed off improperly
- Inadequate surface protection resulting in surface water entering the well

Siting of monitoring wells should be performed after a preliminary estimation of the hydraulic gradients and groundwater flow direction. In most cases this may be done through review of background data and site terrain. Additionally, production wells in the area may be used to assess the local groundwater flow direction. If the groundwater flow direction cannot be determined by any of these methods, it may be practical to install piezometers in a preliminary phase to determine flow direction.

4.1 Casing Diameter and Screen Length

Monitoring well casing diameter is dependent on the purpose of the well and the amount and size of downhole equipment that must be accommodated. Additional criteria for selecting casing diameters include: drilling or well installation method used, anticipated depth of the well and associated strength requirements, ease of well development, volume of water required to be purged prior to sampling, rate of recovery of the well after purging, and cost.

Monitoring well casing diameters are generally two or four inches. Pumping tests or some types of borehole geophysical equipment may require wells six inches or larger in diameter. Four-inch-

diameter wells are usually preferred due to their versatility. In smaller diameter wells, the volume of stagnant water to be purged prior to sampling is minimized, the cost of well construction is reduced, and the well stabilizes relatively quickly. The quantities of potentially contaminated drill cuttings and development and purge water are also reduced.

The borehole diameter should be a minimum of four to six inches larger than the well casing and screen to allow for proper placement of annular materials.

In situations where vertical groundwater gradients are minimal, screen lengths are typically 10 to 20 feet, with stratified formations possibly requiring shorter screen lengths. If non-aqueous phase liquids (NAPLs) that are lighter than water are anticipated, the well screen should extend above the water table so these liquids can be sampled. Consideration should be given to seasonal fluctuations in water levels when locating the well screen above the top of the water table. If dense NAPLs are anticipated, the screen interval should extend to the base of the aquifer. Well clusters may be necessary when contaminants both denser and lighter than water are anticipated in the same aquifer.

4.2 Casing and Screen Materials

Monitoring well casing is specified by diameter, thickness, and type of material. Well screens also require that slot size be specified. Casing thickness is referred to as "schedule." Polyvinyl chloride (PVC) is usually Schedule 40 (thinner wall), although Schedule 80 (thicker wall) is sometimes used for deep wells. Steel casing is typically Schedule 5 or 10.

Selection of casing and screen material must be based on three primary characteristics: chemical interference potential, chemical resistance, and physical strength. The materials must not assimilate chemicals either by adsorption onto the material surface or absorption into the material matrix or pores; they must be durable enough to withstand potential chemical attacks either from natural chemical constituents or groundwater contaminants; and they must have the structural strength to withstand the forces exerted on them by the surrounding geologic materials and during installation. The three components of casing and screen structural strength are tensile strength, compressive (column) strength, and collapse strength.

Casing and screen materials generally available are Teflon, PVC, stainless steel, galvanized steel, carbon steel, and low-carbon steel. Teflon materials are extremely expensive and of comparatively low strength. Although relatively inert, recent studies have shown that Teflon is prone to sorption of selected organic compounds.

The two most commonly used materials are PVC and stainless steel. PVC is inexpensive, widely available, lightweight, and easy to work with. However, the column strength of PVC may limit the depth of installation. Schedule 80 PVC may be used for deeper wells; however, the reduced inside diameter should be taken into account when designing the well. Many studies have been conducted concerning the effect of PVC on water quality data. Whereas adsorption of some chlorinated species to PVC was documented, the adsorption rate was found to be very slow. Because a sample is generally taken shortly after the purging of stagnant water in contact with the casing, the contaminants in the water will have minimal time to be influenced by sorption or leaching effects. Therefore, potential sample bias effects due to interactions with PVC appear to be negligible.

Steel well materials are stronger, more rigid, and less temperature sensitive than PVC or Teflon. Stainless steel has the highest corrosion resistance of the various types of steel. Type 304 and Type 316 are the most commonly used stainless steels. Both are available in low-carbon forms, which are more easily welded than the normal carbon steel. Low-carbon steel is designated by an "L" after the number (e.g., Type 304L). Type 304 stainless steel is superior to Type 316 from a corrosion resistance and cost standpoint. Type 316 is preferred to Type 304 under reducing conditions. For either type of stainless steel, long-term exposure to corrosive conditions may result in chromium or nickel contamination of groundwater samples. Insoluble halogen and sulfur compounds may also form as a result of corrosion of stainless steel.

Threaded, flush-joint casing is preferred for monitoring well applications. Welded-joint steel casing may also be acceptable, but is typically more expensive and inconvenient. Glued PVC should never be used for monitoring wells since the glue may release organic contamination into the well. The casing should have a well cap that is vented to prevent the accumulation of gases and to allow water levels in the well to respond to barometric and hydraulic pressure changes.

The hydraulic efficiency of a well screen depends primarily upon the amount of open area available per unit length of screen. The two screen types commonly used for monitoring wells are machine-slotted, and continuous-slot wire-wound. Hand-slotted, drilled, or perforated casings should not be used as well screens. Slotted casing is manufactured from a variety of materials, including PVC and stainless steel.

Slot openings are designated by numbers that correspond to the widths of the openings in thousandths of an inch (e.g., number 10 slot refers to 0.010-inch slot size). The slots have a consistent width for the entire wall thickness of the casing, which can result in clogging if

irregularly shaped formation particles are brought through the screen during well development and sampling.

The continuous-slot, wire-wound screen has a greater area per opening per length and diameter than is available with any other screen type. The percentage of open area in continuous-slot screen is often more than twice that provided by standard slotted well screen. The triangular shaped wire makes these screens non-clogging. They are fabricated in PVC and a variety of metals and are used when high pumping rates are anticipated.

If a monitoring well will also be used for hydraulic testing, the well screen open area should equal or exceed the formation's effective porosity so that the screen is not the limiting factor in formation hydraulic testing. In most cases, this amount of open area can only be achieved through the use of continuous-slot wire-wound well screen. In choosing between types of well screens, another factor is the speed and effectiveness of well development. Screens with a high percentage of open area greatly reduce the time and effort required for well development.

The bottom of the screen must be sealed by an endcap consisting of the same material as the screen. The use of a sediment sump or trap below the well screen is not appropriate for monitoring wells.

In the case of wells deeper than 150 feet deep, schedule-80 PVC will be used to minimize the potential for casing blistering when grout cures. The diameter of the screen and casing will be a maximum of 4-inches less than the diameter of the borehole. Stainless steel centralizers will be placed at the top and bottom of the well screen and every 40 feet along the blank casing. The bottom of each well will consist of a slip cap mounted with stainless steel screws to a flush-threaded end-cap. Holes of 1/16-inch diameter will be drilled through both caps prior to installation to prevent water from sitting in the bottom of the well if the static water level drops below the bottom of the well. A locking cap or dedicated pump assembly will be used to secure the top of the well.

4.3 Decontamination of Casing and Screen Materials

During the production of PVC casing, a wax layer can develop on the inner wall of the casing; protective coatings may also be added to enhance casing durability. Considerable quantities of oils and solvents are used during the manufacturing and machining of threads during the production of steel casing. All of these represent potential sources of chemical interference and must be removed either with a laboratory-grade nonphosphate solution or by steam cleaning

prior to installation. Factory cleaning of casing and screen in a controlled environment by standard detergent washing, rinsing, and air-drying procedures is superior to any cleaning efforts attempted in the field. Factory cleaned and sealed casing and screen can be certified by the supplier.

4.4 Filter Pack and Well Screen Design

A properly designed monitoring well requires that a well screen be placed opposite the zone to be monitored and be surrounded by materials that are coarser and of greater hydraulic conductivity than the natural formation material. Naturally developed wells and wells with artificially introduced filter pack are the two basic types of well intake designs for unconsolidated or poorly consolidated materials.

4.4.1 Naturally Developed Wells

In naturally developed wells, the formation materials are allowed to collapse around the well screen. Naturally developed wells can be installed in which natural formation materials are relatively coarse grained, permeable, and of uniform grain size. It is essential that the grain-size distribution of the formation to be monitored is accurately determined by conducting a mechanical (sieve) analysis of samples taken from the interval to be screened. After sieving, a plot of grain size versus cumulative percentage of sample retained on each sieve is made. Well screen slot sizes are based on the grain-size distribution, specifically the effective size (the sieve size that retains 90 percent of the formation material, referred to as D10) and the uniformity coefficient (the ratio of the sieve size that retains 40 percent of the material or D60, to the effective size). A naturally developed well can be justified if the effective grain size is greater than 0.010 inch and the uniformity coefficient is greater than 3.0. Various state agencies (e.g., the California Department of Toxic Substances Control [DTSC]) recommend that an artificial filter pack be used if sieve analysis indicates that a screen slot size of 0.020 inches or less is required to retain 50 percent of the natural formation. The biggest drawback for naturally developed wells is the time required for well development to remove fine-grained formation material.

4.4.2 Artificial Filter-Packed Wells

Filter packs are installed to create a permeable envelope around the well screen. The use of an artificial filter pack in a fine-grained formation material allows the screen slot size to be considerably larger than if the screen were placed in the formation material without the filter

pack. The selection of the filter pack grain size should be based on the grain size of the finest layer to be screened.

Filter pack grain size and well screen slot size should be determined by the grain size distribution of the formation material. The filter pack should be designed first. It is recommended to use a filter pack grain size that is three to five times the average (D50) size of the formation materials. However, this method may be misleading in coarse, well-graded formation materials. Another way to determine filter pack grain size is to take the D30 grain size of the formation materials and multiplying it by a factor of between three and six, with three used if the formation is fine and uniform and six used if the formation is coarse and non-uniform. For both methods, the uniformity coefficient of the filter pack materials should be as close to 1.0 as possible (2.5 maximum) to minimize particle size segregation during filter pack installation.

The filter pack should extend from the bottom of the well screen to approximately two to five feet above the top of the screen to account for settlement of the pack material during development and to act as a buffer between the well screen and the annular seal. A secondary filter pack (transitions sand) is sometimes used to prevent annular grout seal materials from migrating into the primary filter pack. The secondary filter pack should extend at least one foot above the top of the primary filter pack. It should consist of a uniformly graded fine sand with 100 percent passing a No. 30 U.S. Standard sieve and less than 2 percent by weight passing the 200 sieve.

Filter pack thickness must be sufficient to surround the well screen but thin enough to minimize resistance to the flow of fine-grained formation material and water into the well during development. American Society of Testing and Materials (ASTM), Designation D 5092-90, recommends that a minimum of two-inch thick filter pack between the borehole well and the well casing (ASTM 1995).

The materials comprising the filter pack should be as chemically inert as possible. It should be comprised of clean quartz sand or glass beads. Filter pack materials usually come in 100-pound bags; these materials are washed, dried, and factory packaged.

The size of well intake openings can only be selected after the filter-pack grain size is specified. The slot size should be such that 90 to 100 percent of the filter-pack material is held back by the well screen.

The casing string should be installed in the center of the borehole. This will allow the filter-pack materials to evenly fill the annular space around the screen and ensure that annular seal materials

fill the annular space evenly around the casing. If a hollow-stem auger or dual-tube rig is used, the auger or inner tube of the dual tube will adequately centralize the casing string. For other types of drilling, centralizers should be used to ensure the casing string is positioned in the center of the borehole. Centralizers are typically expandable stainless steel metal or plastic that attach to the outside of the casing and are adjustable along the length of the casing. Centralizers are generally attached at the bottom and immediately above the well screen and at 10- or 20-foot intervals along the casing to the surface.

Methods for filter pack emplacement include gravity (free-fall), tremie pipe, reverse circulation, and backwashing. The latter two techniques are not commonly used for monitoring well construction, since they require the introduction into the borehole of water from a surface source.

Gravity emplacement is only possible in relatively shallow wells with an annular space of more than 2 inches, where the potential occurrence of bridging is minimized. Bridging can result in the occurrence of large unfilled voids in the filter pack or the failure of filter pack materials to reach their intended depth. Gravity emplacement may also cause filter pack gradation. Additionally, formation materials from the borehole wall can become incorporated into the filter pack, potentially contaminating it.

With the tremie emplacement method, the filter pack is poured or slurried into the annular space adjacent to the well screen through a rigid pipe, usually 1.5 inches in diameter. Initially the pipe is positioned so that its end is at the bottom of the annulus. If the filter pack is being installed in a temporarily cased borehole (hollow-stem auger , dual-tube percussion, or air rotary casing hammer) the temporary casing is pulled to expose the screen as the filter-pack material builds up around the well screen. In unconsolidated formations the temporary casing should only be pulled out one to two feet at a time to prevent caving. In consolidated or well-cemented formations or in cohesive unconsolidated formations, the temporary casing may be raised well above the bottom of the borehole prior to filter pack emplacement. For deep wells and/or non-uniform filter pack materials, the filter pack may be pressure fed through a tremie pipe with a pump. Emplacement should be continuously monitored with a weighted measuring tape accurate to the nearest 0.1 foot to determine when the filter pack has reached the desired height. After reaching the desired height, the well should be surged for 10-15 minutes, then checked for settling. Add more filter pack as necessary. Record the volume of filter pack used and check against calculated volume of annular space. Most well designs also employ a “secondary” filter pack (transition sand) above the primary filter pack for purposes of reducing bentonite seal and grout migration into the primary filter pack. If applicable, care must be taken that the filter pack materials are not

installed into a hydrostratigraphic unit above or below the specific zone that is targeted for monitoring.

4.5 Annular Seal

Proper annular seal formulation and placement results in the complete filling of the annular space and envelopes the entire length of the well casing to ensure that no vertical migration can occur within the borehole.

Annular seal materials may include bentonite, neat cement grout, or variations of both. Typically, a bentonite seal from 2 to 5 feet thick is emplaced immediately above the filter pack. The use of bentonite as a sealing material depends on its efficient hydration following emplacement. Expansion of bentonite in water can be on the order of eight to 10 times the volume of dry bentonite. This expansion causes the bentonite to provide a tight seal between the casing and the adjacent formation and between the grout and filter pack. Bentonite is available as pellets, granules, chips, chunks, or powder. The dry bentonite should be less than one-fifth the width of the annular space between casing and borehole (ASTM 1995). If the bentonite seal will be above the saturated zone, several gallons of clean water must be poured down the annulus to begin the hydration process. A minimum of 30 minutes should pass to allow for hydration before additional annular seal materials are placed above the bentonite. Bentonite pellets having a coating to slow the hydration process are not recommended as they have been found to contain chemicals that may impact water quality.

Powdered bentonite is generally made into a grout slurry to allow emplacement as a bentonite seal. This grout slurry is prepared by mixing about 15 pounds of a high-solids, low-viscosity bentonite with seven gallons of water to yield one cubic foot of grout. Once the grout is mixed, it should remain workable for 15 to 30 minutes. During this time the grout is pumped through a tremie pipe with a mud or grout pump. Once in place, the bentonite grout requires a minimum of 24 hours to strengthen. In water with a high total dissolved solids (TDS) content (>5,000 parts per million [ppm]) or a high chloride content, the swelling of bentonite is inhibited.

A neat cement is commonly used to seal the remainder of the annulus. Neat cement is made up of one 94-pound bag of Portland cement and six gallons of water. The water used to mix the neat cement should be clean with a TDS less than 500 ppm. Bentonite powder is often added to neat cement to improve workability and reduce slurry weight and density and to reduce grout shrinkage. The proportion of bentonite by volume should be three to five percent.

The cement-bentonite grout should be mechanically blended in an aboveground rigid container and pumped through a tremie pipe to within a few inches of the bottom of the space to be sealed. This allows the grout to displace groundwater and loose formation materials up the hole. The end of the tremie pipe should always remain in the grout without allowing air spaces. After emplacement, the tremie pipe should be removed immediately. The grout should be placed in one continuous mass before initial setting of the cement or before the mixture loses its fluidity.

Cement is a highly alkaline substance (pH from 10 to 12) and introduces the possibility of altering the chemistry of the water it contacts. Thinner slurries may infiltrate an unprotected filter pack. After a borehole annulus is filled with grout a sample of water may be obtained and the pH determined in the field. A pH reading of 12 or higher may indicate an invasion of cement grout into the well.

4.6 Surface Completions

Two types of surface completions are common for groundwater monitoring wells: aboveground and flush-mounted. Aboveground completions are preferred wherever practical. The primary purpose of either type of completion is to prevent surface runoff from entering and infiltrating down the annulus of the well, and to protect the well from accidental damage or vandalism. The surface seal may be an extension of the annular seal installed above the filter pack, or a separate seal emplaced atop the annular seal.

For aboveground completions, the drilling subcontractor will construct a concrete apron (3 feet x 3 feet x 0.5 feet) around each well. A protective steel casing fitted with a locking cover is set into the uncured concrete apron. Concrete aprons will be crowned to provide positive runoff away from the well. Concrete pads may be constructed within three days after wells have been installed. If necessary steel guard posts 4-inches in diameter and filled with concrete will be installed around the pads. Posts will be five feet long and will have a stickup of 2.5 feet above ground surface and 2.5 feet below ground surface. In a flush-to-ground surface completion, a water-tight monitoring well Christy box or its equivalent is set into the cement surface seal before it has cured. This type of completion is used in high-traffic areas. A low, gently sloping mound of cement will discourage surface runoff. A locking well cap must be used to secure the inner well casing.

5.0 REFERENCES

American Society of Testing and Materials (ASTM). 1995. Standard Practice for Design and Installation of Ground Water Monitoring Wells in Aquifers, Designation D 5092-90.

BASIC REMEDIATION COMPANY
STANDARD OPERATING PROCEDURES
BMI COMMON AREAS
CLARK COUNTY, NEVADA

SOP-03

GROUNDWATER MONITORING WELL DEVELOPMENT

STANDARD OPERATING PROCEDURES

SOP-03
GROUNDWATER MONITORING WELL DEVELOPMENT

TABLE OF CONTENTS

Section **Page**

1.0 INTRODUCTION 1

2.0 DEFINITIONS 1

3.0 RESPONSIBILITIES 2

4.0 WELL DEVELOPMENT 2
- 4.1 General 2
  - 4.1.1 Decontamination 2
  - 4.1.2 Documentation 2
  - 4.1.3 Calculating Purge Volume 3
- 4.2 Development Methods 5
  - 4.2.1 Bailing, Surging, and Pumping 5
  - 4.2.2 Overpumping and Backwashing 8
  - 4.2.3 Compressed Air 8
  - 4.2.4 Developing Wells with Floating Product 8
  - 4.2.5 Developing Wells in Tight Formations 9

LIST OF FIGURES

Figure 1 Bottom Discharge Bailer 6
Figure 2 Surge Block 7
Figure 3 Submersible Pump 7

LIST OF ATTACHMENTS

Attachment 1 Monitoring Well Development/Sampling Form
Attachment 2 Volume Charts

DISCLAIMER

THE FOLLOWING STANDARD OPERATING PROCEDURE PROVIDES GENERAL GUIDANCE FOR BRC CONTRACTORS FOR TECHNICAL ISSUES ADDRESSED DURING ENVIRONMENTAL SITE INVESTIGATION AND REMEDIATION ACTIVITIES. IT IS NOTED, HOWEVER, THAT EACH SITE IS UNIQUE AND THESE GUIDELINES ARE NOT A SUBSTITUTE FOR COMMON SENSE AND GOOD MANAGEMENT PRACTICES BASED ON PROFESSIONAL TRAINING AND EXPERIENCE. IN ADDITION, INDIVIDUAL CONTRACT TERMS MAY AFFECT THE IMPLEMENTATION OF THIS STANDARD OPERATING PROCEDURE. BRC CONTRACTORS RESERVE THE UNRESTRICTED RIGHT TO CHANGE, MODIFY OR NOT APPLY THESE GUIDELINES IN THEIR SOLE, COMPLETE, AND UNRESTRICTED DISCRETION TO MEET CERTAIN CIRCUMSTANCES, CONTRACTUAL REQUIREMENTS, SITE CONDITIONS, OR JOB REQUIREMENTS.

1.0 INTRODUCTION

The goal of monitoring well development is to remove fines and drilling fluid residue from the gravel pack and the natural formation in the vicinity of the screened interval, thus assuring good communication between the aquifer and the well. Well development assures that a sample collected will be a true representative of the quality of water moving through the formation.

The well development process is composed of the following:

- The application of sufficient energy in a monitoring well to create groundwater flow reversals (surging) in and out of the well and the gravel pack to release and draw fines into the well
- Pumping or bailing to draw drilling fluids out of the borehole and adjacent natural formation, along with fines that have been surged into the well.

2.0 DEFINITIONS

Fines	Silt, clay, fine sand.
Parameters	Groundwater variables (i.e., pH, specific conductivity, temperature, turbidity).
Annulus	The gap between the well and borehole where the sand, seal, and grout are installed.
Saturated Annulus	The portion of the annulus that is below the aquifer.
Drilling Fluid	Any fluid the driller may have added during the drilling of the borehole.
Purge Water	Any water removed from the well via bailing, pumping, or airlift.
Drawdown	Distance between the static water level and water level while the well is being pumped or bailed at a constant rate.
Bridge	A wedge or buildup of sand that occurs when the driller is pouring the sand pack around the screened interval, thus leaving a gap or "open zone" where the natural formation could possibly clog the screen.
Yield	The rate at which a well will produce water.

3.0 RESPONSIBILITIES

The **Project Manager** or **Task Leader** (a qualified Nevada Certified Environmental Manager [C.E.M.]) will select the site-specific development methods, with input from the site geologist or hydrogeologist and Field Team Leader, and will maintain close supervision of the activities and progress.

The **Field Team Leader/Geologist** implements the selected development program and assists in the selection of development methods.

The **Field Technician/Staff** carries out the actual well development.

4.0 WELL DEVELOPMENT

4.1 General

The following general guidelines are applicable to well development regardless of method.

4.1.1 Decontamination

Every effort must be made to avoid outside contamination and the cross-contamination of monitoring wells. This can best be done by ensuring that all equipment to be introduced into a well is clean. The level of effort for decontamination is a site- and project-specific issue to be resolved individually for each project.

4.1.2 Documentation

A critical part of monitoring well development is recording significant details and events in either a field logbook or on a well development log (Attachment 1). It is important that the following details be documented.

- Well identification number
- Installation date
- Date and time of development
- Quantity of drilling fluid lost during well installation
- All photoionization detector (PID) readings (Note: see SOP-39 for additional information on PID principles and procedures.)

- Measured well depth (pre-development and post-development)
- Water level
- Height of water column
- Pumping rate and water level drawdown (if applicable)
- Recharge rate (poor, good, excellent)
- Periodic parameter readings
- Sample observations
- Type of equipment used
- Total amount of water removed
- Completion time

4.1.3 Calculating Purge Volume

The minimum number of gallons to be removed must be calculated before the development process begins.

Information needed to calculate purge volume:

- Total depth of well (TD)
- Measured static water level (WL)
- Screen length (SL)
- Well casing inner diameter (ID)
- Borehole Diameter (BD)
- Number of gallons of water used during well drilling/construction
- Number of feet of filter pack installed above the screen, if the standing water column (SWC) is longer then the screen length

To calculate one well volume:

- Calculate the standing water column (SWC). TD - WL = SWC.

- Use a well volume chart (Attachment 2) to find a multiplier in the volume per linear foot column that coincides with the well's ID.

- SWC times ID multiplier equals gallons of water in one well volume

To calculate one annulus volume (two options):

Option 1 (if the SWC is shorter than the screen length):

- Portion of saturated annulus equals SWC

- Use a volume chart to find a multiplier in the volume per linear foot column that coincides with the well's BD

- BD multiplier minus ID multiplier equals annulus multiplier

- Feet of saturated annulus times annulus multiplier times 30 percent (assumed porosity) equals gallons of water in one annulus volume

Option 2 (if the SWC is longer than the screen length):

- Portion of saturated annulus is equal to the screen length plus the number of feet of sand above the top of the screen

- Use a volume chart to find a multiplier in the volume per linear foot column that coincides with the well's BD

- BD multiplier minus ID multiplier equals annulus multiplier

- Feet of saturated annulus times annulus multiplier times 30 percent (assumed porosity) equals gallons of water in one annulus volume

To calculate the minimum gallons to be removed:

- Well volume plus annulus volume plus number of gallons lost during well drilling/construction equals one purge volume

Example for the Development of a 4-inch Well

The Well Construction Log notes that the borehole diameter is 10.25 inches, the screen is 15 feet long, and the driller used 75 gallons of water during well construction. Measured with a water level indicator, the static water level is 59.45 feet. Measured with a well tagger, the well depth is 71.21 feet.

Record in logbook, TD = 71.25 feet
WL = 59.45 feet

TD - WL = SWC
Logbook, SWC = 11.8 feet

From Chart 1 (Attachment 2), the gallons per linear foot multiplier for a 4-inch well is 0.66. Thus, 11.8 × 0.66 = 7.79 (gallons of water in one well volume).

Logbook, one well volume = 7.79 gallons

From Chart 2 (Attachment 2), the gallons per linear foot for a 10.25-inch borehole is 4.29. Therefore, 4.29 (BD multiplier) minus 0.66 (ID multiplier) equals 3.63 (annulus multiplier). Thus, 11.8 × 3.63 × 30 percent = 12.89 (gallons of water in one annulus volume).

Logbook, one annulus volume = 12.89 gallons
drilling fluid lost = 75 gallons

7.79 (one well volume) plus 12.89 (one annulus volume) plus 75 (fluid lost) equals 95.7 gallons (one purge volume). The work plan states that a minimum of three well volumes must be removed during development. Additional water may need to be purged to allow the parameters to stabilize and the water to clear up.

Logbook, one purge volume = 95.7 gallons
95.7 × 3 = 287 (minimum number of gallons to be purged).
Logbook, minimum gallons to be purged = 287 gallons

4.2 Development Methods

4.2.1 Bailing, Surging, and Pumping

In relatively clean, permeable formations where water flows freely into the borehole, bailing, surging, and pumping is an effective development technique. The bottom of the well is first tagged to measure the amount of sand and silt before and after surging. Then a bailer (Figure 1) is lowered into the well to clean out any fines that have settled on the bottom. Then a surge block (Figure 2), approximately the same diameter as the well casing, is used to agitate the water, causing it to move in and out of the screen, which draws in fines from the gravel pack and surrounding formation, and breaks up any bridges that may have formed during the placement of the gravel pack. After surging for a few minutes (depending on the height of the water column and length of screen), the bailer is again lowered to clean out any fines that were drawn into the casing as a result of surging. This surge/bail technique should continue until minimal fines are

being pulled out with the bailer. A submersible pump (Figure 3) is then lowered down the well. Pumping should begin at the top of the saturated portion of the screened interval to prevent sand locking. The pump should be lowered at intervals of five feet or less until the pump is resting approximately one foot from the bottom of the casing. The water level must be monitored continuously during the first few minutes of pumping to prevent drawing the water level below the pump intake and breaking the suction. If possible, the discharge flow rate should be increased until the well is pumping at its maximum yield without a drawdown beneath the pump.

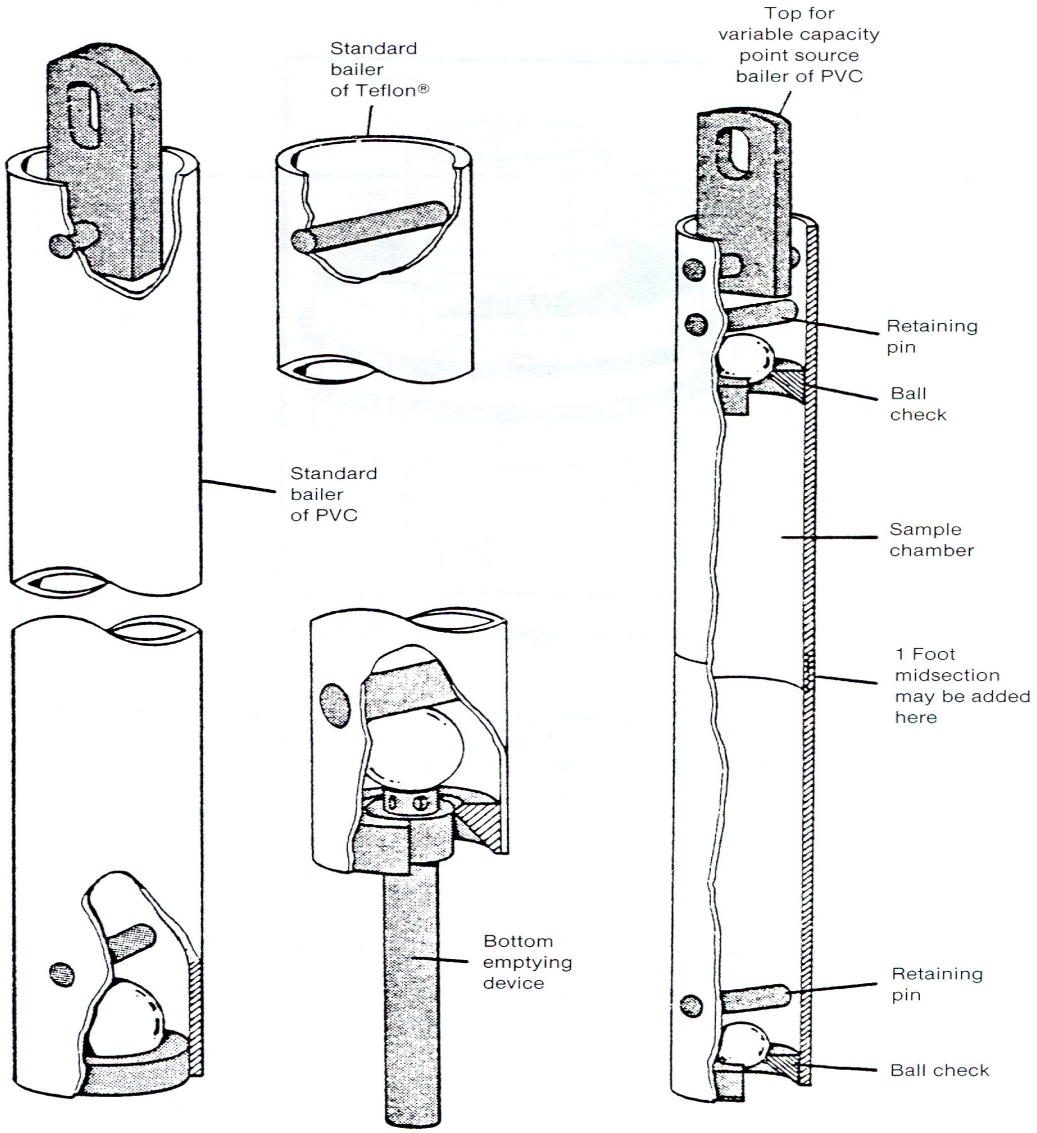

Figure 1 Bottom Discharge Bailer

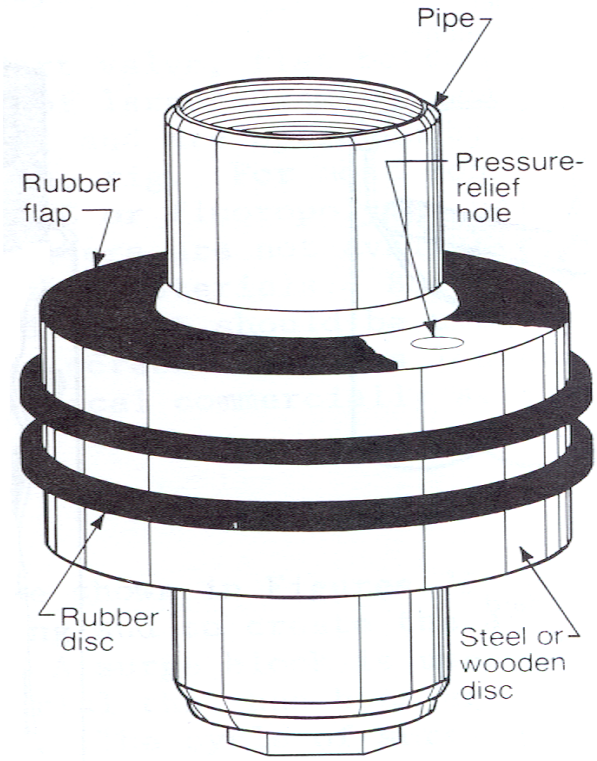

Figure 2 Surge Block

Figure 3 Submersible Pump

4.2.2 Overpumping and Backwashing

Wells may be developed by overpumping (pumping or bailing the well at a rate that exceeds the ability of the formation to deliver water) and then reversing the flow direction (backwashing) so that the water is passing from the well into the gravel pack and formation. This back and forth movement of water through the well screen and gravel pack removes fines from the formation immediately adjacent to the well, while preventing bridging (wedging) of sand grains. Backwashing can be accomplished by several methods including pouring water into the well and then bailing, or forcing water into the well under pressure through a water-tight fitting. Care should be taken when backwashing not to apply too much pressure, which could damage or destroy the well screen. Where no backflow prevention valve is installed, a pump can be alternately started and stopped. This starting and stopping allows the column of water that is initially picked up by the pump to be alternately dropped and raised in a surging action. This surge tends to loosen the bridging of the fine particles, drawing them into the well where they are pumped out.

4.2.3 Compressed Air

Compressed air can be used to develop a well by either backwashing or surging. Backwashing forces water out through the screens, using increasing air pressure inside a sealed well, then releases the pressurized air to allow the water to flow back into the well. Care should be taken when using this method so that the water level does not drop below the top of the screen, thus reducing well yield. Surging, or the "open well" method, consists of alternately releasing large volumes of air into an open well below the water level to produce a strong surge by virtue of the resistance of water head, friction, and inertia. The well is subsequently pumped using the air lift method.

4.2.4 Developing Wells with Floating Product

It is important to disturb the formation as little as possible in wells that contain floating product. Surge blocks should not be used as they may smear the screen and the casing when the block is being withdrawn, potentially leaving evidence of product and increasing the risk of faulty data. Product wells should be developed using a bail/pump method. A bailer should be lowered gently into the well, without agitating the water column, to remove any fines that have settled on the bottom. If the well produces sufficient water, a pump is lowered into the well and pumping started at a slow flow rate. The product/water level is manually monitored constantly for the first few minutes to prevent the product level from coming within 2 feet of the pump intake. Pumping

is continued until at least the quantity of drilling fluid lost has been purged, the parameters have stabilized, and the discharge water is visibly clear.

4.2.5 Developing Wells in Tight Formations

Developing low-yield wells is a very lengthy process; the amount of time spent developing a low yield well is project-specific and should be resolved individually for each project. For wells installed in clay or fine-grained silt, the method of development should be bailing only. Surging of such wells has been found to substantially increase the turbidity of the water and does not significantly improve hydraulic well response. These wells should be bailed dry and a record kept of the time it takes for the well to recharge 80 percent.

ATTACHMENT 1

MONITORING WELL DEVELOPMENT/SAMPLING FORM

Basic Remediation COMPANY

MONITORING WELL DEVELOPMENT/LOW-FLOW PURGE/SAMPLING FORM

Page __of__

PROJECT: _____

Well ID: _____
Date: _____
Sample ID: _____
Time: _____
Analyses: _____
QA/QC - Dup ID: _____
Rinsate ID: _____
MS/MSD ID: _____

Screened Interval (ft): _____
Pump Intake Depth (ft): _____
Ave. Flow Rate (gpm/Lpm) _____
Purging/Sampling Device: _____
PID Reading at TOC: _____
Water Level Instrument: _____
Water Quality Meter(s): _____

Well Diameter (in) _____
Static Water Level (ft): _____
Total Well Depth (ft): _____
Water Column Length (ft): _____
Minimum Purge Volume: _____
Well Secure - yes/no _____
Samplers Name (Print) : _____

Time	Volume Purged (gal/L)	Flow Rate (gpm/Lpm)	Water Level (feet - TOC)	Specific Conductance ( )	pH	Temp	DO (mg/L)	ORP (mV)	Turbidity (NTU)	Salinity	TDS
			± 0.1 ft	5%	± 0.1	± 1°C	±10%	±10%	±10% or <10 NTU	%	
	Final Field Parameter Measurements										

Comments: _____

ATTACHMENT 2
VOLUME CHARTS

Chart 1 — Volume of PVC Casing

Schedule	Diameter (inches)	OD (inches)	ID (inches)	Volume/LF (gallons)
40	1.25	1.660	1.380	0.08
40	2	2.375	2.067	0.17
40	3	3.500	3.068	0.38
40	4	4.500	4.026	0.66
40	6	6.625	6.065	1.50
40	8	8.625	7.981	2.60
40	12	12.750	11.938	5.82
80	2	2.375	1.939	0.15
80	4	4.500	3.826	0.60
80	5			0.00

Chart 2 — Volume of Open Borehole and Annulus Between Casing and Hole

Hole Diameter	Volume/Linear Feet of Hole		Nominal Casing Diameter	4.2.5.1 Volume/Linear Feet of Annulus	
(inches)	(gallons)	(cubic feet)	(inches)	(gallons)	(cubic feet)
7.25	2.14	0.29	1.3	2.08	0.28
7.25	2.14	0.29	2.0	1.98	0.26
7.75	2.45	0.33	2.0	2.29	0.31
8.25	2.78	0.37	2.0	2.61	0.35
10.25	4.29	0.57	2.0	4.12	0.55
8.25	2.78	0.37	3.0	2.41	0.32
10.25	4.29	0.57	3.0	3.92	0.52
12.25	6.12	0.82	3.0	5.76	0.77
8.25	2.78	0.37	4.0	2.12	0.28
10.25	4.29	0.57	4.0	3.63	0.49
12.25	6.12	0.82	4.0	5.47	0.73
12.25	6.12	0.82	6.0	4.65	0.62

BASIC REMEDIATION COMPANY
STANDARD OPERATING PROCEDURES
BMI COMMON AREAS
CLARK COUNTY, NEVADA

SOP-04

AQUIFER TESTING METHODS

STANDARD OPERATING PROCEDURES

SOP-04
AQUIFER TESTING METHODS

TABLE OF CONTENTS

Section **Page**

1.0 INTRODUCTION 1

2.0 DEFINITIONS 2

3.0 RESPONSIBILITIES 6

4.0 AQUIFER TESTING METHODS 7
- 4.1 Slug Testing 8
  - 4.1.1 The Principle - Slug Testing 8
  - 4.1.2 Assumptions and Limitations of Slug Testing 8
  - 4.1.3 Slug Insertion (Falling Head) Approach 9
  - 4.1.4 Slug Withdrawal (Rising Head) Approach 9
  - 4.1.5 Selection of the Slug 10
  - 4.1.6 Required Equipment 11
  - 4.1.7 Personnel Requirements 12
  - 4.1.8 Slug Insertion Test Methods 12
  - 4.1.9 Slug Withdrawal Test Methods 14
- 4.2 Overview of Pumping Tests 16
  - 4.2.1 The Principle - Pumping Tests 16
  - 4.2.2 General Assumptions and Limitations for Pumping Tests 16
  - 4.2.3 Pumping Test Method Selection 17
  - 4.2.4 Equipment Requirements 18
  - 4.2.5 Personnel Requirements 21
- 4.3 Step-Tests 21
  - 4.3.1 Design of the Step Test 21
  - 4.3.2 Step-Testing Methods 22
- 4.4 Constant Rate Pumping Tests 24
  - 4.4.1 Design Considerations for Constant Rate Pumping Tests 24
  - 4.4.2 Constant Rate Pumping Test Methods 27
- 4.5 Recovery Tests 29
  - 4.5.1 The Principle - Recovery Tests 30
  - 4.5.2 Recovery Test Methods 30
- 4.6 Data Analysis Methods 30
  - 4.6.1 Slug Testing Data Analysis Methods 31
  - 4.6.2 Step Drawdown Test Methods 31
  - 4.6.3 Constant Rate Pumping Tests and Recovery Tests Methods 31
  - 4.6.4 Computer-Aided Aquifer Analysis 31

5.0 REFERENCES 32

LIST OF FIGURES

Figure 1 Different Types of Aquifers....4
Figure 2 Hydraulic Components of Aquifer Studies....5
Figure 3 Time Drawdown and Residual Drawdown....6
Figure 4 Components of Slug Testing....9
Figure 5 Aquifer Test Data Form....19
Figure 6 Conceptual Pumping Test Monitoring Array....25

DISCLAIMER

THE FOLLOWING STANDARD OPERATING PROCEDURE PROVIDES GENERAL GUIDANCE FOR BRC CONTRACTORS FOR TECHNICAL ISSUES ADDRESSED DURING ENVIRONMENTAL SITE INVESTIGATION AND REMEDIATION ACTIVITIES. IT IS NOTED, HOWEVER, THAT EACH SITE IS UNIQUE AND THESE GUIDELINES ARE NOT A SUBSTITUTE FOR COMMON SENSE AND GOOD MANAGEMENT PRACTICES BASED ON PROFESSIONAL TRAINING AND EXPERIENCE. IN ADDITION, INDIVIDUAL CONTRACT TERMS MAY AFFECT THE IMPLEMENTATION OF THIS STANDARD OPERATING PROCEDURE. BRC CONTRACTORS RESERVE THE UNRESTRICTED RIGHT TO CHANGE, MODIFY OR NOT APPLY THESE GUIDELINES IN THEIR SOLE, COMPLETE, AND UNRESTRICTED DISCRETION TO MEET CERTAIN CIRCUMSTANCES, CONTRACTUAL REQUIREMENTS, SITE CONDITIONS, OR JOB REQUIREMENTS.

1.0 INTRODUCTION

Accurate estimates of the hydraulic properties of an aquifer are a fundamental component of the site characterization process. This Standard Operating Procedure (SOP) details four aquifer test methods that are commonly implemented to help characterize an aquifer, and evaluate the performance characteristics of a pumping well. Aquifer parameters can be estimated by employing either *in situ* or *ex situ* methods. *Ex situ* methods involve collecting soil samples and testing in a geotechnical lab.

- Slug Tests
- Pumping Tests
  - Step-Tests
  - Constant Discharge Tests
  - Recovery Tests

In situ methods involve determining the hydraulic characteristics of the aquifer by applying a stress to the aquifer and recording the response to that stress through time. This guideline only considers *in situ* testing. These data can then be used in standard well flow equations to determine the hydraulic parameters of the aquifer and the pumping well. Because *in situ* methods involve testing a larger portion of the aquifer, they are generally considered more accurate than *ex situ* (laboratory) soil permeability testing. Furthermore, the process of collecting a soil sample inadvertently changes the soil matrix somewhat.

Each method has certain applications, effort requirements, costs, risks, and limitations. These factors must be evaluated based on the project goals, design requirements, long-term planning, budget, schedule, and regulatory concerns. Additionally, aquifer testing may be conducted in several phases involving one or more of the methods. This iterative approach may be very effective as the aquifer testing program can be tailored to meet the project needs as the site characterization or basin study evolves.

Aquifer tests are typically conducted during the site investigation, although they may be performed at any phase of the closure process. A great deal of care must be given to data collection methods and data analysis for aquifer tests, as the findings will subsequently be used for long-term resource planning, engineering design, and capitol expenditures. The findings from an aquifer testing program may ultimately be used for several important purposes, including the following:

- The development of the site conceptual hydrogeologic model. Aquifer testing provides a mechanism to quantify and incorporate aquifer parameters into the conceptual model.
- Input to analytical solutions such as Darcy's Equation for calculation of groundwater seepage velocity.
- Parametric data for input to numerical groundwater flow models and associated solute transport models.
- Use in the development of groundwater extraction scenarios for hydraulic containment and/or groundwater contaminant mass removal.
- Use in wellhead protection studies, determination of the zone of influence and zone of contribution for production wells, and other groundwater basin studies.

2.0 DEFINITIONS

Various physical properties and hydraulic parameters of aquifers and aquitards appear in the equations that describe groundwater flow, and are therefore significant in aquifer testing studies. A working understanding of the hydraulic principles involved in aquifer testing is an essential component of aquifer analysis. A brief definition of terms that are used in this aquifer testing SOP are therefore provided below:

Hydraulic Conductivity — A constant of proportionality that describes fluid flow through a porous media (see Darcy's Law, below). Hydraulic conductivity (K) is a function of the permeability of the media and of the physical properties of the fluid. Hydraulic conductivity has the units of length/time. In a groundwater setting, the physical properties of the water are considered relatively constant, and therefore hydraulic conductivity can be considered a function of the porous media. For this reason, the terms permeability and hydraulic conductivity are often used interchangeably for groundwater settings. It is important to note that hydraulic conductivity varies over 13 orders of magnitude for earth materials (Freeze and Cherry, 1979).

Darcy's Law — States that the rate of flow through a porous medium is proportional to the loss of head, and inversely proportional to the length of the flow path, or

$$\text{(eq. 1)} \qquad v = K(dh/dl)$$

where,

v	=	Q/A, which is the specific discharge, also known as the Darcy velocity or Darcy flux, (length/time)
Q	=	the volume rate of flow (length3/time)
A	=	the cross sectional area normal to flow direction (length2)
dh/dl	=	describes the aquifer hydraulic gradient (length/length)
K	=	describes the hydraulic conductivity, detailed above

Equation 1 may be rewritten as:

$$\text{(eq. 2)} \qquad Q = K(dh/dl)A$$

It is noted that the specific discharge is in velocity units of length/time. It is important to note this is a macroscopic concept, and must be differentiated with microscopic (real) flow velocities, which consider the porosity of the medium, as

$$\text{(eq. 3)} \quad V = \frac{K(dh/dl)}{n}$$

where "n" is the effective porosity of the media, and V is the “seepage” velocity.

Transmissivity (T)

The product of the hydraulic conductivity (K) and the aquifer thickness (b).

$$\text{(eq. 4)} \qquad T = Kb$$

Transmissivity may vary significantly due to spatial variations in both the thickness and conductivity of the aquifer. Transmissivity carries the units length^2/time. For confined aquifers, b is the thickness of the confined zone. For unconfined aquifers, b is the thickness of the saturated portion of the aquifer.

Total Head

The sum of the elevation head, the pressure head, and the velocity head at any given point in an aquifer.

Potentiometric Surface

An imaginary surface connecting points to which water would rise in cased wells from a given point in an aquifer (Lohman, 1979). It may be above or below the ground surface. The water table is a particular potentiometric surface for unconfined aquifers. "Potentiometric" is preferable to the term "piezometric" used by many in the past (Figure 1).

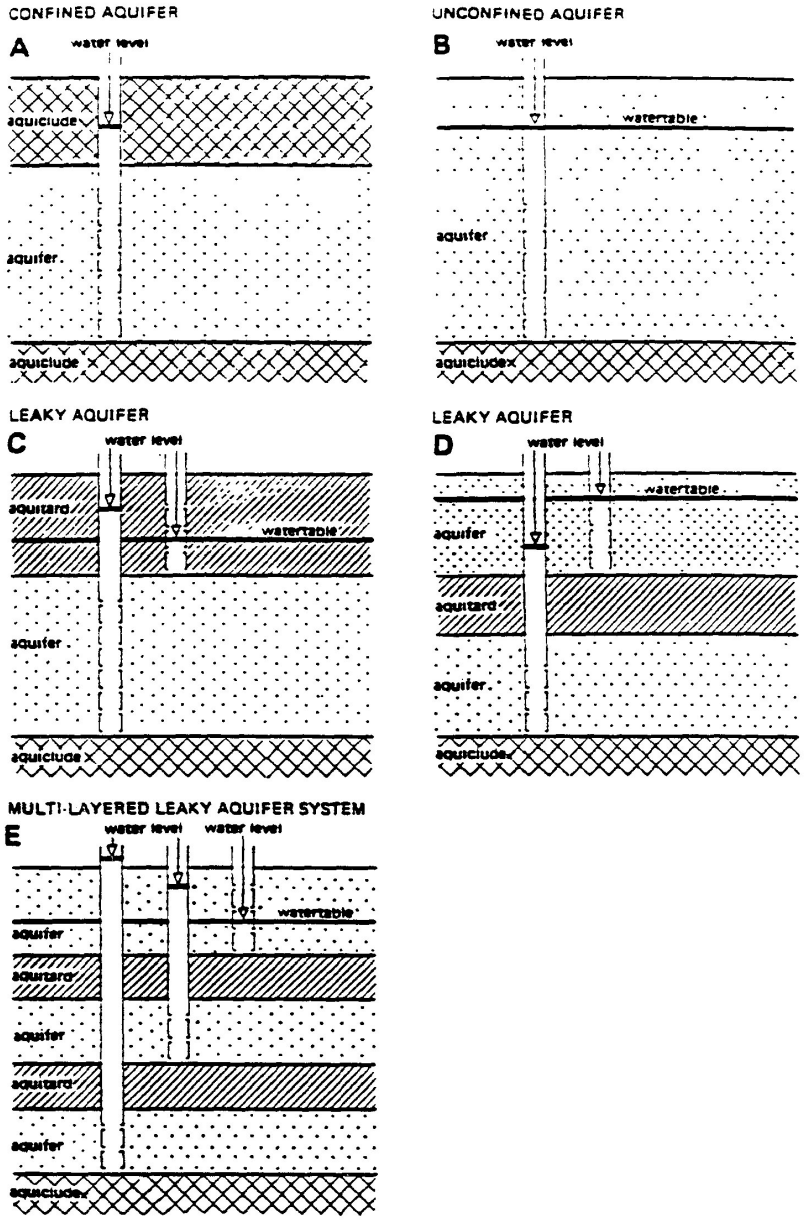

Figure 1.1 Different types of aquifers
A. Confined aquifer
B. Unconfined aquifer
C. and D. Leaky aquifers
E. Multi-layered leaky aquifer

Figure 1 Different Types of Aquifers
(after Kruseman and de Ridder, 1991)

Storativity	The storativity of a confined aquifer is the volume of water released from storage per unit surface area per unit decline in head. For confined aquifers, stored water is released via aquifer compression and expansion of water. In an unconfined (water table) aquifer, the storativity is equivalent to the specific yield. Also known as the storage coefficient. The storativity is dimensionless and typically ranges from 5×10^{-5} to 5×10^{-3} (Kruseman and de Ridder, 1991).
Specific Yield	The specific yield is the volume of water released from an unconfined aquifer from storage per unit surface area of the aquifer per unit decline in the water table. Also known as the unconfined storativity, effective porosity, or drainable pore space. The specific yield is unitless and typically ranges from 0.01 to 0.3 (Kruseman and de Ridder, 1991).
Static Water Level	The non-pumping, stabilized water level in a cased well. Usually recorded in the field as depth to water below a datum such as the top of casing (TOC). This term is usually reported in feet mean sea level.
Specific Capacity	The specific capacity is defined as the discharge rate per unit length of drawdown for a pumping well. Typically expressed in gallons per minute (gpm) per foot of drawdown.
Drawdown	The amount of water level decline in a well and aquifer due to pumping. Usually measured and reported in terms of feet of drawdown relative to static (non-pumping) conditions (s' by convention) (Figure 2).

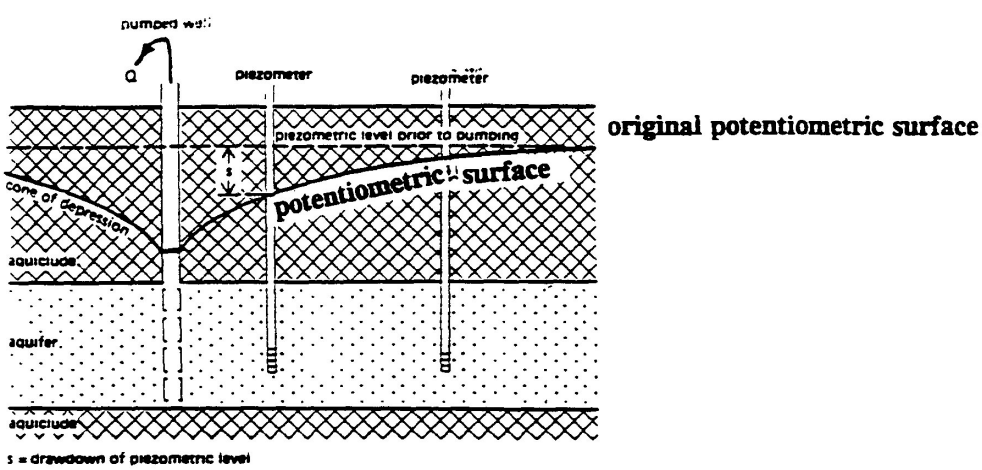

Figure 2 Hydraulic Components of Aquifer Studies
(after Kruseman and de Ridder, 1991)

Residual Drawdown

Once a pump is shut off during a pumping test, water levels in the pumping well and observation wells or piezometers will rise. This rise in total head results from the principle of superposition, and is commonly known as residual drawdown (s' by convention). It is expressed as the difference between the static water level and the water level at time t' after the cessation of pumping (Figure 3).

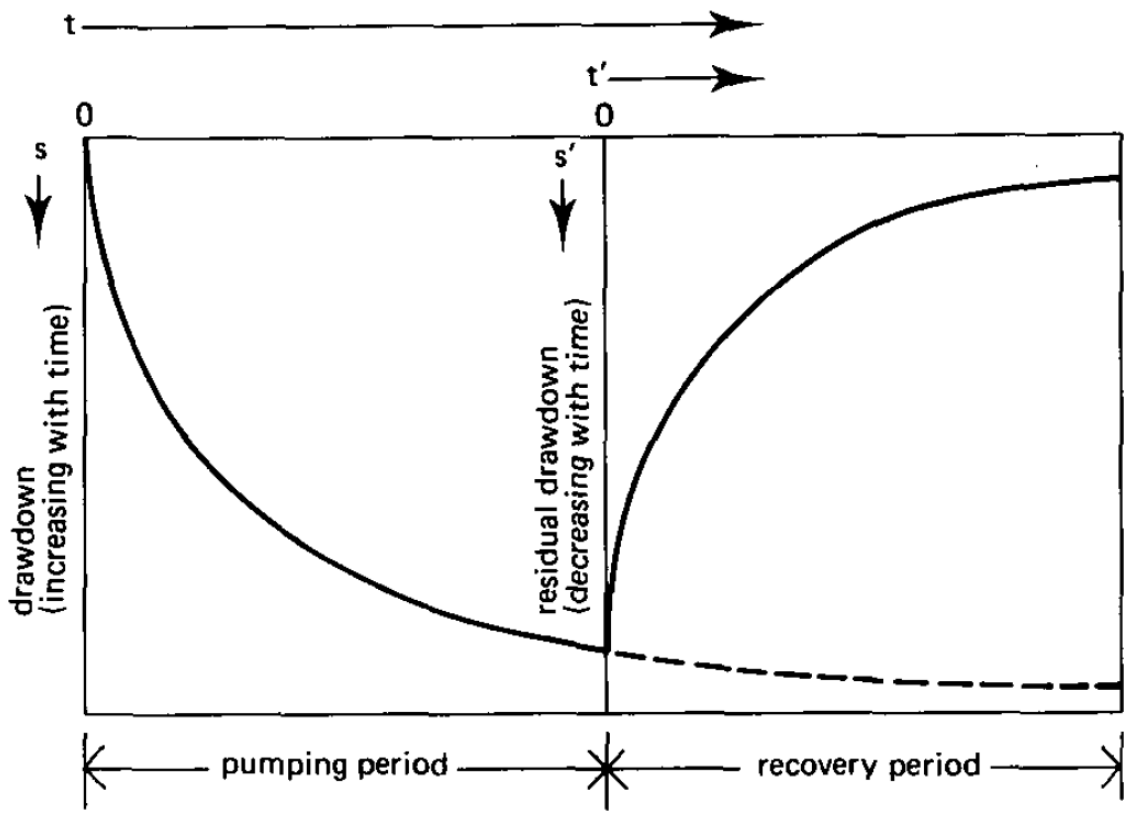

Figure 3 Time Drawdown and Residual Drawdown

3.0 RESPONSIBILITIES

The **Project Manager** or **Task Manager** (a qualified Nevada Certified Environmental Manager [C.E.M.]) is responsible for the following:

- Selecting aquifer testing methods (with assistance from the project team)
- The preparation of groundwater pumping and regulatory interaction, appropriate permitting, and treatment of contaminated groundwater (if necessary)
- Coordinating the project team and ensuring access to necessary staffing and equipment resources

The **Project Hydrogeologist** or **Engineer** is responsible for the following:

- Successful completion of the testing program in a technically sound manner
- The design of the testing methods, data acquisition methods, and data analysis
- Having thorough understanding of the site hydrogeology to the extent known
- Having knowledge and extensive experience using field instruments and equipment, such as pressure transducers, continuous data loggers, pumps, flow gauges, and meters
- Having knowledge in the areas of well hydraulics and aquifer mechanics
- Data reduction and analysis using regulatory agency and industry accepted standards of practice.
- Serving as Field Team Leader for pumping tests

The **Field Team Leader/Geologist** is responsible for the following:

- Coordinating logistical aspects of the testing program
- Accurate and precise data collection by all field team members
- Assisting in the design of the aquifer testing program
- Having working knowledge of equipment and instruments used in testing methods implemented

The **Project Staff** assists in data acquisition and data reduction, in designing the aquifer testing method, and with data analysis.

4.0 AQUIFER TESTING METHODS

As noted above, slug tests, step-tests, pumping tests, and recovery tests have different applications and limitations. In general, step-drawdown tests, constant rate pumping tests, and recovery tests that incorporate observation wells require pumping groundwater from an aquifer, and are therefore most feasible for relatively high transmissivity zones, such as alluvial sand and gravel aquifers, or extensively fractured aquifers. In these types of aquifers, a long-term pumping test is the most accurate means of evaluating aquifer properties, and for evaluating other aquifer properties such as boundary conditions, heterogeneity, and anisotropy.

With zones having sufficient transmissivity, pumping rates can be achieved that will create significant drawdown in observation wells. Conversely, pumping tests are less effective, or even infeasible, in units having low transmissivity (e.g., clays and silts) because sufficient extraction rates cannot be achieved. For low transmissive zones, the preferred aquifer test method is a slug test, described below.

4.1 Slug Testing

4.1.1 The Principle - Slug Testing

Slug testing involves introducing or removing a "slug" of known volume into a well and recording the water level changes that result from either the instantaneous insertion or instantaneous withdrawal of the slug. The rate of recovery observed in the well is a function of the hydraulic conductivity of the aquifer and of the well hydraulic properties itself.

4.1.2 Assumptions and Limitations of Slug Testing

Slug tests stress only a small portion of the aquifer adjacent to the well, and therefore, slug tests are incapable of evaluating hydrogeologic boundary conditions, hydraulic anisotropy, storage coefficients, and pumping characteristics of the well. However, slug tests commonly provide a cost-effective means of gathering "point" values for hydraulic conductivity across a large area. Slug tests are commonly considered as a first step in characterizing an aquifer because of the relative low cost and effort requirements. Additionally, slug tests do not generate large volumes of groundwater, and therefore the method is often used to initially characterize water-bearing zones beneath hazardous waste sites, where disposal options of contaminated groundwater may be limited or costly.

It is important to note that slug tests do not provide adequate information regarding the hydraulic characteristics of a pumping well. Additionally, because of the small stress applied to the aquifer, data may be influenced by drilling methods (borehole skin effects), well construction, and development procedures. Slug tests alone cannot provide accurate information regarding boundary conditions, anisotropy, or storage coefficient data, and are therefore not useful for predicting steady-state drawdowns resulting from any given hypothetical pumping scenario. The development of long-term groundwater extraction scenarios, such as in most modeling studies, should therefore not be based solely on slug test data, but require more sophisticated and costly tests such as pumping tests, if feasible.

4.1.3 Slug Insertion (Falling Head) Approach

If a slug is rapidly inserted into the water column in a well, it will instantaneously raise the water column in the well. The amount of head change is defined as the instantaneous head (Ho). The water column will then "fall" to the static water level at a rate that is controlled by the hydraulic characteristics of the water-bearing formation and of the well itself. The slug insertion method is also known as a "falling head" test for this reason (Figure 4).

4.1.4 Slug Withdrawal (Rising Head) Approach

A second approach, the slug withdrawal method, requires submersing the slug in the water column within a well and allowing the water level to stabilize to static conditions. The slug is then rapidly withdrawn from the well. After the slug is withdrawn from the well, the instantaneous water level will be at a level that is lower than the static water level. The rate at which the water levels recover to static water levels is a function of the aquifer properties and of the well itself. This method is also known as a "rising head" test (Figure 4).

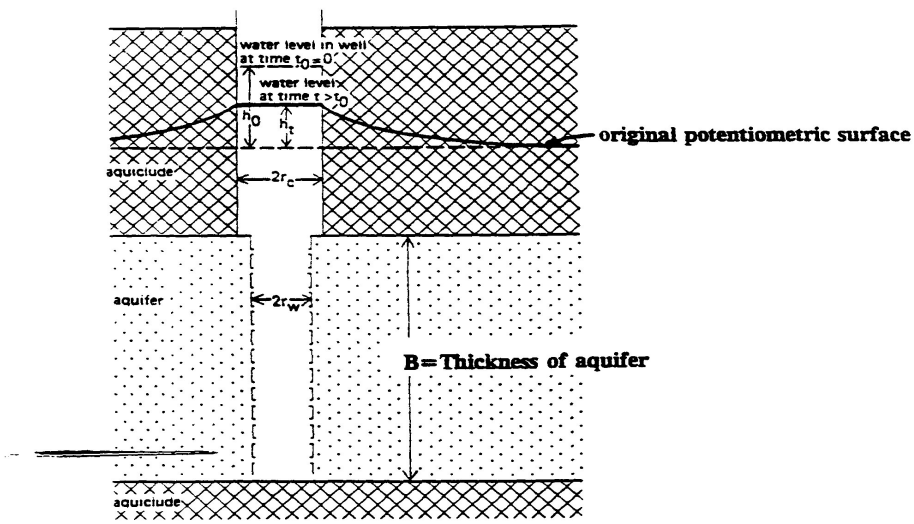

geometry of slug insertion (falling head) method

r_w= radius of well r_c=radius of casing

h_o= instantaneous drawdown from slug at time = 0

note: geometry for slug withdrawal (rising head test) differs only slightly from the above diagram for slug insertion method. For a slug withdrawal test, at time = T_o, the H_o value will be below the original (static) water level, i.e., geometry for rising head is a mirror image of a falling head test.

Figure 4 Components of Slug Testing

Both methods can be used in series during a slug testing program. The slug insertion method may be followed by the slug withdrawal with relative ease. However, if a slug insertion method is chosen for unconfined aquifers, groundwater will be displaced above the water table and into the unsaturated sand filter pack of the well and the formation itself. It is noted that the hydraulic conductivity of the soils overlying the water-bearing zone may differ from those of the aquifer.

Additionally, hydraulic conductivity of unsaturated soils varies as a function of moisture content. For these reasons, only the slug withdrawal method should be used in unconfined or semiconfined aquifers. If the static water level is within the screened interval of the well that is being tested, a slug withdrawal method should be chosen for aquifer analysis.

4.1.5 Selection of the Slug

Several different types of slugs may be used for the test, including:

- Solid (blank) polyvinyl chloride (PVC) pipe filled with sand and fitted with an eye bolt at one end to affix a bailing line
- Stainless steel or Teflon™ bailers
- A slug of water of known volume

Introduction of a slug of water (usually distilled, organic-free water) may not be feasible due to regulatory restrictions. In addition, it is generally considered infeasible to "instantaneously" withdraw a slug of water using a pump. The withdrawal of a slug of water is limited to the use of bailers. The most common slug test involves the use of solid pipes (either slug insertion or withdrawal methods) or use of bailers (slug withdrawal only).

An additional slug testing method involves applying a pressure or vacuum to the well head and measuring changes in water levels that result following the removal of the pressure. This method requires specialized well fittings, generators, and compressors. Details of the method are provided in Kruseman and de Ridder (1991) (Oscillation Method, p.238), and are not included in this SOP.

The remainder of this SOP focuses on slug tests conducted using a solid slug, although the general methods for slug tests analyses do not vary significantly if other types of slugs are used for the test.

A large slug will stress the aquifer to a greater degree than a small slug, and therefore the size of the slug should be maximized based on field conditions. Three-foot Teflon bailers or sections of

solid pipe can be threaded together to optimize slug volume. The size of the slug is limited only by the standing water column in the well and physical limitations in one's ability to instantaneously insert or withdraw the slug.

4.1.6 Required Equipment

Slug. Solid pipe may be used for slug insertion or withdrawal. Bailers may be used for slug withdrawal only. The slug volume should be maximized based on field conditions. Different length slugs capable of threading together should be brought to the field to provide flexibility to the program. A typical slug used for a 2-inch diameter monitoring well may be 1.5 inches in diameter and 6 to 10 feet in length. The volume of the slug used for each test must be recorded in the field notes.

Bailing Line. Used for rapidly lowering and raising the slug into the water column. Deep wells may require the use of the winch on a smeal rig.

Water Level Indicator. Instrument used for measuring static water levels. A conductivity-based water level indicator capable of measuring to 0.01-foot accuracy is required.

Pressure Transducer. Device installed in the well below the slug that is capable of continuously providing very accurate water level measurements. The transducer will be connected to a continuous data logger (described below). Transducers are available in different pressure (and accuracy) ranges. Higher pressure range transducers are less accurate than lower pressure range transducers. The transducers should never be lowered into a water column below the operating pressure range of the transducer. As a rule, a multiplier of 2.3 can be used to estimate the maximum total amount of water above a traducer, i.e., a 10-psi transducer can have 23 feet of water above, a 50-psi transducer can have 106 feet of water above, etc. For example, if a 10-psi traducer is installed at the bottom of the well with 100 feet of water above it, it will no longer function properly, and must be returned to the manufacturer for recalibration.

The transducer only needs to record the change in water levels imparted by the slug, and therefore should be installed immediately below the total depth of the slug. A 10-psi transducer is capable of measuring up to 23 feet of change in water levels to 0.01-foot accuracy, and is the recommended transducer for slug tests. Transducers should never be lowered to the bottom of the well because they operate improperly if lowered into sediment. The target depth of the traducer should be identified prior to lowering into the well, and the traducer cable marked with duct tape to ensure that the transducer is not lowered too deep.

Data Logger. This device is a small field computer capable of recording a wide range of physical measurements such as pressures, temperatures, electrical conductivities, and flow. For aquifer analysis, we are generally interested in recording pressure (feet of water in the well). The data logger converts the pressure value sent by the traducer into feet of water above the traducer, and records the values in its memory. The data can then be downloaded from the logger to personal computer.

It is noted that each traducer has specific parameters that must be input to the data logger to make the appropriate conversions from pressure units to feet. The person operating the data logger must be properly trained and have sufficient experience with the instruments to eliminate compromising or even loss of slug test data. The owner's manual must be consulted before using.

Common models are the Hermit 3000 (multi-channel, very user friendly), Hermit 2000, and Hermit 1000 (2-channel, less friendly), and most recently the mini-TROLL, which is a combination logger and transducer.

Duct Tape. Used to affix the transducer cable to an immobile object such as the top of the well casing.

Health and Safety Equipment. Based on the requirements of the facility health and safety plan. Decontamination of all down-hole equipment must follow site-specific decontamination procedures.

4.1.7 Personnel Requirements

Slug testing generally requires a two-person team. One person prepares and rapidly inserts or withdraws the slug and collects water level measurements manually. The second person operates the field instruments, and double -checks the quality of the data.

Background conditions that may influence water levels during the test, such as weather conditions, nearby soil vapor extraction systems, or groundwater extraction systems, should be evaluated. Monitoring of water levels in a background monitoring well that is screened in a representative water bearing unit should be performed.

4.1.8 Slug Insertion Test Methods

1. Remove the well head expansion cap and allow the well to equilibrate to atmospheric conditions.

2. Record the static water level using a conductivity-based water level indicator. Sound the well. Note potential sediment at bottom.

3. Determine the appropriate depth of 10-psi traducer. This will generally be between 10 and 20 feet below the static water level, or above potential sediment at bottom of shallow wells. Affix duct tape to traducer cable to indicate the target depth below TOC.

4. Lower a 10-psi transducer to the target depth. The transducer and transducer cable must hang plumb in the well to minimize entanglement with the slug. Duct tape the transducer cable to an immovable object such as the TOC, Christy box, or stovepipe. Allow the well to equilibrate to static water levels.

5. Connect the pressure transducer to a continuous data recorder. Input the required transducers parameters and other test parameters in the data logger (consult manual). The data logger will typically ask whether you wish to record water levels below the TOC or surface. Surface refers to a static water level datum. This means that when the instrument is "referenced", it is "zeroed" to the static water level, and will therefore measure changes relative to static water level. Water levels above static water levels will be recorded as positive, and water levels below static will be recorded as negative values. The slug test requires only measuring the change in head associated with slug insertion or withdrawal. ***The "surface mode" is therefore the desired data logger "mode" for slug testing.*** TOC refers to measuring the absolute value (i.e., total head) of the water level relative to the TOC datum. This unnecessary step may introduce error in the field, and is therefore not recommended for slug testing. An accurate record of all input parameters and field observations must be included in a field aquifer test log.

6. "Zero" the pressure traducer/data logger to static water levels. Confirm static levels with a water level indicator. At this point, you are nearly ready to begin the test. The data logger should be set to begin the test in the "immediate" mode (i.e., no time delay). The data logger should be set to record water levels as frequently as possible within the first couple of minutes (the "log" mode is recommended).

7. Affix a bailing line to the slug. To accurately complete the test, the slug will require complete submersion in the well. Record the volume of the slug in the field log. Determine the total depth required to submerse the slug. A piece of duct tape may be used to identify the desired length. One person should handle the slug, and one person should handle the data logger. The slug should be lowered to a "ready" position immediately above the static water level. The slug must not be tangled with the transducer cable.

8. ***This is the critical step***. On a predetermined count, one person must rapidly (but gently) ***lower*** the slug to total submersion while the second person triggers the data logger to begin recording water levels. The slug must remain motionless once it has been lowered into the well. The bailing line for the slug must be tied to an immovable object (e.g., truck tailgate) once the slug is submerged. It is recommended that the data logger be allowed to complete its logarithmic data recording cycle (approximately 2-3 minutes) prior to confirming water levels with a water level indicator. Wells screened within low to moderately transmissive aquifers may require from 30 seconds to several minutes or even hours to recover to static water levels. If the well recovers within a few seconds, it is likely that the well is screened

within a moderate to high transmissivity zone, and therefore the slug test method is likely not an appropriate test method for determination of aquifer properties.

9. The slug injection test is completed when the water level recovers to 90 to 100 percent of static water levels. In many instances, the final few tenths of a foot of recovery may require a significant amount of time (hours). The field team should use their best judgment regarding when to terminate the test. For nearly all methods of data analysis, the last data points are as significant as the initial data points, and the validity of the tests should not be compromised due to impatience of field team members. In many cases, the team can be setting up the next test on a different well while the previous well completes its recovery.

10. Once the well has equilibrated to 90 to 100 percent (or nearly 100 percent) of static water level, the test can be terminated by stopping the data logger. However, at this time, it would be advantageous to initiate a slug withdrawal test (see item No. 4 below). This may be accomplished by either "stopping" the insertion test, or "stepping" the test by using the "Step" function of the data logger. The original input parameters remain unchanged if you choose to use the "Step" function or stop and start function. Both methods involve restarting the "log cycle" for the data logger (highly desirable for the early time data). An accurate record of test numbers and step numbers must be included in the field logs.

4.1.9 Slug Withdrawal Test Methods

1. Remove the well head expansion cap and allow the well to equilibrate to atmospheric conditions.

2. Record the static water level using a conductivity-based water level indicator. Sound the well. Note potential sediment at bottom.

3. Determine the appropriate depth of a 10-psi traducer. This will generally be between 10 and 20 feet below the static water level, or above potential sediment at bottom of shallow wells. Affix duct tape to traducer cable to indicate the target depth below TOC.

4. Lower a 10-psi transducer to the target depth. The traducer and traducer cable must hang plumb in the well to minimize entanglement with the slug. Duct tape the transducer cable to an immovable object such as the TOC, Christy box, or stovepipe. Allow the well to equilibrate to static water levels.

5. Connect the pressure transducer to a continuous data recorder. Input the required transducers parameters and other test parameters in the data logger. The data logger will typically ask whether you wish to record water levels below the TOC or surface. Surface refers to a static water level datum. What this means is when the instrument is "referenced", it is "zeroed" to the static water level, and will therefore measure changes relative to static water level. Water levels above static water levels will be recorded as positive, and water levels below static will be recorded as negative values. The slug test requires only measuring the change in head associated with slug insertion or withdrawal. ***The "surface mode" is therefore the desired data logger "mode" for slug testing.*** TOC refers to measuring the absolute value (i.e., total head) of the water level relative to the TOC datum. This unnecessary step may introduce

error in the field, and is therefore not recommended for slug testing. An accurate record of all input parameters and field observations must be included in a field log.

6. Lower the slug into the water column so the slug is fully submerged. For this test, tie the slug bailing line to an immovable object and allow slug to remain motionless in the well. Ensure that the slug is not entangled with the transducer or transducer cable.

7. Allow the well to equilibrate to the static water level. The well will recover most quickly if a bailer is used for the slug. A solid pipe slug will require a longer recovery period. Verify that the well has equilibrated to static water level with a water level indicator.

8. ***This is the critical step.*** On a predetermined count, one person must rapidly (but gently) ***retrieve*** the slug from the well while the second person simultaneously triggers the data logger to begin recording water levels. Remove the slug from the well while making sure not to disturb the transducer cable. As stated above, it is recommended to allow the data logger to complete its logarithmic data recording cycle (approximately 2-3 minutes) prior to confirming water levels with a water level indicator. Wells screened within low to moderately transmissive aquifers may require from 30 seconds to several minutes or hours to recover to static water levels. If the well recovers within a few seconds, it is likely that the well is screened within a moderate to high transmissivity zone, and therefore the slug test method is likely not an appropriate test method for determination of aquifer properties.

It is recommended that two slug tests be conducted for each well for data verification purposes. Most data loggers will allow the user to view the data or even download the data to a field printer or field PC. Data should be reviewed in the field following completion of the test to ensure that the transducers and data logger are functioning properly.

The initial head values (Ho) that result from instantaneous withdrawal or injection of the slug should be evaluated against the maximum theoretical drawdown. This can easily be completed by calculating the volume of the slug and converting volume of the slug to volume of water in a well. The well volume can then be converted to feet of water in the well column. The following is an example calculation:

Hypothetical slug size:	1.5-inch outer diameter (OD) x 120-inch length = 212.1 cubic inches (in.^{3})
Conversion to gallons:	212.1 in.^{3} x (0.004329 gallons/in.^{3}) = 0.92 gallons
Conversion to feet (assumes a 2-inch inner diameter (ID) well):	0.92 gallons x (1 foot/0.16 gallons) = 5.75 feet

Therefore, using a slug that is 1.5 inches in diameter and 120 inches (10 feet) in length, the maximum anticipated change in water level with respect to static levels (Ho) would be 5.75 feet. This should be evaluated against the maximum head change observed in the field. Significantly different (greater than 20 to 30 percent) values may indicate that the transducers or data loggers

are not functioning properly. Other possibilities are that the slug is not being inserted or withdrawn rapidly enough, or that the timing between the "trigger" operator and the "slug" operator is off. These factors should be evaluated and resolved prior to conducting additional slug tests.

One way to avoid timing problems at the start of the test is to set the logger monitoring before the test at 10-second intervals, and then have it automatically increase the duration of the interval. However, be sure that the data logger has enough memory to handle the quantity of data.

Data loggers generally have sufficient memory to record an entire day of slug testing. The data logger should be downloaded daily to minimize the risk of losing the slug testing data. An electronic and hard copy should be kept for records.

4.2 Overview of Pumping Tests

This section provides details on the elements of pumping tests.

4.2.1 The Principle - Pumping Tests

Several different types of pumping tests can be conducted to determine aquifer properties, although the fundamental principles of all tests are similar. The principle of a pumping test involves applying a stress to an aquifer by extracting groundwater from a pumping well and measuring the aquifer response to that stress by monitoring drawdown as a function of time in the pumping well and/or observation wells or piezometers at known distances from the well. These measurements are then incorporated into an appropriate well-flow equation to calculate the hydraulic characteristics of the aquifer and pumping well.

4.2.2 General Assumptions and Limitations for Pumping Tests

Numerous different types of pumping tests and well-flow equations exist that may be implemented for nearly all hydrogeologic settings. Each method has a different set of limitations and assumptions. For unusual tests and hydrogeologic settings, see Kruseman and de Ridder (1991). Different assumptions and limitations exist for confined, semiconfined (leaky), and unconfined (water-table) aquifers. In general, the following assumptions apply to most well-flow equations and hydrogeologic settings:

- The aquifer is of infinite areal extent.
- The aquifer is of uniform thickness and infinite in areal extent.
- Prior to pumping, the potentiometric surface is horizontal (or nearly so) over the area that will be influenced by the pumping test.
- The aquifer is pumped at a constant discharge rate, or for variable discharge rate tests, the rate is known.
- The pumping well fully penetrates the entire thickness of the aquifer and thus receives water by horizontal flow.

Groundwater and Wells (Driscoll, 1986) provides practical guidelines on how to set up and interpret data from aquifer tests.

4.2.3 Pumping Test Method Selection

The overall approach, including capabilities, limitations and assumptions, for three types of pumping tests—Step Tests (variable discharge tests), Constant Discharge Pumping Tests, and Recovery Tests—is detailed in this section,.

Step Tests. Involves pumping from a single well at a relatively low rate until drawdown has stabilized. The pumping rate is then increased to a higher discharge rate until drawdown again stabilizes. This procedure is continued for at least three steps. Each step is typically 20 to 40 percent greater than the previous step, with a duration of typically 30 minutes to 120 minutes (Kruseman and de Ridder, 1991; Driscoll, 1986).

In general, step-tests are relatively short duration tests that are capable of providing general well performance characteristics and aquifer transmissivity and storativity near the pumping well. A step-test provides specific capacity data, and should always be conducted prior to a long-term pumping test if no previous pumping data for the well exist. Step-tests are generally considered less effective for determining hydraulic anisotropy, leakage between layers, boundary conditions and recharge areas than long-term pumping tests.

Constant Discharge Pumping Test. Involves pumping from a well at a continuous, known, constant discharge rate over an extended period of time. This type of test typically involves monitoring drawdown in several observation wells or piezometers, although the test may also be performed as a single-well test. Long-term, constant discharge pumping tests are the most accurate means of evaluating aquifer hydraulic properties. If properly designed and conducted,

these types of aquifer tests are capable of evaluating transmissivity, storativity, aquifer anisotropy, leakage from overlying or underlying layers, boundary effects, recharge areas, etc. Additionally, well performance characteristics such as well capacity, well yield, and well efficiency may be determined using a constant discharge pumping test.

Recovery Test. Constant discharge tests and step tests should generally be followed by a recovery test. A recovery test measures the residual drawdown (s') following the pumping test. The recovery test provides the data required to calculate the transmissivity of the aquifer, thus providing an independent check on the results of the pumping test while costing very little in terms of the total cost of the pumping test (Freeze and Cherry, 1979; and Kruseman and de Ridder, 1991). A recovery test is invaluable if the pumping test is performed without the use of piezometers or observation wells to evaluate potential borehole storage effects of the pumping well. Additionally, residual drawdowns are more reliable than drawdowns measured during pumping due to difficulties in the field of maintaining absolutely constant discharge from a pumping well (i.e., all pumps have a level of discharge variability). It should be noted that recovery tests may be difficult to evaluate if non-ideal conditions exist in the aquifer-such as leaky or boundary conditions.

4.2.4 Equipment Requirements

Electric Submersible Pump. Must be capable of pumping for extended periods at a constant discharge rate. Discharge pipe or hose should be fitted with a valve to provide the ability to adjust flow. The accuracy of the flow meter along with the operational range must be verified and recorded. Adjusting the discharge rate by adjusting the speed of the pump is less desirable than use of a valve. An exception is the variable-speed 2-inch-OD Grundfos submersible pumps, which are designed for adjustable speed (flow) settings. A shroud is recommended if a 2-inch pump is used in a 4-inch or greater diameter well to ensure long-term cooling of the pump motor. The pump will require a reliable power source.

Flow Gauge. An in-line "turbine type" flow meter is recommended for most moderate to high flow-rate applications. Other means of gauging flow are use of calibrated orifice weirs or orifice bucket (Driscoll 1986; Kruseman and de Ridder, 1991). For low flow applications, a container and stopwatch method may be suitable. The container method requires measuring the time it takes to fill a container of known volume such as large bucket or 55-gallon drum. The flow gauging method should be accurate to +/- 5%.

Water Level Indicator. To be used for measuring static water levels. A conductivity-based water level indicator capable of measuring to 0.01 foot accuracy is required for all hazardous waste field investigations. Manual water level data should always be invoked as a back-up to electronic water levels recorded using pressure transducers and data loggers. Water level data should be recorded on an aquifer test data sheet (Figure 5).

AQUIFER TEST DATA SHEET
from Driscoll, 1986

Page _____

Owner _____ Address _____ County _____ State

Date _____ Company performing test _____ Measured by _____

Well No _____ Distance from pumping well _____ Type of test _____ Test No ____

Measuring equipment _____

Time Data	Water Level Data	Discharge Data	Comments on factors affecting test data
Pump on Date _____ Time _____ (A)	Static water level _____	How Q measured _____	
Pump off Date _____ Time _____ (P)	Measuring point _____	Depth of pump/air line _____	
Duration of aquifer test	Elevation of measuring point _____	Previous pumping? Yes ____ No ____	
Pumping _____ Recovery _____		Duration _____ End _____	

Date	Clock time	Time since pump started t	Time since pump stopped t'	t/t'		Water level measurement	Correction or Conversion	Water level	Water level change s or s'		Discharge measurement	Rate		

Figure 5 Aquifer Test Data Form
(Driscoll, 1986)

Pressure Transducer. This device should ideally be installed in the well above the pumping level. This device is capable of continuously providing very accurate water level measurements. A transducer that is vented to the atmosphere should be used such that it monitors water level head and not changes in barometric pressure. The transducer will be connected to a continuous data logger (described below). Transducers are available in different pressure (and accuracy) ranges. Higher pressure range transducers are less accurate than lower pressure range transducers. The transducers should never be lowered into a water column below the operating pressure range of the transducer. For example, if a 10-psi traducer is installed at the bottom of the well with 100 feet of water above it, it will no longer function properly. As a rule, a multiplier of 2.3 can be used to estimate the maximum total amount of water above a traducer, (e.g., a 10-psi transducer can have 23 feet of water above it, a 50-psi traducer can have 106 feet of water above). Please note, the transducer only needs to record the drawdown resulting from pumping. A 10-psi transducer is capable of measuring up to 23 feet of change in water levels to 0.01 foot accuracy, and is therefore the recommended transducer for all observation wells used in a pumping test network. Transducers will operate improperly if lowered into sediment, and therefore the traducer should never be lowered to the bottom of the well. The target depth of the traducer should be identified prior to lowering into the well. The traducer cable should be marked with duct tape to demark the target depth.

The most accurate (lowest psi rating) transducer should be installed in the well or piezometer with the least anticipated drawdown, i.e., NOT the pumping well. The least accurate traducer (greatest psi rating) should be installed in the pumping well, as it will always show the greatest drawdown.

Data Logger. This device is a small field computer capable of recording a wide range of physical measurements such as pressures, temperatures, electrical conductivities, and flow. The data logger converts the pressure value sent by the traducer into feet of water above the traducer and records the values in its memory. The data can then be downloaded from the logger to a personal computer.

It is noted that each traducer has specific parameters that must be input to the data logger to make the appropriate conversions from pressure units to feet. It is extremely important that the person operating the data logger is properly trained and has sufficient experience with the instruments to eliminate compromise or loss of pumping test data.

Common models are the Hermit 3000, Hermit 2000 (multi-channel, very user friendly), Hermit 1000 (2-channel, less friendly) and their latest model the mini-troll.

Watch. All project team members must have an accurate wrist watch or stop watch. All watches must be synchronized with the time in the data logger prior to starting any pumping test.

Duct Tape. Used to affix the transducer cable to an immobile object such as the top of the well casing.

Health and Safety Equipment. Based on the requirements of the facility health and safety plan. Decontamination procedures should follow the site-specific requirements.

4.2.5 Personnel Requirements

Most pumping tests will initially require a minimum of three people. More staff is generally required for long-term constant rate tests than for step tests and recovery tests, which generally can be completed with two field team members.

One person should be responsible for monitoring the flow gauge and adjusting the discharge rate of the pump, and for ensuring that the data logger is triggered and operating. Other team members should be responsible for taking manual (back-up) water level measurements with a conductivity-based water level indicator.

If the observation wells are located at great distances from one another, or if rapid drawdown is anticipated, it may be advantageous to have several field team members on site to measure and record water levels, particularly during the earlier stages of the test when the most rapid change in water levels is anticipated. As water levels reach a pseudo-steady state, fewer team members will be required.

4.3 Step-Tests

This section provides details of the design and field methodology for completion of a step-drawdown test.

4.3.1 Design of the Step Test

The following design components must be evaluated prior to completion of the step-test:

- *Choice of pumping well.* The well must be fully developed and capable of sustained prolonged pumping. Ideally, the well chosen will be located in the geographic center of the area of interest.

- *Size of pump*. Should be based on the estimated specific capacity, desired total drawdowns, and head requirements. If no previous pumping data are available, development logs or other field observation data should be assessed to aid in sizing the pump.

- *Duration of each step*. Ideally, a step-test will consist of at least three steps of progressively increasing discharge rate, followed by one step for recovery. Each step generally should range from 30 minutes to 2 hours. A step test typically requires one 10-hour field day to complete (assumes no mobilization time).

- *Initial Discharge Rate*. The first step discharge rate should produce approximately 25 percent of the maximum anticipated drawdown estimated from the well specific capacity. If a production well is to be used for the step-test, the initial rate should be approximately 25 percent of the pump capacity. The second step should be approximately 50 percent of the anticipated drawdown and so on. An example is provided below:

Assume: A 100-foot deep well is constructed with a screened interval 80 to 100 feet below TOC. The aquifer is confined. The water column in the well is 50 feet (depth to water is 50 feet below TOC). The pump will be set at 90 feet, allowing 40 feet of water column above the pumping level. The specific capacity is estimated from development data to be approximately 5 gpm per foot of drawdown.

The desired drawdown for the first step is:

$$(0.25)(40 \text{ feet}) = 10 \text{ feet of drawdown},$$

therefore, the desired pumping rate for the first step is:

$$(10 \text{ feet})(5 \text{ gpm/feet of drawdown}) = \textit{50 gpm}$$

The second step would therefore be 100 gpm, the third step would be 150 gpm, etc.

The above calculation does not consider well losses from turbulent flow that will likely occur at higher flow rates. A factor of safety may therefore be incorporated in the design of the discharge rates for each step. Given the above conditions and assumptions, a first step pumping rate may be 40 gpm, a second step 80 gpm, etc. Flexibility in the design of the step-test is recommended due to uncertainties associated with estimating specific capacity and well efficiency. Pumping rates for the second and successive steps should be based on field observations of drawdown vs. discharge rate.

4.3.2 Step-Testing Methods

1. Remove the well head expansion cap and allow well to equilibrate to atmospheric conditions.

2. Record the static water level using a conductivity-based water level indicator. Sound the well. Note potential sediment at bottom.

3. Determine the appropriate depth of the transducer. Generally a 10-psi transducer (capable of measuring 23 feet of head change) or 50-psi transducer (capable of measuring 106 feet of head change) are well suited for step-testing. The transducer should be targeted for a level 3 to 5 feet above the pumping level whenever possible to minimize interference with the pump. Affix duct tape to traducer cable to indicate the target depth below TOC.

4. The pump should be set in the well at the desired pumping level. This is usually the screened interval for shallow wells (<100 feet total depth). For deeper wells, the pumping depth only needs to be greater than the anticipated drawdown. For high volume tests, it may be cost-effective to hire a pumping subcontractor to operate the pumps, discharge lines, etc. Contaminated groundwater discharged from the well may require storage in Baker tanks or treatment prior to disposal. All disposal options and permitting must be in-place prior to conducting the test. A water disposal option should be chosen that does not impinge on the groundwater flow system during the test via infiltration recharge, etc.

5. Lower the transducer to the target depth. The traducer and traducer cable must hang plumb in the well to minimize entanglement with the pump discharge pipe/hose. Duct tape the transducer cable to an immovable object such as the TOC, Christy box, or stovepipe. Allow the well to equilibrate to static water levels.

6. Connect the pressure transducer to a continuous data recorder. Input the required transducers parameters and other test parameters in the data logger. The data logger will typically prompt the user to record water levels below the TOC or surface. Surface refers to a static water level datum. The instrument is therefore "referenced" or "zeroed" to the static water level, and will therefore measure changes relative to static water level (the desired mode for step-testing). Water levels below static water level will be recorded as negative values. The step-test requires only measuring drawdown relative to static (and residual drawdown during recovery, if desired). TOC refers to measuring the absolute value (i.e., total head) of the water level relative to the TOC datum. This unnecessary step may introduce error in the field, and is not recommended for step-tests. An accurate record of all input parameters and field observations must be included in a field log.

7. "Zero" the pressure traducer/data logger to static water levels. Confirm static levels with a water level indicator. At this point, you are ready to begin the test. The data logger should be set to begin the test in the "immediate" mode (i.e., no time delay). The data logger should be set to record water levels as frequently as possible during the first couple of minutes of the test (i.e., using the "log" mode).

8. *STEP #1. This is the critical step*. On a predetermined count, one person must simultaneously trigger the data logger and the pump. The pump operator must quickly stabilize the discharge rate to the desired pumping rate. At the same time, another team member should begin recording water levels as rapidly as possible in the pumping well (every 15 to 30 seconds for the first 5 minutes). It usually helps to have the data table constructed with water level time intervals predetermined. The water level measuring interval may be lengthened to every minute or every five minutes as the test progresses. Field observations suggest that 70-80

percent of the total drawdown for each step will occur within the first 15 to 20 minutes following commencement of pumping. The data recorded by the transducers and data logger can be viewed following completion of the logarithmic data recording cycle (approximately 2-3 minutes). Water levels recorded by the traducer/data logger system should be similar to the manually recorded water levels. It is always beneficial to plot the time and drawdown data in the field to ensure that the pumping rate and the drawdowns are adequate. Allow the test to run until the water level in the pumping well stabilizes to a steady state (or nearly so). This typically requires 30-120 minutes. Field plotting of data is helpful in determining when pseudo-steady state drawdown is achieved.

9. *STEP #2. This is also a critical step.* On a predetermined count, one person must step-up the pumping discharge rate to the desired level (usually by opening a control valve located upstream of the flow gauge), and a second person should restart the "logarithmic data recording cycle" on the data logger. This is easily done using a Hermit 2000 by using the "STEP" function. It is highly desirable to have a third field team member manually record water levels at each "Step."

10. *STEP #3 and STEP #4. Critical Steps.* Repeat item 9. above. Make sure to not draw the water level down to the pumping level. It is more desirable to abbreviate the duration of any step and get accurate recovery data (see item 11, below) than to draw the water level down to the pumping level.

11. *STEP #5. Critical step*. On a predetermined count, simultaneously turn off the pump, "Step" the data logger, and manually record recovery (residual drawdown) data. Continue recording the recovery data until the water level returns to static water levels (or nearly so). The test is completed.

12. *This is a very important step*. Carefully download the data in the logger. Obtain a hard copy and retain a master electronic copy in the records.

4.4 Constant Rate Pumping Tests

Provided below is a detailing of the design and field methodology for the completion of a constant rate pumping test.

4.4.1 Design Considerations for Constant Rate Pumping Tests

Choice of pumping well. The well should be designed as a pumping well, although many monitoring wells have been "converted" to pumping wells for use in a pumping test. In either case, the well must be fully developed and capable of sustained prolonged pumping. Ideally, the well chosen will be located in the geographic center of the area of interest, or in a downgradient location if remediation will involve hydraulic containment and collection downgradient. Nearby observation wells or piezometers are required for distance-drawdown calculations (Figure 6). If an existing pumping well is used in the test, the pumping history of the well should be known.

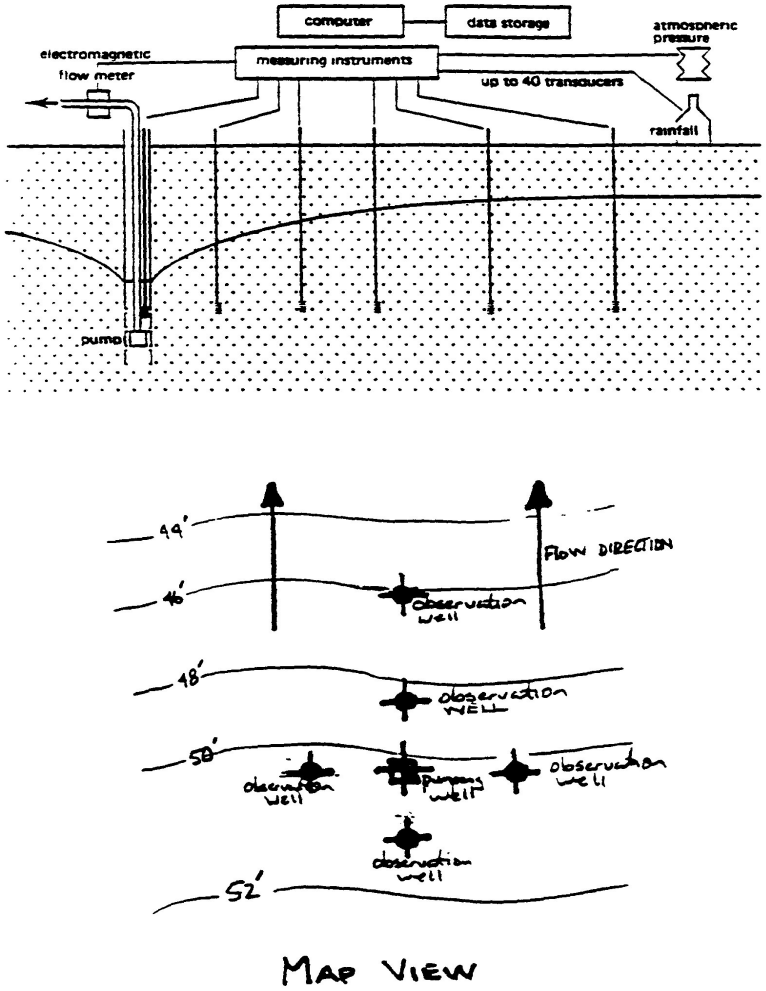

Figure 6 Conceptual Pumping Test Monitoring Array

Choice of observation wells. Ideally, water levels will be monitored in as many nearby observation wells as feasible. Wells screened at different depth intervals should also be monitored to evaluate hydraulic communication across aquitards. It may be advantageous to equip observation wells that are located near the pumping well with continuous data recording instruments, and manually record water levels for wells located at greater distances. Prior to conducting the pumping test, estimated zones of influence may be completed using well-flow equations to determine which wells will likely show a drawdown response. It is beneficial to use observation wells located upgradient, downgradient, and across gradient from the pumping well to evaluate hydraulic anisotropy.

Size of pump. Should be based on the drawdown requirements and estimated specific capacity determined from a step-drawdown test or from actual long-term pumping data. It is considered

inappropriate to conduct a pumping test without completing a step-drawdown test, particularly without existing knowledge of the pumping characteristics of the pumping well.

Constant rate pumping tests that incorporate multiple observation wells may cost several tens or even hundreds of thousands of dollars to complete, in particular when wells are installed as part of the test. Experts should be consulted during the scoping, project planning, and technical design phase to ensure that the test is conducted in a technically sound and cost-effective manner. Key members of the field team should possess extensive experience conducting aquifer tests. The following design components must be evaluated prior to completion of a pumping test:

Duration of Pumping Test - Confined Aquifer. Confined aquifers respond to pumping relatively quickly due to small storativity values. A pumping test for a confined aquifer should be conducted over a period of 24 hours (one day) to achieve steady state conditions. It is noted that there is no fixed time for pumping tests. Preliminary plotting of data in the field may indicate how the aquifer is responding, thus determining the duration of the test.

Duration of Pumping Test - Unconfined Aquifer. The cone of depression that results from pumping expands much more slowly for unconfined aquifers prior to reaching a steady state. The generally accepted minimum duration pumping test for an unconfined aquifer is therefore 72 hours (three days).

Discharge Rate. The discharge rate should be based on the results of the step-drawdown testing program. The specific capacity calculated from the step test should be used to estimate the desired drawdown and pumping rate. Because of the uncertainty in the step test calculations, a level of safety should be factored into the desired drawdown level to ensure that the water level is not drawdown to the pumping level. If the water level is lowered to the pumping level, the test should be terminated immediately (although recovery data should be collected until the aquifer recovers to static conditions).

Frequency of Water Level Measurements. Water levels should be recorded electronically using a continuous pressure transducers and a data logger, and manually using a conductivity-based water level indicator. Following the "logarithmic data recording cycle", the pressure traducer can be set to record water levels initially every minute. Time intervals for manual measurements of drawdown are presented below:

Elapsed Time (minutes)	Time Intervals (minutes)
0-10	0.5
10-15	1
15-60	5
60-120	30
120-end of test	60

Control Points. It is recommended for control purposes that water levels be monitored in a well located at a distance beyond the area of influence of the test. The well must be screened within similar hydrostratigraphic units and the same side of boundaries as wells in the test. It is also recommended to monitor barometric pressure during the test. Data from a local airport or transducer will suffice.

Background Water Level Data. It is useful to monitor water levels in the proposed pumping well and observation wells for a week prior to conducting the pumping test. The background data provides the mechanism to evaluate marine and earth tides, barometric influences, temperature influences, etc.

Background Pumping Data. It is extremely important to understand regional or site-specific groundwater pumping to evaluate well interference, relic drawdown, etc. If a production zone is used for the pumping test, a well canvass should be completed to determine aquifer groundwater uses, and remediation systems, such as nearby soil vapor extraction systems, noted.

Collection of Water Samples. In many cases, groundwater should be collected during the pumping test to gather data required for treatability testing. At a minimum, groundwater should be monitored during pumping for pH, temperature, electrical conductivity, and turbidity.

Miscellaneous. Precipitation events must be recorded in the field notes, including time of onset, duration, and rainfall total. Barometric readings should be checked and recorded hourly. For shallow zone wells, the passing of heavy equipment or trains should be noted on the field logs. For tidal aquifers, a tidal gauge should be included in the study. Continuous recording of tidal levels is strongly recommended to assess tidal influences of the test.

4.4.2 Constant Rate Pumping Test Methods

The description of the pumping test outlined below assumes several observation wells will be used in the test. Continuous data logging equipment should be used wherever possible, although manual backup measurements should also be taken periodically. All of the data loggers should

be synchronized to the correct day, date, and time. All project team members must synchronize their watches to the correct time datum.

1. Remove the well head expansion cap from all observation wells and piezometers, as well as the pumping well. Allow all wells to equilibrate to atmospheric conditions.

2. Record the static water level using a conductivity-based water level indicator. Sound the well. Note potential sediment at bottom.

3. Determine the appropriate depth of the traducer for the pumping well. A 50-psi transducer (capable of measuring 106 feet of head change) is well suited for the pumping well. The transducer should be targeted for a level 3 to 5 feet above the pumping level whenever possible to minimize interference with the pump. In some instances, installation of the transducer below the pump may be required. Care must be taken to not entangle the transducer with the pump, or to lower the transducer into sediment at the bottom of the well. Affix duct tape to traducer cable to indicate the target depth below TOC.

4. The pump should be set in the well at the desired pumping level. This is usually the screened interval for shallow wells (<100 feet total depth). For deeper wells, the pumping depth only needs to be greater than the anticipated drawdown (it is wise to be conservative and consider a margin of error). It may be cost-effective to hire a pumping subcontractor to operate the pumps, discharge lines, etc., especially for high flow-rate, long-term tests. Contaminated groundwater discharged from the well may require storage in portable tanks or treatment prior to disposal. All disposal options and permitting must be in place prior to conducting the test. A water disposal option should be chosen that does not impinge on the groundwater flow system during the test via infiltration recharge, etc.

5. Lower the transducer to the target depth in the pumping well. The traducer and traducer cable must hang plumb in the well to minimize entanglement with the pump discharge pipe/hose. Duct tape the transducer cable to an immovable object such as the TOC, Christy box, or stovepipe. Allow the well to equilibrate to static water levels.

   Install pressure transducers in all of the monitoring wells included in the test in a manner similar to that described above. In nearly all applications, a 10-psi traducer (highly accurate over a 23-foot range) is ideal for monitoring drawdown in observation wells.

6. Connect the pressure transducers that have been installed in each well to a continuous data recorder. A single, multi-channel data logger may suffice if observation wells are near one another, or several "remote" loggers may be required for wells separated by great distances. Input the required transducer parameters and other test parameters in the data logger per the specification in the manual. The data logger will typically prompt the user to record water levels below the TOC or surface. Surface refers to a static water level datum. The instrument is therefore "referenced" or "zeroed" to the either a static water level or to a value input by the operator. Water levels below static water level will be recorded as negative values. For pumping test purposes, water levels can be recorded relative to either "TOC" or "surface." Referencing to "surface mode" minimizes mistakes in the field. Additionally, nearly all data reduction techniques evaluate drawdown, not absolute water levels.

An accurate record of all input parameters and field observations must be included in a field log.

7. "Zero" the pressure traducer/data logger to static water levels (or, alternatively, enter the TOC value for each well). Confirm static levels (or TOC-adjusted values) with a water level indicator.

   All data loggers must be synchronized to a common day-date-time (plus/minus 15 seconds). Because all loggers are synchronized, it is not necessary to trigger each logger simultaneously. Remote data loggers may not show an immediate drawdown response, and it is acceptable to trigger these loggers prior to starting the pump and simply allow them to run. An alternative is to set each logger on the "delayed start mode" set to begin at a predetermined time (i.e., when the pump is started). Field experience indicates that this requires an extremely high level of coordination and timing.

   For the pumping well and for observation wells close by the pumping well, it is advantageous to record the early time data at frequent intervals. This is best accomplished using the "logarithmic data recording mode" for each traducer, with manual triggering of each data logger at the time the pump is started. This may require a project team member per well at the beginning of the test.

8. ***TEST START-UP. This is the critical step. Once the pump is started, there is no going back.*** On a predetermined count, one person must simultaneously start the pump and stabilize the discharge rate to the desired gpm (determined from a step test). As drawdown increases, the required pumping head also increases and the pump control will have to be adjusted accordingly. Other project team members must simultaneously trigger the data loggers not yet running. At the same time, another team member should begin recording water levels as rapidly as possible in the pumping well (see frequencies above). It helps to have the data table constructed with water level time intervals predetermined. The data recorded by the transducers and data logger can be viewed following completion of the logarithmic data recording cycle (approximately 2-3 minutes). Water levels recorded by the transducer/data logger system should be similar to the manually recorded water levels. It is beneficial to plot the time and drawdown data in the field to ensure that the pumping rate and the drawdowns are adequate.

   The first couple of hours of the pumping test can be very hectic. It is recommended that "more" rather than "less" project team staff be on site to assist in the early stages of the test. The size of the field team can be greatly reduced following the initial few hours of the test.

9. *Monitoring Water Levels and Discharge Rates.* Water levels should be monitored on the frequency detailed above. The discharge rate should be monitored at least every 30 to 60 minutes, and recorded on a field log.

4.5 Recovery Tests

A recovery test should always be completed following either a step-test or a constant rate pumping test. As stated above, a recovery test is invaluable if the pumping test is performed

without the use of piezometers or observation wells to evaluate potential borehole storage effects in the pumping well. Additionally, residual drawdowns are more reliable than drawdowns measured during pumping due to difficulties in the field of maintaining absolutely constant discharge from a pumping well. However, if the aquifer conditions are not ideal, the recovery solution is less accurate and difficult to evaluate.

4.5.1 The Principle - Recovery Tests

When the pump is shut down following a pumping test, water levels in the pumping well and observation wells will begin to rise. This rise is known as residual drawdown, s' (Figure 3). As with other types of aquifer tests, the relationship between discharge rate, time, and drawdown measured during the step test can be used in well-flow equations and corresponding "recovery equations" to determine the aquifer transmissivity and storage coefficient, and well characteristics.

4.5.2 Recovery Test Methods

1. Complete a step-test or constant rate pumping test in the manner detailed above.

2. ***This is the critical step***. On a predetermined count, simultaneously turn off the pump, "Step" the data logger, and manually record recovery (residual drawdown) data. The early time data should be recorded using the "log" data recording mode (high data logging frequency). Continue recording the recovery data until the water level returns to static water levels (or nearly so). The test is completed.

3. *This is an important step*. Carefully download the field data to a PC computer. Obtain a hard copy and a master electronic copy to be stored in project records.

4.6 Data Analysis Methods

This SOP has focused on the actual conduct of aquifer tests. However, it is also important for the project team to determine which methods will be used for data analysis prior to completion of the test in the field. Many aquifer analysis methods have assumptions that may limit or even invalidate the use of certain types of aquifer test methods. A brief list of test methods is provided below, although please note that numerous other methods are available. Experts should be consulted in the design phase (not after the field program) for technically difficult or potentially risky aquifer studies (nearly always the case).

4.6.1 Slug Testing Data Analysis Methods

- Bouwer-Rice, 1976, Curve Fitting Method (unconfined, steady state)
- Hvorslev Straight Line Method (point piezometer)
- Cooper, et al., 1967, Curve Fitting (confined, unsteady state, fully penetrating)
- Ferris-Knowles Estimation

4.6.2 Step Drawdown Test Methods

- Birsoy-Summers Method (confined)
- A modified Cooper-Jacob Method (1946) (confined)

4.6.3 Constant Rate Pumping Tests and Recovery Tests Methods

- Cooper-Jacob Straight Line Approximation (confined, unsteady state)
- Theis (1935) Curve Matching Method (unsteady state, confined, pumping or recovery)
- Neuman (1975) Curve Fitting Method (unconfined, unsteady state, delayed response)
- Hantush-Jacob (1955) Method (leaky, unsteady state, no storage in aquitards)
- Hantush (1960) Method (leaky, unsteady state, with storage in aquitards
- Thiem (1906) Method (steady state, confined)
- Neuman and Witherspoon, 1972 (Analyses of Leaky Aquifers).
- Moench, A.F., 1996. Flow to a Well in a Water-Table Aquifer: An Improved Laplace Transform Solution. Ground Water, vol. 34. No. 4, pp. 593-596

4.6.4 Computer-Aided Aquifer Analysis

Many commercially available, PC-based aquifer analysis programs exist to ease data reduction and analysis. It is important for the user to understand the fundamental principles involved in each method of aquifer analysis. The following are three commonly used programs:

- Graphical Well Analysis Package (GWAP) (Dansby and Price, 1987). Uses curve-matching methods for pumping tests and slug tests. Report-ready output to HP Laserjets.

- Aquifer Test Solver (AQTESOLV) (HydroSolve, 2003). Similar to GWAP, uses curve-matching for most pumping test applications and slug tests, including Bouwer-Rice unconfined method.

- Step-Test Program (public domain) for analysis of Step-Drawdown tests. Program written by Dr. David Huntley of San Diego State University. It provides relatively quick entry of time-drawdown data, as well as completion of the required calculations. The method involves a Taylor series, and manual data analysis is extremely tedious.

- AquiferTest, (Waterloo Hydrogeologic, Inc., 2002) uses curve matching for most pumping test and slug test applications. Also includes solution methods for calculating well losses and includes a pumping test planner for predicting time-drawdown and distance drawdown.

5.0 REFERENCES

Bouwer, H. and Rice, R.C., 1976. A slug test method for determining the hydraulic conductivity of unconfined aquifers with completely or partially penetrating wells, Water Resources Research, vol. 12, no. 3, pp. 423-428.

Cooper, H.H., and Jacob, C.E., 1946. A generalized graphical method for evaluating formation constants and summarizing well field history, Am. Geophys. Union Trans. vol 27, pp. 526-534.

Cooper, H.H., Bredehoeft, J.D., and Papadopulos, S.S., 1967. Response of a finite-diameter well to an instantaneous charge of water, Water Resources Research, vol. 3, no. 1, pp. 263-269.

Dansby, D.A., and Price, C.A., 1987. Graphical Well Analysis Package "GWAP" v.2.0, Groundwater Graphics, 5209 Windmill Street, Oceanside, CA 92056. ph. (619) 940-9473.

Driscoll, F.G., 1986. Groundwater and Wells. 2nd Ed., Johnson Division of Wells, St. Paul, Minnesota.

Freeze, R.A., and J.A. Cherry, 1979. Groundwater, Prentice-Hall, Inc., Englewood Cliffs, N.J.

HydroSolve, Inc., 2003. Aquifer Test Solver "AQTESOLV" v.3.5, Reston, Virginia.

Hantush, M.S. and C.E. Jacob, 1955. Non-steady radial flow in an infinite leaky aquifer, Am. Geophys. Union Trans., vol. 36, pp. 95-100.

Hantush, M.S., 1960. Modification of the theory of leaky aquifers, Jour. of Geophys. Res., vol. 65, no. 11, pp. 3713-3725.

Kruseman, G.P., and N.A. de Ridder, 1991. Analysis and Evaluation of Pumping Test Data, 2nd Ed., Nat'l Institute for Land Reclamation and Improvement/ILRI, Wageningen, The Netherlands, 377p. Available through the NWWA Bookstore.

Lohman, S.W., 1979. Ground-Water Hydraulics, USGS Prof. Paper 708. Available through the USGS "Books and Open-File Reports Section, Federal Center, Box 25425 Denver, Colorado 80225.

Moench, A.F., 1996. Flow to a Well in a Water-Table Aquifer: An Improved Laplace Transform Solution. Ground Water, vol. 34. No. 4, pp. 593-596

Neuman, S.P., 1975. Analysis of pumping test data from anistropic unconfined aquifers considering delayed yield, Water Resources Research, Vol 11, No. 2, pp. 329-342.

Neuman, S.P., and P.A. Witherspoon, 1972. Field Determination of Hydraulic Properties of Leaky Multiple-Aquifer Systems. Water Resources Res. Vol. 8, No. 5, October 1972, pp. 1284 - 1298.

Thiem, G., 1906. Hydrologische Methoden. Gebhardt, Leipzig, 56p.

Theis, C.V., 1935. The relation between the lowering of the piezometric surface and the rate and duration of discharge of a well using groundwater storage, Am. Geophys. Union Trans., Vol. 16, pp. 519-524.

Waterloo Hydrogeologic, Inc., 2002. AquiferTest Pro v.3.5, Waterloo, Ontario, Canada.

BASIC REMEDIATION COMPANY
STANDARD OPERATING PROCEDURES
BMI COMMON AREAS
CLARK COUNTY, NEVADA

SOP-05

WATER SAMPLING AND FIELD MEASUREMENTS

STANDARD OPERATING PROCEDURES

SOP-05
WATER SAMPLING AND FIELD MEASUREMENTS

TABLE OF CONTENTS

Section **Page**

1.0 INTRODUCTION 1

2.0 DEFINITIONS 1

3.0 RESPONSIBILITIES 4

4.0 WATER SAMPLING GUIDELINES 4
- 4.1 Equipment 4
  - 4.1.1 Bailers 6
  - 4.1.2 Peristaltic Pumps 7
  - 4.1.3 Submersible Pumps 8
  - 4.1.4 Other Pumps 9
- 4.2 Well Purging Methods 10
  - 4.2.1 Calculation of Casing Volume 10
  - 4.2.2 Calculation of Annulus Volume 11
  - 4.2.3 Purging Requirements 12
  - 4.2.4 Purge Water Handling and Disposal 13
- 4.3 Field Measurements 13
  - 4.3.1 Water Level 14
  - 4.3.2 Multi-Parameter Probes 15
- 4.4 Sample Collection Methods 15
  - 4.4.1 Sample Containers 15
  - 4.4.2 Field Filtration for Dissolved Metals and Radionuclides 16
  - 4.4.3 Methyl Mercury “Clean Hands/Dirty Hands” Collection Method 17
  - 4.4.4 Sampling from Non-Monitoring Wells and Springs/Seeps 18
- 4.5 Decontamination 19
- 4.6 Records and Documentation 20
  - 4.6.1 Sample Designation 20
  - 4.6.2 Sample Label 20
  - 4.6.3 Field Notebooks and Sampling Forms 20
  - 4.6.4 Chain-of-Custody 20
- 4.7 Sample Handling and Shipping 21
  - 4.7.1 Sample Handling 21
  - 4.7.2 Shipping Instructions 21

5.0 REFERENCES 22

LIST OF ATTACHMENTS

Attachment 1 Monitoring Well Development/Sampling Form
Attachment 2 Groundwater Field Sampling Form
Attachment 3 Chain-of-Custody Record
Attachment 4 Volume of Schedule 40 PVC Pipe

DISCLAIMER

THE FOLLOWING STANDARD OPERATING PROCEDURE PROVIDES GENERAL GUIDANCE FOR BRC CONTRACTORS FOR TECHNICAL ISSUES ADDRESSED DURING ENVIRONMENTAL SITE INVESTIGATION AND REMEDIATION ACTIVITIES. IT IS NOTED, HOWEVER, THAT EACH SITE IS UNIQUE AND THESE GUIDELINES ARE NOT A SUBSTITUTE FOR COMMON SENSE AND GOOD MANAGEMENT PRACTICES BASED ON PROFESSIONAL TRAINING AND EXPERIENCE. IN ADDITION, INDIVIDUAL CONTRACT TERMS MAY AFFECT THE IMPLEMENTATION OF THIS STANDARD OPERATING PROCEDURE. BRC CONTRACTORS RESERVE THE UNRESTRICTED RIGHT TO CHANGE, MODIFY OR NOT APPLY THESE GUIDELINES IN THEIR SOLE, COMPLETE, AND UNRESTRICTED DISCRETION TO MEET CERTAIN CIRCUMSTANCES, CONTRACTUAL REQUIREMENTS, SITE CONDITIONS, OR JOB REQUIREMENTS.

1.0 INTRODUCTION

This guideline is a general reference for the proper equipment and techniques for groundwater sampling. The purpose of these procedures is to enable the user to collect representative and defensible groundwater samples and to facilitate planning of the field sampling effort. These techniques should be followed whenever applicable, although site-specific conditions or project-specific plans may require adjustments in methodology.

To be valid, a groundwater sample must be representative of the particular zone of the water being sampled. The physical, chemical, and bacteriological integrity of the sample must be maintained from time of collection to time of analysis in order to minimize changes in water quality parameters. Acceptable equipment for withdrawing samples from completed wells includes bailers and various types of pumps. The following are primary considerations in obtaining a representative sample of the groundwater:

- Avoid collecting stagnant (standing) water in the well.
- Avoid physically or chemically altering the water by improper sampling techniques, sample handling, or transport.
- Document that proper sampling procedures have been followed.

This guideline describes suggested well evacuation (or purging) methods, sample collection and handling, field measurement, decontamination, and documentation procedures. Examples of sampling and chain-of-custody (COC) forms are attached.

2.0 DEFINITIONS

Annular Space	The space between casing or well screen and the wall of the drilled hole, or between drill pipe and casing, or between two separate strings of casing. Also called annulus.
Aquifer	A geologic formation, group of formations, or part of a formation that is capable of yielding a significant amount of water to a well or spring.
Bailer	A long narrow tubular device with an open top and a check valve at the bottom that is used to remove water from a well during purging or sampling. Bailers are available in many widths and lengths, and may be made of Teflon, polyvinyl chloride (PVC), polyethylene (PE), or stainless steel. Disposable bailers are widely used, and are available in Teflon and PE.

Bladder Pump	A pump consisting of flexible bladder (usually made of Teflon) contained within a rigid cylindrical body (commonly made of PVC or stainless steel). The lower end of the bladder is connected through a check valve to the intake port, while the upper end is connected to a sampling line that leads to the ground surface. A second line, the gas line, leads from the ground surface to the annular space between the bladder and the outer body of the pump. After filling, under hydrostatic pressure, application of gas pressure causes the bladder to collapse, closing the check valve and forcing the sample to ground surface through the sample line. Gas pressure is often provided by a compressed air tank, and commercial models generally include a control box that automatically switches the gas pressure off and on at appropriate intervals.
Centrifugal Pump	A pump that moves a liquid by accelerating it radially outward in an impeller to a surrounding spiral-shaped casing.
Chain of Custody	Method for documenting the history and possession of a sample from the time of its collection through its analysis and data reporting to its final disposition.
Check Valve	Ball and spring valves on core barrels, bailers, and sampling devices that are used to allow water to flow in one direction only.
Conductivity (electrical)	A measure of the quantity of electricity transferred across a unit area, per unit potential gradient, per unit time. It is the reciprocal of resistivity.
Datum	An arbitrary surface (or plane) used in the measurement of heads (i.e., National Geodetic Vertical Datum, commonly referred to as mean sea level).
Direct-Push Technology	A method of soil boring installation involving pushing a sampling device into the ground and retrieving it for soil description and collection (Geoprobe® is a common trademark name). Groundwater samples can be collected from the borehole by inserting a screen point into the hole and removing groundwater via peristaltic pump or small-diameter bailer. Similar to Hydropunch® (see below).
Decontamination	A variety of processes used to clean equipment that contacted formation material or groundwater that is known to be or suspected of being contaminated.
Downgradient	In the direction of decreasing potentiometric head.

Drawdown	The lowering of the water level or potentiometric surface in a well and aquifer due to the discharge of water from the well.
Electric Submersible Pump	A pump that consists of a rotor contained within a chamber and driven by an electric motor. The entire device is lowered into the well with the electrical cable and discharge tubing attached. A portable power source and control box remain at the surface. Electrical submersible pumps used for groundwater purging are constructed of inert materials such as stainless steel, and are well sealed to prevent sample contamination by lubricants.
Filter Pack	Sand or gravel that is generally uniform, clean, and well rounded that is placed in the annulus between the borehole wall and the well screen to prevent formation material from entering through the well screen and to stabilize the adjacent formation.
Headspace	The empty volume in a sample container between the water level and the cap.
HydroPunch®	An *in situ* groundwater sampling system in which a hollow steel rod is driven into the saturated zone that allows for the collection of a groundwater sample.
In Situ	In the natural or original position; in place.
Monitoring Well	A well that is constructed by one of a variety of techniques for the purpose of extracting groundwater for physical, chemical, or biological testing, or for measuring water levels or potentiometric surface.
Packer	A transient or dedicated device placed in a well or borehole that isolates or seals a portion of the well, well annulus, or borehole at a specific level.
Peristaltic Pump	A low-volume suction pump. The compression of a flexible tube by a rotor results in the development of suction.
pH	A measure of the acidity or alkalinity of a solution, numerically equal to 7 for neutral solutions, increasing with increasing alkalinity and decreasing with increasing acidity. (Original designation for potential of hydrogen.)
Piezometer	An instrument used to measure water level or potentiometric head at a point in the subsurface; a non-pumping well, generally of small diameter, that is used to measure the elevation of the water table or potentiometric surface.

Preservative	An additive (usually an acid or a base) used to protect a sample against decay or spoilage, or to extend the holding time for a sample.
Static Water Level	The elevation of the top of a column of water in a monitoring well or piezometer that is not influenced by pumping or conditions related to well installation, hydrologic testing, or nearby pumping.
Turbidity	Cloudiness in water due to suspended and colloidal organic and inorganic material.
Upgradient	In the direction of increasing potentiometric head.

3.0 RESPONSIBILITIES

The **Project Manager** selects site-specific water sampling methods, locations for monitoring well installations, monitoring wells to be sampled and analytes to be analyzed (with input from the Field Team Leader and Project Geologist), and is responsible for project quality control and field audits.

The **Field Team Leader/Geologist** (a qualified Nevada Certified Environmental Manager [C.E.M.]) implements the water sampling program; supervises the Project Geologist/Hydrogeologist and Sampling Technician; ensures that proper COC procedures are observed and that samples are sampled, transported, packaged, and shipped in a correct and timely manner.

The **Project Geologist/Hydrogeologist** (a qualified Nevada C.E.M.) ensures proper collection, documentation, and storage of groundwater samples prior to shipment to the laboratory, and assists in packaging and shipment of samples.

The **Field Sampling Technician** assists the Project Geologist/Hydrogeologist in the completion of tasks and is responsible for the proper use, decontamination, and maintenance of groundwater sampling equipment.

4.0 WATER SAMPLING GUIDELINES

4.1 Equipment

There are many methods available for well purging (evacuation) and sampling. A variety of issues must be considered when choosing purging and sample collection equipment. These issues include the following:

- Depth and diameter of the well
- Recharge capacity of the well
- Analytical parameters that will be tested
- Governing regulatory requirements

Few sampling devices are suitable for the complete range of groundwater analytical parameters. For example, a bailer is acceptable for collecting major ion and trace metal samples (if turbidity is not a factor), but analytical results may be incorrect if used for the collection of samples that are analyzed for volatile organics, dissolved gases, or even pH. Generally, the best pumps are positive displacement pumps, such as bladder and helical rotor pumps, which minimize the aeration of the groundwater as it is sampled, and therefore yield the most representative groundwater samples. Although it is possible to use different equipment to purge the well and to sample the well, this is not recommended because of the increased decontamination requirements and possibilities for cross contamination. It is recommended that a flow rate as close to the actual groundwater flow rate should be employed to avoid further development, well damage, or the disturbance of accumulated corrosion or reaction products in the well (Puls and Barcelona, 1989).

Positive displacement pumps, such as bladder pumps, are generally recommended for both well evacuation and sample collection. Disposable bailers are also commonly used for well development and evacuation, as well as sample collection in certain cases. Other types of sample collection such as gas lift pumps should be avoided, especially when analyzing for sensitive parameters, because of the geochemical changes that can occur due to the aeration of the water within the well. Also, the use of certain sample devices (e.g., bailers or high-rate centrifugal pumps) may entrain suspended materials, such as fine clays and colloids, which are not representative of mobile chemical constituents in the formation of interest (Puls and Barcelona, 1989).

Specific instructions for the use of several of the sampling devices are discussed in the next sections. All purging and sampling equipment should be decontaminated before beginning work and between wells, in accordance with Section 4.5.

4.1.1 Bailers

Bailers represent the simplest and least expensive method of collecting the sample from a well. However, they may not be suitable for all analyses. Bailers are available as permanent (re-usable or dedicated) and disposable. Permanent bailers are usually constructed of Teflon or stainless steel. Disposable bailers are usually constructed of PE or Teflon.

The advantages to using permanent bailers are:

- Inexpensive
- Easy to use and maintain

The disadvantages to using permanent bailers are:

- Disturb sediment while sampling
- Require decontamination and risk of cross-contamination
- Require disposal of contaminated purge water
- Possibility of splashing (health and safety issue)

The advantages of using disposable bailers are:

- No need for decontamination between.
- Inexpensive
- Easy to use

The disadvantages to using disposable bailers are:

- Disturb sediment while sampling
- Require disposal of contaminated purge water
- Possibility of splashing (health and safety issue)

Disposable bailers are preferred. Since there is no cross- contamination between samples, there is no need for time-consuming decontamination.

Bailers can be lowered and raised using stainless steel wire or polypropylene cord. Polypropylene cord is recommended since it is inexpensive, light, and strong, however it should

be discarded after one use to prevent cross-contamination. At no time should the bailer or the line touch the ground during the sampling process. This can be done by coiling the line around one's hands while pulling the bailer out of the well. For deep wells, the line may be coiled into a bucket or on a clean plastic sheet.

During bailing, the purge water is poured out of the top of the bailer into a 5-gallon bucket, 55-gallon drum, or equivalent. Most groundwater sampling protocols require that the amount of water purged be recorded; thus, a 5-gallon bucket with 1-gallon markings is recommended. During sampling, the water can be poured out of the top of the bailer. This should not be done for volatile analyses. Water can also be removed from the bottom of the bailer using a small tube or sampling device that comes with most disposable bailers. This device essentially pushes the ball out of the valve, allowing water to slowly flow out of the bottom of the bailer. This is the recommended method for volatile organic compound (VOC) sampling.

4.1.2 Peristaltic Pumps

Peristaltic and centrifugal pumps are widely used for purging wells with water levels close to the surface (less than 30 feet). They are light, reasonably portable, and easily adaptable to ground level monitoring of field parameters by attaching a flow-through cell. These pumps require minimal downhole equipment. The tubing can easily be cleaned in the field; however, more often dedicated tubing is left in each well, or tubing is replaced after each well. The following procedures should be considered when using these pumps:

- Unless dedicated tubing is used, the interior and exterior of all intake tubing used with the peristaltic/centrifugal pump should be thoroughly washed with a detergent wash, flushed with tap water, and then double rinsed with distilled water prior to use.

- Peristaltic pumps typically run on batteries. However, if a gas-powered generator is used, it should be downwind of the well.

- The intake of the tubing should be lowered to the midpoint of the well screen. Alternatives to this procedure may be necessary if the drawdown from the purging operations causes the water level to fall and begin to pump air. Because of accumulated sediment at the well bottom, the intake should be at least 1 foot above the bottom of the well.

- If parameters are to be monitored continuously, it is recommended that an in-line "flow-through" cell with a multi-parameter water quality meter be used. Connect the discharge tubing from the pump to the "in" port of the flow-through cell and begin evacuating the well (make sure to have the "out" port connected to a bucket or some sort of water containment). Continuously monitor the parameters (typically pH, oxidation reduction potential (ORP or

redox), dissolved oxygen (DO), turbidity, temperature, and specific conductivity) and measure the volume of groundwater being pumped.

- After purging is complete (stabilization of parameters), disconnect the discharge tubing from the flow through cell prior to sampling. Do not collect water that has flowed through the flow-through cell.

The advantages of using peristaltic pumps are:

- Typically less purge water to collect and dispose (if low-flow sampling)
- Relatively easy to use
- Very little disturbance of sediment; easy to achieve low turbidity samples
- Low health and safety risk (low splash possibility)

The disadvantages to using peristaltic pumps are:

- Possibly expensive, depending on tubing and pump used.
- Sampling time can be 1 hour or more per well.
- Limited depth applicability; can pump only from depths less than 32 feet.
- Vacuum or negative pressure can potentially alter the geochemistry (VOCs, pH, alkalinity).

4.1.3 Submersible Pumps

Submersible pumps take in water and push the sample up a tube to the surface. The power sources for these pumps may be compressed gas or electricity. The operation principles vary, and the displacement of the sample can be by an inflatable bladder, sliding piston, gas bubble, or impeller. Bladder or helical rotor pumps are recommended for sampling for sensitive parameters. Bladder pumps are available for .05-inch diameter wells and larger, and these pumps can lift water up to several hundred feet. For large sampling projects, dedicated tubing is recommended, as tubing for bladder pumps is typically very expensive ($10 per foot), thus making disposable tubing not efficient. The entire pump assembly (and tubing, if applicable) should be decontaminated before purging and between wells, as described in Section 4.5.

The advantages of using submersible pumps are:

- Less purge water to collect and dispose (if low-flow sampling).

- Very little disturbance of sediment; easy to achieve low turbidity samples.
- Adjustable to very low flow rates.
- Can be used to sample wells 300 or more feet deep.
- Dedicated systems can lower costs over time.
- Low health and safety risk (low splash possibility).
- Some types (e.g., bladder pumps) can be easily disassembled for decontamination.

The disadvantages of submersible pumps are:

- Need power source or gas source, which can be hard to transport to remote well locations.
- High start-up costs; Many models of these pumps are expensive, as is the tubing.
- Sediment in water may cause clogging of the valves or eroding the impellers with some of these pumps.
- Decontamination of internal components of some types is difficult and time consuming.

4.1.4 Other Pumps

Gas-Lift Pumps

A pressure displacement system consists of a chamber equipped with a gas inlet line, a water discharge line, and two check valves. When the chamber is lowered into the casing, water floods it from the bottom through the check valve. Once full, a gas (e.g., nitrogen or air) is forced into the top of the chamber in sufficient amounts to displace the water in the discharge tube. The check valve in the bottom prevents water from being forced back into the casing, and the upper check valve prevents water from flowing back into the chamber when the gas pressure is released. This cycle can be repeated as necessary until purging is complete. The potential for increased gas diffusion into the water (and thus loss of volatiles) makes this system unsuitable for sampling volatile organic or most pH critical parameters. This method is not recommended for groundwater sampling, but may be useful for development or evacuation of a well.

Direct-Push Technology Groundwater Sampling

Direct Push Technology (DPT) provides *in situ* groundwater samples by using a specially designed sample tool to provide a hydraulic connection with the water table. When used with a

mobile laboratory, DPT groundwater sampling can be useful for such applications as relatively rapid delineation of groundwater plumes. It is also ideal for screening for contaminants. Both groundwater and floating layer hydrocarbons may be sampled using this method.

The DPT method utilizes a sampler containing a stainless steel screen point, which is attached to the DPT rods and is inserted into the DPT borehole. When the screen is at the desired depth, the sampler is pulled back, exposing the screen to the formation. Groundwater can then be sampled used a peristaltic pump or a small diameter bailer.

This method may be used to sample groundwater up to approximately 60 feet of soft sediments. In coarse sand, gravel, consolidated rock, or at depths greater than 60 feet, a pilot hole must be drilled prior to using this method.

The advantages of using DPT groundwater sampling techniques are:

- Low cost (relative to installing monitoring wells)
- Able to collect a relatively undisturbed *in situ* groundwater sample
- The relative speed with which a sample can be collected when compared to drilling, installing, developing, purging, and sampling a monitoring well

The disadvantages of using DPT groundwater sampling techniques are:

- Accurate water levels can not be obtained
- Sampling cannot be repeated if problems occur with the samples after they are collected
- Does not allow for long-term groundwater monitoring

4.2 Well Purging Methods

Well development procedures are covered in SOP-03, “Groundwater Monitoring Well Development.”

4.2.1 Calculation of Casing Volume

To ensure that an adequate volume of water has been removed from the well prior to sampling, it is first necessary to determine the volume of standing water in the well and the volume of water in the filter pack below the well seal. The volume can be easily calculated by the following method (calculations should be entered in the field logbook):

1. Obtain all available information on well construction (e.g., location, casing, screen, depth).

2. Determine well or casing diameter.

3. Measure and record static water level using an electronic water level meter (depth below top of casing reference point).

4. Use a pre-determined total depth of the well to calculate the water column. Measuring total depth prior to sampling will disturb sediment that has accumulated at the bottom of the well, which will affect sample results.

5. Calculate the volume of water in the casing using the following formula:

$$V = 7.481\ (\pi r^2 h)$$

where:

V	=	Casing volume (gal)
r	=	Well radius (ft)
h	=	Linear feet of water in well = total well depth (ft) - static water depth (ft)

Alternatively, the casing volume can be calculated by multiplying the linear feet of water in the well by the volume per linear feet taken from Attachment 1 or other similar tables. Always be sure that the units in your calculation are consistent. In the equation above, 7.481 is the conversion factor from cubic feet to gallons.

4.2.2 Calculation of Annulus Volume

Some groundwater sampling protocols require the purging of casing and annulus volumes prior to sampling. In these cases the volume of water contained in the annular space between the casing and the borehole wall is calculated by the following formula:

$$Va = (Cb - Cc) \times (h) \times (0.30)$$

where:

Va	=	Volume of water in annulus (gal)
Cb	=	Borehole capacity (gal/ft)
Cc	=	Casing capacity (gal/ft)
h	=	Amount of standing water in the well or total linear height of the sand pack, whichever is less (ft)
0.30	=	Average porosity of typical sand pack

The values for Cb and Cc can be calculated by the formula πr^2. The annulus volume is added to the casing volume prior to multiplying by the number of volumes to be purged.

4.2.3 Purging Requirements

The composition of the water within the well casing and in close proximity to the well is probably not representative of the overall groundwater quality in the target aquifer. This is because important environmental conditions such as the ORP may differ drastically near the well from the conditions in the surrounding water-bearing materials. For this reason it is necessary to either purge the well until it is thoroughly flushed of standing water and contains fresh water from the aquifer, or sample from discrete intervals in the screened interval at low flow rates in order to collect undisturbed aquifer water (Puls and Barcelona, 1996).

Full Well Purging

When full purging is required, the recommended amount of purging before sampling depends on many factors, including the characteristics of the well, the hydrogeological nature of the aquifer, the type of sampling equipment being used, the parameters that are to be analyzed, and the regulatory requirements of the project. The number of casing volumes that should be removed prior to sample collection has been a matter of debate in the groundwater community for some time. However, it is recommended that where possible, between three and five casing volumes should be purged prior to sampling.

Low-Flow Sampling

Many groundwater scientists and regulatory departments have accepted and prioritized the use of low-flow purging and sampling of groundwater. Low-flow purging is defined as pumping rates between 0.1 and 0.5 liters per minute (L/min). Also, rather than relying on the removal of a specific volume of water prior to sample collection, physical parameters, such as pH, DO, ORP, turbidity, specific conductivity, and temperature, are collected at certain intervals (usually every 2 to 5 minutes). In order to minimize contact with the atmosphere, these parameters are typically measured using a multi-parameter meter inside a closed “flow-through” cell attached to the discharge side of a pump system. Once the parameters have stabilized, the groundwater is considered representative of the aquifer and is ready for sample collection. Determining *when* the parameters have stabilized, however, may differ between regulatory agencies. Per the U.S. Environmental Protection Agency (EPA) document *Low-Flow (Minimal Drawdown) Ground-Water Sampling Procedures* (Puls and Barcelona, 1996), the parameters are considered stabilized when three consecutive measurements are within the following constraints:

- Temperature ± 10 %

- Conductivity ± 3 %
- pH ± 0.1
- DO ±10 %
- ORP ±10 mV
- Turbidity ±10 % or <10 nephelometric turbidity units (NTUs)

During purging, water levels should be monitored to ensure that drawdown does not exceed 0.1 m (0.3 ft). If the water level drop exceeds this, the flow rate should be decreased until the water level stabilizes. If water levels in low yield wells do not stabilize at flow rates near 0.1 L/min, the well should be purged to dryness once and then sampled (EPA, 1986). Samples should be collected when the well has recovered to 80 percent of its original capacity or at 24 hours from being purged to dryness, whichever comes first. At no time should the well be pumped to dryness if the recharge rate causes the formation water to vigorously cascade down the sides of the screen and cause an accelerated loss of volatiles. In this case, samples should be collected at a rate slow enough to maintain the water level at or above the top of the screen to prevent cascading.

4.2.4 Purge Water Handling and Disposal

Because of the potential for spreading environmental contamination, planning for purge water disposal is a necessary part of well monitoring. Alternatives range from releasing it on the ground (not back down the well) to full containment, treatment, and disposal. If the well is believed to be contaminated, the best practice is to contain the purge water and store it in drums labeled “purge water” or in aboveground portable storage tanks (i.e., Baker Tanks) until the water samples have been analyzed. Include the date that the waste was generated on the container. Once the contaminants are identified, appropriate treatment or disposal requirements can be determined.

4.3 Field Measurements

A variety of field measurements are commonly made during the sampling of groundwater including water level, pH, conductivity, turbidity, temperature, DO, and ORP. The accuracy, precision, and usefulness of these measurements are dependent on the proper use and care of the field instruments. Valid and useful data can only be collected if consistent practices (in accordance with recommended manufacturer’s instructions) are followed. The instruments

should be handled carefully at the well site and during transportation to the field and between sampling sites.

4.3.1 Water Level

Water levels can be measured by several techniques, but the most common method is using an electronic water level meter. The proper sequence is as follows:

1. Check operation of measurement equipment aboveground. Prior to opening the well, don personal protective equipment as required.

2. Record the following information on a sampling form or in the field notebook if a form is not available:
   - Well number
   - Top of casing elevation
   - Surface elevation, if available.

3. After opening the well, observe any pressure in the well. Allow 10-30 seconds for the water levels to equilibrate and stabilize. Repeat measurement after 30 seconds to assure the water level has stabilized.

4. Measure and record static water level and total depth (only if necessary) to the nearest 0.01 foot (0.3 cm) from the surveyed reference mark on the top edge of the inner well casing. If no reference mark is present, record in the log book where the measurement was taken (e.g., from the north side of the inner casing).

5. Record the time and day of the measurement.

Electric Water Level Indicators

These devices consist of a spool of small-diameter cable or tape and a weighted probe attached to the end. When the probe comes in contact with the water, an electrical circuit is closed and a meter, light, and/or buzzer attached to the spool will signal the contact. For accurate readings, the probe should be lowered slowly into the well.

Oil/Water Interface Probes

If oil or free product is encountered in the well, an oil/water interface probe can be used to measure the thickness of the product on top of the water. Most models exhibit two distinct electronic sounds for oil (usually a solid beep) and water (an intermittent beep). The most accurate method for measuring the oil/water interface is to first measure the top of the free product, then go through the product until the probe registers water, and then slowly raise the

probe until a solid beep is encountered. This prevents a false thickness of product being measured, since product may stick to the probe causing the probe to read product when it really is in water.

4.3.2 Multi-Parameter Probes

Typically, groundwater parameters such as pH, temperature, and DO are measured in a flow-through cell using a probe that measures several parameters at once. Certain sampling techniques may preclude the use of these probes, and individual probes may need to be used instead.

Instruments should be calibrated at the beginning of every day, and if readings become suspect. Most instruments claim to hold their calibration longer than a day; if so, their calibration can be checked every morning. If the values do not match the expected numbers, the instrument should be calibrated again. The manufacturer's directions for calibration, maintenance, and use should be read and closely followed. Any problems with the functioning of the meter should be noted in the field log and reported to the office equipment manager.

4.4 Sample Collection Methods

4.4.1 Sample Containers

A complete set of sample containers should be prepared by the laboratory prior to going into the field. The laboratory should provide the proper containers with the required preservatives. The laboratory's quality assurance manual should provide a complete description of the procedures used to clean and prepare the containers. The containers should be labeled in the field with the date, well designation, project name, collectors' name, time of collection, and parameters to be analyzed. The sample containers should be kept in a cooler (at 4 degrees centigrade) until they are needed (i.e., not left in the sun during purging). One cooler should be used to store the unfilled bottles and another to store the samples.

The sample bottles should be filled in order of the volatility of the analytes so that the containers for volatile organics will be filled first, and samples that are not pH-sensitive or subject to loss through volatilization will be collected last. A preferred collection order (EPA, 1986) is as follows:

- VOCs
- Total petroleum hydrocarbons

- Total organic halogens
- Total organic carbon
- Extractable organics (e.g., pesticides, herbicides)
- Total metals
- Dissolved metals
- Phenols
- Cyanide
- Sulfate and chloride
- Nitrate and ammonia
- Total Radionuclides

Field measurements, such as temperature, pH, and specific conductance, should be measured and recorded in the field before and after sample collection to check on the stability of the water samples over time.

4.4.2 Field Filtration for Dissolved Metals and Radionuclides

Filtering groundwater samples has been a subject of considerable debate in recent years. In many cases, samples passing a 0.45-micron filter were used to provide an indication of dissolved metals concentrations in groundwater. Puls and Barcelona (1989) report that the use of a 0.45-micron filter was not useful, appropriate, or reproducible in providing information on metals mobility in groundwater systems, nor was it appropriate for determination of truly "dissolved" constituents in groundwater. A dual sampling approach is recommended to collect both filtered and unfiltered samples. For routine groundwater sampling field filtering should not be performed on total metal and total radionuclide samples per this Standard Operating Procedure (SOP).

Any filtration for estimates of dissolved species loads should be performed in the field with no air contact and immediate preservation and storage. In-line pressure filtration is best with as small a filter pore size as practically possible (e.g., 0.45, 0.10 micron). Disposable, in-line filters are recommended for convenience and avoiding cross-contamination. The filters should be

pre-rinsed with distilled water; work by Jay (1985) showed that virtually all filters require pre-washing to avoid sample contamination.

In the absence of filters, low-flow sampling techniques can reduce turbidity to values less than 10 NTUs.

4.4.3 Methyl Mercury "Clean Hands/Dirty Hands" Collection Method

Sample bottles may be either Teflon, which has been cleaned, tested, filled with dilute HCl, and double bagged in a laboratory clean-room, or borosilicate glass obtained from a supplier which certifies cleanliness for metals sampling (e.g., I-Chem, Series 200 or equivalent). In general, a sample kit should be obtain from the laboratory consisting of proper containers, bags, gloves, and instructions. The use of locally obtained or untested containers is strongly discouraged as they may be the source of possible contamination. At the site the bottle is filled with water sample using an abbreviated version of the "clean –hands – dirty –hands" technique described in EPA Method 1669. Bottles are sealed tightly and re-bagged using the opposite series of steps as were used to open them. Bottles are shipped to the analytical laboratory via overnight courier for preservation and analysis.

<u>Sample Collection</u>

Samples should be collected only into rigorously cleaned and tested (for mercury) Teflon bottles or borosilicate glass bottles with Teflon-lined caps.

Samples are collected using rigorous ultra-clean protocols which are summarized as follows.

1. Ideally, at least two persons wearing fresh clean-room gloves at all times are required on a sampling crew.

2. One person ("dirty hands") pulls a bagged bottle from the cooler and opens the outer, dirty bag, avoiding touching inside that bag.

3. The other person ("clean hands") reaches in, opens the inner bag (if present), and pulls out the sample bottle. "Clean hands" should not touch anything but the sample bottle, its cap, and the water being sampled.

4. This bottle is opened and the acidified water (if present) is discarded. Under no circumstance should the bottle cap be placed on any surface while it is removed from the bottle.

Note: the sampler should be wary of disturbing the flow upstream of the sampling point. Often the insertion of the bottle into a flowing stream, or simply standing in the flow downstream of

the sampling point, creates eddies (upstream flow) which can re-suspend solids near the sampling point. Entry of such re-suspended solids into samples for analysis of mercury will produce a non-representative sample and very likely increase the mercury concentration.

For Aqueous Sampling

5a. The bottle (including its cap) is rinsed three times with the sample water, and then filled almost completely. Leaving a small headspace (e.g. 1% of bottle volume) is acceptable and provides space for subsequent acid preservation at the laboratory.

Note: If the sampler cannot directly reach the water to be sampled, a pole-type sampler may be used to fill the bottle. The pole and bottle clamp should be made of plastic and/or stainless steel and the mouth of the bottle should be held facing upstream of the pole. Again, the use of a transfer vessel should be avoided.

For Sediment Sampling

5b. The bottle is then filled almost completely with sediment using a utensil known to be free from trace metal contamination. The sampler should ensure that the sampling site is representative of the immediate area.

6. The cap is replaced and the bottle re-bagged in the opposite order from which it was removed.

7. Clean-room gloves are changed between samples and whenever anything not known to be trace metal cleaned is touched.

Samples should be sent to the analytical laboratory unpreserved. The sample should be preserved as required by the method soon after arrival at the laboratory (within 48 hours). Unpreserved samples have been found stable for at least 1 week, when stored in Teflon or borosilicate glass bottles.

4.4.4 Sampling from Non-Monitoring Wells and Springs/Seeps

Municipal/Residential Wells

Residential water supply wells should be sampled in a similar manner to monitoring wells, although allowances must be made for the type of pumping equipment already installed in the well. In most cases, this will involve sampling directly from the tap on each well and before the water has gone through any chlorination or treatment system. The sampling point should be a cold-water tap located as close to the pump as practical. Domestic supply samples should not be

taken from taps delivering chlorinated, aerated, softened, or filtered water. Faucet aerators should be removed if possible before sampling. Outdoor spigots are generally preferable, since they are usually provide untreated water and are less of an intrusion into the residence. Field parameters (temperature, DO, ORP, etc.) can be measured in a flow-through cell connected via hose to an outside spigot. The water sample can be collected after parameters stabilize. For sampling, the flow rate should be set to low flow sampling rates (or approximately 0.1 L/min). If field parameter measurement is not possible, the water tap should be turned on and run for at least 30 minutes unless the water tap is directly adjacent to the well head, and then the water should be allowed to run for no less than 10 minutes before the samples are collected to flush stagnant water from the system. All sample containers should be filled with water directly from the tap and the samples processed as described for monitoring well samples. Components of the plumbing system should be noted to assist in data interpretation.

Spring and Seep Sampling

Samples from springs or seeps should be collected directly into the sample bottles without using any special sampling equipment. The sample will be collected as close as possible to where the spring emanates from the soil or rock. The sampler should always stand downstream of the spring or seep to avoid disturbing sediment or clouding the water.

4.5 Decontamination

Decontamination procedures will vary from project to project based on the regulations and project-specific Field Sampling Plan (FSP). Generally, decontamination procedure for non-dedicated groundwater sampling equipment (bailers, pumps, water-level probes) consists of the following steps:

1. Scrub and wash with laboratory-grade detergent (such as Alconox™) and tap water.
2. Triple rinse with deionized water.

If equipment is highly contaminated, it may be rinsed with reagent-grade isopropanol alcohol or methanol and allowed to air dry prior to Step 2 above. A hot water pressure washer can also be used for decontaminating sampling equipment. However, dedicated or disposable equipment is preferable since it eliminates any possible cross-contamination pathway that incomplete decontamination may cause. As with other procedures documented in this SOP, decontamination procedures may be determined by the client or regulatory agency involved in the project.

4.6 Records and Documentation

4.6.1 Sample Designation

Sample names vary from project to project, and further instructions are typically described in the project Quality Assurance Project Plan (QAPP) or FSP. Typically, the site name or an abbreviation or acronym of the site name is included along with the well identification. Blind duplicate samples should be labeled with the number of a non-existent well, and should not include a sample time on the label. Equipment and trip blanks, collected when non-dedicated equipment is used, may also be labeled with a fictitious well name in a similar manner to the blind duplicate samples.

4.6.2 Sample Label

Sample containers should be labeled using waterproof ink before a sample is obtained. A sample label should be affixed to all sample containers. This label identifies the sample by documenting the sample type, sampler(s) initials, sample location, time, date, analyses requested, and preservation method. A unique sample designation as discussed above is assigned to each sample collected. This sample identification is also noted on the sample label.

4.6.3 Field Notebooks and Sampling Forms

A field notebook should be prepared prior to beginning sampling activities and should be maintained throughout the sample round. The notebook should contain pertinent information about the monitoring wells, such as depth of casing and water levels. During sampling, all the activities should be recorded on a groundwater sampling form (see Attachment 2) and/or in the field notebook. All forms used during sampling should be referenced in the field notebook. A brief description of weather conditions should also be noted as weather can sometimes affect samples. Any deviation from the sampling procedure described in the project work plan or SOP should be outlined in detail and justified in the field notebook. Specialized sampling forms can also be used to record the field measurements and other conditions observed.

4.6.4 Chain-of-Custody

The COC form (see Attachment 3) should be used to record the number of samples collected and the corresponding laboratory analyses. Information included on this form consists of time and date sampled, sample number, type of sample, sampler's name, preservatives used, and any

special instructions. The project QAPP will detail the procedure for completing the COC form. A separate COC form may be completed for each cooler, or copies of the completed COC may be placed in every cooler. A copy of the COC form should be retained by the sampler prior to shipment (forms with multiple carbon copies are recommended). The original COC form should accompany the sample to the laboratory and provide a paper trail to track the sample. When transferring the possession of samples, the individuals relinquishing and receiving the samples should sign, date, and note the time on the COC form. Frequent communication with the laboratory after shipment is recommended to assure proper handling and adherence to holding times.

4.7 Sample Handling and Shipping

4.7.1 Sample Handling

The samples will be kept cool during collection and shipment with wet ice in double Ziploc™ bags (to prevent leakage). Frozen "blue ice" is not recommended. The samples should be stored in a durable, appropriately sized ice chest. The samples should be placed upright on a 1- to 3-inch layer of packing materials, such as vermiculite or bubble packaging, and kept separated, with the intervening voids filled with the packing material more than halfway to the top of the bottles or containers. The ice should be placed above and about the tops of the containers. The COC record should be sealed in a Ziplock plastic bag and affixed to the inside of the top lid of the cooler. The remaining space should be filled with packing material. The cooler should be secured by completely wrapping with strapping tape around both ends and around the lid. If there is a drain on the cooler, it should be taped shut. COC seals should be affixed across the seal between the lid and body of the cooler.

4.7.2 Shipping Instructions

All samples should be shipped overnight delivery through a reliable commercial carrier, such as FedEx. If shipment requires more than a 24-hour period, sample holding times can be exceeded, or the samples may get warm, compromising the integrity of the sample analysis. The sampler should call the laboratory to alert them when the samples will arrive on the following day.

5.0 REFERENCES

Jay, P.C., 1985. Anion Contamination of Environmental Water Samples Introduced by Filter Media. Analytical Chemistry 57(3): 780-782.

Puls, R.W. and M.S. Barcelona, 1989. Ground Water Sampling for Metals Analyses, Superfund Ground Water Issue, EPA/540/4-89/001, March.

Puls, R.W. and M.S. Barcelona, 1996. Low-Flow (Minimal Drawdown) Ground-Water Sampling Procedures, U.S. Environmental Protection Agency document EPA/540/S-95/504, April.

U.S. Environmental Protection Agency (EPA), 1986. RCRA Ground-Water Monitoring Technical Enforcement Guidance Document, OSWER-9950.1, September.

ATTACHMENT 1

MONITORING WELL DEVELOPMENT/SAMPLING FORM

Basic Remediation COMPANY

MONITORING WELL DEVELOPMENT/LOW-FLOW PURGE/SAMPLING FORM

Page __of__

PROJECT: _____

Well ID: _____
Date: _____
Sample ID: _____
Time: _____
Analyses: _____
QA/QC - Dup ID: _____
Rinsate ID: _____
MS/MSD ID: _____

Screened Interval (ft): _____
Pump Intake Depth (ft): _____
Ave. Flow Rate (gpm/Lpm) _____
Purging/Sampling Device: _____
PID Reading at TOC: _____
Water Level Instrument: _____
Water Quality Meter(s): _____

Well Diameter (in) _____
Static Water Level (ft): _____
Total Well Depth (ft): _____
Water Column Length (ft): _____
Minimum Purge Volume: _____
Well Secure - yes/no _____
Samplers Name (Print) : _____

Time	Volume Purged (gal/L)	Flow Rate (gpm/Lpm)	Water Level (feet - TOC)	Specific Conductance ( )	pH	Temp	DO (mg/L)	ORP (mV)	Turbidity (NTU)	Salinity	TDS
			± 0.1 ft	5%	± 0.1	± 1°C	±10%	±10%	±10% or <10 NTU	%	
	Final Field Parameter Measurements										

Comments: _____

ATTACHMENT 2

GROUNDWATER FIELD SAMPLING FORM

Basic Remediation COMPANY

GROUNDWATER FIELD SAMPLING FORM

Project Name _____ Well No. _____

Project Number _____ Well Type ☐ Monitor ☐ Extraction ☐ Other _____

Recorded By _____ Sampled by _____ Date _____

WELL PURGING

PURGE VOLUME

Well casing diameter

☐ 2-inch (.17) ☐ 4-inch (.66) ☐ 6-in (1.50) _____

Well Total Depth (TD, ft. below TOC) _____

Depth to Water (WL, ft. below TOC)

Depth to free phase hydrocarbons (FP, ft. below TOC)

Number of casing volumes to be purged

☐ 3 ☐ 5 ☐ Other _____

PURGE METHOD

☐ Bailer - Type _____

☐ Pump - Type _____

☐ Other _____

PUMP INTAKE

☐ Near top Depth (ft) _____

☐ Near Bottom Depth (ft) _____

☐ Other _____

PURGE VOLUME CALCULATION

_____ X _____ X _____ = gals

Water Column Length | Multiplier | No. Vols | CALCULATED PURGE VOLUME

Total Purge Time _____ Purge Rate _____ gpm

Recharge Rate _____

gals

ACTUAL PURGE VOLUME

GROUNDWATER PARAMETER MEASUREMENTS Meter Type _____

Time/Gallons	pH	Cond. (mmhos/cm)	Temp	☐ deg C ☐ deg F	Turbidity (NTU)	Color/Odor Remarks
/						
/						
/						
/						
/						
/						
/						

Comments during well purge _____

Purge water storage/disposal ☐ Drummed onsite ☐ Other _____

WELL SAMPLING

SAMPLING METHOD Date/Time Sampled _____ / _____

Bailer - Type ☐ Dedicated/Disposable _____ Sample port ☐ Other ☐ _____

GROUNDWATER SAMPLE PARAMETER MEASUREMENTS Meter Type _____

Date/Time/% Recharge	pH	Cond. (mmhos/cm)	Temp	☐ deg C ☐ deg F	Turbidity (NTU)	Other parameters Color/Odor Remarks
/ /						

SAMPLING PROGRAM

Sample No.	Container #/Volume	Analysis	Preservatives	Laboratory	Comments

QUALITY CONTROL SAMPLES

Duplicate Samples

Original Sample No.	Duplicate Sample No.

Blank Samples

Type	Sample No.
Trip	
Rinsate	
Transfer	
Other:	

ATTACHMENT 3
CHAIN-OF-CUSTODY RECORD

BRC CHAIN OF CUSTODY RECORD

PROJECT CONTACT PERSON
Name: Maria Barajas-Albalawi
Address: ERM, 2525 Natomas Park Drive, Suite 350
Sacramento, CA 95833
Phone #: (916) 924-9378

LABORATORY:
Contact Person:
Address:

Phone:

FED EX #: Date:

SAMPLER(S) PRINTED NAME AND SIGNATURE

ANALYSIS REQUEST

PROJECT NAME:

PROJECT NUMBER:

SAMPLE ID	DATE	TIME	Container: Unpres	H2SO4	HNO3	HCl	NaOH	ZnAc/ NaOH	EDA

Comments/Instructions:

	Signature:	Print Name:	Company Name/Title:	Date:	Time:
RELINQUISHED BY:					
RECEIVED BY:					
RELINQUISHED BY:					
RECEIVED BY:					

For Lab Use Only: Sample Condition Upon Receipt:

ORIGINAL: Send with sample (sign only in blue or black ink)

COPIES: Retained by Sampler, Sent to Office

ATTACHMENT 4

VOLUME OF SCHEDULE 40 PVC PIPE

VOLUME OF PVC PIPE

Schedule	Diameter (inches)	Outer Diameter (inches)	Inner Diameter (inches)	Volume/LF (gallon)
40	1.25	1.660	1.380	0.08
40	2	2.375	2.067	0.17
40	3	3.500	3.068	0.38
40	4	4.500	4.026	0.66
40	6	6.625	6.065	1.50
40	8	8.625	7.981	2.60
40	12	12.750	11.938	5.82
80	2	2.375	1.939	0.15
80	4	4.500	3.826	0.60

BASIC REMEDIATION COMPANY
STANDARD OPERATING PROCEDURES
BMI COMMON AREAS
CLARK COUNTY, NEVADA

SOP-06

SAMPLE MANAGEMENT AND SHIPPING

STANDARD OPERATING PROCEDURES

SOP-06
SAMPLE MANAGEMENT AND SHIPPING

TABLE OF CONTENTS

Section **Page**

1.0 INTRODUCTION 1

2.0 DEFINITIONS 1

3.0 RESPONSIBILITIES 1

4.0 PROCEDURES 2
- 4.1 Applicability 2
- 4.2 Sample Management 2
  - 4.2.1 Sample Containers 2
  - 4.2.2 Field Sample Identification and Labeling 3
  - 4.2.3 Chain-of-Custody 5
  - 4.2.4 Sample Register/Sample Tracking 6
  - 4.2.5 Sample Preservation/Storage 7
  - 4.2.6 Quality Control Sample Management 8
- 4.3 Sample Shipping 9
  - 4.3.1 Hand-Delivered Samples 10
  - 4.3.2 Sample Shipping via Commercial Carrier 10
  - 4.3.3 Excepted Quantities 12
  - 4.3.4 Limited Quantities 13
  - 4.3.5 Standard Hazardous Materials 15
- 4.4 Sample Holding Times 16
- 4.5 Training 16

5.0 REFERENCES 16

LIST OF FIGURES

Figure 1 Sample Label 4
Figure 2 Custody Seal 6

LIST OF ATTACHMENTS

Attachment 1 Chain-of-Custody Record

DISCLAIMER

THE FOLLOWING STANDARD OPERATING PROCEDURE PROVIDES GENERAL GUIDANCE FOR BRC CONTRACTORS FOR TECHNICAL ISSUES ADDRESSED DURING ENVIRONMENTAL SITE INVESTIGATION AND REMEDIATION ACTIVITIES. IT IS NOTED, HOWEVER, THAT EACH SITE IS UNIQUE AND THESE GUIDELINES ARE NOT A SUBSTITUTE FOR COMMON SENSE AND GOOD MANAGEMENT PRACTICES BASED ON PROFESSIONAL TRAINING AND EXPERIENCE. IN ADDITION, INDIVIDUAL CONTRACT TERMS MAY AFFECT THE IMPLEMENTATION OF THIS STANDARD OPERATING PROCEDURE. BRC CONTRACTORS RESERVE THE UNRESTRICTED RIGHT TO CHANGE, MODIFY OR NOT APPLY THESE GUIDELINES IN THEIR SOLE, COMPLETE, AND UNRESTRICTED DISCRETION TO MEET CERTAIN CIRCUMSTANCES, CONTRACTUAL REQUIREMENTS, SITE CONDITIONS, OR JOB REQUIREMENTS.

1.0 INTRODUCTION

This Standard Operating Procedure (SOP) describes the requirements for sample identification, chain-of-custody (COC) documentation, handling, storage, and shipping. The purpose of this SOP is to define sample management activities as performed from the time of sample collection to the time they are received by the laboratory.

2.0 DEFINITIONS

Chain-of-Custody: An accurate written record of the possession of each sample from the time of collection in the field to the time the sample is received by the designated analytical laboratory.

Sample: Physical evidence collected for environmental measuring and monitoring. For the purposes of this SOP, a sample is restricted to solid, aqueous, air, or waste matrices. This SOP does not cover samples collected for lithologic description nor does it include remote sensing imagery or photographs.

3.0 RESPONSIBILITIES

This section presents a brief definition of field team roles and the responsibilities generally associated with them. This list is not intended to be comprehensive and additional personnel may be involved in other aspects of the project. Project team member information will be included in project-specific plans (e.g., work plan, field sampling plan, quality assurance plan), and field personnel will always consult the appropriate documents to determine project-specific roles and responsibilities. In addition, one person may serve in more than one role on any given project.

Contract Quality Control Coordinator. The Contract Quality Control Coordinator is responsible for ensuring that Basic Remediation Company's (BRC) sample management requirements are met.

Project Manager: The Project Manager is responsible for ensuring that the requirements for sample management are included in the appropriate project plans. The project manager is responsible for communicating the sample management requirements to the field staff through issuance of the project plans, conducting project kick-off meetings, work assignment forms, or any other appropriate means.

Project Quality Control Coordinator: The project Quality Control Coordinator is responsible for reviewing project plans for compliance with this SOP, conducting field audits, and for review of completed field forms. Ensures that the project-specific data quality objectives are met.

Field Team Leader and/or Field Hydrogeologist, Geologist or Engineer: Conducts the procedures described herein and, if applicable, the requirements of the project plan. Is responsible for noting any deviation to the project plans or this SOP and developing appropriate corrective action. Prepares daily logs of field activities.

Field Technician: Is responsible for sample collection, documentation, packaging, and shipping. Assists the FTL or geologist, hydrogeologist, or engineer in the implementation of tasks.

Project Chemist. The Project Chemist is responsible for coordination between the laboratory and the field team, responsible for sample tracking, and addressing data management and data quality issues with the laboratory.

4.0 PROCEDURES

4.1 Applicability

These procedures apply to all work conducted for BRC, by BRC Contractors, or under direction of BRC. The information in this SOP may be used by direct reference or incorporated into project-specific plans. Deviations or modifications to procedures addressed herein must be brought to the attention of, and approved by, Contract Quality Manager and/or the Project Manager.

4.2 Sample Management

4.2.1 Sample Containers

All samples will be placed in contaminant-free containers as specified in the U.S. Environmental Protection Agency's (EPA) *Specification and Guidance for Obtaining Contaminant-Free Sample Containers* (EPA, 1992). Containers will be stored in cool, dry, clean areas to prevent exposure to fuels, solvents, and other non-site related impacts. Sample containers with preservatives added by the laboratory will not be used if held for an extended period on the job site or exposed to extreme heat conditions.

The sample containers to be used will be dependent on the sample matrix and analyses desired. Unless specified otherwise by the project-specific work plan, the containers to be used for various analyses are described in the *BRC Quality Assurance Project Plan* (QAPP; BRC and ERM 2008). Sample containers will be filled with minimal headspace, except containers for volatile organic compound (VOC) analyses, which will be filled completely with no headspace. The no-headspace requirement applies to both soil and groundwater samples.

Once opened, the containers will be used immediately. If the container is used for any reason in the field (e.g., screening) and not sent to the laboratory for analysis, it will be discarded. Prior to discarding the contents of the used container and/or the container, disposal requirements will be evaluated to assess whether the contents or the container require disposal as a hazardous material. The containers will be stored (before and after sampling) remain separate from solvents and other volatile organic materials.

Some sample types require specific handling procedures, including:

- Compressed gas cylinders
- Radioactive substances
- Biological hazards
- Chemical warfare agents
- Drugs (controlled substances)
- Explosive ordnance
- Explosives (as per the U.S. Department of Transportation [DOT])
- Shock-sensitive materials.

If any of these materials are associated with a project, the field personnel must follow the heath and safety procedures defined in the project-specific plans.

4.2.2 Field Sample Identification and Labeling

Field Sample Identification. Protocol for field sample identification will be clearly defined in the associated project plans and be based on BRC requirements and carried forward through out the duration of the project. For example, the Air Force Center for Environmental Excellence (AFCEE) has very specific requirements for their Environmental Restoration Program

Information Management System electronic data deliverables (EDDs), which differentiates between location identification and field sample identification and limits the number of characters for each of these fields. If the location identification and field sample identification does not meet these requirements, significant problems will occur when trying to load data into or performing quality control checks of the database.

Sample Label. A sample label similar to that shown in Figure 1 will be affixed to all sample containers. The sample label, at a minimum will be completed with the following information:

- Client name (BRC), project title, or project location (sufficiently specific for data management)
- Sample location
- Sample identification number
- Date and time of sample collection
- Type of sample (grab or composite)
- Initials of sampler
- Preservative used
- Analyte(s) of interest
- Label number (if applicable)

If a sample is split with another party, identical labels will be attached to each sample container. After labeling, each sample will be refrigerated or placed upright in a cooler. Wet ice in double Ziploc™ bags (to prevent leakage) will be placed around, among, and on top of the sample bottles. Enough ice will be used so that the samples will be chilled and maintained at 4 degrees Celsius (°C) ± 2 °C prior to and during transport to the laboratory.

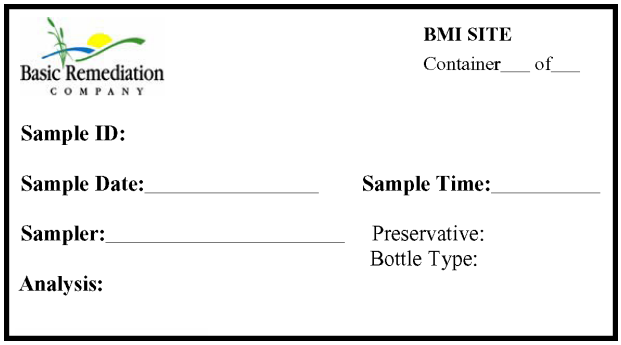

Figure 1 - Sample Label

4.2.3 Chain-of-Custody

COC procedures require a written record of the possession of individual samples from the time of collection through laboratory analyses. A sample is considered to be in custody if it is:

- In a person's possession
- In view after being in physical possession
- In a secured condition after having been in physical custody
- In a designated secure area, restricted to authorized personnel

The COC record, similar to the example shown in Attachment 1, will be used to document the samples collected and the required analyses. Information recorded by field personnel on the COC record will include the following:

- Client name (BRC)
- Project name
- Project location
- Sampling location
- Signature of sampler(s)
- Sample identification number
- Date and time of collection
- Sample designation (grab or composite)
- Sample matrix
- Signature of individuals involved in custody transfer (including date and time of transfer)
- Airbill number (if appropriate)
- Number and type of bottles collected for each analysis
- Type of analysis and laboratory method number
- Any comments regarding individual samples (e.g., organic vapor meter readings, special instructions).

All COC entries will be made using indelible ink and will be legible. Any errors will be corrected by drawing a single line through the incorrect entry, entering the correct information, and then initialing and dating the change. Unused portions of the COC form will be crossed out with a single strike through and initialed and dated by the field sampler.

If the samples are transferred directly from the field sampler to the laboratory, both the receiving and relinquishing individuals will sign the COC. If samples are transported to the laboratory by a commercial carrier, signed airbills or other applicable bills of lading will serve as evidence of custody transfer between the field sampler and carrier as well as carrier and laboratory.

The sampler will retain copies of the COC record and airbills, or bills of lading. If the COC records are sequentially numbered the record number and airbill number will be cross-referenced in the field logbook or appropriate field form.

Custody Seals. Custody seals, similar to the label shown in Figure 2, will be used on each sample (if required) and/or shipping container to ensure custody. Custody seals used during the course of the project will consist of security tape with the date and initials of the sampler. As a minimum, custody seals will be placed in two locations (the front right and back left of the cooler) across the cooler closure to ensure that any tampering is detected. If required by the client, a seal will be placed on each sample container so that it must be broken to gain access to the contents. Because VOC samples may be subject to contamination by the tape, VOC sample containers will first be secured in a Ziploc™ plastic bag. The plastic bag will then be sealed with a completed custody seal. If the seals are serially numbered, these numbers will be cross-referenced in both the field logbook and the COC form.

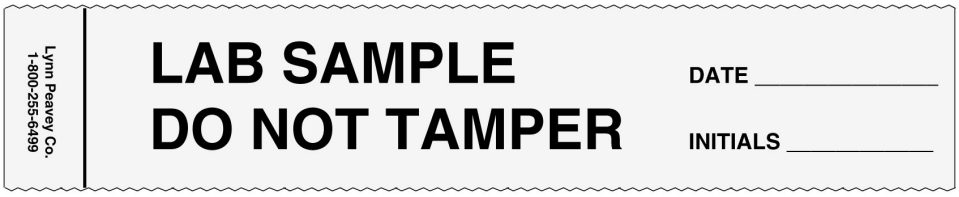

Figure 2 - Custody Seal

4.2.4 Sample Register/Sample Tracking

The sample register maybe electronic or a bound logbook with sequentially numbered pages. The sample register is used to document which samples were collected each day. The sample

register is also used as the key to correlate field samples with duplicate samples. Information that will be recorded in the sample register includes the following:

- Client name (BRC)
- Project name and location
- Job number
- Date and time of collection
- Sample identification number
- Sample designation (e.g., grab or composite, etc.)
- Sample matrix (e.g., soil, groundwater, etc.)
- Number and type of bottles
- Type of analysis
- Sample destination
- Sampler's initials

If the sample register is electronic, a hard copy of each day's sampling activities will be maintained in the field logbook. Refer to SOPs 14 and 15 Field Documentation and Field Log Books for specific details regarding documentation procedures.

4.2.5 Sample Preservation/Storage

The requirements for sample preservation are dependent on the desired analyses and the sample matrix. Unless otherwise specified by the project plan, sample preservation requirements outlined in the project QAPP (BRC and ERM 2008) will be observed. When an acid or base is used as preservative, pH paper will be used to determine if an adequate amount of preservative is being used to preserve analytical samples. When testing pH for VOC samples, a third VOC sample will be collected, tested with pH paper, and then disposed of properly.

4.2.6 Quality Control Sample Management

The number and types of quality control (QC) samples to be collected for a project will be defined in the project-specific plans. The following briefly describes field QC samples that may be collected during a field program.

Trip Blanks. Trip blanks are used to assess cross-contamination of samples for VOC analysis from sample containers or during sample transport and storage at the laboratory. Trip blanks consist of 40 milliliter (ml) amber glass vials filled by the laboratories with acidified reagent-grade water, then sealed by the laboratories prior to shipment. Trip blank vials accompany the empty bottles to the site and remain with the samples throughout sample collection and shipment.

Equipment Rinsate Blanks. Equipment rinsate blanks are used to evaluate sample equipment decontamination procedures and are prepared in the field (after decontamination of sampling equipment is complete). These samples are prepared by collecting the final equipment decontamination rinse water into the appropriate sample container.

Filter Blanks. If water samples are collected for dissolved metals analysis, a filter blank (for each lot of filters) should be collected prior to sample collection to evaluate whether the filter is a source of metals to the samples. This sample is collected in the field by passing the source water through the same filter type that will be used to filter water media for dissolved metals analysis.

Duplicate Samples. Duplicate field samples (water samples) are used to assess variability in the sample media and to assess sampling and analytical precision. A duplicate sample pair is a single aqueous grab sample that is split into two samples during collection. If the field duplicate is being submitted blind to the laboratory, one of the samples is labeled with the correct sample identification and the other is labeled with fictitious sample identification. Regardless of whether the samples are submitted blind to the laboratory or not, the field duplicate and parent sample are submitted to the same laboratory as two separate samples.

Replicate Samples. Replicate field samples (air, soil, or sediment) are used to assess variability in the sample media and to assess sampling and analytical precision. A replicate sample pair is a single soil grab sample that is split into two samples during collection. If the field replicate is being submitted blind to the laboratory one of the samples is labeled with the correct sample identification and the other is labeled with a fictitious sample name. Regardless of whether the

samples are submitted blind to the laboratory or not, the field replicate and parent sample are submitted to the same laboratory as two separate samples.

4.3 Sample Shipping

Procedures for packaging and transporting samples to the laboratory are based on the actual chemical, physical, and hazard properties of the material. The procedures may also be based on an estimation of contaminant concentrations/properties in the samples to be shipped. Samples will be identified as environmental samples, excepted quantities samples, limited quantities samples, or standard hazardous materials. Environmental samples are defined as solid or liquid samples collected for chemical or geotechnical analysis. Excepted quantities involve the shipment of a few milliliters of either an acid or base preservative in an otherwise empty sample container. Limited quantities are restricted amounts of hazardous materials that may be shipped in generic, sturdy containers. Standard hazardous material shipments require the use of stamped/certified containers.

Samples other than those listed above (refer to Section 4.2.1) must be shipped according to the requirements of Title 49, Code of Federal Regulations 173.24 (49 CFR 173.24) and other applicable Federal, state, and local regulations. Prior to the collection and shipment of these samples, shipment requirements will be researched; a written description of shipment procedures will be prepared; and the description reviewed and approved by a certified industrial hygienist prior to sample collection. These shipment procedures will be included in the project-specific plans. Examples of such samples include materials that potentially contain asbestos, radioactive materials, explosives, and chemical warfare agents, and transformer fluids (refer to Section 4.2.1).

The following paragraphs describe standard sample shipping procedures for different types of samples. Any exceptions to these procedures will be defined in the project-specific work plan. If the samples to be collected are potentially limited quantity or standard hazardous materials the most current DOT regulations must be reviewed to ensure that the most current shipping procedures are incorporated into the project-specific plans. The carrier service selected for transport may also be able to provide information needed for sample shipping procedures. It is the responsibility of the sampler to understand DOT requirements and limitations associated with the shipment of all types of samples.

No samples will be held on site for more than 24 hours, except during weekend field activities. Samples collected on the weekend will be stored under refrigeration and shipped the following

Monday. Sampling activities for analytes with extremely short holding times, such as 24 hours, will not be scheduled for weekend collection.

Occasionally, multiple coolers will be sent in one shipment to the laboratory. One cooler will have the original COC Record and the other coolers will have copies. The plastic bag in which the COC Records are place will be marked appropriately "ORIGINAL" or "COPY." In addition, the outside of the coolers will be marked to indicate how many coolers are in the shipment.

4.3.1 Hand-Delivered Samples

Aqueous or Solid Samples: For aqueous or solid samples that will be hand carried to the Contract Laboratory the following procedures apply:

- Sample labels will be completed and attached to sample containers as described in Section 4.2.
- The samples will be placed upright in a waterproof metal (or equivalent strength plastic) ice chest or cooler.
- Wet ice in double Ziploc™ bags (to prevent leakage) will be placed around, among, and on top of the sample bottles. Enough ice will be used so that the samples will be chilled during transport to the laboratory.
- To prevent the sample containers from shifting inside the cooler, the remaining space in cooler will be filled with inert cushioning material, such as shipping peanuts, additional bubble pack, or cardboard dividers.
- The original copy of the completed COC Record will accompany the samples to the laboratory.
- A copy of the COC Record will be retained for the project files.

4.3.2 Sample Shipping via Commercial Carrier

Aqueous or Solid Environmental Samples. For aqueous or non-geotechnical solid samples that are shipped to the Contract Laboratory via a commercial carrier the following procedures apply:

- Sample labels will be completed and attached to sample containers as described in Section 4.2.
- The samples will be placed upright in a waterproof metal (or equivalent strength plastic) ice chest or cooler. If the container has a drain, the drain will be taped shut and a large plastic bag used as a liner for the cooler. Each sample will be placed in a separate Ziploc™ or

bubble-wrap bag. As much air as possible will be squeezed from the bag before sealing. Bags may be sealed with a custody seal if required by the client.

- Wet ice in double Ziploc™ bags (to prevent leakage) will be placed around, among, and on top of the sample bottles. Enough ice will be used so that the samples will be chilled and maintained at 4°C ± 2°C during transport to the laboratory. Dry ice will not be used. In addition, experience has shown that blue ice is inadequate to maintain sample temperature and it will not be used for sample preservation.

- To prevent the sample containers from shifting inside the cooler, the remaining space in the cooler will be filled with inert cushioning material, such as shipping peanuts, additional bubble pack, or cardboard dividers.

- The original copy of the completed COC Record will be placed in a waterproof plastic bag and taped to the inside of the cooler lid.

- The lid will be secured by wrapping strapping tape completely around the cooler in two locations.

- As a minimum, custody seals similar to those shown in Figure 2 will be placed in two locations (the front right and back left of the cooler) across the cooler closure to ensure that any tampering is detected.

- The airbill will be filled out before the samples are handed over to the carrier. The laboratory will be notified if BRC personnel suspect that the sample contains any substance for which the laboratory personnel should take safety precautions.

- A copy of the COC Record and the signed air bill will be retained for the project files.

Air Samples. If transported by a commercial carrier, air, soil vapor, or treatment system off-gas samples will be packaged and shipped to the Contract Laboratory using the following procedures:

- A completed sample tag will be attached with a wire to the PUF/XAD-2 Cartridge, Summa canister or Tedlar™ bag for each investigative or quality control sample. All entries will be made using indelible ink. Any errors will be corrected by drawing a single line through the incorrect entry, entering the correct information, and then initialing and dating the change. The tag will include the field sample number, location (if not encoded in the sample ID), date and time of sample collection, and type of analysis. There will also be a space available for entry of the lab sample ID number.

- The samples in PUF/XAD-2 Cartridge or Tedlar™ bags will be placed upright in a waterproof metal (or equivalent strength plastic) ice chest or cooler. If the container has a drain, the drain will be taped shut and a large plastic bag used as a liner for the cooler. Bags may be sealed with a custody seal if required by the client. The Summa canisters will be placed in their original shipping container.

- To prevent the PUF/XAD-2 Cartridge or Tedlar™ bags from shifting inside the cooler, the cooler will be filled with inert cushioning material, such as shipping peanuts, additional bubble pack, or cardboard dividers.

- Wet ice in double Ziploc™ bags (to prevent leakage) will be placed around, among, and on top of the PUF/XAD-2 Cartridges. Enough ice will be used so that the samples will be chilled and maintained at 4 ± 2°C during transport to the laboratory. Neither dry ice nor blue will be used to cool samples. There are no temperature criteria for samples in Tedlar™ bags or Suma canisters.

- The original copy of the completed COC Record will be placed in a waterproof plastic bag and taped to the inside of the cooler lid or the Summa canister containers.

- The coolers or Summa canister containers will be secured by wrapping strapping tape completely around the containers in two locations.

- Custody seals, similar to the label shown in Figure 2, will be used on each shipping container to ensure custody. The seal will be placed within each cooler in such a manner that it must be broken to gain access to the contents.

- A copy of the COC Record and the signed air bill will be retained for the project files.

Geotechnical Samples. Geotechnical samples will be collected in brass sleeves as undisturbed samples or in plastic bags as bulk samples. The labeling procedures will be followed as described previously. Holding times do not apply; however, samples will be shipped as soon as possible and kept cool to prevent drying and mold growth. Undisturbed samples will be sealed in resealable plastic bags to maintain sample moisture content.

Geotechnical samples may be shipped in a sturdy box or other container. No ice is necessary. Enough packing material will be added so that samples remain undisturbed. COC procedures as described previously will be followed to generate defensible data. Hazardous nature of the samples, including any organic vapor measurements, name of suspected contaminants present, and the approximate range of concentrations, if know, should be noted on the COC Record.

4.3.3 Excepted Quantities

Usually, corrosive preservatives (e.g., hydrochloric acid, sulfuric acid, nitric acid, or sodium hydroxide) are added to otherwise empty sample bottles by the analytical laboratory prior to shipment to field sites. However, if there is an occasion whereby personnel are required to ship bottles with these undiluted acids or bases, the containers will be shipped in the following manner:

- Each individual sample container will have not more than 30 milliliters of preservative.
- Collectively, these individual containers will not exceed 500 milliliters in the same outer box or package.
- Despite the small quantities, only chemically compatible material may be placed in the same outer box, i.e., sodium hydroxide, a base, must be packaged separately from the acids.
- FedEx will transport nitric acid only in concentrations of 40 percent or less.
- A "Dangerous Goods in Excepted Quantities" Label will be affixed to the outside of the outer box or container. Information required on the label includes:
  - Signature of Shipper
  - Title of Shipper
  - Date
  - Name and Address of Shipper
  - Check of Applicable Hazard Class
  - Listing of UN Numbers for Materials in Hazard Classes.

4.3.4 Limited Quantities

Occasionally, it may become necessary to ship known hazardous materials, such as pure product (e.g., light or dense non-aqueous phase liquids). DOT regulations still permit the shipment of many hazardous materials in "sturdy" packages, such as an ice chest or cardboard box (not a specially constructed and certified container), provided the following conditions are met:

- Each sample bottle is placed in a plastic bag, and the bag is sealed. Each VOC vial is wrapped in a paper towel, and the two vials are placed in one bag. As much air as possible is squeezed from the bag before sealing. Bags may be sealed with evidence tape for additional security.
- Each bottle is placed in a separate paint can, the paint can is filled with vermiculite, and the lid is affixed to the can. The lid must be sealed with metal clips, filament, or evidence tape. If clips are used, the manufacturer typically recommends six clips.
- The outside of each can will contain the proper DOT shipping name and identification number for the sample. The information may be placed on stickers or printed legibly. A liquid sample of an uncertain nature will be shipped as a flammable liquid with the shipping name “FLAMMABLE Liquid N.O.S.” and the identification number “UN1993.” If the nature of the sample is known, 49 CFR 171 to 177 will be consulted to determine the proper labeling and packaging requirements. The carrier should be contacted to ensure that the information provided is correct.

- The cans are placed upright in a cooler that has had the drain plug taped shut inside and outside and lined with a large plastic bag. Approximately 1 inch of packing material, such as vermiculite or other type adsorbent sufficient to retain any liquid that may be spilled, is placed in the bottom of the liner. Three sizes of paint cans may be used: pint, half-gallon, and gallon. The pint or half-gallon paint cans may be stored on top of each other; however, the gallon cans are too high to stack. The cooler will be filled with additional packing material, and the liner will be taped shut. Only containers having chemically compatible material may be packaged in each cooler or other outer container.

- The COC Record will be paced inside a sealed plastic bag and attached to the inside of the cooler lid. The sampler retains one copy of the COC Record. The laboratory will be notified if the sample is suspected of containing any substance for which the laboratory personnel should take safety precautions.

- The lid will be secured by wrapping strapping tape completely around the cooler in two locations. As a minimum, custody seals similar to those shown in Figure 2 will be placed in two locations (the front right and back left of the cooler) across the cooler closure to ensure that any tampering is detected.

- The following markings are placed on the side of the cooler:

  – Proper Shipping Name (Column B, List of Dangerous Goods, Section 4, International Air Transport Association (IATA) Dangerous Goods Regulations [DGR])

  – UN Number (Column A, List of Dangerous Goods, Section 4, IATA DGR)

  – Shipper's name and address

  – Consignee's name and address

  – The words "LIMITED QUANTITY"

  – Hazard Labels (Column E, List of Dangerous Goods, Section 4, IATA DGR)

  – “Cargo Aircraft Only” (if applicable as identified in 49 CFR 172.101).

  – Two Orientation (Arrow) labels (indicating “This End Up”) placed on opposite sides of the cooler.

The Airbill/Declaration of Dangerous Goods form will be completed as follows:

- Shipper's name and address

- Consignee's name and address

- Services, Delivery and Special Handling Instructions

- Passenger or Cargo Aircraft (cross off the non-applicable items. Up to 25 pounds of flammable solid per cooler can be shipped on a passenger aircraft. Up to 1 quart of flammable liquid per cooler can be shipped on a passenger aircraft and up to 10 gallons of flammable liquid can be shipped on a cargo aircraft).

- Cross out "Radioactive" under Shipment Type

  – Nature and Quantity of Dangerous Goods

  – Proper Shipping Name (Column B, List of Dangerous Goods, Section 4, IATA DGR)

  – Class or Division (Column C, List of Dangerous Goods, Section 4, IATA DGR)

  – UN Number (Column A, List of Dangerous Goods, Section 4, IATA DGR)

  – Packing Group (Column F, List of Dangerous Goods, Section 4, IATA DGR)

  – Subsidiary Risk, if any (Column D, List of Dangerous Goods, Section 4, IATA DGR)

  – Quantity and type of packing (number and type of containers: for example, "3 plastic boxes", and the quantity per container, "2 L", is noted as "3 Plastic boxes X 2 L". This refers to 3 plastic boxes (coolers are referred to as plastic boxes) with 2 liters in each box.

  – Packing Instructions (Column G, List of Dangerous Goods, Section 4, IATA DGR). Note: Only those Packing Instructions in Column G that begin with the letter "Y" may be used. These refer specifically to the Limited Quantity provisions.

  – Authorization (Write in the words Limited Quantity)

  – Emergency Telephone Number (List 800-535-5053. This is the number for INFOTRAC.)

  – Printed Name and Title, Place and Date, Signature

4.3.5 Standard Hazardous Materials

Shipment of hazardous materials using this option presents the most difficulty and expense. However, there may be occasion whereby a hazardous material cannot be shipped under the Limited Quantity provisions, e.g., where there is no Packing Instruction in Column G, List of Dangerous Goods, IATA DGR, that is preceded by the letter "Y".

In such cases, the general instructions noted above but for non-Limited Quantity materials will apply, but with one important difference: standard hazardous materials shipment requires the use of certified outer shipping containers. These containers have undergone rigid testing and are, therefore, designated by a "UN" stamp on the outside, usually along the bottom of a container's

side. The UN stamp is also accompanied by codes specifying container type, packing group rating, gross mass, density, test pressure, year of manufacturer, state of manufacturer, and manufacturer code name. The transport of lithium batteries in Hermit Data Loggers is an example of a standard hazardous material, and where only a designated outer shipping container may be used. Contact the DOT for the most current shipping regulations.

4.4 Sample Holding Times

The holding times for samples will depend on the analysis and the sample matrix. Unless otherwise specified, holding times listed in the project QAPP (BRC and ERM 2008) will be followed.

4.5 Training

The DOT requires that all employees involved in any aspect of hazardous materials transport (shipping, transport, receipt, preparing documents) receive training at least bi-annually. Project Managers have the overall responsibility for ensuring all sampling staff have appropriate training.

5.0 REFERENCES

Basic Remediation Company (BRC) and Environmental Resources Management (ERM). 2008. BRC Quality Assurance Project Plan. BMI Common Areas, Clark County, Nevada. April.

U.S. Environmental Protection Agency (EPA), 1992. Specifications and Guidance for Obtaining Contaminant-Free Sample Containers. April.

ATTACHMENT 1
CHAIN-OF-CUSTODY RECORD

BRC CHAIN OF CUSTODY RECORD

PROJECT CONTACT PERSON
Name: Maria Barajas-Albalawi
Address: ERM, 2525 Natomas Park Drive, Suite 350
Sacramento, CA 95833
Phone #: (916) 924-9378

LABORATORY:
Contact Person:
Address:

Phone:

FED EX #: Date:

SAMPLER(S) PRINTED NAME AND SIGNATURE

ANALYSIS REQUEST

PROJECT NAME:

PROJECT NUMBER:

SAMPLE ID	DATE	TIME	Container: Unpres	H2SO4	HNO3	HCl	NaOH	ZnAc/ NaOH	EDA

Comments/Instructions:

	Signature:	Print Name:	Company Name/Title:	Date:	Time:
RELINQUISHED BY:					
RECEIVED BY:					
RELINQUISHED BY:					
RECEIVED BY:					

For Lab Use Only: Sample Condition Upon Receipt:

ORIGINAL: Send with sample (sign only in blue or black ink)

COPIES: Retained by Sampler, Sent to Office

BASIC REMEDIATION COMPANY
STANDARD OPERATING PROCEDURES
BMI COMMON AREAS
CLARK COUNTY, NEVADA

SOP-07

SOIL SAMPLING

STANDARD OPERATING PROCEDURES

SOP-07
SOIL SAMPLING

TABLE OF CONTENTS

Section **Page**

1.0 INTRODUCTION 1

2.0 DEFINITIONS 1

3.0 RESPONSIBILITIES 1

4.0 SOIL SAMPLING 2
- 4.1 Types of Samples 2
  - 4.1.1 Bulk Samples 2
  - 4.1.2 Representative Samples 2
  - 4.1.3 Undisturbed Samples 2
  - 4.1.4 Composite Samples 3
- 4.2 Sampling Methods 3
  - 4.2.1 Solid-Barrel Samplers 3
  - 4.2.2 Split-Spoon Samplers 3
  - 4.2.3 Thin-Walled Tube Samplers 4
  - 4.2.4 Continuous Coring 5

DISCLAIMER

THE FOLLOWING STANDARD OPERATING PROCEDURE PROVIDES GENERAL GUIDANCE FOR BRC CONTRACTORS FOR TECHNICAL ISSUES ADDRESSED DURING ENVIRONMENTAL SITE INVESTIGATION AND REMEDIATION ACTIVITIES. IT IS NOTED, HOWEVER, THAT EACH SITE IS UNIQUE AND THESE GUIDELINES ARE NOT A SUBSTITUTE FOR COMMON SENSE AND GOOD MANAGEMENT PRACTICES BASED ON PROFESSIONAL TRAINING AND EXPERIENCE. IN ADDITION, INDIVIDUAL CONTRACT TERMS MAY AFFECT THE IMPLEMENTATION OF THIS STANDARD OPERATING PROCEDURE. BRC CONTRACTORS RESERVE THE UNRESTRICTED RIGHT TO CHANGE, MODIFY OR NOT APPLY THESE GUIDELINES IN THEIR SOLE, COMPLETE, AND UNRESTRICTED DISCRETION TO MEET CERTAIN CIRCUMSTANCES, CONTRACTUAL REQUIREMENTS, SITE CONDITIONS, OR JOB REQUIREMENTS.

1.0 INTRODUCTION

For site investigations, primary consideration must be given to obtaining samples that are representative of existing conditions and valid for chemical analysis. The samples must not be contaminated by drilling fluids or by the sampling procedures.

This guideline provides a description of the principles of operation, applicability, and implementability of standard soil sampling methods used during site investigations. The purpose of this document is to aid in the selection of soil sampling methods that are appropriate for site-specific conditions. It is intended to be used by the project manager, project engineer, field team leader, and site geologist to develop an understanding of each method sufficient to plan, schedule, and perform soil sampling.

This guideline focuses on methods and equipment that are readily available and typically applied. It is not intended to provide an all-inclusive discussion of soil sampling methods. Sample types, samplers, and sampling methods are discussed.

2.0 DEFINITIONS

Blow Counts	Number of hammer blows needed to advance a split-spoon sampler. Blow counts are usually counted in 6-inch increments.
VOCs	Volatile organic compounds.

3.0 RESPONSIBILITIES

The **Project Manager** or **Task Leader** (a qualified Nevada Certified Environmental Manager [C.E.M.]) will select site-specific soil sampling methods with input from the field team leader and site geologist; and will maintain close supervision of the activities and progress.

The **Site Geologist** selects site specific drilling and sampling options; helps prepare technical provisions for soil sampling.

The **Field Team Leader** implements the selected drilling program and assists in the selection of drilling methods and sampling procedures.

The **Rig Geologist** supervises and/or performs actual sampling procedures.

4.0 SOIL SAMPLING

4.1 Types of Samples

Four basic types of samples are collected in site investigation work: bulk samples, representative samples, "undisturbed" samples, and composite samples.

4.1.1 Bulk Samples

Bulk samples are generally a shovelful or trowelful of material taken from cuttings. There is usually significant uncertainty regarding which interval the cuttings represent. This type of sampling is rarely used and is the least accurate of the four basic sample types.

4.1.2 Representative Samples

Representative samples are collected with a drive or push tube. They do not represent undisturbed conditions but do represent all the constituents that exist at a certain interval.

4.1.3 Undisturbed Samples

"Undisturbed" samples are high-quality samples collected under strictly controlled conditions to minimize the structural disturbance of the sample. Undisturbed samples should be collected when all the presampling relationships need to be preserved. Every effort is made to avoid altering the sample during the sampling process. Undisturbed samples are generally required for geotechnical work and are rarely necessary to assess environmental quality.

4.1.4 Composite Samples

Composite samples are a blend or mix of sample material, usually combined from two or more stratigraphic intervals and mixed in such a way as to represent the total borehole. Homogenized samples are composited over a discreet interval. For example, if a sample represented the 10- to 11.5-foot interval, the material from that interval would be mechanically blended before being put into the appropriate sample container. VOC samples are never composited or homogenized.

4.2 Sampling Methods

4.2.1 Solid-Barrel Samplers

The diameter of the solid barrel sampler is 1 to 6 inches and the length is between 12 and 60 inches. The sampler is usually steel or stainless steel and can be used with thin-walled liners that can be slid into or out of the sampler barrel. Liners may be made of brass, aluminum, stainless steel, or synthetic materials. Liner materials are acceptable based on the types of materials, tests, and analyses performed.

4.2.2 Split-Spoon Samplers

Split-spoon samplers are the most commonly used samplers for monitoring and geotechnical work and can be applied to a variety of drilling methods. Split-spoon samplers are usually steel or stainless steel, are tubular in shape, and are split longitudinally into two semicylindrical halves. They may be lined or unlined. Liners are made of brass, aluminum, stainless steel, or various synthetic materials. Split-spoon samplers are generally available in 2-, 2.5-, 3-, 3.5-, and 4-inch outside diameters (OD). Lengths range between 12 and 60 inches. The 18-inch long sampler is the most commonly used. Three 6-inch liners are generally used with this sampler. Sixty-inch samplers are used when continuous coring is necessary.

Driving (hammering) is the usual method of obtaining split-spoon samples up to 2.5 feet in length. Samples are collected from the split-spoon sampler by driving the sampler into undisturbed material beneath the bottom of the casing or borehole with a weighted hammer. For most sampling, a 140-pound hammer is used. The hammer may either be at the ground surface or

in-hole. The number of blow counts per 6-inch increment of total drive is recorded. An estimate of the density and consistency of the subsurface soils can be made from the relationships among the hammer weight, drop, and number of blows required to advance the split spoon in 6-inch increments.

If the sampler cannot be advanced 6 inches with a reasonable number of blows (usually about 50), sampler refusal occurs and the sampling effort at that particular interval is terminated. If "auger refusal" has not occurred, the hole is advanced to the next sampling interval where another attempt at sample retrieval is made.

After the split spoon is removed, it is opened for visual inspection and classification. If an adequate volume of sample has not been retrieved, additional sample shall be collected from a second sampler from the interval immediately below the preceding interval.

If VOCs are to be analyzed, the sample is immediately transferred into the appropriate sampling jars upon retrieval of the split spoon from the borehole. Following sample description, sample material for non-VOC analyses may be composited, homogenized, or collected from discrete intervals as provided in the project work plan. Care shall be taken to ensure that the sample collected is representative of the sample interval of interest, and not slough material. All slough material shall be discarded. If a representative sample is to be retained for future reference, the sample must be stored in a container that is compatible with potential contaminants in the sample and minimizes the potential for accidental spillage.

4.2.3 Thin-Walled Tube Samplers

The thin-walled tube (Shelby tube) sampler is an 18-, 30-, or 36-inch long, thin-walled steel, aluminum, brass, or stainless steel tube equipped with a connector head. It is primarily used in soft or clayey formations where it will provide more sample recovery than a split-spoon sampler and when relatively undisturbed samples are desired. The most commonly used sampler has a 3-inch OD and a 2.81-inch cutting diameter, and is 30 inches long.

Pressing or pushing without rotation is the normal mode of advance for the thin-walled sampler. If the tube cannot be advanced by pressing, it may become necessary to drive the sample with drill rods and hammers without rotation. The tubes are generally allowed to stay in the hole 10 to 15 minutes to allow the buildup of skin friction prior to removal. The tube is then rotated to separate it from the soil beneath it, prior to being brought to the surface.

After removal, the sample is inspected to ensure an adequate sample volume has been collected. If an inadequate volume has been collected, the above sampling procedure is repeated.

Upon retrieval, a description of the soil core is recorded in the logbook and any disturbed soil removed from the end of the tube. VOC samples are removed and placed in the appropriate sample containers immediately upon sample retrieval. Thin-walled tubes are capped with nonreactive material for transport.

4.2.4 Continuous Coring

Continuous coring is usually performed with a 60-inch split-spoon sampler that is advanced by pressing without rotating while the drill bit is rotating. The sampling tube is lowered into and retrieved from the augers or drill stem using a wireline or drill rods.

The sampling tube is locked into place so the sampler protrudes slightly ahead of the drill bit. As the bit is advanced, the auger is pressed into the formation. After the hole has been advanced the length of the sampling tube, the full sampler is retrieved and an empty sampler is put down the hole. Sampling procedures will follow those described in Section 4.2.2.

BASIC REMEDIATION COMPANY
STANDARD OPERATING PROCEDURES
BMI COMMON AREAS
CLARK COUNTY, NEVADA

SOP-08

TRENCHING AND TEST PITTING

STANDARD OPERATING PROCEDURES

SOP-08
TRENCHING AND TEST PITTING

TABLE OF CONTENTS

Section **Page**

1.0 INTRODUCTION 1

2.0 DEFINITIONS 1

3.0 RESPONSIBILITIES 2

4.0 TRENCH AND TEST PIT CONSTRUCTION 2
- 4.1 General 2
  - 4.1.1 Safety Procedures 3
  - 4.1.2 Stability 4
- 4.2 Field Recording and Sampling Techniques 5
- 4.3 Backfilling 6
- 4.4 Decontamination 7

DISCLAIMER

THE FOLLOWING STANDARD OPERATING PROCEDURE PROVIDES GENERAL GUIDANCE FOR BRC CONTRACTORS FOR TECHNICAL ISSUES ADDRESSED DURING ENVIRONMENTAL SITE INVESTIGATION AND REMEDIATION ACTIVITIES. IT IS NOTED, HOWEVER, THAT EACH SITE IS UNIQUE AND THESE GUIDELINES ARE NOT A SUBSTITUTE FOR COMMON SENSE AND GOOD MANAGEMENT PRACTICES BASED ON PROFESSIONAL TRAINING AND EXPERIENCE. IN ADDITION, INDIVIDUAL CONTRACT TERMS MAY AFFECT THE IMPLEMENTATION OF THIS STANDARD OPERATING PROCEDURE. BRC CONTRACTORS RESERVE THE UNRESTRICTED RIGHT TO CHANGE, MODIFY OR NOT APPLY THESE GUIDELINES IN THEIR SOLE, COMPLETE, AND UNRESTRICTED DISCRETION TO MEET CERTAIN CIRCUMSTANCES, CONTRACTUAL REQUIREMENTS, SITE CONDITIONS, OR JOB REQUIREMENTS.

1.0 INTRODUCTION

This Standard Operating Procedure (SOP) establishes guidelines for conducting test pit and trench excavations at hazardous waste sites.

Shallow test pits accomplish the following:

- Permit the *in-situ* condition of the ground to be examined in detail both laterally and vertically
- Provide access for taking samples and for performing *in-situ* tests
- Provide a means of determining the orientation of discontinuities in the ground

Periodically, a portion of a site investigation will focus on abandoned subsurface structures or an area that may contain, or was at one time a dumping ground for, various types of hazardous and nonhazardous waste. Before drilling soil borings in these areas, excavation of a trench or test pit may be necessary to clear drilling areas of debris and identify sources or geophysical anomalies. Excavations can be readily extended to locate the boundaries of abandoned foundations, landfills, or trenches. In suitable ground, shallow excavations may provide an efficient and economic method to evaluate the shallow subsurface environment of a site.

2.0 DEFINITIONS

Trench or Test Pit	Linear excavation, of varying width, usually used as an exploratory method to locate landfill boundaries or buried structures, or to characterize the soil/fill sequence at a site.
Ground Crew	Composed of excavating support crew and sampling crew.

3.0 RESPONSIBILITIES

The **Project Manager** or **Task Leader** (a qualified Nevada Certified Environmental Manager [C.E.M.]) will select site-specific soil sampling methods with input from the Site Geologist/Field Team Leader and will maintain close supervision of the activities and progress of the work.

The **Site Geologist/Field Team Leader** selects excavation options, implements the trenching/test pit program, assists in the preparation of technical provisions.

The **Sampling Crew** performs sampling procedures.

4.0 TRENCH AND TEST PIT CONSTRUCTION

4.1 General

Trench and test pit excavation is carried out either manually or by using standard equipment such as backhoes, trenching machines, track dozers, track loaders, excavators, and scrapers. Operators of excavating equipment must be skilled and experienced in its safe use for digging test pits and trenches. A typical excavator with an extending backhoe arm can excavate to a depth of approximately 15 feet. If investigations are required to penetrate beyond 15 feet, soil borings may be a more feasible method.

A tailgate safety meeting is conducted by a designated on-site safety officer before commencing excavation.

Prior to all excavations, the Field Team Leader must confirm that underground utilities (electric, gas, telephone, water, etc.) within the proposed areas of excavation have been cleared or marked off. Certain underground services may not be picked up by detectors. Careful excavation, use of probing rods, and the ground crew watching for early signs can help prevent damaging or puncturing underground services.

Prior to commencing excavation, standard signals shall be developed and reviewed for rapid and efficient communication between the backhoe operator and the ground crew. Before approaching

areas with operating equipment, the sampling and support crew must verify that the operator has noted their presence.

Upon locating the area for excavation, the backhoe operator determines wind direction and positions the machine upwind of the area of excavation. The backhoe operator outlines the area of investigation by extending the bucket arm to its maximum length and traces a 180-degree outline around the area to be excavated. The support crew cordons off the exclusion zone with a wooden lath and brightly colored "caution" tape, or other appropriate temporary fencing.

Once the excavation equipment has been positioned and stabilized, excavation can commence. If the area of investigation is beneath vegetative cover or surface debris, the backhoe operator removes the surface material to allow a clear and safe working area. Excavated soil is stockpiled away from the immediate edge to one side of the trench to prevent excavated soil from re-entering the trench or test pit and to reduce pressure on the sidewalls. When possible, the soil is deposited downwind of the ground crew and the machine operator. Shifting winds may cause the machine and its operator and the ground crew to periodically move in order to remain upwind. Under some conditions where remaining upwind is not possible, it may be necessary to curtail further activities. The support crew should regularly check the machine operator who, if in a partially enclosed cabin, may be susceptible to fumes/gases.

4.1.1 Safety Procedures

Material brought to the surface should be treated as hazardous and contained in an appropriate manner. If the material is wet, the liquid seeping from the stockpile should be collected, sampled, and disposed of in accordance with applicable regulations.

Entry of personnel into pits or trenches is strictly prohibited unless specifically approved and strict adherence to state and federal Occupational Safety and Health Administration guidelines is observed.

Unless full lateral support of the side walls is provided, personnel should never trench deeper than 4 feet (chest height) when personnel will be working in the trench. Any personnel entering the trench may be exposed to toxic or explosive gases and an oxygen-deficient environment. Air

monitoring is required before and during entry and appropriate respiratory gear, protective clothing, and egress/rescue equipment is mandatory. Caution should be exercised at all times. For example, in combustible fills, temperature measurements may be necessary. On waste tips, burning material below ground may give rise to toxic or flammable fumes from the hole; tip fires may also create voids that may collapse under the weight of an investigation rig or backhoe machine. Lagoons within waste tips may be areas of very soft ground.

At least two people must be present at the immediate site. Ladder access/egress out of the pit must be installed before entry. Two ladders for worker access/egress must be provided for every 25 feet of lateral distance of a trench and, at a minimum, ladders shall be positioned at opposite ends of trenches less than 25 feet in length.

Care should be taken to ensure that personnel do not stand too close to the edge of the trench especially during sampling or depth measurements; the combination of depositing soil adjacent to the pit and the risk of caving or toppling of the side walls in unstable soils can lead to unsafe conditions.

4.1.2 Stability

Depending on the desired depth of excavation, the trench may require shoring to prevent the sides from collapsing. Lateral support may be provided by a support frame system, or by benching or sloping the sides of the excavation or trench to an appropriate angle. Any timbering or support systems must be installed by qualified personnel.

Groundwater may be pumped out of the pit to stabilize the sidewalls and to keep the excavation dry, allowing a greater depth to be reached especially in granular materials that are below the water table.

Near-vertical slopes can stand for seconds or months, depending on the types of material involved and various other factors affecting the stability. Although personnel should not be entering the excavation, it is prudent to know the possible behavior of the various soil types and conditions that may be encountered. Excavations into fill are generally much more unstable than those in natural soil.

Excavations in very soft, normally consolidated clay may stand vertically without support for short periods. Long-term stability is dependent on a combination of factors: the type of soils, pore pressures, and other forces acting within the soil, and adverse weather effects. Fissured clays can fail along well-defined shear planes; therefore, their long-term stability is not dependent on their shear strength and is difficult to predict.

Dry sands and gravels can stand at slopes equal to their natural angle of repose no matter what the depth of the excavation (angles can range from approximately 28 to 46 degrees depending on the angularity of grains and relative density).

Damp sands and gravels possess some cohesion and can stand vertically for short periods. Water-bearing sands, however, are very difficult in open excavations. If they are cut steeply, as in trench excavation, seepage of water from the face will result in erosion at the toe followed by collapse of the upper part of the face until a stable angle of approximately 15 to 20 degrees is obtained.

Dry silts may stand unsupported vertically, especially if slightly cemented. Wet silt is the most troublesome material to excavate. Seepage leads to slumping and undermining with subsequent collapse, eventually reaching a very shallow angle of repose.

It should not be taken for granted that excavations in rock will stand with vertical slopes unsupported. Their stability depends on the soundness, angle of bedding planes, and the degree of shattering. Unstable conditions can occur if bedding planes slope steeply towards the excavation, especially if groundwater is present to act as lubrication.

4.2 Field Recording and Sampling Techniques

The field record should include a plan giving the location, dimensions, and orientation of the pit, together with dimensioned sections of the sidewalls, description of the strata encountered, and details of any sampling or testing carried out. A photographic record of the test pit, with an appropriate scale, would be ideal.

Any groundwater encountered should be noted with regard to its depth and approximate rate of seepage. If possible, the groundwater level within the test pit should be monitored for 20 minutes, with readings taken at 5-minute intervals.

Working from the ground surface the technician can prepare a visual log of the strata/soil profile and decide the interval of sampling. Samples from excavations can be either disturbed or undisturbed.

Disturbed samples are taken from the excavator bucket or from the spoil. To obtain a representative sample of the material at a certain depth, care must be taken not to include scrapings from the sidewalls.

Undisturbed samples may be block samples, cut from *in situ* material; tube samplers may be driven into the floor of the pit using a jarring link and drill rods and extracted using the backhoe of the excavator.

Samples of groundwater or leachate may be taken using telescoping poles or a small bailer.

The required size of the samples will vary according to the intended analysis/testing to be carried out.

4.3 Backfilling

The test pits or trenches should be backfilled immediately upon completion of the hole. Prior to backfilling, pits and test trenches should be inspected to make sure it is safe to approach the excavation with the backfill and equipment. Poorly compacted backfill will cause settlement at the ground surface and hence the spoil should be recompacted in several thin layers using the excavator bucket and any surplus material placed over the top of the pit.

In certain areas where soil borings are not required, the pit may be used to install gas monitoring standpipes or piezometers. The granular filter is kept in place using sacking while the backfill material is carefully emplaced around the instrument.

If a sealing layer has been penetrated during excavation, resulting in a groundwater connection between contaminated and previously uncontaminated zones, the backfill material must represent the original conditions or be impermeable. Backfill material could comprise a soil-bentonite mix or a cement-bentonite grout.

4.4 Decontamination

The purpose of decontamination and cleaning procedures during sampling tasks is to prevent foreign contamination of the samples and cross contamination between sites. All sampling and excavation equipment must be decontaminated before use. All fluids generated by decontamination must be contained in U.S. Department of Transportation (DOT)-approved 55-gallon drums or other appropriate containers as specified in the site work plan.

BASIC REMEDIATION COMPANY
STANDARD OPERATING PROCEDURES
BMI COMMON AREAS
CLARK COUNTY, NEVADA

SOP-09

SURFACE WATER AND SEDIMENT SAMPLING

STANDARD OPERATING PROCEDURES

SOP-09
SURFACE WATER AND SEDIMENT SAMPLING

TABLE OF CONTENTS

Section **Page**

1.0 INTRODUCTION 1

2.0 DEFINITIONS 1

3.0 RESPONSIBILITIES 1

4.0 PROCEDURES 2
- 4.1 Background 2
- 4.2 Defining the Sampling Program 2
  - 4.2.1 Sampling Program Objectives 2
  - 4.2.2 Location of Sampling Stations 4
  - 4.2.3 Frequency of Sampling 5
- 4.3 Surface Water Sample Collection 5
  - 4.3.1 Streams, Rivers, Outfalls, and Drainage Features (Ditches, Culverts) 5
  - 4.3.2 Lakes, Ponds, and Reservoirs 6
  - 4.3.3 Estuaries 7
  - 4.3.4 Sampling Equipment and Techniques 8
- 4.4 Sediment Sampling 14
  - 4.4.1 General 14
  - 4.4.2 Sampling Equipment and Techniques 14

5.0 REFERENCES 18

LIST OF FIGURES

Figure 1 Examples of Open Mouth Samplers 10
Figure 2 Examples of Thief Samplers 11
Figure 3 Depth-Integrating Samplers 13

DISCLAIMER

THE FOLLOWING STANDARD OPERATING PROCEDURE PROVIDES GENERAL GUIDANCE FOR BRC CONTRACTORS FOR TECHNICAL ISSUES ADDRESSED DURING ENVIRONMENTAL SITE INVESTIGATION AND REMEDIATION ACTIVITIES. IT IS NOTED, HOWEVER, THAT EACH SITE IS UNIQUE AND THESE GUIDELINES ARE NOT A SUBSTITUTE FOR COMMON SENSE AND GOOD MANAGEMENT PRACTICES BASED ON PROFESSIONAL TRAINING AND EXPERIENCE. IN ADDITION, INDIVIDUAL CONTRACT TERMS MAY AFFECT THE IMPLEMENTATION OF THIS STANDARD OPERATING PROCEDURE. BRC CONTRACTORS RESERVE THE UNRESTRICTED RIGHT TO CHANGE, MODIFY OR NOT APPLY THESE GUIDELINES IN THEIR SOLE, COMPLETE, AND UNRESTRICTED DISCRETION TO MEET CERTAIN CIRCUMSTANCES, CONTRACTUAL REQUIREMENTS, SITE CONDITIONS, OR JOB REQUIREMENTS.

1.0 INTRODUCTION

This Standard Operating Procedure (SOP) describes methods and equipment commonly used for collecting environmental samples of surface water and aquatic sediment for either on-site examination or chemical testing, or for laboratory analysis.

The information presented in this guideline is generally applicable to all environmental sampling of surface waters and aquatic sediments, except where the analyte(s) may interact with the sampling equipment. The collection of concentrated sludges or hazardous waste samples from disposal or process lagoons often requires methods, precautions, and equipment different from those described herein.

Specific sampling problems may require the adaptation of existing equipment or design of new equipment. Such innovations should be described in the sampling plan (or addendum to the sampling plan if the remedial investigation is ongoing) and brought to the attention of the project manager.

2.0 DEFINITIONS

Environmental Sample	Low constituent-concentration sample typically collected off site and not requiring U.S. Department of Transportation (DOT) hazardous waste labeling or Contract Laboratory Program (CLP) handling as a high hazard sample.
Hazardous Waste Sample	Medium to high constituent-concentration sample (e.g., source material, sludge, leachate) requiring DOT labeling and CLP handling as a high hazard sample.

3.0 RESPONSIBILITIES

The **Field Team Leader** or **Task Leader** (a qualified Nevada Certified Environmental Manager [C.E.M.]) has overall responsibility for the correct implementation of surface water and sediment sampling activities, including review of the sampling plan with, and any necessary training of, the sampling technician(s). The actual collection, packaging, documentation (sample label and log sheet, chain-of-custody record, etc.) and initial custody of samples will be the responsibility of the sampling technician(s).

4.0 PROCEDURES

4.1 Background

Collecting a representative sample from surface water or sediments is often difficult because of water movement, stratification, or the intermittent nature of these media. To collect representative samples, sampling bias must be standardized relative to site selection; sampling frequency; sample collection; sampling devices; and sample handling, preservation, and identification.

Representativeness is a qualitative description of the degree to which an individual sample accurately reflects population characteristics or parameter variations at a sampling point. It is therefore an important quality not only for assessment and quantification of environmental threats posed by the site, but also for providing information for engineering design and construction. Proper sample location selection and sample collection methods are important to ensure that a truly representative sample has been taken. Regardless of scrutiny and quality control applied during laboratory analyses, reported data are no better than the confidence that can be placed in the representativeness of the samples.

4.2 Defining the Sampling Program

Factors that must be considered in developing a sampling program for surface water or sediments, including study objectives, are accessibility; site topography; flow, mixing, and other physical characteristics of the water body; point and diffuse sources of contamination; and personnel and equipment available to conduct the study. For waterborne constituents, dispersion depends on the vertical and lateral mixing within the body of water. For sediments, dispersion depends on bottom current or flow characteristics, sediment characteristics (density, size) and geochemical properties (which affect adsorption/desorption). The professional developing the sampling plan must therefore know not only the mixing characteristics of streams and lakes, but also must understand the role of fluvial-sediment transport, deposition, and chemical sorption.

4.2.1 Sampling Program Objectives

The objective of surface water sampling is to determine the surface water quality entering, leaving, or remaining within the site. The scope of the sampling program must consider the sources and potential pathways for transport of contamination to or in a surface water body. Sources may include point sources (leaky tanks, outfalls, etc.) or nonpoint sources (e.g., spills).

The following are major pathways for surface water contamination (not including airborne deposition):

- Overland runoff
- Leachate influx to the water body
- Direct waste disposal (solid or liquid) into the water body
- Groundwater influx

The relative importance of these pathways, and therefore the design of the sampling program, is controlled by the physiographic and hydrologic features of the site, the drainage basin(s) that encompass the site, and the history of site activities.

Physiographic and hydrologic features to be considered include the following:

- Slopes and runoff direction
- Areas of temporary flooding or pooling
- Tidal effects
- Artificial surface-runoff controls such as berms or drainage ditches (and when they were constructed relative to site operation)
- Locations of springs, seeps, marshes, etc.

In addition, the obvious considerations such as the location of man-made discharge points to the nearest stream (intermittent or flowing), pond, lake, estuary, etc., should not be overlooked.

A more subtle consideration in designing the sampling program is the potential for dispersion of dissolved or sediment-associated contaminants away from the source. The dispersion could lead to a more homogeneous distribution of contamination at low or possibly non-detectable concentrations. Such dispersion, however, does not always readily occur. For example, obtaining a representative sample of contamination from a main stream immediately below an outfall or a tributary is difficult because the inflow frequently follows a stream bank with little lateral mixing for some distance. Sampling alternatives to overcome this situation are to 1) move the sampling site far enough downstream to allow for adequate mixing, or 2) collect integrated samples in a cross section. Also, nonhomogeneous distribution is a particular problem with regard to

sediment-associated contaminants, which may accumulate in low-energy environments (coves, river bends, deep spots, or even behind boulders) near or distant from the source, while higher energy areas (main stream channels) near the source may show no contaminant accumulation.

The distribution of particulates within a sample is an important consideration. Many organic compounds are only slightly water-soluble and tend to be adsorbed by particulate matter. Nitrogen, phosphorus, and heavy metals may also be transported by particulates. Samples must be collected with a representative amount of suspended material; transfer from the sampling device should include transferring a proportionate amount of the suspended material.

The first steps in selecting sampling locations, therefore, are to 1) review site history, 2) define the hydrologic boundaries and features of the site, and 3) identify the sources, pathways and potential distribution of contamination. Based on these considerations, the numbers, types, and general locations of required samples upgradient (for background measurement) on site and downgradient can be identified.

4.2.2 Location of Sampling Stations

Accessibility is the primary factor affecting sampling costs. The desirability and utility of a sample for analysis and description of site conditions must be balanced against the costs of collection as controlled by accessibility. Bridges or piers are the first choice for locating a sampling station on a stream because bridges provide ready access and permit the sampling technician to sample any point across the stream. A boat or pontoon (with an associated increase in cost) may be needed to sample locations on lakes and reservoirs, as well as those locations on larger rivers. Frequently, however, a boat will take longer to cross a water body and will hinder manipulation of the sampling equipment. Wading for samples is not recommended unless it is known that contaminant levels are low enough that skin contact will not produce adverse health effects. This provides a built-in margin of safety in the event that wading boots or other protective equipment should fail to function properly. If it is necessary to wade into the water body to obtain a sample, the sampler should be careful to minimize disturbance of bottom sediments and must enter the water body downstream of the sampling location. If necessary, the sampling technician should wait for the sediments to settle before taking a sample.

Sampling in marshes or tidal areas may require the use of an all-terrain-vehicle. The same precautions mentioned above with regard to sediment disturbance will apply.

Under ideal and uniform contaminant dispersion conditions in a flowing stream, the same concentrations of each would occur at all points along the cross section. This situation is most

likely downstream of areas of high turbulence. Careful site selection is needed to ensure, as closely as possible, that samples are taken where uniform flow or deposition and good mixing conditions exist.

The availability of streamflow and sediment discharge records can be an important consideration in choosing sampling sites in streams. Streamflow data in association with contaminant concentration data are essential for estimating the total contaminant loads carried by the stream. If a gauging station is not conveniently located on a selected stream, the project hydrologist should explore the possibility of obtaining streamflow data by direct or indirect methods.

4.2.3 Frequency of Sampling

The sampling frequency and the objectives of the sampling event will be defined by the work plan. For single-event site- or area-characterization sampling, both bottom material and overlying water samples should be collected at the specified sampling stations. If valid data are available on the distribution of the contaminant between the solid and aqueous phases, it may be appropriate to sample only one phase, although this is not often recommended. If samples are collected primarily for monitoring purposes, consisting of repetitive, continuing measurements to define variations and trends at a given location, water samples should be collected at a pre-established and constant interval as specified in the work plan (often monthly or quarterly) and during droughts and floods. Samples of bottom material should be collected from fresh deposits at least yearly, and preferably during both spring and fall seasons.

The variability in available water-quality data should be evaluated before deciding on the number and collection frequency of samples required to maintain an effective monitoring program.

4.3 Surface Water Sample Collection

4.3.1 Streams, Rivers, Outfalls, and Drainage Features (Ditches, Culverts)

Methods for sampling streams, rivers, outfalls, and drainage features at a single point vary from the simplest of hand-sampling procedures to the more sophisticated multipoint sampling techniques known as the equal-width-increment (EWI) method or the equal-discharge-increment (EDI) methods (defined below).

Samples from different depths or cross-sectional locations in the water course taken during the same sampling episode should be composited. However, samples collected along the length of

the watercourse or collected at different times may reflect differing inputs or dilutions and therefore should not be composited. Generally, the number and type of samples to be taken depend upon the width of the river, depth, discharge, and the suspended sediment the river transports. The greater number of individual points that are sampled, the more likely that the composite sample truly will represent the overall characteristics of the water.

In small streams less than about 20 feet wide, a sampling site can generally be found where the water is well mixed. In such cases, a single grab sample taken at mid-depth in the center of the channel is adequate to represent the entire cross section.

For larger streams, at least one vertical composite should be taken with one sample each from just below the surface, at mid-depth, and just above the bottom. Measurements of dissolved oxygen (DO), pH, temperature, conductivity, etc., shall be made on each aliquot of the vertical composite and on the composite itself. For rivers, several vertical composites should be collected.

4.3.2 Lakes, Ponds, and Reservoirs

Lakes, ponds, and reservoirs have a much greater tendency to stratify than rivers and streams do. The relative lack of mixing requires that a high number of samples be obtained to adequately represent the overall characteristics of the water body.

The number of water sampling sites on a lake, pond, or impoundment will vary with the size and shape of the basin. In ponds and small lakes, a single vertical composite at the deepest point may be sufficient. Similarly, measurements of DO, pH, temperature, etc., are to be conducted on each aliquot of the vertical composite. In naturally formed ponds, the deepest point may have to be determined empirically; in impoundments, the deepest point is usually near the dam.

In lakes and larger reservoirs, several vertical composites should be composited to form a single sample. These verticals are often taken along a transect or grid. In some cases, it may be of interest to form separate composites of epilimnetic and hypolimnetic zones. In a stratified lake, the epilimnion is the upper, warmer, and less dense layer of lake water (above the thermocline) that is exposed to the atmosphere. The hypolimnion is the lower, "confined" layer that is only mixed with the epilimnion and vented to the atmosphere during seasonal "overturn" (when density stratification disappears). These two zones thus may have very different concentrations of contaminants if input is only to one zone, if the contaminants are volatile (and therefore vented from the epiliminion but not the hypolimnion), or if the epilimnion only is involved in

short-term flushing (i.e., inflow from or outflow to shallow streams). Normally, however, a composite consists of several verticals with samples collected at various depths.

In lakes with irregular shape and with bays and coves that are protected from the wind, separate composite samples may be needed to adequately represent water quality since it is likely that only poor mixing will occur between these areas. Similarly, additional samples should be taken where discharges, tributaries, land-use characteristics, and other such factors are suspected of influencing water quality.

Most lake measurements should be made in-situ using sensors and automatic readout or recording devices. Single and multiparameter instruments are available for measuring temperature, depth, pH, oxidation-reduction potential, specific conductance, DO, some cations and anions, and light penetration.

4.3.3 Estuaries

Estuarine areas are by definition zones where inland fresh waters (both surface and ground) mix with oceanic saline waters. Estuaries are generally categorized into three types, depending on freshwater inflow and mixing properties. Knowledge of the estuary type is necessary to determine sampling locations. Following are the three types of estuaries:

- Mixed estuary—characterized by the absence of a vertical halocline (gradual or no marked increase in salinity in the water column) and a gradual increase in salinity seaward. Typically this type of estuary is shallow and is found in major freshwater sheetflow areas. Since they are well mixed, the sampling locations are not critical in this type of estuary.

- Salt wedge estuary—characterized by a sharp increase in salinity with depth and stratified freshwater flow along the surface. In these estuaries, the vertical mixing forces cannot override the density differential between fresh and saline waters. In effect, a salt wedge tapering inland moves horizontally, back and forth, with the tidal phase. If contamination is being introduced into the estuary from upstream, water sampling from the salt wedge may miss it entirely.

- Oceanic estuary—characterized by salinity approaching full-strength oceanic waters. Seasonally, freshwater inflow is small, with the preponderance of the fresh-saline water mixing occurring near, or at, the shoreline.

Sampling in estuarine areas is normally based upon the tidal phases, with samples collected on successive slack tides (i.e., when the tide turns). Estuarine sampling programs should include vertical salinity measurements at 1- to 5-foot increments coupled with vertical DO and temperature profiles.

4.3.4 Sampling Equipment and Techniques

The selection of sampling equipment depends on the site conditions and sample type required. In addition, the chemical compatibility of the sampling equipment with the constituents of concern must be addressed prior to initiating the sampling program. The following are the most frequently used samplers:

- Open-mouth bottle sampler (dip sampler)
- Weighted bottle sampler
- Hand pump
- Thief samplers
- Depth-Integrating sampler

The open-mouth bottle sampler (dip sampler) and the weighted bottle sampler are used most often.

The criteria for selecting a sampler include the following:

- Disposable and/or easily decontaminated
- Inexpensive (if the item is to be disposed of)
- Ease of operation, particularly if personnel protection required is above Level D
- Nonreactive/noncontaminating—Teflon®-coated, glass, stainless steel, or polyvinyl chloride (PVC) sample chambers are preferred (in that order)

Each sample (grab or each aliquot collected for compositing) should be measured for the following:

- Specific conductance

- Temperature
- pH (optional)
- DO (optional)

These items should be measured for as soon as the sample is recovered. These analyses will provide information on water mixing/stratification and potential contamination.

Open-Mouth Bottle Sampling (Dip Sampling)

Water is often sampled by filling a container, either attached to a pole or held directly, from just beneath the surface of the water (a dip or grab sample [Figure 1]). Constituents measured in grab samples are only indicative of conditions near the surface of the water and may not truly represent the total concentration distributed throughout the water column and in the cross section. Therefore, dip samples should be augmented whenever possible with samples that represent both dissolved and suspended constituents and both vertical and horizontal distributions.

Sample bottles containing preservatives should never be used to directly collect surface water samples.

Weighted Bottle Sampling

A grab sample can also be taken using a weighted holder that allows a sample to be lowered to any desired depth, opened for filling, closed, and returned to the surface. This allows discrete sampling with depth. Several of these samples can be combined to provide a vertical composite. Alternatively, an open bottle can be lowered to the bottom and then raised to the surface at a uniform rate. In this manner the sample will be collected throughout the depth interval and will be filled just before it reaches the surface. Using either method, the resulting sample will roughly approach what is known as a depth-integrated sample.

A closed, weighted bottle sampler consists of a stoppered glass or plastic bottle, a weight and/or holding device, and lines to open the stopper and lower or raise the bottle (Figure 1). The procedure for sampling is:

1. Gently lower the sampler to the desired depth so as not to remove the stopper prematurely (watch for bubbles).

2. Pull out the stopper with a sharp jerk of the sampler line.

3. Allow the bottle to fill completely, as evidenced by the cessation of air bubbles.

4. Raise the sampler and cap the bottle

5. Decontaminate the outside of the bottle. The bottle can be used as the sample container (as long as original bottle is an approved container).

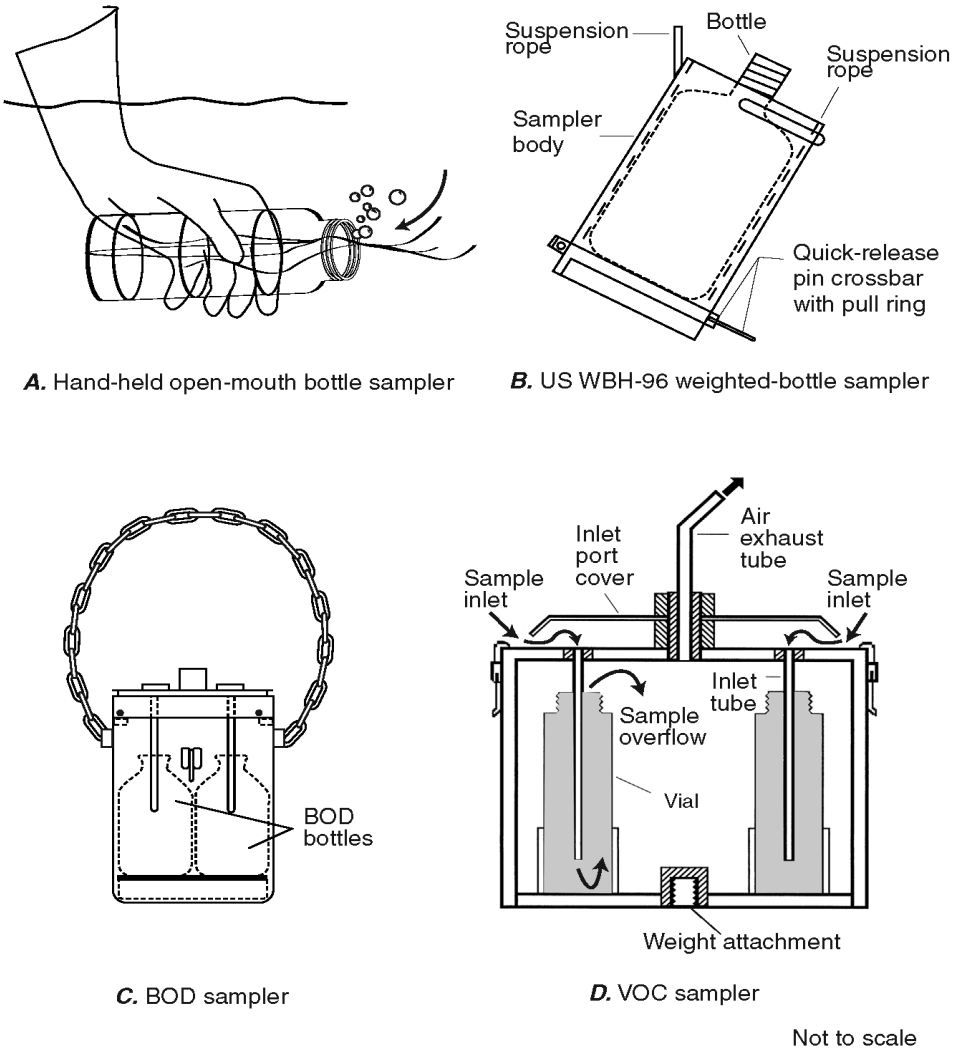

Figure 1 Examples of Open Mouth Samplers
(Source: USGS, 1997-1999)

Hand Pumps

Hand pumps may operate by peristaltic, bellows, diaphragm, or siphon action. Hand pumps that operate by bellow, diaphragm, or siphon action should not be used to collect samples that will be

analyzed for volatile organics because the slight vacuum applied may cause loss of these contaminants. To avoid contamination of the pump, a liquid trap consisting of a vacuum flask or other vessel to collect the sample should be inserted between the sample inlet hose and the pump. Tubing used for the inlet hose should be nonreactive (preferably Teflon®). The tubing and liquid trap must be thoroughly decontaminated between uses (or disposed of after one use). When sampling, the tubing is weighted and lowered to the desired depth. The sample is then obtained by operation of the pump, and subsequently transferred from the trap to the sample container.

Thief Samplers

Thief samplers are used to collect "point" samples from a specific depth. Examples of thief samplers include Kemmerer and Van Dorn samplers, and double check-valve bailers (Figure 2). The Kemmerer sampler is a brass cylinder with rubber stoppers that leave the ends open while being lowered in a vertical position to allow free passage of water through the cylinder. The Van Dorn sampler is plastic and is lowered in a horizontal position. In both the Kemmerer and Van Dorn samplers, a "messenger" is sent down the line when the sampler is at the designated depth, to cause the stoppers to close the cylinder, which is then raised. A double check-valve bailer is similar to a Kemmerer sampler in that it allows free passage of water through the cylinder until the desired sampling depth is reached. However, the check valves automatically close when the bailer is retrieved. Water is removed through a valve to fill sample bottles.

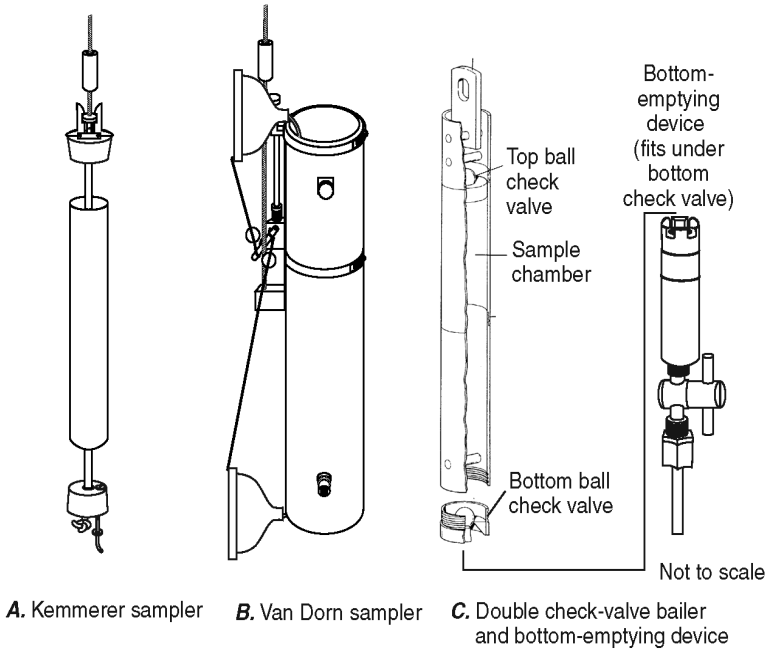

Figure 2 Examples of Thief Samplers
(Source: USGS, 1997-1999)

Depth-Integrated Sampling

Depth integration is used to collect a water and suspended material sample, in direct proportion to relative velocity at each increment of depth. This means that the volume of water and suspended material must enter the sample bottle at a rate proportional to the velocity of the flow passing the intake of the sampler. If a depth-integrating sampler is lowered from the surface to the bed and back at the same rate, and presuming that the sampler is not overfilled during the course of the sampling operation, each increment of flow in that vertical is sampled proportionately to the velocity. The minimum stream velocity must be greater than 1.5 feet per second (ft/s) for a depth-integrated sampler with a rigid bottle, or greater than 3.0 ft/s for a depth-integrated sampler with a bag (USGS, 1998).

One method of collecting depth-integrated samples is the EWI technique. Samples are taken at several equally spaced verticals across the stream, with the transit rate of the sampler (that is, the velocity at which the sampler is passed through the water column) the same in all verticals. The samples collected in each vertical are then composited into a single sample representative of the entire flow in the cross section. Because the volume collected in each vertical sample will be directly in proportion to depth and velocity at the vertical location, the composite sample of the water-sediment mixture flowing in the cross section will be discharge-weighted.

In the EDI technique, the positions of sampling verticals across the stream are based on incremental discharges rather than width (i.e., deeper or higher velocity areas of the stream cross section are sampled at a closer spacing). This method provides the most accurate measure of total discharge of the contaminant for streams that are not well mixed; however, it requires knowledge of the cross-sectional stream flow distribution.

The EDI method has these advantages: variable transit rates may be used because samples can be composited in proportion to known stream flow distribution, fewer verticals need to be sampled, and cross-section discharge information is obtained. The primary disadvantage of the method is that the streamflow distribution in the cross section must be known or measured each time before sampling.

The EWI method has these advantages: discharge measurements are not needed, the technique is learned easily, and the technique is applicable where cross-sectional stream flow distribution varies because of shifting beds or other causes. The main disadvantages are that the procedure is time consuming for large streams and does not provide quantitative information on cross-sectional discharge because this parameter does not need to be measured for the EWI method.

Furthermore, the EWI method requires sampling at equally spaced verticals and use of identical transit rates within each vertical.

Because these multi-point sampling techniques can become very time consuming and expensive, an alternate method often used involves sampling at the quarter points or other equal intervals across the width of the stream. Composites of individual samples collected at the quarter points can be fairly representative, providing the stream cross section is properly located.

Several depth-integrating samplers specifically designed and suitable for collecting representative samples are available and include the US DH-81, US DH-95, US DH-77 samplers (Figure 3). US DH-81 or US DH-95 samplers can be used where flowing water can be waded or where a bridge is accessible. The US DH-77 (or the D-77 Bag, or Frame-Bag sampler) is a cable-and-reel sampler for use when flowing water cannot be waded.

Because of the number and diversity of analyses that may be performed on collected surface water or water-sediment mixtures, a sample splitter will often be required. A churn splitter is a practical means for splitting composited samples into representative subsamples.

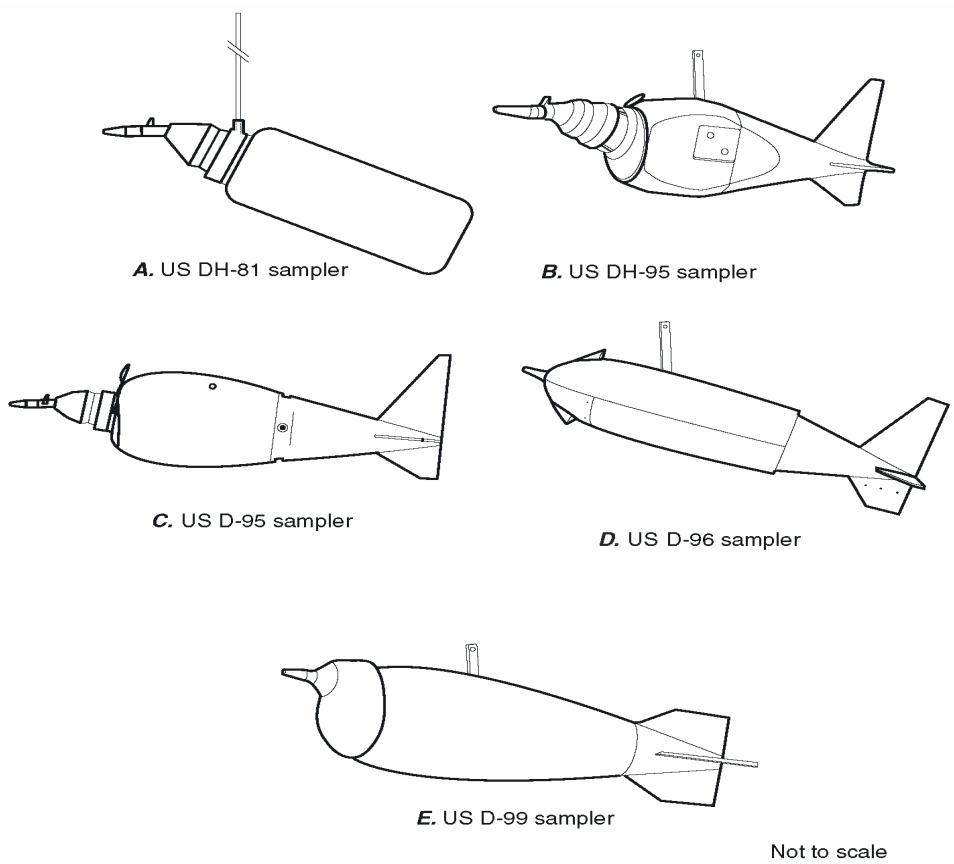

Figure 3 Depth-Integrating Samplers
(Source: USGS, 1997-1999)

4.4 Sediment Sampling

4.4.1 General

Sediment samples are usually collected at the same locations where surface water samples were collected. If only one sediment sample is to be collected, the site should be approximately at the center of the water body. This is particularly true for reservoirs that are formed by the impoundment of rivers or streams. Generally, the coarser grained sediments are deposited near the headwaters of the reservoir. Bed sediments near the center will be composed of fine-grained materials that may contain greater concentrations of contaminants because of their lower porosity and greater surface area available for adsorption. The shape, flow pattern, bathymetry (depth distribution), and water circulation patterns must all be considered when selecting sediment sampling sites. In streams, areas likely to have sediment accumulation (bends; behind islands or boulders; quiet, shallow areas; or very deep, low-velocity areas) should be sampled while areas likely to show net erosion (high velocity, turbulent areas) and suspension of fine solid materials should be avoided.

Chemical constituents associated with bottom material may reflect an integration of chemical and biological processes. Bottom-material samples reflect the historical input to streams, lakes, and estuaries with respect to time, application of chemicals, and land use. Bottom sediments (especially fine-grained materials) may act as a sink or reservoir for adsorbed heavy metals and organic contaminants (even if water-column concentrations are below detection limits). Therefore, it is important to minimize the loss of low-density "fines" during any sampling process.

4.4.2 Sampling Equipment and Techniques

A sediment sample may consist of a single scoop or core or may be a composite of several individual samples in the cross section. Sediment samples may be obtained using onshore or offshore techniques.

When boats are used for sampling, life preservers must be provided and two individuals must undertake the sampling. An additional person should remain on shore in visual contact at all times. Please refer to the site-specific health and safety plan for details regarding sampling from a boat.

The following samplers may be used to collect bottom materials:

- Scoop sampler
- Core samplers
- Hand-operated gravity corers
- Dredge samplers

Scoop Sampler

A scoop sampler consists of a pole to which a jar or scoop is attached. The pole may be made of bamboo, wood, or aluminum and be either telescoping or of fixed length. The scoop or jar at the end of the pole is usually attached using a clamp.

If the water body can be sampled from the shore or if it can be waded, the easiest way to collect a sediment sample is to use a scoop sampler. This reduces the potential for cross-contamination because the scoop can be discarded or easily decontaminated between samples. This method is accomplished by reaching over or wading into the water body and, while facing upstream (into the current), scooping the sample along the bottom in the upstream direction. The sediment is then transferred from the scoop to the appropriate sample container. Please note that it is very difficult not to disturb fine-grained materials of the sediment-water interface when using a scoop sampler.

Core Samplers

Core samplers are used to sample vertical columns of sediment. They are useful when a historical record of sediment deposition is desired because they preserve the sequential layering of the deposit. Coring devices are particularly useful for sediments because they disturb fine-grained materials of the sediment-water interface less than other sampling methods. Also, the sample is withdrawn intact, permitting the removal of only those layers of interest and glass or Teflon® core liners can be used in order to prevent possible sample contamination. In addition, samples are easily labeled and submitted to the lab for analysis in the tube in which they are collected. The disadvantage of coring devices is that a relatively small surface area and sample size is obtained, necessitating repetitive sampling to obtain enough sample for some analyses.

Many types of coring devices have been developed to address varying water depths, the nature of the bottom material, and the length of the core to be collected. In shallow wadeable waters, the direct use of a glass or Teflon® core liner or tube is recommended. Teflon® is preferred to avoid

glass breakage and possible sample loss. The use of the tube by itself eliminates the need to decontaminate core barrels, cutting heads, and retainers between samples.

Core sampler tubes or liners should be approximately 12 inches long when only recently deposited sediments (8 inches or less) are to be sampled. Soft or semiconsolidated sediments such as mud and clays have a greater adherence to the inside of the tube and thus can be sampled with large-diameter tubes. However, because coarse or unconsolidated sediments such as sand and gravel will tend to fall out of the tube, a smaller diameter is required. A tube about 2 inches in diameter is usually sufficient. The wall thickness of the tube should be about 1/3 inch for either Teflon® or glass. The end of the tube may be tapered by filing it down to facilitate entry of the liner into the substrate.

Hand-Operated Gravity Corers

Hand corers are generally constructed of an outer rigid metal tube into which a plastic, brass, or Teflon® core sleeve fits with minimal clearance. The cutting edge of the corer has a recessed lip on which the core sleeve rests and which accommodates a plastic core catcher. The core catcher is composed of intermeshing "fingers" that point upward into the core sleeve so that when the sampler is pressed into the sediment, the core is free to move past the catcher, but the core cannot fall through the catcher upon removal of the sampler from the sediment.

Use of hand corers or liners involves pushing the device into the substrate until only 4 inches or less is above the sediment-water interface. When sampling hard or coarse substrates, a gentle rotation of the corer while it is pushed will facilitate greater penetration and will reduce sample compaction. After the corer is slowly extracted, the liner is removed and capped with a sheet of Teflon held in place by a plastic cap. If the top or bottom of the liner contains water or air, the water should be carefully decanted (to avoid removal of surface sediments) and the ends packed with clean silica sand. The caps are then placed and secured with friction tape, which is in contact with only the plastic cap and the outside of the liner. The orientation of the core should be marked on the sleeve and maintained during transport to the laboratory.

Gravity corers are used to obtain sediment samples in water bodies deeper than 3 to 5 feet. These samplers can be used for collecting 1 to 2 foot cores of fine-grained sediments from depths of up to several hundred feet beneath the water surface.

The gravity core sampler operates in a manner similar to the hand-operated core. A plastic, brass, or Teflon® liner fits within a metal core housing fitted with a cutting edge. Core-catchers are used to retain the core within the liner. An opening exists above the liner to allow free flow of

water through the corer as it moves vertically through the water and into the sediment. The sampler has a messenger-activated valve assembly that seals the opening above the liner following sediment penetration, which creates a partial vacuum to assist in sample retention during retrieval.

Samples are obtained by allowing the sampler, which is attached to sufficient length of stainless steel cable, to drop to the bottom. The weight of the sampler drives the core into the sediment to varying depths depending on the characteristics of the sediments. The messenger is then dropped and the sampler carefully retrieved. Upon retrieval, treatment is similar to that described above for hand corers.

Dredges

Dredges are generally used to sample sediments that cannot easily be obtained using coring devices (i.e., coarse-grained or semi-consolidated materials) or when large quantities of materials are required. Dredges generally consist of a clam shell arrangement of two buckets. The buckets either may close upon impact or be activated by use of a messenger. Some dredges are heavy (up to several hundred pounds) and require use of a winch and crane assembly for sample retrieval. There are three major types of dredges: Peterson, Eckman, and Ponar.

The Peterson dredge is used when the bottom is rocky, in very deep water, or when the flow velocity is high. The dredge should be lowered very slowly as it approaches bottom, because it can force out and miss lighter materials if allowed to drop freely.

The Eckman dredge performs well in sediments that are unusually soft (organic sludge or light mud). It is unsuitable, however, for sandy, rocky, and hard bottoms and is too light for use in streams with high flow velocities.

The Ponar dredge is a Peterson dredge modified by the addition of side plates and a screen on the top of the sample compartment. The screen over the sample compartment permits water to pass through the sampler as it descends, thus reducing the “shock wave” and permitting direct access to the secured sample without opening the closed jaws. Access to the secured sample through the covering screens permits subsampling of the secured material with coring tubes or scoops. Like Peterson dredge, the Ponar dredge is easily operated by one person, and is one of the most effective samplers for general use on all types of substrates.

5.0 REFERENCES

U.S. Geological Survey, 1997-1999. National Field Manual for the Collection of Water-Quality Data. U.S. Geological Survey Techniques of Water-Resources Investigations, Book 9, chaps. A1-A9, 2 v., variously paged. (Chapters were published from 1997-1999; updates and revisions are ongoing and can be viewed at http://water.usgs.gov/owq/FieldManual/mastererrata.html).

BASIC REMEDIATION COMPANY
STANDARD OPERATING PROCEDURES
BMI COMMON AREAS
CLARK COUNTY, NEVADA

SOP-10

SURVEYING

STANDARD OPERATING PROCEDURES

SOP-10
SURVEYING

TABLE OF CONTENTS

Section **Page**

1.0 INTRODUCTION 1

2.0 DEFINITIONS 1

3.0 RESPONSIBILITIES 2

4.0 PERFORMING SURVEYS 3
- 4.1 Establishing Control 3
- 4.2 Control Survey 4
- 4.3 Boundary Survey 4
- 4.4 Topographic Survey 4
- 4.5 Aerial Survey 5
- 4.6 As-Built Survey 6
- 4.7 Global Positioning System Surveying 6
- 4.8 Required Accuracy And Precision 7
  - 4.8.1 Environmental Investigations 7
    - 4.8.1.1 Soil Borings, Cone Penetrometer Test Sites, HydroPunch®, and Test Pit 8
    - 4.8.1.2 Monitoring Wells, Pumping Wells, and Piezometers 8
    - 4.8.1.3 Surface Water Sampling Locations 9
    - 4.8.1.4 Surface Soil Sampling Locations 9
    - 4.8.1.5 Air Sampling Stations 9
    - 4.8.1.6 Other Sampling Locations 9
  - 4.8.2 Boundary Surveys 10
  - 4.8.3 Topographic Surveys 10
  - 4.8.4 Aerial Surveys 10
  - 4.8.5 As-Built Surveys 10

DISCLAIMER

THE FOLLOWING STANDARD OPERATING PROCEDURE PROVIDES GENERAL GUIDANCE FOR BRC CONTRACTORS FOR TECHNICAL ISSUES ADDRESSED DURING ENVIRONMENTAL SITE INVESTIGATION AND REMEDIATION ACTIVITIES. IT IS NOTED, HOWEVER, THAT EACH SITE IS UNIQUE AND THESE GUIDELINES ARE NOT A SUBSTITUTE FOR COMMON SENSE AND GOOD MANAGEMENT PRACTICES BASED ON PROFESSIONAL TRAINING AND EXPERIENCE. IN ADDITION, INDIVIDUAL CONTRACT TERMS MAY AFFECT THE IMPLEMENTATION OF THIS STANDARD OPERATING PROCEDURE. BRC CONTRACTORS RESERVE THE UNRESTRICTED RIGHT TO CHANGE, MODIFY OR NOT APPLY THESE GUIDELINES IN THEIR SOLE, COMPLETE, AND UNRESTRICTED DISCRETION TO MEET CERTAIN CIRCUMSTANCES, CONTRACTUAL REQUIREMENTS, SITE CONDITIONS, OR JOB REQUIREMENTS.

1.0 INTRODUCTION

Surveying is the science and art of making the measurements necessary to determine the relative positions of points above, on, or beneath the surface of the earth or to establish such points. This Standard Operating Procedure (SOP) provides a description of the general types of surveys and requirements for performing the various surveys. This document describes the applicability and operation of control, land, topographic, and aerial surveys along with precision and accuracy required for each, as well as Global Positioning System (GPS) survey techniques. This SOP is intended for the project leader to help develop work plans and manage resources.

2.0 DEFINITIONS

Accuracy

Accuracy refers to the closeness between measurements and expectations or true values. The farther a measurement is from its expected value, the less accurate it is. Observations may be accurate but not precise if they are well distributed about the expected value but are significantly disbursed from one another.

Accuracy is often referred to in terms of its order (i.e., first, second, or third order accuracy). The order of accuracy refers to the error of closure allowed; guidelines for each order of accuracy are as follows:

Order of Accuracy	Maximum Error
1st	1/25,000
2nd	1/10,000
3rd	1/5,000
4th	1/3,000

Benchmarks

Benchmarks are monuments placed by surveyors to serve as permanent reference points. They are elevation markers, and their location and elevation are definitely established and recorded on surveyors' level notes. They are set upon some permanent object to ensure they remain undisturbed.

Differential GPS (DGPS)

Differential GPS overcomes signal degradation from overhead satellites. With DGPS, a GPS receiver is placed at a known location. The position information from the receiver is used to correct the position data transmitted by the satellites. The corrected information is then transmitted to other GPS receivers in the area.

Global Positioning System

This system utilizes a network of overhead satellites orbiting the earth to locate objects and/or targets on the surface of the earth. Data from a minimum of three satellites is required to plot (by triangulation) the location of a certain point. Accuracy is

	dependent on the duration of data collection and the type of receiver/antenna used.
Monuments	Classified as natural, artificial, record, or legal. Examples of natural are trees, large stones, or other substantial, naturally occurring objects in place before the survey was made. Artificial monuments can consist of iron pipe or bar driven into the ground, concrete or stone monument with a drill hole, cross, or metal plug marking an exact location (such as a corner). The standard for monumenting public-land surveys, as adopted by the Bureau of Land Management, is a post made of iron pipe filled with concrete, the lower end of the pipe split and spread to form a base and the upper end fitted with a brass cap with identifying marks. A record monuments exists because of a reference in a deed or description (i.e., the side line of street). A legal monument is one that is controlling in the description (i.e., "to a concrete post").
Precision	Precision pertains to the closeness to one another of a set of repeated observations of a random variable. It is a measure of the reproducibility of a result or measured value. Thus, if such observations are closely clustered together, then the observations are said to have been obtained with high precision. Observations may be precise but not accurate if they are closely grouped about a value that is different from the expected or true value.
Station	A station is a 100-foot section of a measurement from a reference point such as a benchmark. For example, a stake placed 1,500 feet from a reference point is at station 15 and is labeled "15+00," and a stake placed 1,325 from a reference point is labeled "13+25."

3.0 RESPONSIBILITIES

This section presents a brief definition of field roles and the responsibilities generally associated with them. This list is not intended to be comprehensive and additional personnel may be involved in other aspects of the project. Project team member information shall be included in project-specific plans (e.g., work plan, field sampling plan, quality assurance plan), and field personnel shall always consult the appropriate documents to determine project-specific roles and responsibilities. In addition, one person may serve in more than one role on any given project.

The **Project Manager** or **Task Leader** (a qualified Nevada Certified Environmental Manager [C.E.M.]) has overall responsibility for establishing the specific technical requirements and coordinating the survey services. The project manager shall rely on input from other key project staff who may have more detailed knowledge of these technical requirements and would be on-

site to oversee the survey. To facilitate the management and administration of surveying services procured for a particular site, the project manager may delegate the Field Team Leader (FTL) as the focal point for all matters involving surveying services.

The **Quality Control Manager** performs project audits and ensures that project-specific data quality objectives are fulfilled.

The **FTL and/or Field Geologist, Hydrogeologist, or Engineer** (a qualified Nevada C.E.M.) is responsible for implementation of the actual field activities performed on site by the Surveying Contractor. In addition, the FTL shall be responsible for scheduling and coordinating field activities, overseeing survey activities and preparing daily logs of field activities.

The **Surveyor (Surveying Contractor)** is responsible for assuring that all surveying field operations, office calculations, map preparation, and related surveying activities conform to established guidelines and the specific requirements of the surveying subcontract (including health and safety requirements). All surveying operations shall be performed by or under the direction of a Licensed (or Registered) Land Surveyor (licensed in that particular state), who shall sign and seal all final drawings, maps, and reports submitted for the assignment.

4.0 PERFORMING SURVEYS

Surveys are used to measure horizontal and vertical distances between objects, to measure angles between lines, to determine the direction of lines, and to establish points by predetermined angular and linear measurements. The following sections describe various types of surveys that are typically used for environmental investigations and the precision and accuracy required for each, what information may be required to perform the survey, and when each survey may be appropriate. Emphasis is placed on the application of surveying techniques to environmental investigations. All topographical surveys shall be performed by a Licensed Surveyor.

4.1 Establishing Control

Prior to initiating any type of survey, control points (monuments, baselines, etc.) are established. The type of control needed depends on the order (first, second, or third) of accuracy required. Established control points are based on the North American Datum (NAD), 1927 and 1983, which publishes specifications for first-, second-, and third-order horizontal and vertical control surveys. These specifications provide a starting point for establishing standards on most projects that required basic control surveys. The surveying contractor must be familiar with established

control points near the site to be surveyed. From these control points, the surveyor measures angles and distances to the site to be surveyed to establish local control at the site.

Based on project requirements, monuments that can be used in future site-surveys as a control point may be set. Care is taken when establishing new control points and elevations from other agencies' vertical control points to ensure that all the old control bench marks are on the same datum or reference plane. The monument is stamped with the state planar coordinates and the elevation (feet above mean sea level) so that it shall serve as a reference point for additional surveys. This can save time in future survey work, as the surveying contractor will not have to survey new locations from distant established control points.

For boundary surveys, the Bureau of Land Management keeps a file on property survey data related to public lands. State, county, city and town engineering and surveyors offices should be consulted for useful survey data on private property. Surveyors typically use this information to locate property boundaries based on existing markers, monuments, angles, and distances.

4.2 Control Survey

This is the most common type of survey performed in an environmental investigation. It is used to establish the horizontal and vertical positions of points such as soil borings or monitoring wells. Control is typically established horizontally using a theodolite and electronic distance measurement instrument, or using a transit and stadia as part of a three-dimensional traverse. The traverse is used to measure the distance and direction from a known point and the elevation with reference to a known monument. Horizontal and vertical data are then plotted and elevation data interpolated. This type of survey is best suited for small areas and for locating particular points.

4.3 Boundary Survey

A boundary, land, or property survey, is performed to determine the length and direction of land lines and to establish the position of these lines on the ground. The area of the tract bounded by the lines can also be determined. This type of survey is made using established control monuments and establishing angles and distances from those monuments, based on a legal description of the property.

4.4 Topographic Survey

A topographic survey is made to obtain data from which a map indicating the configuration of the terrain and location of natural and man-made objects can be prepared. This type of survey

can be performed either using established control monuments or by aerial photography using a digital terrain model or digital elevation model. Contour intervals are determined before measurement and specified so that enough detail of the site topography is provided to meet the project data quality objectives. The scale to which the map is drawn shall determine the field surveying methods employed. The topographic survey is used to identify high and low spots at a site, as well as natural drainage patterns. Topographic surveys can be performed on a site of any size, but contour intervals normally dictate the time and cost of the survey.

4.5 Aerial Survey

An aerial survey is performed by a high-precision camera mounted in an aircraft. Photographs are taken in an organized manner as the aircraft flies over the terrain. Aerial surveys are commonly used for larger sites where boundaries and topography are to be defined. Ground surveys are also required in conjunction with aerial surveys to establish control points for the aerial survey.

The main advantages of aerial surveys over ground methods include the following:

- Speed of compilation
- Reduction in the amount of control surveying required to control the mapping
- High accuracy of the locations of planimetric features
- Faithful reproduction of the configuration of the ground surface by continuously-traced contour lines
- Unrestricted by inaccessible terrain
- Capability to be designed for a map scale ranging from 1 inch = 20 feet to 1 inch = 20,000 feet with as small as 0.5-foot contour intervals

The disadvantages associated with aerial surveys include the following:

- Difficulties in plotting areas with heavy ground cover (high grass, timber, and underbrush)
- High cost per acre of mapping areas smaller than 5 acres
- Difficulties in locating positions of contour lines in flat terrain
- Editing requirements to include road classifications, boundary lines, drainage classification, and names of places, roads, and other map features

4.6 As-Built Survey

An as-built survey is a post-construction survey that shows the exact final location and layout of civil engineering works. This type of survey provides position verification and records that include design changes.

4.7 Global Positioning System Surveying

GPS is a ranging system from known positions of satellites in space to unknown positions on land, sea, in air and space. A GPS receiver uses information from at least 4 to 24 satellites to precisely triangulate its position on the earth. GPS uses pseudoranges derived from the broadcast of a satellite signal. The pseudorange is derived either from measuring the travel time of the (coded) signal and multiplying it by its velocity or by measuring the phase of the signal. The pseudorange takes into account synchronization error (denoted as clock error), since the clocks are never perfectly synchronized. In both cases, the clocks of the receiver and the satellite are employed. The GPS concept assumes that, when fully deployed, four or more satellites will be in view at any location on earth 24 hours a day.

Sources of positional error include variations in the speed of radio transmission owing to the Earth's constantly changing ionosphere and atmosphere, electrical interference within a receiver, drift in the atomic clocks, and multipath error where the radio signal does not travel directly to the receiver but is refracted en route. The sum of these uncorrected errors will give the total positional data, typically ±35 feet. Vertical accuracy is typically ±50 feet.

The total uncorrected error will be multiplied by the positional dilution of precision (PDOP). PDOP values can be obtained from a good quality GPS unit and are a measurement of accuracy. PDOP is determined by the strength of the satellite configuration based on the geometry between the user and a set of satellites. The ideal satellite configuration would have three equally spaced satellites that are low on the horizon and one satellite that is directly above the receiver. PDOP values of 4 or less indicate good accuracy, a value of 5 to 6 indicates an acceptable accuracy, and a value of 7 or greater indicates a poor GPS coordinate reading. The PDOP ideally should be between 1 and 4 and not exceed 6.

Accuracy can be improved by correcting the positional data from the satellites by using DGPS. Horizontal accuracy in the sub-3-foot range can be obtained by using DGPS and post-processing calculations. Positional data can also be greatly increased by averaging the data points collected over time. The more points that are collected, the greater the accuracy. It is impossible to predict

the nature of GPS signal errors and the exact amount of time needed to collect points. Typically, GPS points are averaged over a period of at least 2 minutes and less than 20 minutes.

The operation of GPS units from different manufacturers varies. An instruction manual shall be obtained for the specific GPS unit to be used in the field, and survey crews shall be educated in its use.

Limitations of GPS Survey

- Elevations cannot be determined accurately. In some cases, accuracy may be to the nearest 10 feet or more. Most environmental applications require elevation accuracy to the nearest 0.01 feet, e.g., top of casing elevation for monitoring wells.
- Tall structures (e.g., buildings, towers) may obstruct signal reception.
- There are times when less than four satellites are in view. At such times the unit ceases data collection and switches to a power saving mode until four or more satellites are in view.
- The data logger has limited memory and may need to be downloaded frequently, depending on extent of use.
- GPS data is subject to selective availability imposed by the United States military. Surveyed data must be corrected and processed to remove accuracy restrictions imposed by selective availability.

4.8 Required Accuracy And Precision

The required survey accuracy and precision depends on the intended purpose of the survey work. Such requirements could range from gross estimation of a sampling station for inclusion on a small-scale vicinity map to the determination of top of casing elevations to ±0.01 feet to establish groundwater gradients. In general, no more than third order accuracy is required for sampling station location and elevation measurements performed in environmental investigations. However, higher accuracies may be required for boundary surveys, topographic surveys, etc. The following sections discuss accuracy and precision requirements for specific survey types.

4.8.1 Environmental Investigations

For environmental investigations, surveying activities generally consist of obtaining horizontal and vertical coordinates of sampling locations designed to assess the migration and extent of contaminants in the soil and/or groundwater. These locations include groundwater monitoring wells, soil borings, and piezometers. The following sections describe precision and accuracy

requirements for various field investigation activities. The following table identifies the vertical and horizontal controls required for the various types of environmental investigation sites.

Type of Site	Vertical Control (ft)	Horizontal Control (ft)
Soil Boring/Test Pit	0.1	1
Surface Soil/Sediment Sample Location	0.1	1
Surface Water Sample Location	0.1	1
Monitoring Wells/Piezometers	0.01	1
CPT/HydroPunch Locations	0.1	1
Air Sampling Stations	0.1	1
Biological Stations	0.1	1

4.8.1.1 Soil Borings, Cone Penetrometer Test Sites, HydroPunch®, and Test Pit

Surveyed horizontal locations and ground surface elevations for soil borings, cone penetrometer test (CPT), HydroPunch® sites, and test pits are used to graphically plot locations on site maps and are often included in boring logs and test pit logs. The surveyed locations are also used to construct geologic sections or profiles. Horizontal locations shall be staked out to ±1.0 foot, and ground surface elevations measured to ±0.1 feet.

Locations of these sites are typically surveyed after completion. Care is taken to measure the original surface elevation as accurately as possible. The location or outline of the sites must be adequately staked to permit the required surveying. In paved areas, spray paint is used to mark the location and other information directly on the pavement.

4.8.1.2 Monitoring Wells, Pumping Wells, and Piezometers

Horizontal location ground surface and top of casing elevation survey criteria for wells and piezometers are generally similar to those for test pits or borings. However, vertical precision in the elevation measurements is essential due to the groundwater elevation measurements that will be collected after the well installation.

All survey data, including horizontal location, ground surface elevation, and the elevation of the top of the inner casing, shall be surveyed after well installation. The accuracy of the horizontal plane survey is ±1 foot (unless greater accuracy is desired) and is measured to a reference point on the well casing. The vertical plane survey measurements at the ground surface and on the north side of the top of the inner casing are accurate to ±0.01 feet. The point at which the

elevation is measured on the inner casing must be scribed so that water level measurements can be made from the same location. The FTL (or other designated personnel) is responsible for ensuring that the inner casing is scribed appropriately and for directing the surveying contractor to collect vertical measurements from the correct location. This procedure is to be used for both aboveground and flush-mounted monitoring well completions.

4.8.1.3 Surface Water Sampling Locations

When grab samples are obtained from the edges of surface water bodies, the sampler can often estimate and mark the approximate location and elevation directly on a site topographic map. Typically, such sampling locations do not require high location accuracy (within several feet), since they are usually only indicated graphically on a site map. However, depending on the accuracy required for the project, a location stake at the shoreline may be installed to mark the sampling location with the station number, coordinates, and water surface elevation.

Better horizontal control is usually required when samples are to be taken within the surface water body away from the shoreline. The sampler determines sampling locations using on-shore baselines or ranges. In tidal waterbodies, the use of a tide staff (existing or installed previously by the surveyors) may be required by the client. During sampling, tidal elevations should be read to 0.1 feet on the tide staff at a sufficient frequency to observe significant tide changes.

4.8.1.4 Surface Soil Sampling Locations

The measurement and layout requirements for obtaining a single grab sample of surface soil are comparable to those for soil borings. Where a composited sample is to be collected from a sampling grid, the surveyors stake out the grid and indicate the station number(s), coordinates or orientation of the grid, and ground elevation(s) on the stakes. Generally, a precision of ±1.0 foot for location and ±0.1 feet for elevation will suffice for grab or grid surface sampling.

4.8.1.5 Air Sampling Stations

Air sampling stations generally need no more layout precision than for a soil boring. Therefore, horizontal and vertical plane survey accuracy are within ±1.0 and ±0.1 feet, respectively.

4.8.1.6 Other Sampling Locations

Other sampling points are located using methods similar to those described above. For example, biological sampling stations are established with the same surveying methods and precision as for surface water sampling. For unusual or unique sampling methods, appropriate surveying

requirements are developed in consideration of the specific intentions and site conditions. For sampling man-made facilities such as drums, tanks, and pipelines, the sampler identifies these locations directly on a topographic map or as built drawing of these facilities at the time of sampling.

4.8.2 Boundary Surveys

Accuracies for boundary maps are usually determined by State or Municipal law. Generally, second order accuracy is required for the survey so that property boundaries can be established to a precision of one second in their bearing and 0.01 feet in their length. In addition to being graphically plotted to scale on the boundary map, the results of the boundary survey is numerically recorded on the map as the actual bearing and length of each site border.

4.8.3 Topographic Surveys

The results of topographic surveys are usually only represented graphically on maps or design drawings. Thus, the required accuracy and precision of the field survey is dependent upon the required accuracy and precision for the map as determined by the map scale. For a scale of 1 inch = 100 feet, horizontal distances are plotted to the nearest 1 or 2 feet. If the scale is 1 inch = 1,000 feet, the plotting is to the nearest 10 or 20 feet. The accuracy of horizontal measurements in the field is specified in the project-specific work plans. Vertical field survey measurements are depicted on maps graphically as contour lines and numerically as spot elevations. Such vertical field measurements are to a precision of ±0.01 feet. Commonly, maps showing contour intervals of 1 foot or more indicate spot elevations between or beyond contour lines to the nearest tenth of a foot.

4.8.4 Aerial Surveys

Aerial photography standards for preparation of topographic maps are dependent upon the specific equipment and techniques used in obtaining the photographs and preparing the maps. These standards are project-specific and are defined in the project-specific work plan.

4.8.5 As-Built Surveys

As-built surveys hall show locations of all buildings, utilities, curbs, roads, walks, and other structures. Locations are referenced to base lines or to at least two other fixed points.

BASIC REMEDIATION COMPANY
STANDARD OPERATING PROCEDURES
BMI COMMON AREAS
CLARK COUNTY, NEVADA

SOP-11

CONE PENETROMETER TESTING

STANDARD OPERATING PROCEDURE

SOP-11
CONE PENETROMETER TESTING

TABLE OF CONTENTS

Section **Page**

1.0 INTRODUCTION 1

2.0 DEFINITIONS 1

3.0 RESPONSIBILITIES 2

4.0 CONE PENETROMETER TESTING 3
- 4.1 Cone Resistance and Friction Sleeve Data 4
- 4.2 Pore Pressure Data 4
- 4.3 Sources of Interpretation Error 5
- 4.4 Applications 9
  - 4.4.1 Permits/Clearances 10
  - 4.4.2 General Procedures 10
  - 4.4.3 Penetration Abandonment 11

5.0 REFERENCES 11

LIST OF FIGURES

Figure 1 Terminology Regarding the Cone Penetrometer 3
Figure 2 Field Plot of Tip Resistance and Local Friction 5
Figure 3 Proposed Soil Behavior Type Classification System from CPT Data 6
Figure 4 Field Plot of Pore Pressure 7

LIST OF ATTACHMENTS

Attachment 1 ASTM Designation: D3441-86
Attachment 2 New Cone Designs

DISCLAIMER

THE FOLLOWING STANDARD OPERATING PROCEDURE PROVIDES GENERAL GUIDANCE FOR BRC CONTRACTORS FOR TECHNICAL ISSUES ADDRESSED DURING ENVIRONMENTAL SITE INVESTIGATION AND REMEDIATION ACTIVITIES. IT IS NOTED, HOWEVER, THAT EACH SITE IS UNIQUE AND THESE GUIDELINES ARE NOT A SUBSTITUTE FOR COMMON SENSE AND GOOD MANAGEMENT PRACTICES BASED ON PROFESSIONAL TRAINING AND EXPERIENCE. IN ADDITION, INDIVIDUAL CONTRACT TERMS MAY AFFECT THE IMPLEMENTATION OF THIS STANDARD OPERATING PROCEDURE. BRC CONTRACTORS RESERVE THE UNRESTRICTED RIGHT TO CHANGE, MODIFY OR NOT APPLY THESE GUIDELINES IN THEIR SOLE, COMPLETE, AND UNRESTRICTED DISCRETION TO MEET CERTAIN CIRCUMSTANCES, CONTRACTUAL REQUIREMENTS, SITE CONDITIONS, OR JOB REQUIREMENTS.

1.0 INTRODUCTION

Cone Penetrometer Testing (CPT) is a method for obtaining soil data without collecting soil samples. Engineering and scientific applications include geotechnical design and hydrogeologic characterization. The use of CPT methods for the determination of subsurface lithologies and stratigraphy is described in American Society for Testing and Materials (ASTM) Method D-3441-98, which is included as Attachment 1 to this Standard Operating Procedure (SOP).

Two general types of cones, mechanical and electric, are described in the literature. Electric cones have replaced mechanical cones for most applications, and this SOP describes electric cones only.

The purpose of this SOP is to aid in the selection of cones appropriate for site conditions, aid in the collection and interpretation of CPT data, and describe limitations of the method and sources of error.

2.0 DEFINITIONS

Cone	The cone-shaped point of the penetrometer tip, upon which the end-bearing resistance develops.
Cone Penetrometer	An instrument in the form of a cylindrical rod with a conical point designed for penetrating soil and soft rock and for measuring the end-bearing component of penetration (Figure 1)
Cone Resistance, end-bearing resistance, or tip resistance, *qc*	The resistance to penetration developed by the cone, equal to the vertical force applied to the cone divided by its horizontally projected area.
Electric Penetrometer	A penetrometer that uses electric-force transducers built into a non-telescoping penetrometer tip for measuring, within the tip, the component(s) of penetration resistance.
Friction-Cone Penetrometer	A cone penetrometer with the additional capability of measuring the local side friction component of penetration resistance.
Friction Ratio, R*f*	The ratio of friction resistance to cone resistance, *fs/qc*.

Friction Resistance, *fs*	The resistance to penetration developed by the friction sleeve, equal to the vertical force applied to the sleeve divided by its surface area. This resistance consists of the sum of friction and adhesion.
Friction Sleeve	A section of the penetrometer tip upon which the local side-friction resistance develops (Figure 1).
Penetrometer Tip	The end section of the penetrometer, which comprises the active elements that sense the soil resistance, the cone, the friction sleeve and the piezo-element.
Piezocone Penetrometer or Piezocone	An electric penetrometer tip equipped with a ceramic filter, which permits the measurement of pore water pressure (μ) during and after stopping tip penetration (Figure 1).
Pore Pressure Ratio or Differential Pore Pressure	Pore water pressure (μ) divided by the tip resistance.
Push Rods	The thick-walled tubes, or other suitable rods, used for advancing the penetrometer tip to the required test depth.
Thrust Machine	A machine that provides a continuous stroke, preferably over a distance greater than one push rod length. This machine must advance the penetrometer tip at a constant rate while the magnitude of the thrust required fluctuates. Thrust machines are usually one component of the CPT rig, which is available in different sizes for various applications.

3.0 RESPONSIBILITIES

The **Project Manager** or **Task Leader** (a qualified Nevada Certified Environmental Manager [C.E.M.]) will select site-specific CPT methods with input from the Field Team Leader and Site Geologist, and will maintain close supervision of activities and progress.

The **Field Team Leader** (a qualified Nevada C.E.M.) implements the selected drilling program and assists in the selection of CPT methods. If obstructions stop penetration of the cone penetrometer before total depth is reached, the Field Team Leader will instruct the rig operator to either abandon or relocate the CPT point.

The **Rig Geologist** selects site-specific CPT options; assists in preparing technical provisions for CPT fieldwork; obtains required permits and clearances before CPT testing begins; oversees CPT operations; and interprets site specific lithology based on graphical CPT plots.

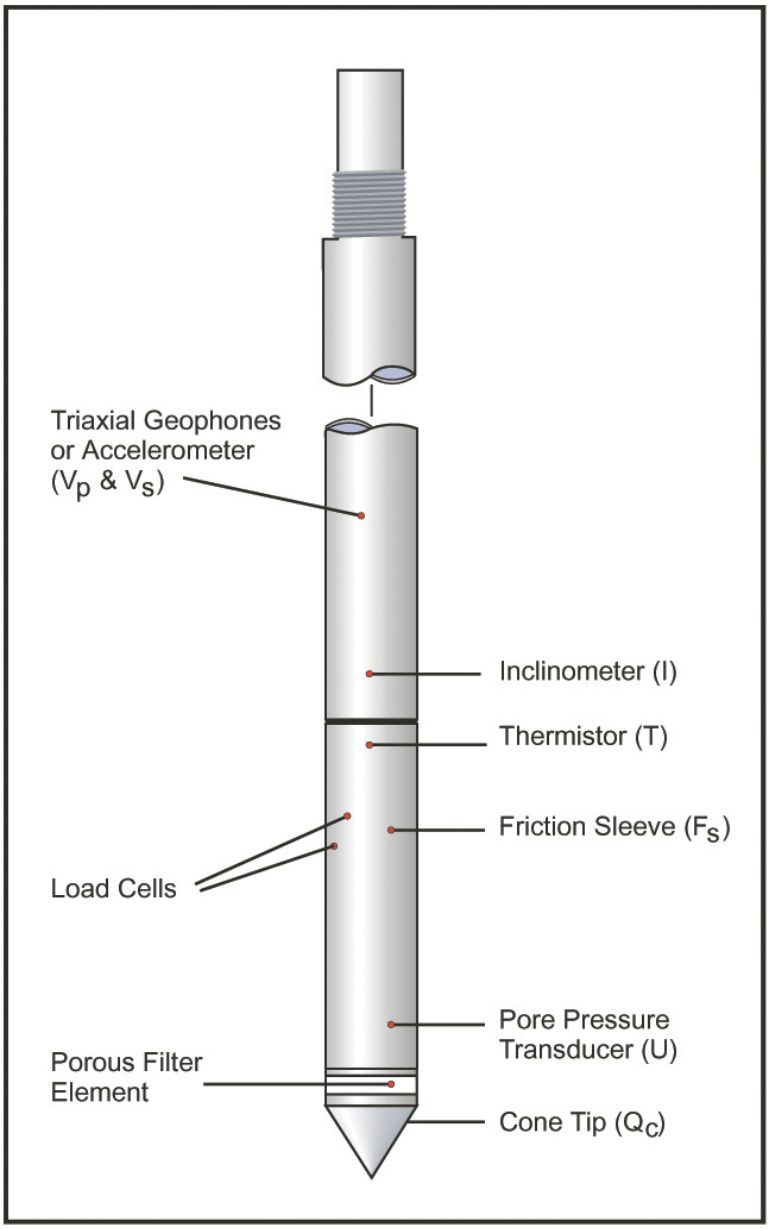

The electrical piezocone (CPTU) is the premier soil logging tool. The CPTU provides a rapid, reliable and economic means of determining soil stratigraphy, relative density, strength and equilibrium groundwater pressures.

CPTUs are available in 2.5, 5, 10, and 15 ton tip (Qc) capacity cones. Cones also have variable capacity friction sleeves (Fs) and pore pressure (U). The pore pressure can be measured at one of 2 locations, either on the face of the cone tip or behind the cone tip. Pore pressure dissipation data is recorded automatically.

All data is displayed in real time at the ground surface, facilitating the on site decision making process.

Source: ConeTec.

Figure 1 Terminology Regarding the Cone Penetrometer

4.0 CONE PENETROMETER TESTING

Sections 4.1 and 4.2 describe the type of data typically obtained by CPT methods and conventional interpretation techniques. Data error sources are described in Section 4.3 and applications of CPT are introduced in Section 4.4

4.1 Cone Resistance and Friction Sleeve Data

The recommended graphical presentation of CPT data should include the following:

- *qc* vs. depth (where *qc* = bearing force divided by bearing area)
- *fs* vs. depth (where *fs* = friction sleeve force divided by surface area of sleeve)
- R*f* vs. depth (where R*f* = friction ratio)
- Measured μ vs. depth
- Soil behavior type vs. depth

A typical graphical plot of CPT data is included as Figure 2 where the collected CPT data is represented from left to right as tip resistance, local friction, friction ratio, pore pressure, and soil behavior type. These plots are generated in the field so the rig geologist can make lithologic interpretations immediately. Stratigraphic information is obtained from CPT data by correlating tip resistance with friction ratio on a soil classification graph similar to the upper graph of Figure 3.

4.2 Pore Pressure Data

The addition of pore pressure measurement aids in the interpretation of geotechnical and hydrogeologic parameters, particularly in loose or soft saturated deposits. Advantages to using CPT equipped with a piezocone are as follows:

- Ability to distinguish between drained, partially drained and undrained penetration
- Ability to correct measured cone data to account for unbalanced water forces due to unequal end areas in cone design (see Section 4.3)
- Ability to evaluate flow and consolidation characteristics
- Ability to assess equilibrium groundwater conditions
- Improved soil profiling and identification
- Improved evaluation of geotechnical parameters (Robertson and Campanella, 1986)

Figure 2 contains a typical example of a field plot of pore pressure ratio vs. depth and Figure 4 shows an example plot of a pore pressure dissipation test.

4.3 Sources of Interpretation Error

Using the simple graphical techniques described in Sections 4.1 and 4.2 to interpret lithology from CPT data must be done with caution. When available, CPT data should be correlated with lithologic and/or geophysical data collected from soil borings in the immediate vicinity of the CPT location. This is important because of the many factors that affect CPT data. A few of the factors affecting data quality are listed below.

Unequal Area Effects

Water pressures can act on the exposed surfaces behind the cone tip and on the ends of the friction sleeve. These water forces result in measured tip resistance and sleeve friction values that do not represent true total stress resistances of the soil. Robertson and Campanella (1986) describe a method to correct for unequal area pore pressure effects. The importance of this correction is especially significant in soft clays, where high values of pore pressure and low cone resistance may lead to the physically incorrect situation of $\mu > qc$.

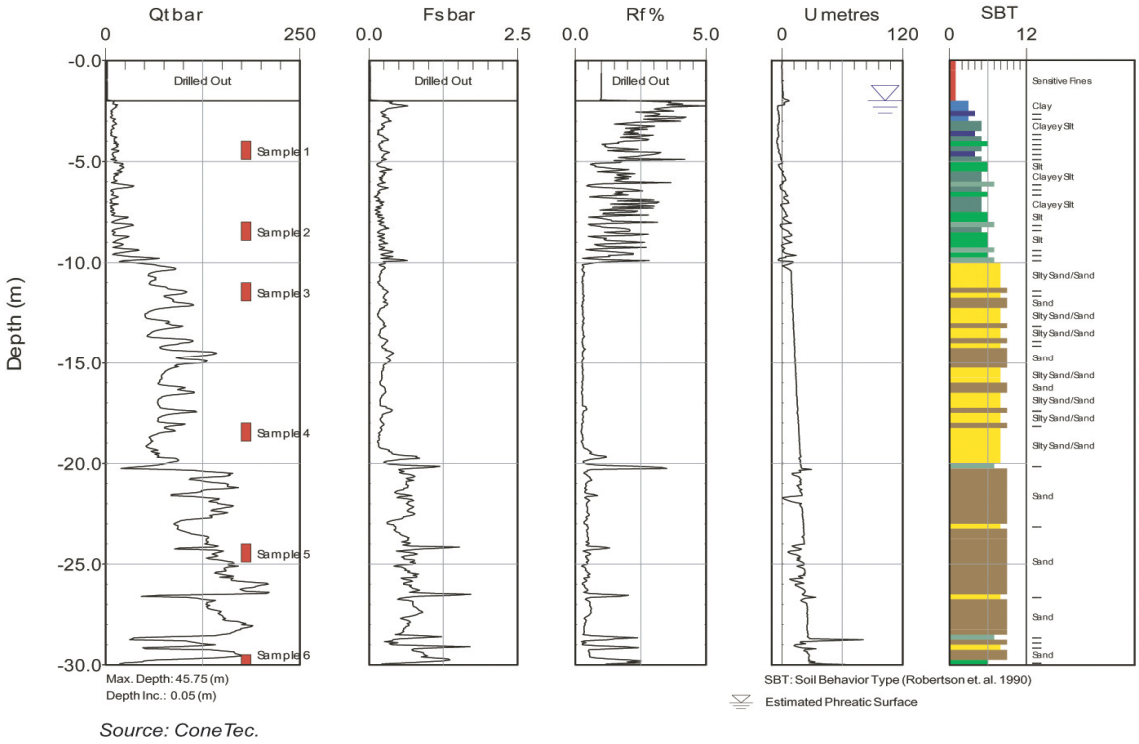

Figure 2 Field Plot of Tip Resistance and Local Friction

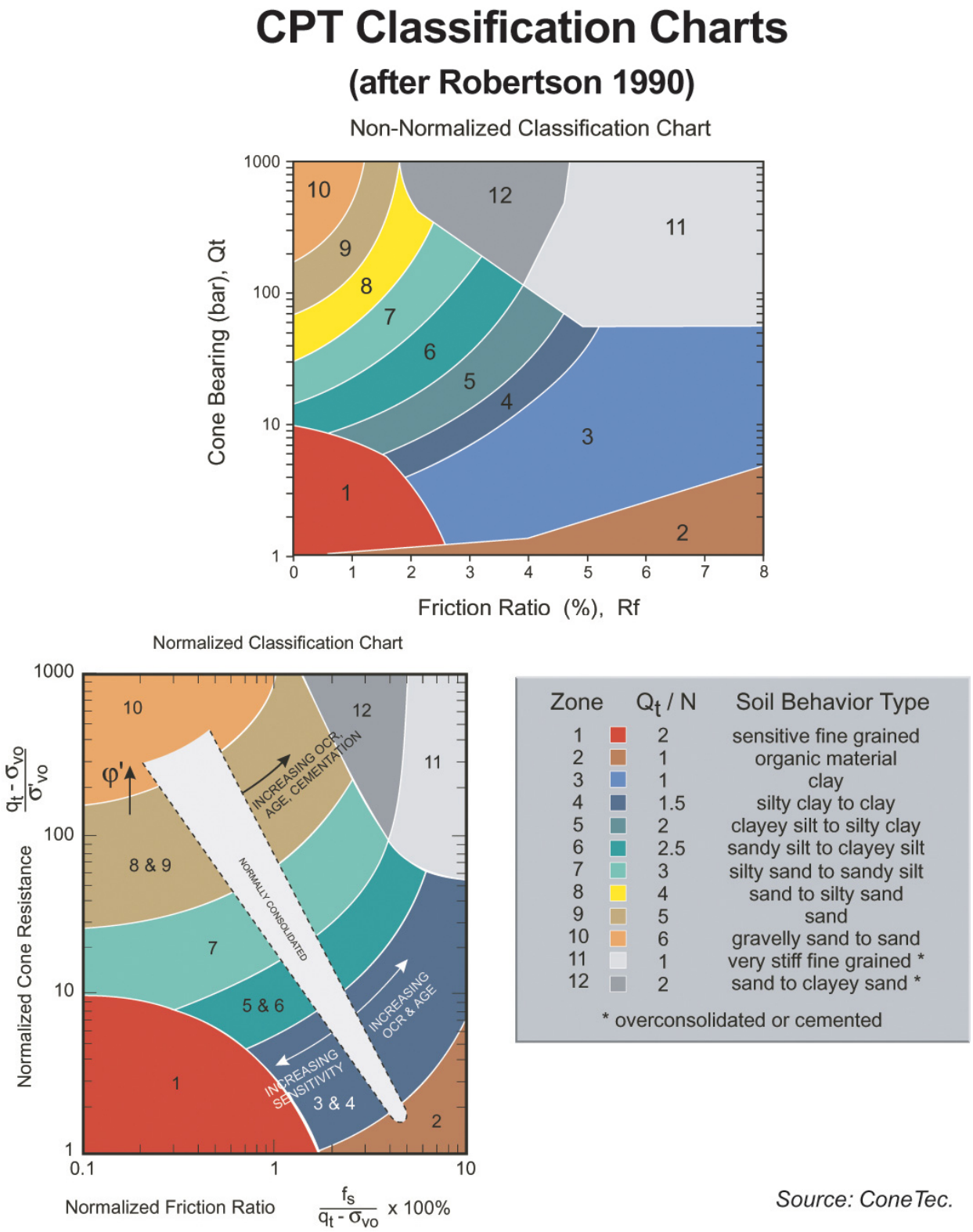

Figure 3 Proposed Soil Behavior Type Classification System from CPT Data

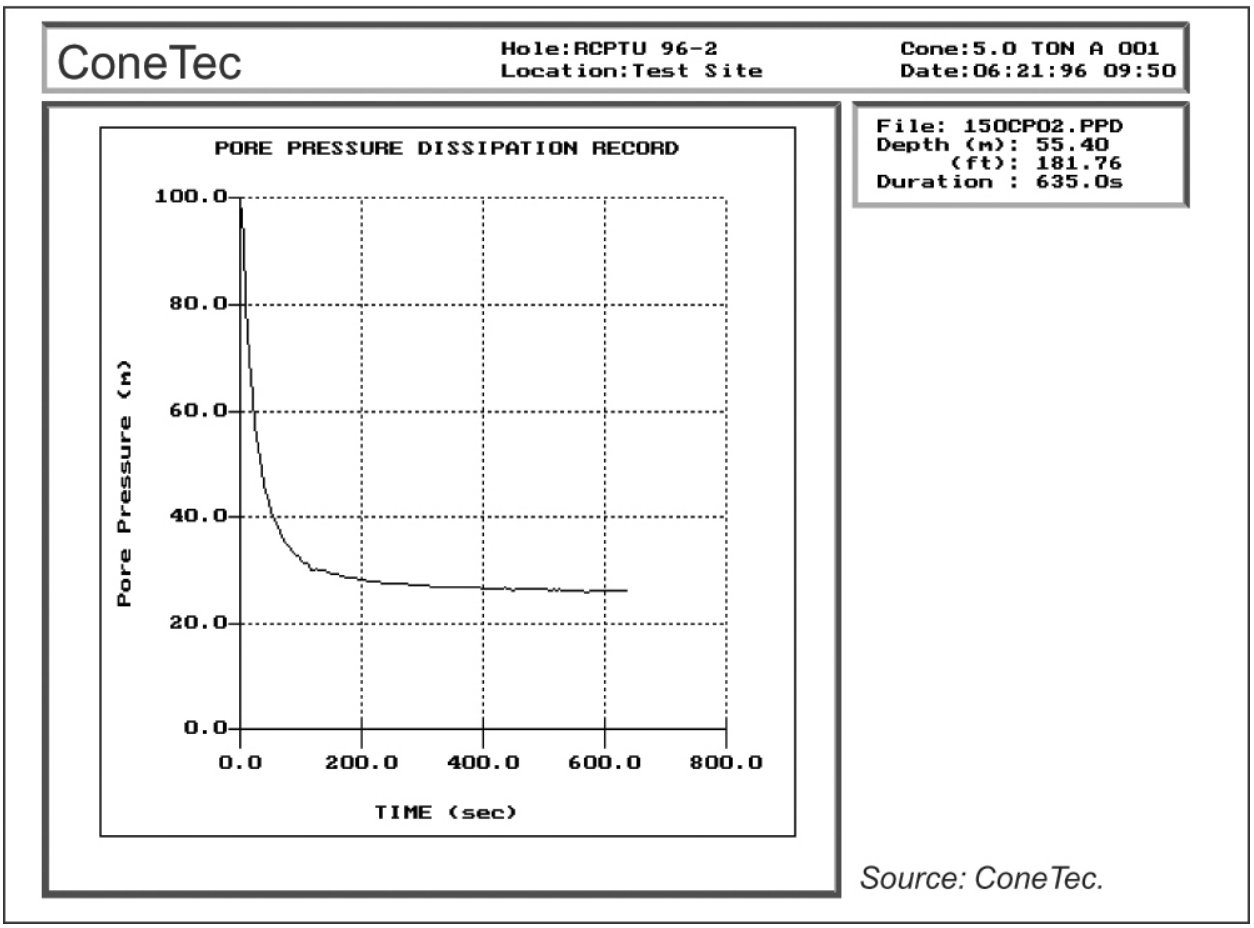

Figure 4 Field Plot of Pore Pressure

Temperature Effects

The load cells and pressure transducers within the electric penetrometer are often temperature dependent and are usually calibrated at room or air temperature. However, soil and groundwater are often considerably cooler than the calibration temperature and a shift in the zero can occur for both load cells and pressure transducers during penetration. For cone testing in dry sand, considerable heat can be generated during penetration. These changes in temperature have little consequence for cone testing in sand where measurements are usually large. However, the zero shift can be significant in very soft or loose soils. A temperature shift can make friction measurements very unrealistic especially with subtraction type cones where the zero shift may be different for each load cell. If the temperature of the cones is continuously monitored and temperature zero shift calibrations obtained, it is possible to correct all data as a function of temperature. These corrections are easily accommodated in a computer based acquisition system.

Layering Effects

Theoretical cavity expansion models and chamber test studies have shown that the cone penetration resistance is, *qc*, influenced by an interface ahead and behind the tip. The distance over which the cone tip senses an interface increases with increasing soil stiffness. Thus, the cone tip can respond fully (i.e., *qc* to reach full value within the layer) in thin soft layers better than in thin stiff layers. Chamber studies show that the tip senses an interface between 5 to 10 cone diameters ahead and behind. For interbedded deposits, the thinnest stiff layer the cone bearing can fully respond to is about 10 to 20 cone diameters. For the standard 10 cm^2 electric cone, the minimum stiff layer thickness to ensure full tip resistance is therefore between 14 inches to 28 inches (36 centimeters [cm] to 72 cm). Therefore, if a sand layer is less than about 28 inches (70 cm) thick and located between two soft clay deposits, the cone penetration resistance may not reach full value within the sand because of the close proximity of the adjacent interfaces. Thus, the relative density in the sand may be severely underestimated.

The continuous monitoring of pore pressures during cone penetration can significantly improve the identification of soil stratigraphy. The piezo-element (Figure 1) responds instantly to changes in pore pressure. The pore pressure develops in response to the soil type being penetrated in the immediate area of the pore pressure sensing element. For thin sand layers within a body of clay, the drainage characteristics of the sand become very important. Generally, sands give very low or negative pore pressures while clays are very high. Dilative silts also give low or negative pore pressures while contractive silts give high positive pore pressures.

Depth Effects

A problem that has been recognized for some time with soil classification charts that use *qc* and R*f* is that soils can change in their apparent classification as cone penetration resistance increases with increasing depth. Existing classification charts are based predominantly on data obtained from CPT profiles extending to a depth of less than 100 feet (30 meters). This is because measured parameters all tend to increase with depth due to increasing overburden stress. For example, the cone resistance will increase linearly with depth in a thick deposit of normally consolidated clay. Therefore, stratigraphic interoperations from CPT data obtained at depths greater than 100 feet (30 meters) may be erroneous.

4.4 Applications

The conventional CPT cone designed to collected *qc*, *fs*, and μ can be used for many applications. Robertson and Campanella (1986) describe a variety of geotechnical applications. The following list includes those applications that could aid in environmental site characterization studies:

- Checking the adequacy and uniformity of placed fill
- Locating bedrock
- Checking the amount of undesirable material for excavation
- Locating cavities in soft rocks, e.g., chalk
- Locating permafrost
- Pipeline investigations
- Determining depth to permeable zones for collection of groundwater samplings. Two methods commonly used, in conjunction with CPT, for groundwater collection are HydroPunch® and BAT® porous probe sampler.
- Characterization of location, orientation and extent of permeable zones.

In addition to the basic cone (Figure 1), other cones are available for the collection of various types of data. The following new cone designs are included as Attachment 2:

- Electrical Resistivity Cone Penetrometer
- Seismic Cone Penetrometer
- Ultra High Resolution Piezo Cone Penetrometer
- Ultra Violet Induced Fluorescence Cone Penetrometer
- Gamma Cone Penetrometer
- Active Gamma Penetrometer

More information on cone designs and applications is available through the internet at www.conetec.com.

4.5 Field Data Collection Procedures

4.4.1 Permits/Clearances

Before beginning field work, required regulatory drilling/exploratory boring permits must be acquired. This is the responsibility of the rig geologist. Depending on the geographical region, permits may be issued through local, county or state regulatory bodies. In addition to drilling/exploratory boring permits, utility clearances must be acquired from all pubic and/or private companies that potentially have utilities in the investigation site. Utilities must be clearly marked so the rig operator can avoid these lines. The subcontract should stipulate responsibility for severed utilities and damaged CPT equipment.

4.4.2 General Procedures

Efficient field operations with electric cone testing require skilled operators and adequate technical back-up facilities for calibration and maintenance of equipment. Equipment operators begin by leveling the CPT rig over the testing point. Leveling is accomplished with hydraulic jacks. Once level, the operator may run a "dummy cone" into the upper zone (0 to 3 feet, 0 to 1 meter below ground level), if gravel or random fill is suspected. Next, the operator will prepare the piezo-element, which involves de-airing of the porous filter element; de-airing of the cone, especially with respect to the pressure chamber immediately adjacent to the pressure transducer; and assembling of the cone and filter. The prepared cone is then lowered on a string of cone rods. The rate of penetration is set between 2 to 4 feet per minute (10 to 20 millimeters per second), ±25 percent when obtaining resistance data. During penetration, the electric penetrometer produces continuous data that requires relatively complex data collection and processing. The signals are usually transmitted via a cable pre-threaded down the standard push rods.

The digital data is incremental in nature, typically recording all channels every 5 cm in depth. Data is stored on floppy diskettes for future transfer of data to an office computer and plotter. Typically, printers and plotters are used in the field with microprocessors to calculate, print and plot data immediately after completion of or during cone tests.

In the field, simple check calibrations and procedures are essential after connecting the equipment to ensure that all is functioning properly. Between tests, the CPT operator should check the cone and friction sleeve for obvious damage or wear. The seals between different elements should also be cleaned and inspected. The site geologist should verify that load measurement systems are calibrated at intervals not to exceed three months, and more frequently when the equipment is in use continuously.

4.4.3 Penetration Abandonment

To comply with groundwater regulatory ordinances, all CPT holes must be sealed to protect aquifers from surface contamination and cross aquifer contamination. Typically, a tremmie line is run to total depth through a string of push rods. (If the rig operator is confident that the formation will not close, the tremmie line may be lowered by hand after the rig mobilizes off site.) The tremmie line remains in the hole while the push rods are removed. Then the hole is grouted with a bentonite/cement slurry, through the tremmie line, from total depth to ground surface, and the tremmie line is removed as the slurry rises in the hole.

5.0 REFERENCES

Robertson, P.K., and R.G. Campanella, 1986. Guidelines for Geotechnical Design using the Cone Penetrometer Test and CPT with Pore Pressure Measurement, Hogentogler and Company, Inc., P.O. Drawer 2219, Columbia, Maryland 21045 USA, Toll Free Phone: 1-800-638-8582.

ATTACHMENT 1

ASTM Designation: D3441-86

Standard Test Method for Deep, Quasi-Static, Cone and Friction-Cone Penetration Tests of Soil

Source: 1991 ANNUAL BOOK OF ASTM STANDARDS, Section 4, Construction, Volume 04.08.

making the additional tip penetration and the disturbed zone evaluated from these data. Then disregard data within the disturbed zone.

NOTE 18—Interruption of the piezocone sounding after a push allows the engineer to examine the dissipation of positive or negative excess pore water pressure.

6.7 *Below or Adjacent to Borings*—A cone or friction-cone sounding shall not be performed any closer than 25 boring diameters from an existing, unbackfilled, uncased boring hole. When performed at the bottom of a boring, the engineer should estimate the depth below the boring of the disturbed zone and disregard penetration test data in this zone. The depth may vary from one to five diameters. Where the engineer does not have sufficient experience with this variable a depth of at least three boring diameters should be used.

6.8 *Mechanical Penetrometers:*

6.8.1 *Inner Rod Friction*—Soil particles and corrosion can increase the friction between inner rods and push rods, possibly resulting in significant errors in the measurement of the resistance component(s). Clean and lubricate the inner rods.

6.8.2 *Weight of Inner Rods*—For improved accuracy at low values of cone resistance, correct the thrust data to include the accumulated weight of the inner rods from the tip to the topmost rod.

6.8.3 *Jamming*—Soil particles between sliding surfaces or bending of the tip may jam the mechanism during the many extensions and collapses of the telescoping mechanical tip. Stop the sounding as soon as uncorrectable jamming occurs.

6.9 *Electric Penetrometers:*

6.9.1 *Water Seal*—Provide adequate waterproofing for the electric transducer. Make periodic checks to assure that no water has passed the seals.

NOTE 19—Some electric tip sleeve designs are not compensated for hydrostatic end area effects and require a calibration correction. Determining the net end area of the cone under hydrostatic pressure also requires a hydrostatic calibration measurement. The tip manufacturer can usually supply these calibration correction constants. Their importance increases as the soil being tested becomes weaker.

7. Report

7.1 *Graph of Cone Resistance, q_c*—Every report of a cone or friction-cone sounding shall include a graph of the variation of cone resistance (in units of tons or kPa) with depth (in feet or metres). Successive cone-resistance test values from the mechanical cone and friction-cone penetrometers, usually determined at equal increments of depth and plotted at the depth corresponding to the depth of the measurement, may be connected with straight lines as an approximation for a continuous graph.

7.2 *Friction-Cone Penetrometer:*

7.2.1 *Graph of Friction Resistance*—In addition to the graph of cone resistance (7.1) the report may include an adjacent or superposed graph of friction resistance or friction ratio, or both, with depth. Use the same depth scale as in 7.1 (see 6.5).

7.2.2 *Graph of Friction Ratio, R*—If the report includes soil descriptions estimated from the friction-cone penetrometer data, include a graph of the variation of friction ratio with depth. Place this graph adjacent to the graph for cone resistance, using the same depth scale (see 6.5).

7.3 *Piezocone Penetrometer*—In addition to the 7.1 and 7.2 report requirements, a piezocone sounding shall include a parallel graph, to the same depth scale, of measured pore water pressure during the penetration versus depth. Excess pore water pressure versus time plots may also be constructed at those depths where the piezocone sounding is interrupted (see Note 1).

7.4 *General*—The operator shall record his name, the name and location of the job, date of sounding, sounding number, location coordinates, and soil and water surface elevations (if available). The report shall also include a note as to the type of penetrometer tip used, the type of thrust machine, tip and thrust calibration information, or both, any zero-drift noted, the method used to provide the reaction force, if a friction reducer was used, the method of tip advancement, the method of recording, the condition of the rods and tip after withdrawal, and any special difficulties or other observations concerning the performance of the equipment.

7.5 *Deviations from Standard*—The report shall state that the test procedures were in accordance with this Test Method D 3441. Describe completely any deviations from this test method.

8. Precision and Bias

8.1 Because of the many variables involved and the lack of a superior standard, engineers have no direct data to determine the bias of this method. Judging from its observed reproducibility in approximately uniform soil deposits, plus the q_c and f_s measurement effects of special equipment and operator care, persons familiar with this method estimate its precision as follows:

8.1.1 *Mechanical Tips*—Standard deviation of 10 % in q_c and 20 % in f_s.

8.1.2 *Electric Tips*—Standard deviation of 5 % in q_c and 10 % in f_s.

NOTE 20—These data may not match similar data from mechanical tips (see 1.3).

The American Society for Testing and Materials takes no position respecting the validity of any patent rights asserted in connection with any item mentioned in this standard. Users of this standard are expressly advised that determination of the validity of any such patent rights, and the risk of infringement of such rights, are entirely their own responsibility.

This standard is subject to revision at any time by the responsible technical committee and must be reviewed every five years and if not revised, either reapproved or withdrawn. Your comments are invited either for revision of this standard or for additional standards and should be addressed to ASTM Headquarters. Your comments will receive careful consideration at a meeting of the responsible technical committee, which you may attend. If you feel that your comments have not received a fair hearing you should make your views known to the ASTM Committee on Standards, 1916 Race St., Philadelphia, PA 19103.

ATTACHMENT 2

NEW CONE DESIGNS

Electrical Resistivity Cone

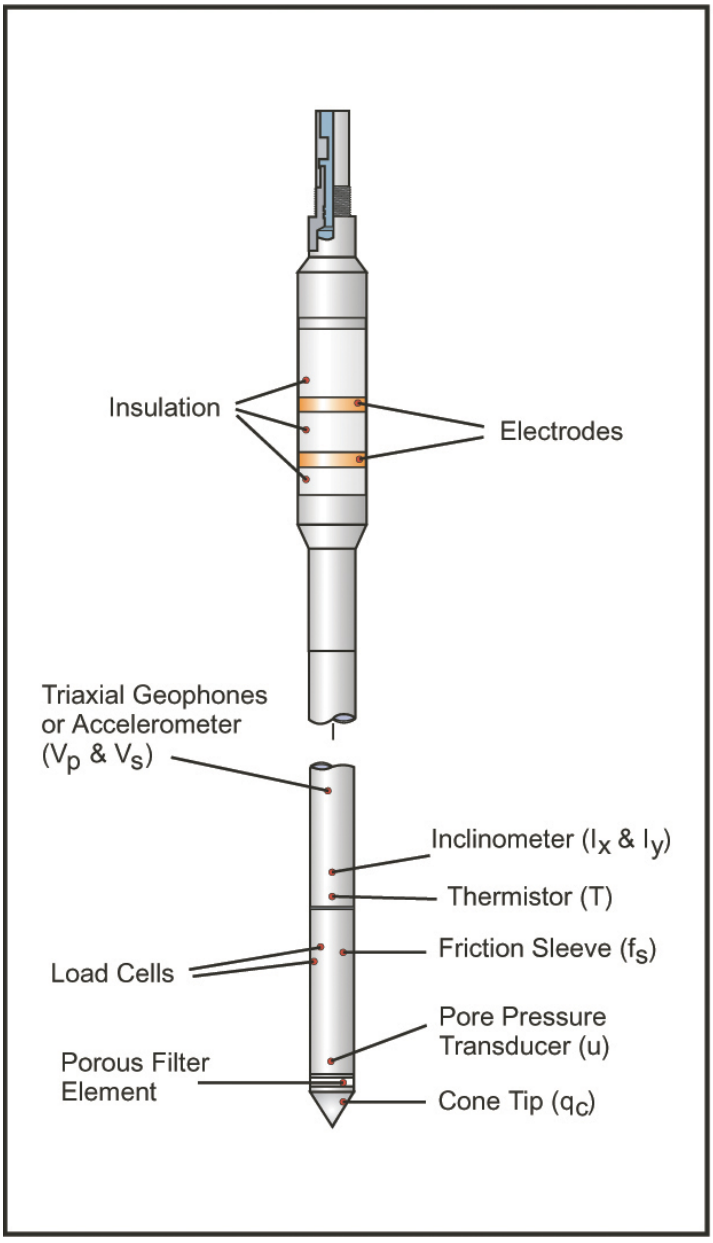

The resistivity cone penetration test (RCPTU) combines the downhole analysis of soil resistivity and the logging capabilities of the cone penetration test (CPTU). The RCPTU provides a rapid, reliable and economic means of determining soil permeability, stratigraphy, and strength in addition to providing relative measurements of electrical resistivity. The ability to determine groundwater and soil resistivity and various other soil parameters in one operation on a near continuous basis allows for the accurate profiling of contaminated groundwater plumes as well as some estimate of the rate and direction of groundwater flow through the soil. Identification of the lateral and vertical extent of contaminants enables the engineer/ scientist to rapidly implement a remedial works or recovery program thereby mitigating the potential damage caused by contaminated groundwater seepage.

Source: ConeTec.

Seismic Cone Penetrometer

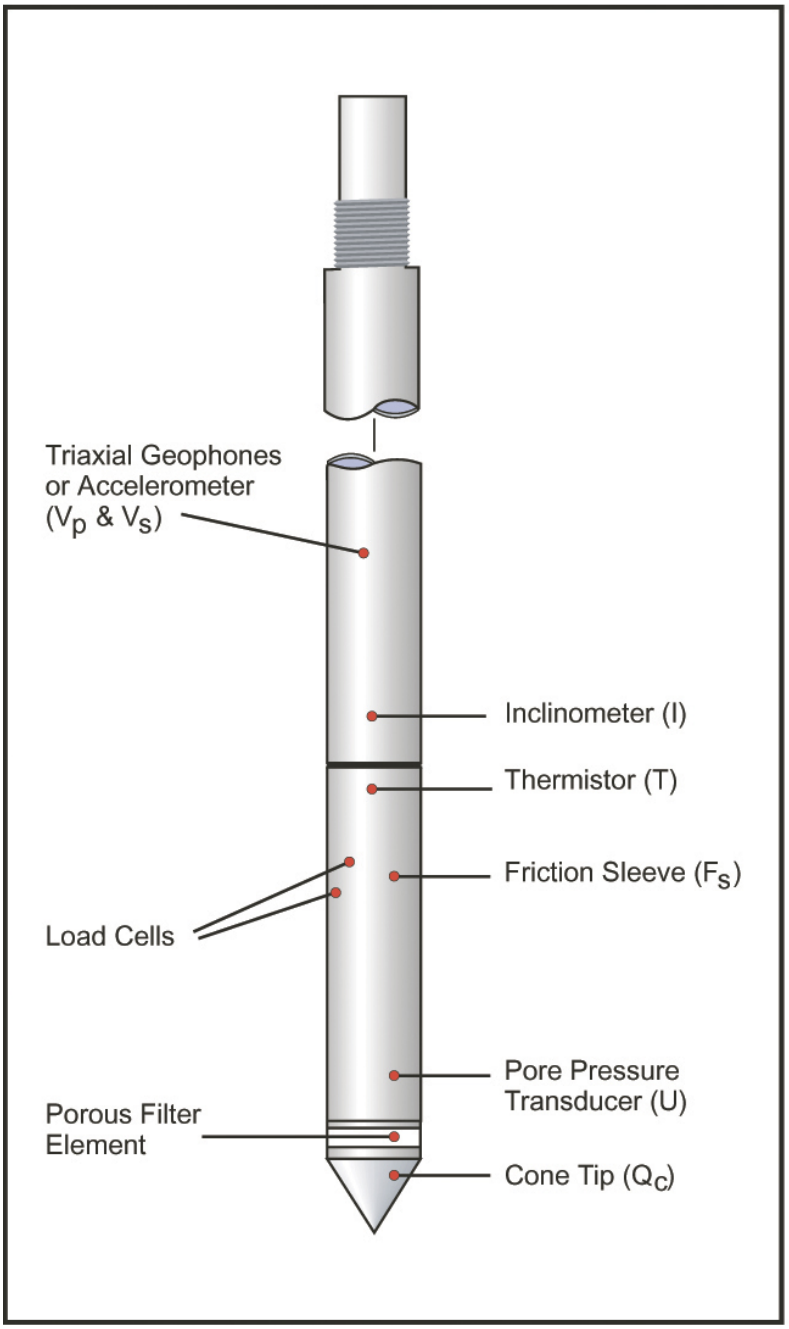

The seismic cone penetration test (SCPT) combines the seismic downhole method and the logging capabilities of the cone penetration test (CPT) to provide a rapid, reliable and economic means of determining soil stratigraphy, relative density, strength, shear and compressional wave velocities. From interval shear wave velocity (V_s) and the mass density (ρ) of a soil layer, the dynamic shear modulus (G_{max}) of the soil over a specific interval can be calculated according to the following expression:

$$G_{max} = \rho V_s^2$$

The dynamic shear modulus (G_{max}) is a key parameter for the analysis of soil behaviour in response to dynamic loading from earthquakes, ice, vibrating machine foundations, waves and wind.

In addition to using a hammer as an energy source, shotgun shells and standard seismic caps may also be employed to generate seismic waves.

Source: ConeTec.

Ultra High Resolution Piezo Cone Penetrometer

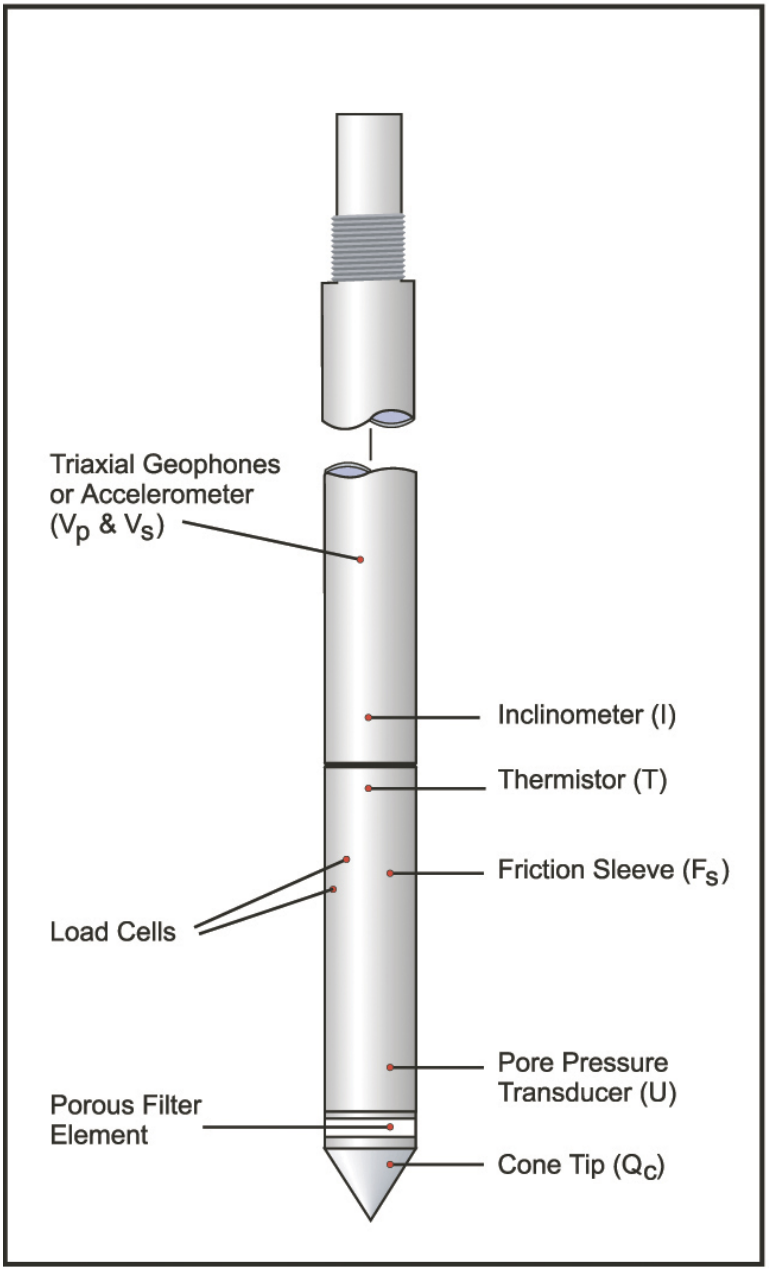

Ultra high resolution piezocone Penetrometer designed for the detection of slide failure surfaces and the evaluation of low strength mine tailings, normally consolidated clays and under-consolidated clays. The tip (qc) has a capacity of 40 tsf (bar) with a resolution of 0.04 tsf.

Other cones include a choice of 250, 500, 1000, and 1500 tsf tip (qc) capacities. Our cones also have variable capacity friction sleeves (fs) and pore pressure (u). The pore pressure can be measures at one of 2 locations, either on the face of the cone tip or behind the cone tip. Pore pressure dissipation data is recorded automatically.

The electrical piezocone (CPTU) is the premier soil logging tool. The CPTU provides a rapid, reliable and economic means of determining soil stratigraphy, relative density, strength and equilibrium groundwater pressures.

All data is displayed in real time at the ground surface, facilitating the on site decision making process.

Source: ConeTec.

UVIF Cone Penetrometer

The amalgamation of the ultra violet induced fluorescence (UVIF) module and the cone penetrometer with pore pressure measurement (CPTU) produces a powerful site characterization tool for geo-environmental investigations.

The UVIF module has high energy ultra violet light directed through a sapphire window into the soil and groundwater being penetrated. The ultra violet light causes fluorescence of contaminants contained within the soil and groundwater. The intensity of the fluorescence is detected downhole in the UVIF module. As the UVIF module collects information on contaminant characteristics, the CPTU characterizes the ground in terms of soil type, soil permeability, soil strength and phreatic surface. Therefore, at each test location an integrated vertical profile of contaminant location, relative contaminant concentration, soil stratigraphy and soil permeability are generated in real time on site. Having all of this information allows for on-site assessment and decision making resulting in optimization of the site investigation and ultimately a reduction in site characterization costs.

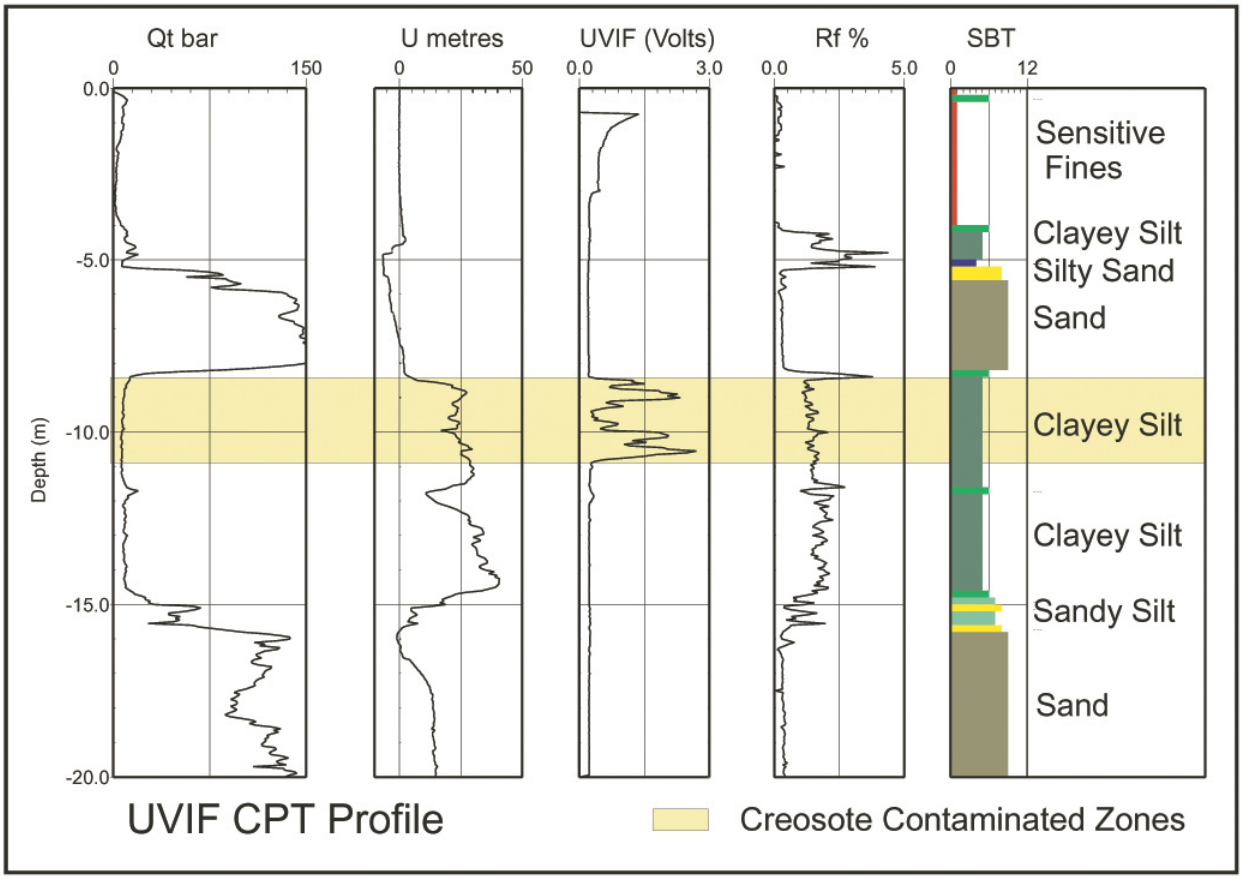

Source: ConeTec.

Gamma Cone Penetrometer (GCPT)

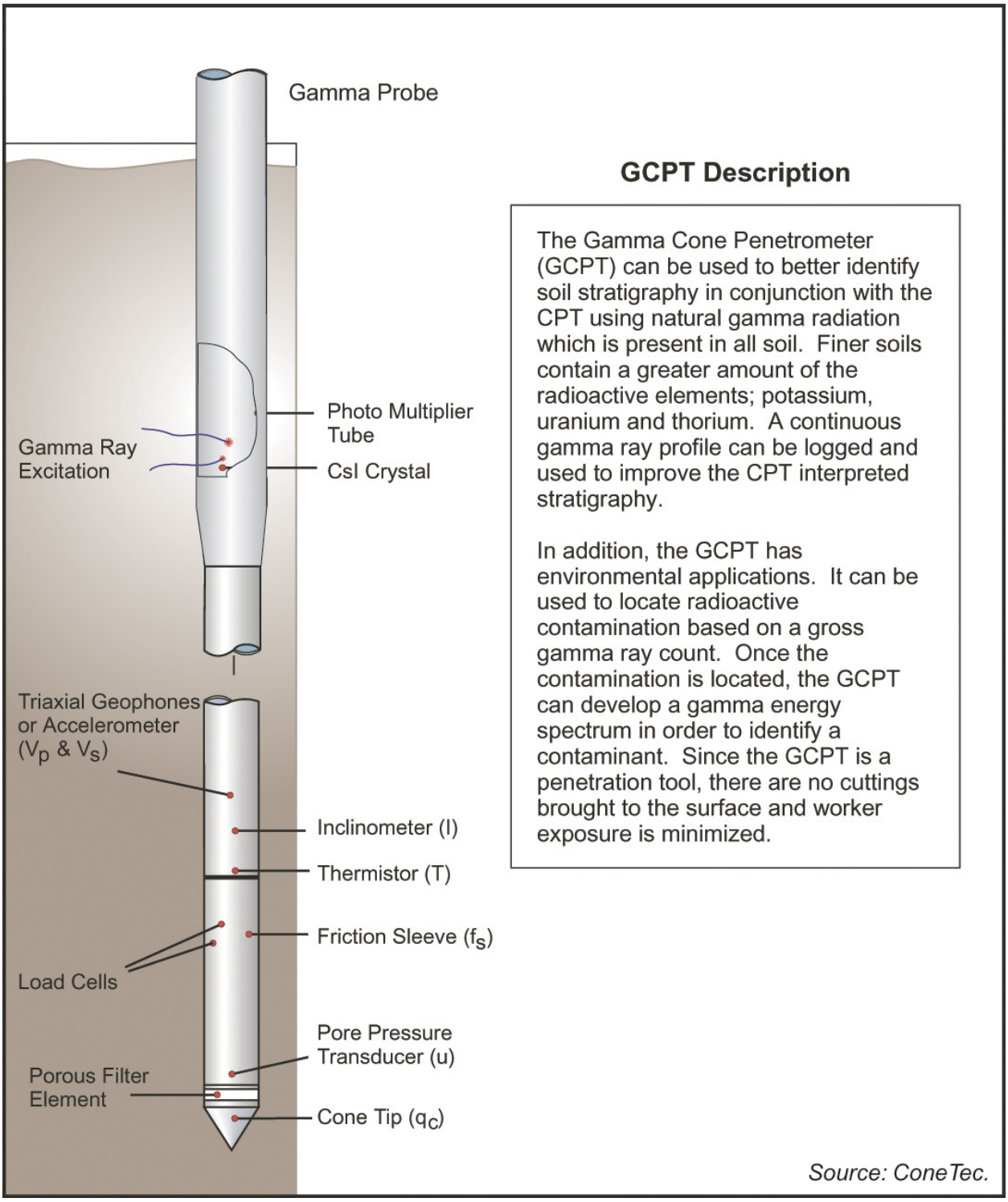

Active Gamma Penetrometer

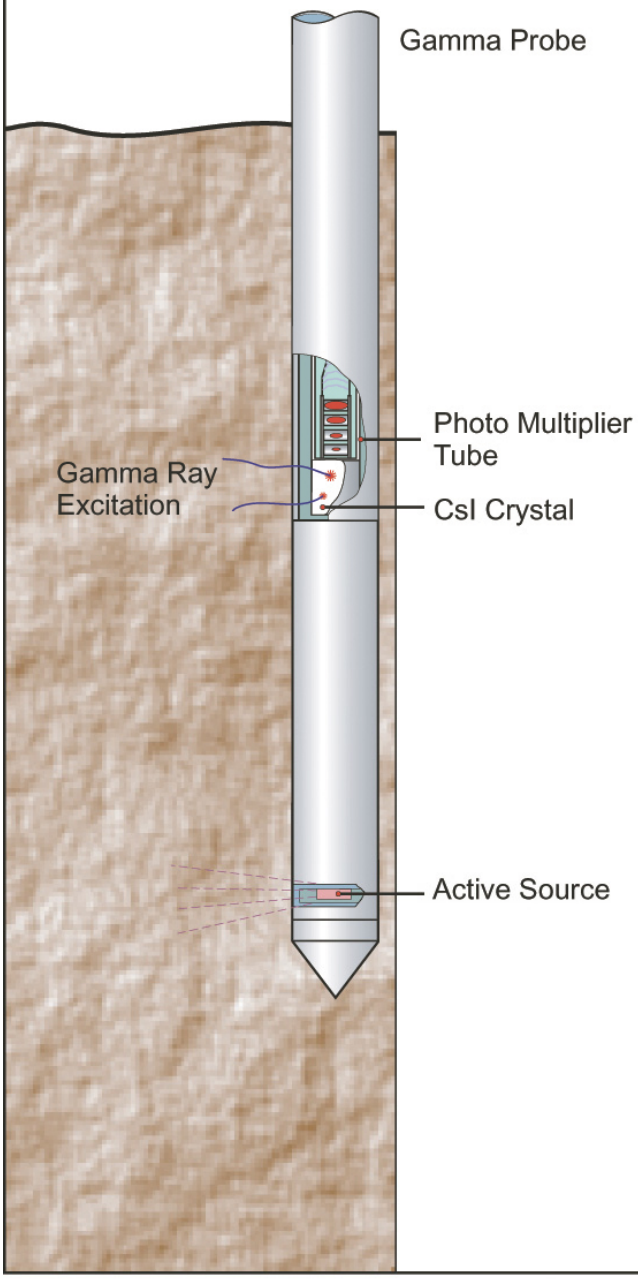

GCPT Description

The active gamma cone is used to measure in-situ soil density by logging the back-scattered gamma rays from a Cesium 137 source located in the tip of the probe. Denser soils will have a lower amount of back scatter thus a denser soil will cause the receiver to measure a lower gamma count. The back scatter measured by the receiver can be correlated to the density and the void ratio of the soil. The insitu density can be useful in saturated sands where liquefaction is a concern. Due to the difficulty involved in obtaining undisturbed samples of sand for lab testing, this is a very desirable method for measuring soil density.

BASIC REMEDIATION COMPANY
STANDARD OPERATING PROCEDURES
BMI COMMON AREAS
CLARK COUNTY, NEVADA

SOP-12

SURFACE SOIL SAMPLING FOR ASBESTOS

STANDARD OPERATING PROCEDURES

SOP-12
SURFACE SOIL SAMPLING FOR ASBESTOS

TABLE OF CONTENTS

Section **Page**

1.0 SAMPLE COLLECTION PROCEDURES 1
1.1 Procedure for Collection of Grab Samples for Determination of Moisture and Silt Content 1
1.2 Procedure for Collection of Composite Samples for Determination of Asbestos 2

2.0 QUALITY CONTROL SAMPLING 3
2.1 Composite Duplicates 3

3.0 OTHER PROCEDURES 3
3.1 Sample Labeling 3
3.2 Decontamination of Field Equipment 4
3.3 Chain of Custody 5
3.4 Documentation 5

DISCLAIMER

THE FOLLOWING STANDARD OPERATING PROCEDURE PROVIDES GENERAL GUIDANCE FOR BRC CONTRACTORS FOR TECHNICAL ISSUES ADDRESSED DURING ENVIRONMENTAL SITE INVESTIGATION AND REMEDIATION ACTIVITIES. IT IS NOTED, HOWEVER, THAT EACH SITE IS UNIQUE AND THESE GUIDELINES ARE NOT A SUBSTITUTE FOR COMMON SENSE AND GOOD MANAGEMENT PRACTICES BASED ON PROFESSIONAL TRAINING AND EXPERIENCE. IN ADDITION, INDIVIDUAL CONTRACT TERMS MAY AFFECT THE IMPLEMENTATION OF THIS STANDARD OPERATING PROCEDURE. BRC CONTRACTORS RESERVE THE UNRESTRICTED RIGHT TO CHANGE, MODIFY OR NOT APPLY THESE GUIDELINES IN THEIR SOLE, COMPLETE, AND UNRESTRICTED DISCRETION TO MEET CERTAIN CIRCUMSTANCES, CONTRACTUAL REQUIREMENTS, SITE CONDITIONS, OR JOB REQUIREMENTS.

1.0 SAMPLE COLLECTION PROCEDURES

Each selected sampling location is to serve as the center of a 50 feet by 50 feet sampling grid, which is to be further divided into four quadrant grid squares that are each 25 feet on a side. Grab samples for determination of moisture and silt content are to be collected from the center of the overall sampling grid. Samples to be collected for determination of asbestos content are to be composites constructed from four component samples with one component collected from a pre-selected, random location from within each of the four grid squares (quadrants) of the sampling grid.

The manner in which each sample type is to be collected, prepared, labeled, and packaged is described below.

1.1 Procedure for Collection of Grab Samples for Determination of Moisture and Silt Content

A minimum of 1 Liter (2 kilogram) of material is to be collected for determination of moisture and silt content. As currently planned, the material from the samples collected are to be sealed in a 1-gallon Ziploc bag. Note: The use of Ziploc bags for soil moisture content samples can result in poor moisture content estimates. It is difficult to verify that the bags are completely sealed and stay sealed. In addition, the bags can be easily punctured. Normally, moisture content samples are placed in plastic or metal containers with tight fitting lids.

Surface samples shall be collected by:

1. Placing a 12-inch template on the ground so that it is centered over the selected sampling location;
2. Using a trowel to scope dirt from within the template to a depth of one inch. The material collected is to be placed in a (pre-weighed) 1-gallon Ziploc bag;
3. Specifically for these samples, once filled, it is important to create an air-tight seal on the sampling container. Thus, be sure to seal the Ziploc bags completely and to test them to be sure that the seal is air tight; and
4. Weigh (to the nearest 0.2 g), label, and prepare the sealed containers for shipment to the laboratory.

Importantly, it is generally unlikely that so much of a 144 square-inch area (demarcated by the template) around a selected sampling location would be comprised of rocks, construction debris, or other materials that make collection of a sample impossible. However, in the rare case the sampling is found to be impossible, the sampling location is to be moved 12 inches to the due south and the fact that the sampling location had to be moved is to be noted in the field log. In the remote possibility that sampling at this first-alternate location is also impossible, the sample location may be moved an additional 12-inches due south, as long as this second change is also noted in the field log. Such modifications may be repeated up to four times, if absolutely necessary, until a suitable location for sampling is encountered. However, any such modification of location must only be because more than half of the template area of a previous location is impossible to sample.

1.2 Procedure for Collection of Composite Samples for Determination of Asbestos

As previously indicated, composites for determination of asbestos are to be constructed by combining material from four component samples each collected from a preselected, random location within one of the four grid squares (quadrants) of the sampling grids:

1. At each defined (random) location within each of the four grid squares, the surface to be sampled (a square area that is approximately 1 foot on a side) is first to be cleared of vegetation, biological debris, stones, and any construction debris that is obviously non-asbestos containing material [ACM]). Gently hand pick these materials and remove them from the sampling area. If the area to be sampled is heavily vegetated, it may first be cleared using a scythe or other cutting tool;

2. Once cleared, use a clean trowel in a reproducible manner to scrape material from a one-inch depth centered on the identified sampling location, until the trowel is sufficiently full to satisfy Step 3;

3. Gently pour the material from the trowel into a clean container with a mark indicating a volume of 125 cubic centimeters (cm^3; approximately one-half cup, English units). If the presence of a large piece of debris, rock, or other solid object is picked up by the trowel but is too large to reasonably include within the indicated sample volume (i.e. if it comprises more than one half of the volume of the sample), remove the object, characterize it as potential ACM or non-ACM and note the modification to the sample in the field log. Also, continue filling the sample container to replace the volume removed. If the object is not ACM, it may be discarded. It the object is ACM, it should be separately bagged, labeled, and

shipped to the laboratory as an object associated with the particular sample. Note; be sure that the container indicating the sample volume can be filled from a single trowel scoop.

4. Quantitatively transfer the component sample from the container indicating the sample volume to a clean, pre-weighed sample container and combine all four component samples of a particular composite into the same sample container; and

5. Weigh (to the nearest 0.2 gram), label, and prepare the sealed containers for shipment.

2.0 QUALITY CONTROL SAMPLING

Material for quality control (QC) samples need to collected in the field, in addition to the project samples already discussed. These are composite duplicates.

2.1 Composite Duplicates

At all sampling sites from which a composite duplicate is to be collected, a second set of four randomly selected sampling locations (one within each of the four grid squares of the sampling grid) needs to be identified. These locations need to be selected in addition to (and in a manner assuring that they are entirely independent of) the locations originally identified at the same sampling site for the project sample.

This second set of random sampling locations is then to be treated as it is for a unique sampling site. Thus, both a set of surface and sub-surface composite samples for the determination of asbestos need to be constructed from samples collected at these locations (for packaging, labeling, and shipment to the laboratory) and a set of surface and sub-surface composite samples for the determination of ACM content need to be collected and processed in the field.

3.0 OTHER PROCEDURES

Following are procedures to be followed for sample labeling, documentation, decontamination, and chain-of-custody.

3.1 Sample Labeling

Each sample to be shipped for laboratory analysis will be labeled with a unique number that will include the sample site identification number, an indication as to whether the sample is a surface

or sub-surface sample, an indication as to whether the sample is an original sample or a composite duplicate, an indication of whether the sample is intended for silt/moisture content analysis or asbestos analysis, and the date that the sample is collected. It is thus suggested that sample numbers be constructed with 11 digits as follows:

QQ-YZ-mm-dd-yy

where:

QQ is the two digit code indicating the sampling site from which the sample was collected;

Y is either a 0 or a 1 indicating whether the sample is a project sample or a composite duplicate, respectively;

Z is either an A or an M indicating whether the sample is intended for asbestos or moisture/silt analysis, respectively; and

the last set of digits represents the date in standard format.

3.2 Decontamination of Field Equipment

Prior to use in the field, all sampling equipment (e.g. trowels and templates) will be decontaminated by washing with biodegradable soap, rinsing with asbestos-free water, and drying either with asbestos-free cloth rag or forced air. If forced air is used, it must be High Efficiency Particulate Air (HEPA) filtered to assure that it remains asbestos-free. Sampling equipment will be similarly decontaminated prior to removing it from the site.

Between collections of individual soil samples, sampling equipment may be wiped clean with a clean, asbestos-free cloth rag.

Wash and rinse water will be collected and containerized, and handled with the contractor's decontamination unit wastewater. Any disposable materials used for decontamination (e.g. rags) will be disposed with ACM waste.

3.3 Chain of Custody

The Project Coordinators representative will manage sample handling, transport and storage with appropriate Chain-of-Custody documentation.

3.4 Documentation

The following information will be recorded for each soil sample collected during this project:

1. The sample identifier (including the grid square number and the date that the sample was collected);
2. The times that the sample were collected;
3. The Global Positioning System (GPS) location of the sample;
4. Any required modifications to the location initially selected for sample collection along with the reasons (i.e. the nature of any field obstructions) for needing such modification;
5. any changes or modifications required to the above-indicated procedures for sample collection;
6. relevant observations concerning the condition (presence of vegetation, color and condition of soil, relative apparent moisture content, etc.) of the location from which the sample is collected (to be supplemented with photographs);
7. Documentation of any ACM (size, nature, color, type, etc.) observed at the sample location; and
8. Any other, potentially relevant information concerning the conditions under which the sample is collected (e.g. any required weights or similar information).

BASIC REMEDIATION COMPANY
STANDARD OPERATING PROCEDURES
BMI COMMON AREAS
CLARK COUNTY, NEVADA

SOP-13

OPERATING AND CALIBRATION PROCEDURES FIELD EQUIPMENT

STANDARD OPERATING PROCEDURES

SOP-13
OPERATING AND CALIBRATION PROCEDURES
FIELD EQUIPMENT

TABLE OF CONTENTS

Section **Page**

1.0 INTRODUCTION 1

2.0 DEFINITIONS 1

3.0 RESPONSIBILITIES 1

4.0 GUIDELINES 3
- 4.1 Applicability 3
- 4.2 Multi-Parameter Water Quality Meters for Field Measurements 3
  - 4.2.1 Calibration 4
  - 4.2.2 Operation 4
  - 4.2.3 Maintenance 4
- 4.3 Lamotte Model 2020 Turbidity Meter 4
  - 4.3.1 Calibration 5
  - 4.3.2 Operation 5
- 4.4 Water Level Meters 5
  - 4.4.1 Operation 5
  - 4.4.2 Maintenance 6
- 4.5 Interface Meter 6
  - 4.5.1 Operation 6
  - 4.5.2 Maintenance 7
- 4.6 Portable Photoionization Analyzer 7
  - 4.6.1 Calibration 8
  - 4.6.2 Operation 8
  - 4.6.3 Maintenance 9
- 4.7 Carbon Monoxide, Combustible Gas and Oxygen Indicator 9
- 4.8 Alpha-Beta-Gamma (Pancake) Detector 11
- 4.9 Draeger Hand Pumps and Direct-Read Colorimetric Indicator Tubes 11
  - 4.9.1 Operation 12
  - 4.9.2 Maintenance 12

DISCLAIMER

THE FOLLOWING STANDARD OPERATING PROCEDURE PROVIDES GENERAL GUIDANCE FOR BRC CONTRACTORS FOR TECHNICAL ISSUES ADDRESSED DURING ENVIRONMENTAL SITE INVESTIGATION AND REMEDIATION ACTIVITIES. IT IS NOTED, HOWEVER, THAT EACH SITE IS UNIQUE AND THESE GUIDELINES ARE NOT A SUBSTITUTE FOR COMMON SENSE AND GOOD MANAGEMENT PRACTICES BASED ON PROFESSIONAL TRAINING AND EXPERIENCE. IN ADDITION, INDIVIDUAL CONTRACT TERMS MAY AFFECT THE IMPLEMENTATION OF THIS STANDARD OPERATING PROCEDURE. BRC CONTRACTORS RESERVE THE UNRESTRICTED RIGHT TO CHANGE, MODIFY OR NOT APPLY THESE GUIDELINES IN THEIR SOLE, COMPLETE, AND UNRESTRICTED DISCRETION TO MEET CERTAIN CIRCUMSTANCES, CONTRACTUAL REQUIREMENTS, SITE CONDITIONS, OR JOB REQUIREMENTS.

1.0 INTRODUCTION

This Standard Operating Procedure (SOP) provides basic information on operating procedures for equipment that is typically used in the field. Field monitoring instruments are used when data quality objectives specify Level I and Level II analytical support. Level I analysis provides data for on site, real-time measurements, evaluation of existing conditions, refinement of sampling locations, and health and safety evaluations. The objective of Level I analysis is to generate data that are generally used in refining sampling plans and in estimating the extent of contamination at the site. This type of support also provides real-time data for health and safety purposes. The purpose of this SOP is to outline the calibration and operating procedures for equipment used for field monitoring.

2.0 DEFINITIONS

None.

3.0 RESPONSIBILITIES

The following is a general description of responsibilities related to calibration and operating procedures for equipment used for field monitoring.

The **Project Manager** or **Task Leader** (a qualified Nevada Certified Environmental Manager [C.E.M.]) is responsible for identifying the appropriate equipment necessary to adequately define the parameters.

The **Health and Safety Coordinator** will work with the Project Manager in identifying the appropriate safety equipment. The Health and Safety Coordinator will also perform audits to observe field personnel using the equipment. If the equipment is not being used properly, the Health and Safety Coordinator will provide the necessary training and resources.

The **Field Team Leader** (FTL) (a qualified Nevada C.E.M.) is responsible for including a refresher course on the proper use, calibration, and maintenance of all equipment to be used on the project as part of the kick-off meeting. The FTL will ensure on a daily basis that all field

team members properly use the equipment through the duration of the project. When the equipment is owned by Basic Remediation Company (BRC) and is scheduled for or requires maintenance, these functions are conducted by qualified individuals or by sending the equipment to the manufacturer or a repair company. Before the instrument is taken into the field, it will be inspected and calibrated by the FTL to ensure that it is operating properly.

Field Team Members are responsible for renting equipment required for the project. The equipment should have proper calibration solutions and certification, if required. The equipment that will be used should be shipped to the site and be inspected and calibrated in accordance with the equipment's manual prior to use at the site.

If the equipment is owned by BRC or BRC Contractor, Field Team Members are to follow the procedure listed below. Prior to mobilization, a field team member will be required to check out equipment or supplies requested for the project and sign an equipment checklist form stating that all equipment is functioning, can be calibrated, is in good condition, all the necessary parts are included in the case, and all supplies requested are present. At that time, all equipment will be calibrated, if applicable, and checked for proper use by a field team member and the FTL.

The field team members will be responsible for carefully reviewing instruction manuals for the equipment to be used on the project. All field team members will be required to sign a form indicating that they know how to properly operate each piece of equipment that will be used on their project.

This SOP provides a general description of the calibration and operating procedures defined in the manufacturer's instruction manual, which accompanies each piece of equipment. This SOP should be used as a general reference and the manufacturer's instruction manual should be followed at all times by field team members when using the equipment.

4.0 GUIDELINES

4.1 Applicability

These procedures apply to all work conducted for BRC, by BRC Contractors, or under the direction of BRC or its' Contractors. The information in this SOP may be incorporated into project-specific plans. Deviations or modifications to procedures not addressed in the project plans must be handled as a corrective action.

To protect the equipment, it must be kept in the proper cases, packaged properly, and/or secured during transport. If equipment is damaged during transport because it was not properly secured in its case, resulting charges will be directly applied to the job.

Equipment or supplies at job sites should never be left unsecured where they can be lost or stolen. If equipment is lost or stolen while it is checked out to a project, that project will be responsible for replacing the equipment.

Any equipment failures are to be reported immediately to the FTL and returned as soon as possible for repairs. This notification ensures that proper charges/credits are documented and that a replacement is delivered to the site.

All equipment will be decontaminated at the job site prior to returning the equipment.

4.2 Multi-Parameter Water Quality Meters for Field Measurements

There are numerous multi-parameter meters available. Any meter used to collect field measurements should be equipped with probes to measure pH, dissolved oxygen (DO), conductivity, temperature, turbidity, and oxidation-reduction potential (REDOX). These measurements should be recorded in the following units:

- standard pH units
- DO—milligrams per liter (mg/L)
- Conductivity—milliSiemans per meter (mS/m)
- Temperature—degrees centigrade (°C)

- Turbidity—Nephelometric Turbidity Units (NTUs)
- REDOX—millivolts (mV)

A relative accuracy of ±0.1 pH, ±0.2 mg/L, ±3% mS/m, ±1°C, ±5% NTU, and ±15 mV is adequate for the type of measurement being performed.

4.2.1 Calibration

Always calibrate the instrument according to the manufacturer's instructions, taking into account the guidelines provided in this section. The meter must be calibrated before the start of each workday and checked periodically throughout the workday. The instrument can be generally calibrated with one solution (auto calibration) or can be calibrated by a span calibration, which will give more accurate readings. Consult the instruction manual for further details.

4.2.2 Operation

The main use of this instrument is in a flow-through cell, which will take a reading as water is being continuously pumped through using the low flow or purging methods. The reading can be taken at any time while water is moving through the flow-through cell. Be aware that the meter is not waterproof, but the probe is waterproof.

4.2.3 Maintenance

Clean and decontaminate the instrument at the end of each project. Use a solution of soapy water. Rinse the instrument with clean water. Do not clean the instrument while it is disassembled. Rinse the probe several times with distilled or deionized water.

See the manual for instructions on replacing batteries either in the probe or in the LCD readout meter.

4.3 Lamotte Model 2020 Turbidity Meter

The LaMotte Model 2020 portable turbidity meter measures the amount of light scattered at right angles from a beam of light passing through the test sample. Turbidity readings are the measure

of the interaction of light with suspended solid particles in the sample. Test results are read directly in NTUs on the LCD digital readout. The accuracy of the LaMotte is ±2% for readings below 100 NTU and ±3% for readings above 100 NTU.

4.3.1 Calibration

The turbidimeter is pre-calibrated in LaMotte laboratories, and a simple standardization is the only step required prior to testing. Two standards are supplied with each Model 2020 turbidimeter for standardization.

Always calibrate the instrument according to the manufacturer's instructions taking into account the guidelines provided in this section. The meter must be calibrated before the start of each workday and checked periodically throughout the workday. Consult the instruction manual for further details.

4.3.2 Operation

Rinse the sample tube with the liquid sample and shake the excess liquid out. Fill the sample tube to its neck, taking care to pour the sample gently down the side to avoid creating any bubbles. Cap the sample tube. While holding the sample tube by the cap only, wipe the outside surface with a clean, lint-free, absorbent wipe until the tube is dry and smudge-free. Insert the sample tube, make sure the arrows line up and close top to the chamber, and press button to read the sample.

4.4 Water Level Meters

4.4.1 Operation

Upon receipt of meter, set the switch to "on" position. To check the circuit, submerse the electrode (probe) in tap water. This completes the circuit and activates the buzzer. Depress the test button to test the battery and circuitry.

The zero measurement on most meters is at the tip of the inner electrode, visible near the center of the probe.

4.4.2 Maintenance

After the depth of water has been recorded, the cable should be carefully rewound onto the reel, the probe wiped dry and replaced into the probe holder. Decontaminate the probe, cable, and reel between each use.

To replace the battery, remove the face plate on the reel by unscrewing the three faceplate screws and carefully lifting off to the side to avoid damaging the wiring. Replace the 9-V battery making sure the polarity is correct. Replace the faceplate.

4.5 Interface Meter

4.5.1 Operation

Turn main switch to the “on” position. Also twist probe to the “on” position. A flashing light on the faceplate indicates that the probe is in the “on” position, but the main switch is not “on.” A continuous buzz indicates that the main switch is “on”, but the probe is “off.”

Lower probe slowly until lights and audible tone are on. Raise and lower the probe gently to determine the exact upper level of the nonconductive floating product. Note level from marked tape. If no floating product exists, one single light will come on.

Continue to lower the probe until only one light is on. Shake the probe slightly at this point to clear any residual product from the conductivity sensor. Raise the probe slowly until both lights and the audible tone are on to determine the product/water interface. Read level directly from the tape.

Repeat steps 2 and 3 to confirm readings.

Continue lowering the probe to the bottom of the well to determine if any sinking product is present in the well. If both lights and buzzer come on, determine the top of the layer by reading directly from the tape.

One light indicates a conductive liquid (i.e., water).

Both lights plus the audible tone indicate a non-conductive liquid (i.e., product).

4.5.2 Maintenance

The tape should be wiped and carefully rewound onto the reel after each use. The probe should be cleaned with a cleaner, rinsed with a hexane and distilled water mixture, wiped, and returned to the holder. Make sure both switches are turned off.

To replace the battery in the reel, remove the three screws in the faceplate and carefully lift to one side. Replace the heavy-duty 9-V alkaline or lithium type battery, noting the proper polarity. Replace the faceplate and three screws, being careful to keep all wires within the hub.

To replace the probe battery, remove the three Phillips screws at the top of the probe. Gently pull the probe body apart to expose the battery holder. Remove and replace the 9-V lithium or heavy-duty alkaline battery. Ensure correct polarity when replacing the battery. Check the three wire connections between the battery holder and the probe body to ensure a tight connection. Push the probe body back together and replace the screws.

4.6 Portable Photoionization Analyzer

The photoionization analyzer uses an ultraviolet light source to ionize individual molecules that have an ionization potential less than or equal to that rated for the ultraviolet light source. Ambient air is drawn into the chamber with the aid of a small fan. Gaseous contaminants are ionized as they emerge from the column, and the ions are then attracted to an oppositely charged electrode, causing a current, and finally an electric signal that is proportional to the number of ions. See SOP-39 for additional information on photoionization analyzer principles and procedures.

The analyzer has the following limitations:

- It does not detect methane.
- It does not detect a compound if the probe used has a lower energy level than the compound's ionization potential.
- Response may change when gases are mixed.
- Other voltage sources such as power lines may interfere with the measurements.
- Readings can be reported only relative to the calibration standard used.
- Response is affected by high humidity.
- During cold weather, condensation may form on the ultra-violet (UV) light source window, resulting in erroneous results.
- Total concentrations are relative to the calibration gas used. Therefore, contaminant concentrations cannot be identified. Also, while the instrument scale reads 0 to 2,000 parts per million (ppm), response is linear to the calibration gas.
- Greater concentrations may be "read" at a higher or lower level than the true value.
- Wind speeds of greater than 3 miles an hour may affect fan speed and readings, depending on the position of the probe relative to wind direction.

4.6.1 Calibration

There are two steps to the calibration: fresh air and a span calibration to a standard gas. See the operation manual for the specific model being used. Also note that there are two different types of bulbs (9.25 electron volt [eV] and 11.7 eV).

Calibration events will be documented in a logbook. Documentation will include the date inspected, person responsible for calibrating the instrument, the instrument number, calibration results, calibration gas information (source, type, concentration).

4.6.2 Operation

Unpack the instrument carefully. Unclamp the fasteners on the instrument cover from the main readout assembly. Remove the inner lid from the instrument cover by pulling out the two

one-quarter turn fasteners. Remove the probe, handle, and cable from the instrument cover. Attach the handle and probe extension to the probe.

4.6.3 Maintenance

Perform routine calibration prior to each use and at the end of each day.

Factory calibrate yearly, when malfunctioning, when the span setting exceeds the maximum span setting for the probe in use, and after the UV light source has been replaced.

Clean the main readout assembly after each use. Thoroughly decontaminate the instrument at the completion of the project.

Recharge the battery daily.

Care should be taken when sampling over solids and liquids so that it is not drawn into the instrument.

4.7 Carbon Monoxide, Combustible Gas and Oxygen Indicator

Ambient air monitoring at hazardous waste sites is a common safety practice. Activity at a site may cause disturbances that release hazardous vapors into the ambient air. These releases can be detected by commercially available portable air monitoring devices that register real-time data. This data can be used to establish the existence of hazards such as oxygen deficient or explosive atmospheres. Personnel protective levels may be based on these readings.

The combustible gas sensor of the Model 360 is designed to measure combustible gas or vapor content in air. It will not indicate the combustible gas content in an inert gas background, furnace stack, or in other atmospheres with less than 10 percent oxygen. Further, these instruments should not be used where the oxygen concentrations exceeds that of fresh air (oxygen enriched atmospheres) because the extra oxygen makes any combustible mix easier to ignite and, thus, more dangerous.

Combustible gases will burn or explode only when the fuel/air mixtures are within certain proportions. The minimum concentration of a particular combustible gas in air that will burn and continue to burn when ignited is defined as the lower explosive limit (LEL). The maximum concentration that can be ignited is defined as the upper explosive limit (UEL).

A small pump pulls the atmospheric sample through a filter and pushes it through the flow indicator and the manifold blocks in which the toxic gas, combustible gas and oxygen sensors are mounted. The flow is then exhausted to the side of the case. The approximate flow rate is 1.5 liters per minute.

It is important that every work area be evaluated by someone trained in hazard control to make sure that the correct instrument is chosen and to determine whether other instruments are necessary to assess the hazard. Evacuate all personnel from the area if the instrument the alarm indicates the possibility of a hazardous condition.

To establish a zero background reading, the explosimeter should be prepared for operation in an area known to be free of combustible gases and vapors. A flush of fresh air should be passed through the instrument to zero the meter needle.

Prior to each day's usage, sensitivity must be tested on a known concentration of each of the gases for which the instrument is calibrated. The indication must be equal to or higher than the actual concentration.

Calibration should be checked and adjusted in fresh air at the elevation where the instrument is to be used. Refer to the manual for more calibration information.

Consult the manufacturer's instruction manual for details.

4.8 Alpha-Beta-Gamma (Pancake) Detector

Radiation or radioactivity is the property of the nucleus of an atom to spontaneously emit energy in the form of high-energy electromagnetic waves or particles. Types of radiation that are of concern are alpha and beta particles, and gamma and X-radiation.

Stable atoms of an element are composed of a dense nucleus containing an equal number of protons and neutrons. Surrounding the nucleus are clouds or orbits of electrons. The number of electrons in the atom of an element equals the number of protons. The number of neutrons in the atom can vary and, if it does, the atom is known as an isotope. Most isotopes are radioactive; they are unstable and tend to transform into an atom of a different element called a "daughter" by releasing a particle (either alpha or beta) or by emission of gamma and X-rays. The type of energy released and the rate of this release (decay rate or half-life) is particular to each isotope. An isotope can be identified by determining the type of energy released by measuring the decay rate.

Radiation detectors operate on the principle that radiation causes ionization in the detection media. The ions produced are counted electronically, and a relationship is established between the number of ionizing events and the quantity of radiation present.

Consult the manufacturer's instruction manual for details.

4.9 Draeger Hand Pumps and Direct-Read Colorimetric Indicator Tubes

The colorimetric tube and pump measure the concentrations of specific inorganic or organic vapors and of gases that cause a discoloration, which is proportional to the amount of material present. The detector tubes are specific for individual compounds, or groups of compounds, and require specific sampling techniques. This information is supplied with the tubes; it details the required sample volume, the proper tube preparation and insertion into pump, and the applicability and limitations of the individual tube. A known volume of air is drawn through a reagent using a pump. The compound reacts with the indicator chemical in the tube, producing a stain whose length or color change is proportional to the compound's concentration.

Some of the limitations are the measured concentration of the same compound may vary among different manufacturer's tubes. Many similar chemicals interfere. The tubes provide limited accuracy and results are dependent on the operator's judgment. Readings are affected by high humidity.

4.9.1 Operation

Do not use an opened tube.

Complete a pump check at the beginning of each operational day. Check the pump for leaks before and after use by placing a tube into the suction inlet of the pump and completely depressing the bellows. The bellows should not completely extend in fewer than 30 minutes.

Refrigerate the tubes prior to use to help maintain the shelf life. Always check the expiration date on the tubes prior to use. Break off both tips of the Draeger tube in the break-off eyelet located on the front pump plate.

Tightly insert the tube into the pump head with the arrow pointing toward the pump head. If multiple tubes are used (i.e., vinyl chloride), join the tubes with the rubber tube provided, then insert the tube into the pump head.

Fully compress the bellows and allow the bellows to re-extend until the chain is taut. Repeat as often as specified in the tube operating instructions.

Evaluate the tube according to instructions.

4.9.2 Maintenance

Each unit on return from the field should be visually examined for surface dirt, deformities, cracks, and cuts.

The pump integrity will be checked in the following manner:

- Block the inlet with an unopened tube.
- Fully compress; then release the pump bellows. If the bellows do not completely fill (limit chain slack) in 30 minutes, the unit is operating properly. If the unit does not pass the leak test, proceed as follows:
- Remove the pump plate.
- Unscrew the valve with the special wrench provided.
- Clean the valve in water and dry.
- Replace the disc if it is sticky, brittle, hard, or cracked.
- Reassemble and retest.
- Calibrate the pump volume at least quarterly.

BASIC REMEDIATION COMPANY
STANDARD OPERATING PROCEDURES
BMI COMMON AREAS
CLARK COUNTY, NEVADA

SOP-14

FIELD DOCUMENTATION

STANDARD OPERATING PROCEDURES

SOP-14
FIELD DOCUMENTATION

TABLE OF CONTENTS

Section **Page**

1.0 INTRODUCTION 1

2.0 DEFINITIONS 1

3.0 RESPONSIBILITIES 1

4.0 FIELD DOCUMENTATION GUIDELINES 2
- 4.1 Field Logbooks 2
- 4.2 Tailgate Safety Meetings 6
- 4.3 Daily Quality Control Reports 7
- 4.4 Boring Logs 7
- 4.5 Well Construction Diagrams 9
- 4.6 Groundwater Sampling and Development Logs 10
- 4.7 Aquifer Testing Logs 11
- 4.8 Documentation of Sampling Activities 11
  - 4.8.1 Sample Labels 11
  - 4.8.2 Custody Seals 12
  - 4.8.3 Chain-of-Custody Records 12
  - 4.8.4 Sample Register 13

LIST OF ATTACHMENTS

Attachment 1 Tailgate Safety Meeting Form
Attachment 2 Daily Quality Control Report
Attachment 3 Example Boring/Lithologic Log Form
Attachment 4 Example Well Construction Form
Attachment 5 Monitoring Well Development/Sampling Form
Attachment 6 Aquifer Testing Form
Attachment 7 Sampling Documentation and Tracking Form

DISCLAIMER

THE FOLLOWING STANDARD OPERATING PROCEDURE PROVIDES GENERAL GUIDANCE FOR BRC CONTRACTORS FOR TECHNICAL ISSUES ADDRESSED DURING ENVIRONMENTAL SITE INVESTIGATION AND REMEDIATION ACTIVITIES. IT IS NOTED, HOWEVER, THAT EACH SITE IS UNIQUE AND THESE GUIDELINES ARE NOT A SUBSTITUTE FOR COMMON SENSE AND GOOD MANAGEMENT PRACTICES BASED ON PROFESSIONAL TRAINING AND EXPERIENCE. IN ADDITION, INDIVIDUAL CONTRACT TERMS MAY AFFECT THE IMPLEMENTATION OF THIS STANDARD OPERATING PROCEDURE. BRC CONTRACTORS RESERVE THE UNRESTRICTED RIGHT TO CHANGE, MODIFY OR NOT APPLY THESE GUIDELINES IN THEIR SOLE, COMPLETE, AND UNRESTRICTED DISCRETION TO MEET CERTAIN CIRCUMSTANCES, CONTRACTUAL REQUIREMENTS, SITE CONDITIONS, OR JOB REQUIREMENTS.

1.0 INTRODUCTION

This Standard Operating Procedure (SOP) is a general reference for the required documentation to be completed by company personnel during field investigations. Subject to the requirements of the contract, records in the form of field logbooks, reports, and forms should normally be completed for the various field activities. Records should be maintained on a daily basis as the work progresses, and should contain enough information to allow the Field Event to be completely reconstructed. All field records must be accurate, objective, and legible, because it is part of the client's product and may potentially serve as a legal document. As the field logbook is often the only record of the work conducted during the Field Event, it should normally be photocopied at least every week.

Sample field documentation forms are attached.

2.0 DEFINITIONS

None

3.0 RESPONSIBILITIES

All field team members are responsible for recording daily activities. An in-depth description of the documentation mentioned below is given in later sections.

The **Field Team Leader** (FTL; a qualified Nevada Certified Environmental Manager [C.E.M.]) is responsible for completing the FTL logbook, Daily Quality Control Reports (DQCRs), documentation concerning supervision of team members, and duplication and distribution of applicable records.

The **Rig Geologist/Sampling Team** (including a qualified Nevada C.E.M.) is responsible for completing the drilling logbook; lithologic logs; well construction diagrams; sampling documentation such as sample labels, sample register, and chain-of-custody (COC) forms.

The **Water Sampling/Development Team** is responsible for completing the water sampling/development logbook; groundwater sampling/development logs; and sampling documentation such as sample labels, sample register, and COC forms.

The **Aquifer Data Collection Team** is responsible for completing the aquifer logs (e.g., slug tests, step-drawdown tests, pump tests), water level records, and data organization/tracking (e.g., downloading of data from data loggers).

4.0 FIELD DOCUMENTATION GUIDELINES

Field documentation serves as the primary foundation for all field data collected that will be used to evaluate the project site. Field documentation must be accurate, legible, and written in indelible ink. Absolutely no pencils or erasures are to be used. Mistakes are to be crossed out with one line, dated, and initialed. Skipped pages or blank sections at the end of a page should be crossed out with an "X" covering the entire page or blank section, dated and initialed. The person making the correction should write "No Further Entries," and date and initial the page. The responsible field team member should sign and log the date and time after the last entry for the day. To further assist in the organization of the field books, logs, or forms, the date and the significant activity description (e.g., boring or well number) should be written at the top of each page. Each project job number should have its own field book. In addition, all original field documentation should be included with the project files.

The descriptions of field data and documentation given below serve as a guideline; individual projects will vary in documentation needs, depending on the circumstances surrounding the project and the needs of the client.

4.1 Field Logbooks

The field logbook should be a bound, weatherproof book with consecutively numbered pages that serves primarily as a daily log of the activities carried out during the investigation. All entries should be made in indelible ink. A field logbook should be completed for each operation undertaken during the investigation, such as field team leader notes, drilling, groundwater sampling/development, and site visitors. The logbook serves as a diary of the events of the day.

Field activities will vary from project to project; however, the concept and general information to be recorded will be generally consistent. The following sections describe the minimum information that should normally be recorded in the three logbooks in which field activities are documented.

FTL Logbook

The FTL's responsibilities include the general supervision, support, assistance, and coordination of the various field investigation activities. A large portion of the FTL's day is spent rotating between operations in a supervisory role. Records of the FTL's activities, as well as a summary of the field team's activities, are maintained in a logbook. The FTL's logbook will be used to fill out DQCRs, and as such should contain all information required in these reports (Section 3.3). Items to be documented include the following:

- Record of tailgate meetings
- Personnel and subcontractors on job site and time spent on the site
- Field operations and personnel assigned to these activities
- Site visitors
- Log of the FTL's activities—time spent supervising each operation and summary of daily operations as provided by field team members
- Problems encountered and related corrective actions
- Deviations from the sampling plan
- Records of communications—discussions of job-related activities with the client, subcontractor, field team members, and project manager
- Information on addresses and contacts
- Record of invoices signed and other billing information
- Field observations

Rig Geologist/Sampling Team Logbook

The rig geologist or sampling team leader is responsible for recording the following information:

- Health and safety activities
  - Calibration records for health and safety equipment (type of photoionization detector (PID), calibration gas used and associated readings, noise dosimeters, etc.)
  - Personnel contamination prevention and decontamination procedures
  - Record of daily tailgate safety meetings

- Weather
- Calibration of field equipment
- Equipment decontamination procedures
- Personnel and subcontractors on the job site and time spent on the site
- Site name and well or soil boring number
- Drilling activities
  - Sample location (sketch)
  - Drilling method and equipment used
  - Borehole diameter
  - Drill cuttings disposal/containerization (number of drums, roll off-bins, etc.)
  - Type and amount of drilling fluids used (mud, water, etc.)
  - Depth and time at which first groundwater was encountered, depth to water at completion of drilling, and the stabilized depth to water—absence of water in the boring should also be noted
  - Total drilling depth of well or soil boring
  - Type and amount of materials used for well installation
  - Well construction details—depth of grout (mixture, weight), bentonite seal, filter pack, etc. (include type and amount used, calculate estimated amount that should be used)
  - Type and amount of material used to backfill soil borings
  - Time and date of drilling, completion, and backfilling
  - Name of drilling company, driller, and helpers
- Sampling
  - Date and time of sample collection
  - Sample interval
  - Types of samples taken
  - Number of samples collected
  - Analyses to be performed on collected samples
- Disposal of contaminated wastes (personal protective equipment, paper towels, Visqueen®, etc.)
- Field observations
- Problems encountered and corrective action taken

- Deviations from the sampling plan
- Site visitors

Groundwater Sampling/Development Logbook

The groundwater sampling and development team members are responsible for recording the following information:

- Health and safety activities
  - Calibration records for health and safety equipment (i.e., type of PID, calibration gas used and readings, noise dosimeters etc.)
  - Personnel contamination prevention and decontamination procedures
  - Record of daily tailgate safety meetings
- Weather
- Calibration of field equipment
- Equipment decontamination procedures
- Personnel and subcontractors on job site and time spent on the site
- Equipment decontamination procedures
- Disposal of contaminated wastes (personal protective equipment, paper towels, Visqueen®, etc.)
- Site name and well number
- Water levels and product levels—time and datum that water levels are measured (i.e., top of casing); purging of the well (include calculations, well volumes) with the following information:
  - Measured field parameters (temperature, pH, conductivity, odor, color, cloudiness, etc.)
  - Amount of water purged
  - Purge method—indicate bailer/pump, diameter and length of bailer, material that the bailer is composed of, type of pump, new nylon rope, etc.
- Purge water disposal and containment (Baker tank/ drums, number used, identification, etc.)
- PID readings from inside of well, purged water, and breathing zone (Note: see SOP-39 for additional information on PID principles and procedures.)

- Background PID readings
- Well sampling
  - Number of samples collected and type of containers used
  - Date and time of sample collection
  - Type of analyses
  - Quality assurance/quality control (QA/QC) samples collected; names given to blind samples
- Field observations
- Problems encountered and corrective actions taken
- Deviations from the sampling plan
- Site visitors

4.2 Tailgate Safety Meetings

Tailgate safety meetings are held at the beginning of each day before the start of work. All personnel, subcontractors, and others who will be on the job site are required to attend. The meetings are usually conducted by the FTL, on-site safety officer, or other qualified team member. The topics discussed at the meeting include the following:

- Directions to the hospital
- Protective clothing and equipment
- Chemical hazards
- Physical hazards
- Special equipment
- Emergency procedures
- Emergency phone numbers

All site personnel are required to sign the tailgate safety meeting form (Attachment 1). The original form is kept on site, and a copy sent to the home office.

4.3 Daily Quality Control Reports

The preparation of DQCRs (Attachment 2) is the responsibility of the FTL. DQCRs are completed on a daily basis to summarize the events of the day and supplement the information that is already recorded in the field logbook. DQCRs should be completed regardless of the duration of the field effort. Copies of the report are distributed to the BRC Project Manager, Project Geologist, field office file, and home office file. Information recorded in this report should include the following.

- Date and weather information—date, daily temperatures, wind speed and direction, humidity
- Personnel and time spent on site
- Subcontractors and time spent on site
- Special equipment on site—PID, Smeal water sampling rig, hollow-stem auger Rig, pH meter, conductivity meter, etc.
- Work and sampling performed—personnel performing specific site activities, a summary of samples collected, and a thorough explanation of the work completed
- Quality control activities—e.g., decontamination procedures, QA/QC samples taken, calibration of field equipment
- Health and safety levels and activities—field parameter measurements, including calibration of equipment; daily tailgate safety meetings, level of protection used, etc.
- Problems encountered/corrective actions taken—any technical difficulties (e.g., problems encountered during drilling or equipment breakdowns); any problems that could potentially affect the quality of the samples should be included
- Special notes—any information that does not fit under the categories listed above, but is important to record; information that would be useful for future sampling, (e.g., base contacts made, visitors on site, etc.)
- Next day activity expectations
- Date/Signature of individual completing the report

4.4 Boring Logs

The preparation of drill logs is the responsibility of the field team members assigned to the drill rig. A detailed description of well logging is provided in the SOP for Lithologic Logging,

SOP-17. Several examples of drilling logs are given in the attachments for SOP-17. An example lithologic log form is shown in Attachment 3. The exact format depends on the job and the client; however, the following basic information should normally be recorded on the log regardless of the format:

- Project and site name
- Name of driller and drilling company
- Type of drill rig used
- Drill rig contamination procedures
- Well/soil boring ID and location (sketch)
- Drilling and backfilling dates and times
- Reference elevation for all depth measurements
- Total depth of completed soil boring/well
- Depth of grouting, sealing, and grout mixes
- Signature of the logger.
- Description of unconsolidated materials
  - Geologic lithology description
  - Descriptive Unified Soil Classifications System (USCS) classification
  - USCS symbol
- Color (use appropriate soil color chart)
  - Penetration resistance (consistency or density)
  - Moisture content
  - Grain size information
  - Miscellaneous information (odor, fractures, visible contamination, etc.)
- Description of consolidated materials
  - Geologic rock description
  - Rock type
  - Relative hardness

  - Density
  - Texture
  - Color (use appropriate rock color charts)
  - Weathering
  - Bedding
  - Structures (fractures, joints, bedding, etc.)
  - Miscellaneous information (presence of odor, visible contamination, etc.)

- Stratigraphic/lithologic changes; depths at which changes occur
- Depth intervals at which sampling was attempted and amount of sample recovered
- Blow counts
- Depth intervals from which samples are retained
- Analyses to be performed on collected samples
- Depth at which first groundwater was encountered, depth to water at completion of drilling, and the stabilized depth to water. The absence of water in the boring should also be noted.
- Loss and depth of drilling fluids, rate of loss, and total volume of loss
- Use of drilling fluids
- Drilling and sampling problems
- PID readings

4.5 Well Construction Diagrams

The preparation of well construction diagrams is also the responsibility of field team members assigned to the drilling operations. This topic is further discussed in the SOP for Well Installation, SOP-02. An example well construction form is shown in Attachment 4. The exact format of the diagram is dependent on the job and the client; however, the following basic information should be recorded and/or illustrated on the diagram regardless of the format.

- Project and site name
- Well identification number
- Name of driller and drilling company

- Depth and type of well casing
- Description of well screen and casing
- Borehole diameter
- Any sealing off of water-bearing strata
- Static water level upon completion of the well and after development
- Drilling and installation dates
- Type and amount of annulus materials used; depth measurements of annulus materials
- Other construction details (filter pack type and interval, location of centralizers, etc.)
- Surface elevation and reference elevation of all depth measurements

4.6 Groundwater Sampling and Development Logs

The groundwater sampling and development log should be used any time a well is developed or sampled (Attachment 5). The following information should be recorded on the log.

- Project name and site
- Well identification number
- Equipment decontamination procedures
- The date and time of sampling or development
- The water level and reference elevation
- Volume of water to be purged
- Pertinent well construction information (total depth, well diameter, etc.)
- Measurement of field parameters such as pH, turbidity, conductivity, and temperature, as well as the times at which the readings were taken.
- Type of purging and sampling equipment used
- Type of samples collected
- Sampler's initials

4.7 Aquifer Testing Logs

The aquifer testing team is responsible for setting up, collecting, tracking, and organizing data. The information listed below should normally be included. An example aquifer testing log form is shown in Attachment 6. The Aquifer Testing SOP-04 contains more details and the various book references related to the project site.

- Well number/identification (data logger identification)
- Data logger information/parameter setup
- Water level (include date, time, and measurement reference (such as top of casing)
- Type of aquifer test (slug, step-drawdown, pump test, etc.)
- Slug test (include length and diameter of slug for volume calculations)
- Start time of test
- Duration of test
- Pump tests (include disposal/containment of water information)
- Field observations and problems
- Tester's name

4.8 Documentation of Sampling Activities

Documentation to be made during sampling activities includes sample labels, sample seals, COC records, airbill and identification of courier, and sample register. An example sampling documentation and tracking form is shown in Attachment 7.

4.8.1 Sample Labels

A sample label, written in indelible ink, should be affixed to all soil and water sample containers. Required information on sample labels may vary from job to job; however, the following should be included at a minimum:

- Sample number
- Type of sample (grab or composite)

- Type of preservative, if applicable
- Date and time of collection
- Project location
- Analyte(s)
- Initials of sampling personnel

4.8.2 Custody Seals

Custody seals consist of security tape with the initials of the sampler and the date placed over the lid of each cooler containing samples. The tape should be placed such that the seal must be broken to gain access to the contents. Custody seals should not be placed directly onto the volatile organic compound (VOC) sample bottles. Custody seals should be placed on coolers prior to the sampling team's release to a second or third party (e.g., shipment to the laboratory).

4.8.3 Chain-of-Custody Records

COC procedures allow for the tracing of possession and handling of individual samples from the time of field collection through laboratory analysis. The COC is documented through a record that lists each sample and the individuals responsible for sample collection, shipment, and receipt. A sample is considered in custody if it is any of the following:

- In a person's possession.
- In view after being in physical possession.
- Locked or sealed so that no one can tamper with it after it has been in an individual's physical custody.
- In a secured area, restricted to authorized personnel.

A COC record is used to record the samples taken and the analyses requested. It is the legal record for maintaining accountability of control over the sample. Information recorded includes time and date of sample collection, sample number, and the type of sample, the sampler's signature, the required analysis, and the type of containers and preservatives used. A copy of the COC record should be retained by the sampler prior to release to a second or third party.

Shipping receipts should be signed and filed as evidence of custody transfer between field sampler(s), courier, and laboratory.

The COC record will be properly signed and the date of collection and shipment recorded, along with the sample site identifications and requested analyses for each sample.

4.8.4 Sample Register

The sample register is a field record book with consecutive prenumbered pages. A full description of each sample is recorded in the book. The information included in the sample register should include the following:

- Sample number (identification)
- Duplicate and split sample numbers (identification)
- Location of sample
- Client
- Project number
- Collection method
- Number and size of bottles for each analysis
- Destination of the sample
- Type of analysis
- Date and time of collection
- Name of sampler

Other observations may be included as the situation dictates for a thorough record that could be used to reconstruct the events concerning that sample. All information must be recorded in indelible ink. Mistakes are to be crossed out with one line, dated, and initialed. Skipped pages or blank sections at the end of a page should be crossed out with an “X” covering the entire page or blank section, dated and initialed.

ATTACHMENT 1
TAILGATE SAFETY MEETING FORM

TAILGATE SAFETY MEETING FORM

Date: _____ Time: _____ Job Number: _____

Client: _____

Site Specific Location: _____

Safety Topics Presented

Protective Clothing/Equipment: _____

Chemical Hazards: _____

Physical Hazards: _____

Special Equipment: _____

Other: _____

Emergency Procedures: _____

Hospital: _____ Phone: _____ Ambulance Phone: _____

Hospital Address and Route:

5.0 ATTENDEES

NAME PRINTED	SIGNATURE

Meeting Conducted By: _____ _____
Name Printed Signature

On-Site Safety Officer: _____ Project Manager: _____

Basic Remediation
COMPANY

ATTACHMENT 2

DAILY QUALITY CONTROL REPORT

MONTGOMERY WATSON

DAILY QUALITY CONTROL REPORT

Date: _____

MW PM: _____

Location: _____

Project: _____

Job Number: _____

Contract Number: _____

Report No: _____

Day: _____

Weather: _____

Temp: _____

Wind: _____

Humidity: _____

PERSONNEL ON SITE:

EQUIPMENT ON SITE:

WORK PERFORMED (INCLUDING SAMPLING):

Project: _____ Report No: _____
Job No: _____ Date: _____

QUALITY CONTROL ACTIVITIES (INCLUDING FIELD CALIBRATIONS):

HEALTH AND SAFETY LEVELS AND ACTIVITIES:

PROBLEMS ENCOUNTERED AND CORRECTIVE ACTION TAKEN:

SPECIAL NOTES:

TOMORROW'S EXPECTATIONS:

Prepared by: _____ Title: _____

Distribution:
1. Client Manager
2. Base POC
3. MW Project Manager
4. MW Contract Manager
5. Field Office
6. Project File

ATTACHMENT 3

EXAMPLE BORING/LITHOLOGIC LOG FORM

Site Sketch Map	Boring #: MW#: Sheet 1 of
	Project:
	Job #: Site:
	Logged By: Reviewed By:
	Drilling Contractor:
	Drill Rig Type/Method:
	Drillers Name:
	Borehole Diam./Drill Bit Type: Total Depth / Ref. Elev.
	Sampler Type:
Depth to 1st Water (▽): Time/Date:	Drill Start Time/Date: Drill Finish Time/Date:
Depth to Water After Drilling (▼): Time/Date:	Well Completion Time/Date:
Depth to other Water Bearing Zones:	Soil Boring Backfill Time/Date:

PID/OVA	Sample Interval	Recovered (in.)	Blow Counts / 6 in.	Retained for Analysis	Casing Type & Size	Annulus Filler	Depth (Feet)	USCS Soil Type	Soil Description	Estimated % Of: Gravel	Sand: Coarse	Sand: Medium	Sand: Fine	Silt/clay
							1							
							2							
							3							
							4							
							5							
							6							
							7							
							8							
							9							
							10							
							11							
							12							

QA/QC

Boring #: MW#: Project: Sheet of

PID/OVA	Sample Interval	Recovered (in.)	Blow Counts / 6 in.	Retained for Analysis.	Casing Type & Size	Annulus Filler	Depth (Feet)	USCS Soil Type	Soil Description	Gravel	Estimated % Of Sand: Coarse	Med.	Fine	Silt/Clay
							2							
							3							
							4							
							5							
							6							
							7							
							8							
							9							
							0							
							1							
							2							
							3							
							4							
							5							
							6							
							7							
							8							
							9							
							0							
							1							
							2							

QA/QC

ATTACHMENT 4
EXAMPLE WELL CONSTRUCTION FORM

Well Construction Form

Basic Remediation COMPANY

PROJECT NAME: _____ FIELD PERSON: _____

PROJECT NUMBER: _____ PROJECT MANAGER.: _____

PROJECT LOCATION: _____ DATE: _____

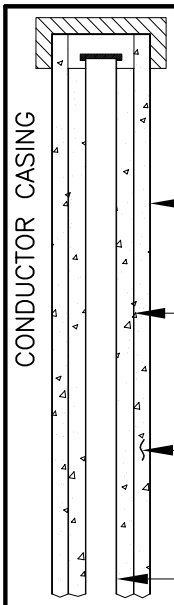

☐ CHRISTY BOX
OR
☐ LOCKING STEEL COVER _____FEET
☐ ABOVE ☐ BELOW GROUND LEVEL

_____ in. DIAMETER BOREHOLE
_____ TO _____ FEET

_____ in. DIAMETER STEEL CONDUCTOR CASING
_____ TO _____ FEET

☐ BENTONITE–CEMENT SEAL
OR
☐ SAND–CEMENT SEAL
_____ TO _____ FEET

(BLANK CASING)

NO SCALE

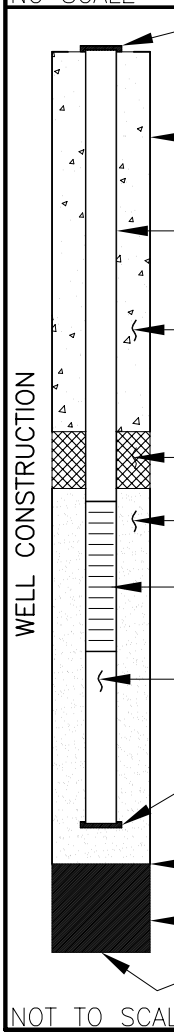

TOP OF CASING AT _____FEET
☐ ABOVE ☐ BELOW GROUND LEVEL

_____ in. DIAMETER BOREHOLE
_____ TO _____ FEET

_____ in. DIAMETER BLANK CASING
_____ TO _____ FEET

☐ BENTONITE–CEMENT SEAL
OR
☐ SAND–CEMENT SEAL
_____ TO _____ FEET

BENTONITE PELLET SEAL
_____ TO _____ FEET

SANDPACK
_____ TO _____ FEET

_____ in. DIAMETER SLOTTED SCREEN
_____ TO _____ FEET

_____ in. DIAMETER BLANK SILT TRAP
_____ TO _____ FEET

BOTTOM WELL CAP
_____ FEET
TYPE_____

HOLE CLEANED OUT TO _____ FEET

BACKFILL MATERIAL
_____

BOTTOM OF BOREHOLE
_____ FEET

NOT TO SCALE

WELL NUMBER: _____

WELL LOCATION: _____

DRILLING COMPANY: _____

DRILLER: _____

DRILLING METHOD: _____

GALLONS OF WATER USED DURING DRILLING: _____

METHOD OF DECONTAMINATION: _____

WATER CONTAINMENT:

☐ GROUND SURFACE ☐ TANK TRUCK
☐ STORM SEWER ☐ STORAGE TANK
☐ DRUM ☐ OTHER: _____

BEFORE DEVELOPMENT:

DEPTH TO WATER: _____ FEET BGS

DATE: _____ TIME: _____

MATERIALS USED:

LENGTH OF _____ IN CONDUCTOR CASING: _____ FEET

LENGTH OF _____ IN SLOTTED SCREEN: _____ FEET

MATERIAL: _____

SLOT SIZE: _____

LENGTH OF _____ IN BLANK CASING: _____ FEET

MATERIAL: _____

NUMBER OF (_____ LB) SACKS OF SAND: _____

SAND NAME/NUMBER: _____

POUNDS OF BENTONITE PELLETS: _____

PELLET SIZE: _____

NUMBER OF (_____ LB) SACKS OF CEMENT: _____

NUMBER OF (_____ LB) SACKS OF POWDERED BENTONITE: _____

AMOUNT OF GROUT: _____ (LBS)

AMOUNT OF REDIMIX CEMENT–SAND ORDERED: _____ (YD^3)

AMOUNT OF REDIMIX CEMENT–SAND USED: _____ (YD^3)

NUMBER OF (_____ LB) SACKS OF REDIMIX USED: _____

CONCRETE PUMP USED: _____

NOTES:

ATTACHMENT 5

MONITORING WELL DEVELOPMENT/SAMPLING FORM

Basic Remediation COMPANY

MONITORING WELL DEVELOPMENT/LOW-FLOW PURGE/SAMPLING FORM

Page __of__

PROJECT: _____

Well ID: _____
Date: _____
Sample ID: _____
Time: _____
Analyses: _____
QA/QC - Dup ID: _____
Rinsate ID: _____
MS/MSD ID: _____

Screened Interval (ft): _____
Pump Intake Depth (ft): _____
Ave. Flow Rate (gpm/Lpm) _____
Purging/Sampling Device: _____
PID Reading at TOC: _____
Water Level Instrument: _____
Water Quality Meter(s): _____

Well Diameter (in) _____
Static Water Level (ft): _____
Total Well Depth (ft): _____
Water Column Length (ft): _____
Minimum Purge Volume: _____
Well Secure - yes/no _____
Samplers Name (Print) : _____

Time	Volume Purged (gal/L)	Flow Rate (gpm/Lpm)	Water Level (feet - TOC)	Specific Conductance ( )	pH	Temp	DO (mg/L)	ORP (mV)	Turbidity (NTU)	Salinity	TDS
			± 0.1 ft	5%	± 0.1	± 1°C	±10%	±10%	±10% or <10 NTU	%	
	Final Field Parameter Measurements										

Comments: _____

ATTACHMENT 6
AQUIFER TESTING FORM

Basic Remediation COMPANY

AQUIFER TEST DATA SHEET (OBSERVATION WELLS)

PROJECT NAME: _____ PROJECT NO: _____ PIEZO NO: _____

DATE: _____ PUMP DEPTH: _____ TEST NO: _____

TYPE OF TEST: _____ PUMPED WELL NO: _____ DISTANCE FROM PUMPING WELL: _____

MEASURING EQUIPMENT: _____ HYDROGEOLOGIST: _____

Time Data	Water Level Data	Time Data Continuation	Water Level Data Continuation
Pump On: Date/Time_____ Pump Off: Date/Time_____ Duration of Aquifer Test: Pumping:_____ Recovery:_____	Pretest Water Level_____ Static Water Level:_____ Measuring Point:_____ Elevation of Measuring Point:_____		

Date	Time	Depth to Water (ft)	Pressure Transducer (XD)	Flow Rate (gpm)	Date	Time	Depth to Water (ft)	Pressure Transducer (XD)	Flow Rate (gpm)

Conversion Factors: 1 PSI = 2.31 feet 1 cubic foot = 7.48 gallons

ATTACHMENT 7

SAMPLING DOCUMENTATION AND TRACKING FORM

Sample Tracking and Documentation Form

Project: _____ **Site:** _____

Location ID	Sample ID	Method	Matrix	Date Sampled	Time Sampled	Date Shipped	Cooler No.	Lab Dest.	Fedex Tracking No.	QA/QC Samples

Field Duplicates:

Splits (LIMS # _____):

Sample Tracking and Documentation Form

Project: _____ **Site:** _____

Location ID	Sample ID	Method	Matrix	Date Sampled	Time Sampled	Date Shipped	Cooler No.	Lab Dest.	Fedex Tracking No.	QA/QC Samples
Equipment Rinsate Blanks:										
Equipment Rinsate Blanks Splits (LIMS #_____):										
Trip Blanks										

QA/QC CODES:

1 = Primary Lab Duplicate
2 = Primary Lab Duplicate and QA Laboratory Split
3 = Primary Lab Rinsate Blank
4 = Primary Lab Rinsate Blank and QA Lab Rinsate Blank Split
5 = Matrix Spike and Duplicate (MS/MSD)

BASIC REMEDIATION COMPANY
STANDARD OPERATING PROCEDURES
BMI COMMON AREAS
CLARK COUNTY, NEVADA

SOP-15

FIELD LOGBOOK

STANDARD OPERATING PROCEDURES

SOP-15
FIELD LOGBOOK

TABLE OF CONTENTS

Section **Page**

1.0 INTRODUCTION 1

2.0 DEFINITIONS 1

3.0 RESPONSIBILITIES 1

4.0 METHODS 1

DISCLAIMER

THE FOLLOWING STANDARD OPERATING PROCEDURE PROVIDES GENERAL GUIDANCE FOR BRC CONTRACTORS FOR TECHNICAL ISSUES ADDRESSED DURING ENVIRONMENTAL SITE INVESTIGATION AND REMEDIATION ACTIVITIES. IT IS NOTED, HOWEVER, THAT EACH SITE IS UNIQUE AND THESE GUIDELINES ARE NOT A SUBSTITUTE FOR COMMON SENSE AND GOOD MANAGEMENT PRACTICES BASED ON PROFESSIONAL TRAINING AND EXPERIENCE. IN ADDITION, INDIVIDUAL CONTRACT TERMS MAY AFFECT THE IMPLEMENTATION OF THIS STANDARD OPERATING PROCEDURE. BRC CONTRACTORS RESERVE THE UNRESTRICTED RIGHT TO CHANGE, MODIFY OR NOT APPLY THESE GUIDELINES IN THEIR SOLE, COMPLETE, AND UNRESTRICTED DISCRETION TO MEET CERTAIN CIRCUMSTANCES, CONTRACTUAL REQUIREMENTS, SITE CONDITIONS, OR JOB REQUIREMENTS.

1.0 INTRODUCTION

The field logbook is a controlled document that contains information about all major on-site activities associated with investigation and remediation projects. The field logbook serves as the primary documentation of all field activities and events. Information recorded in the field logbook is described in Section 4.0, Methods. Site-specific procedures described in project work plans supersede this Standard Operating Procedure (SOP). Some site conditions and/or client requirements may necessitate deviations from this SOP.

The site logbook is initiated at the start of the first on-site activity (e.g., initial reconnaissance survey or site walk). Entries are made each day field activities occur. The site logbook is part of the permanent project file maintained by Basic Remediation Company (BRC) Contractors, and is submitted to the project manager, who sends it to the project file at the completion of field activities. The site logbook may be admitted as evidence in cost recovery or other legal proceedings, so it is critical that this document be properly maintained.

2.0 DEFINITIONS

Field Logbook	The field logbook (also called field notebook) is a bound, waterproof notebook with consecutively numbered pages that cannot be removed.

3.0 RESPONSIBILITIES

Field logbooks are issued to field team members by the field team leader (FTL) or Project Manager. Each field team member in possession of a field logbook is responsible for keeping it current, accurate, straightforward, and relevant (see Section 4.0, Methods), and for submitting the field logbook to the FTL or Project Manager when the field work is completed. The Project Manager or designee reviews the field logbook for completeness, legibility, and relevance at the end of the field effort.

4.0 METHODS

During each field day, all site activities, personnel, visitors, and problems are recorded in the field logbook. The following paragraphs include lists of types of information included, when applicable, and methods for maintaining the field logbook.

The cover of each site logbook contains the following information:

- project name
- client name (BRC)
- BRC Contractors project number
- project manager's name
- applicable work plan (s)
- sequential book number
- start date
- end date

The beginning of each daily entry includes the following:

- date
- day of week
- location
- personal protective equipment (PPE) level
- start time
- weather
- personnel
- subcontractors
- visitors
- equipment
- BRC Contractors job number and cost code for that day's activities

Daily site logbook entries include but are not limited to the following, as applicable:

- arrival and surveying, decontamination, inspection, or other field activity
- equipment calibration
- materials used
- sampling activities and methods
- sample numbers, dates, times, locations, and analyses
- sketches of work locations, sample locations, excavations, etc.
- sketches of well construction details
- sample shipment information (chain-of-custody form numbers, carrier, time)
- start and completion times of each work activity
- storage and disposal of wastes
- field measurements
- health and safety issues (PPE level, time of tailgate safety meeting, etc.)
- unusual events
- accidents and near misses
- work progress
- work problems
- corrective actions
- variations from project plans or standard procedures
- communication with the client or others
- communication with the project manager or other BRC Contractors staff

- references to other project logs (purge, sample, equipment calibration, quality control, photograph, equipment, borehole, construction, development, etc.)

Because the site logbook and its contents are admissible as evidence in legal proceedings, the following guidelines are also important:

- Unnecessary or irrelevant information or opinions are not recorded.
- Language used in the site logbook is always professional.
- Pages are not removed from the site logbook.
- All entries are in waterproof blue or black ink.
- The person entering information signs each page on which information is recorded.
- Blank portions of pages, and pages that have been inadvertently left blank, are crossed out and signed.
- The words “End of Day” and the signature of the person making the entry appear at the end of each daily entry.
- The field logbook is reviewed and signed by the FTL or Project Manager when the field work is completed.

BASIC REMEDIATION COMPANY
STANDARD OPERATING PROCEDURES
BMI COMMON AREAS
CLARK COUNTY, NEVADA

SOP-16

FLUX CHAMBER SOURCE TESTING

STANDARD OPERATING PROCEDURES

SOP-16
FLUX CHAMBER SOURCE TESTING

TABLE OF CONTENTS

Section **Page**

1.0 INTRODUCTION 1

2.0 PROJECT DESCRIPTION 2
- 2.1 USEPA Emission Measurement Technology-Dynamic Flux Chamber 3
- 2.2 Radon Emission Assessment Using a Static Flux Chamber with AC Canisters Technique 5
- 2.3 Analysis of Flux Samples 6
- 2.4 Calculation of Flux Data 6
- 2.5 Calculation of Emission Rate Data 6

3.0 PROJECT ORGANIZATION AND RESPONSIBILITY 7

4.0 QUALITY ASSURANCE OBJECTIVES 7
- 4.1 Precision 11
- 4.2 Accuracy 11
- 4.3 Completeness 12
- 4.4 Representativeness 12
- 4.5 Comparability 12

5.0 AIR SAMPLING PROCEDURES 13
- 5.1 Surface Emission Isolation Flux Chamber Sampling 13
- 5.2 Sampling for VOCs in the Dynamic Flux Chamber 15
- 5.3 Static Flux Chamber Sampling Using a 5-Gallon Bucket 16
- 5.4 Sampling for Radon in the Static Flux Chamber 17

6.0 SAMPLE CUSTODY FORMS 17
- 6.1 Documentation Procedures 18
  - 6.1.1 Field Records 18
  - 6.1.2 Sample Labels 18
  - 6.1.3 Sample Log Book 18
- 6.2 Chain-of-Custody Procedures 18
- 6.3 Shipment 19
- 6.4 Sample Handling Procedures 19
- 6.5 Sample Preservation 20

7.0 CALIBRATION PROCEDURES AND FREQUENCY 20

7.1 Laboratory Instrument Calibration 20
7.2 Sampling Equipment Calibration Procedures 20

8.0 DATA REDUCTION, VALIDATION AND REPORTING 21
8.1 Data Reduction 21
8.2 Data Transfer and Verification 22
8.3 Data Validation 22
8.4 Reporting 23
8.4.1 Investigative Data Reporting 24
8.4.2 General Reporting Procedures 24
8.4.3 QC Data Reporting 24

9.0 ANALTYICAL PROCEDURES AND CALIBRATION 25
9.1 Method Detection Limits 25
9.2 Laboratory Standards and Reagents 25
9.3 Methods of Canister Analysis 26
9.3.1 USEPA Method TO-15 Full Scan Analysis, Canister Sampling Gas Chromatography/Mass Spectroscopy (GC/MS) for VOCs 26
9.3.2 USEPA Method TO-15 SIM, Canister Sampling Gas Chromatography/ Mass Spectroscopy (GC/MS) for VOCs 28
9.4 USEPA Recommended Method for Measuring Radon Gas in Air with AC Canisters 29

10.0 INTERNAL QUALITY CONTROL 30
10.1 Analytical Laboratory Quality Control Samples 30
10.1.1 Calibration Standards 30
10.1.2 Quality Control Check Samples 30
10.1.3 Reagent Blanks 31
10.1.4 Method Spike/Method Spike Duplicates 31
10.1.5 Laboratory Duplicates (Duplicate Analyses) 31
10.2 Field Quality Control Samples 31
10.2.1 Field Duplicate Samples 32
10.2.2 Field Blanks 32

11.0 PERFORMANCE AND SYSTEM AUDITS 32
11.1 Technical Systems Audit 32
11.2 Performance Audits and Data Quality Audits 33

12.0 PREVENTATIVE MAINTENANCE PROCEDURES 34
12.1 Field Equipment/Instruments 34
12.2 Laboratory Instruments 34

13.0 SPECIFIC ROUTINE PROCEDURES USED TO ACCESS DATA PRECISION 34
13.1 Blank Data Assessment 36
13.2 Accuracy 36

13.3 Precision 37
13.4 Completeness 38
13.5 Corrective Action 38

14.0 CORRECTIVE ACTION 38
14.1 Reporting Malfunctions 39
14.2 Quality Assurance Reports to Management 39

15.0 HEALTH AND SAFETY 40

16.0 REFERENCES 41

LIST OF TABLES

Table 1 Sample Matrix and Parameters 8
Table 2 Accuracy, Precision, and Sensitivity of Analysis 9
Table 3 QC Specifications for USEPA TO-15 SIM and Full Scan 9
Table 4 Parameters for Sample Preservation 20
Table 5 Calibration Frequency of Field Sampling Equipment 21
Table 6 Compounds Included in the TO-15 SIM Analysis and Detection Limits 28

LIST OF ATTACHMENTS

Attachment 1 Surface Flux Measurement Data Form
Attachment 2 List of Compounds for TO-15 Full Scan Mode Operation and MDLs
Attachment 3 Summary of Laboratory Quality Control - TO-15 Full Scan and SIM Laboratory Protocols
Attachment 4 Determination of USEPA Method TO-15 Full Scan Mode Reporting Limit Sufficiency
Attachment 5 Summary of Field Quality Control

DISCLAIMER

THE FOLLOWING STANDARD OPERATING PROCEDURE PROVIDES GENERAL GUIDANCE FOR BRC CONTRACTORS FOR TECHNICAL ISSUES ADDRESSED DURING ENVIRONMENTAL SITE INVESTIGATION AND REMEDIATION ACTIVITIES. IT IS NOTED, HOWEVER, THAT EACH SITE IS UNIQUE AND THESE GUIDELINES ARE NOT A SUBSTITUTE FOR COMMON SENSE AND GOOD MANAGEMENT PRACTICES BASED ON PROFESSIONAL TRAINING AND EXPERIENCE. IN ADDITION, INDIVIDUAL CONTRACT TERMS MAY AFFECT THE IMPLEMENTATION OF THIS STANDARD OPERATING PROCEDURE. BRC CONTRACTORS RESERVE THE UNRESTRICTED RIGHT TO CHANGE, MODIFY OR NOT APPLY THESE GUIDELINES IN THEIR SOLE, COMPLETE, AND UNRESTRICTED DISCRETION TO MEET CERTAIN CIRCUMSTANCES, CONTRACTUAL REQUIREMENTS, SITE CONDITIONS, OR JOB REQUIREMENTS.

1.0 INTRODUCTION

This Standard Operating Procedure (SOP) is a guidance document that describes the sampling and analytical methodology prescribed for performing an Air Pathway Analysis (APA). The APA includes using the U.S. Environmental Protection Agency (USEPA) surface emission isolation flux chamber (flux chamber) technology in order to perform an APA at BMI Common Areas site located in Henderson, Nevada and off-site areas of interest. This SOP describes the quality control (QC) and quality assurance (QA) procedures developed to meet the project data quality objectives (DQOs) which are intended to generate a data set that meets the specific project goals and objectives.

Volatile organic compounds (VOCs), specifically chlorinated compounds, have been detected in the groundwater on site. In addition, imported ore that potentially contained radioactive compounds are known to have been used on site. This SOP was prepared for Basic Remediation Company (BRC) with the intent to collect emission data representing potential exposure to VOCs (related to the groundwater contamination) and radon gas (related to the imported ore) via the subsurface air pathway. BRC plans to use the results of the dynamic flux chamber study for VOCs and the static flux chamber study (with activated charcoal [AC] canisters) for radon for risk assessments for current and future land use scenarios. A description of the history, background, and operation of the USEPA-recommended dynamic flux chamber and static flux chamber is provided, along with sampling and analytical protocol, sampling strategies, QC requirements, and sample management protocol. An on-site verification study of the radon assessment technologies, including the static flux chamber with AC canisters, and the USEPA surface emission isolation flux chamber and the PTG-7Rn real time radon detector was conducted in May 2008 (Schmidt 2008). This study concluded that static flux chamber with AC canisters is most useful for the site APA work.

This SOP document is intended to serve as the fundamental technical document under which all sampling and analytical activities as part of the APA are governed. There is no site or area specific sample collection information such as parcel number or location, sample count, sample frequency, sample collection location, rational for sample count, frequency or location information provided in the SOP. Rather, the SOP provides the methodology and QA procedures that will be followed for all APA or site assessment work conducted related to the site. Project, area, or parcel information as described above will be provided in separate Sampling and Analysis Plans (SAPs) as appropriate, and the SAP documents will include: parcel number or location, sample count, sample frequency, sample collection location, rational for sample count,

frequency or location information. Thus, the combined use of this SOP, plus site or sub-area assessments described in the SAPs, will in concert fully describe as site investigation work.

2.0 PROJECT DESCRIPTION

VOCs, specifically chlorinated compounds, have been detected in the groundwater on site. In addition, imported ore that potentially contained radioactive compounds are known to have been part of the effluent disposal. The goal of the APA work for this site is to assess the surface flux of study compounds meeting data collection needs of the multiple site sub-areas on a project schedule meeting overall program needs.

This test protocol is intended to provide area source flux data representative of air emissions of selected VOCs and radon on any properties on or off site. Testing for VOCs will be focused on the 12 sub-areas at the site that range in size from 44 acres to 283 acres. Testing of specific sub-areas will be described in SAPs. Individual test locations will be selected based on meeting a variety of sub-area specific needs and may be: 1) co-located with existing or future groundwater wells, 2) selected to serve as a transect array across groundwater flow patterns, 3) geographically distributed to represent specific sub-areas, or 4) may be selected based on historic land use (effluent disposal patterns in particular). Additional testing may be needed depending on the results of each round of testing, depending on the results of the testing efforts described in each sub-area SAP, and locations tentatively selected for testing may be relocated using more current and relevant groundwater characterization data. If additional test data are needed, a revised SAP will be prepared, submitted for review, and a second round of testing will be conducted after the first round of flux samples are collected and evaluated. Testing off site will include any area or interest in support of the APA, and individual test locations will likewise be selected to meet area-specific project needs.

Compounds found in groundwater are the primary source for potential surface flux of VOCs and it is this source that is the focus of the VOC sample collection strategy. As such, the site groundwater database will be used, as is possible, to select locations for flux chamber testing. In the absence of groundwater data, locations for VOC/flux chamber testing may be selected to spatially represent a given test area.

The potential source for radon emissions is imported ores that were historically part of the effluent disposal. The test locations for radon (static flux chamber with AC canisters) will be based on the soil matrix data and/or groundwater data and these test locations will be identified in the SAP.

2.1 USEPA Emission Measurement Technology-Dynamic Flux Chamber

For this study, assessment of VOCs will be performed using the USEPA recommended surface emission isolation flux chamber (emission flux chamber) and appropriate sample collection/analytical technologies. A schematic diagram of the USEPA emission flux chamber is provided below.

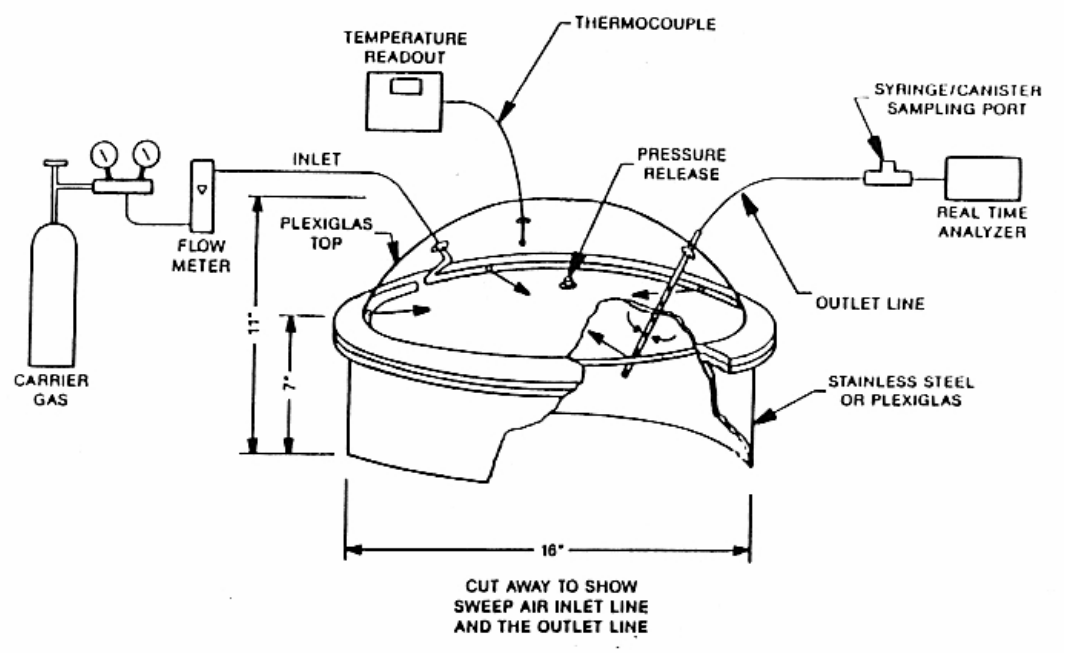

The emission flux chamber is a dynamic environmental chamber designed for operation on land surfaces, but is applicable to sludge and liquid surfaces as well. The chamber qualifies as a mixed tank reactor or a 'continuously stirred tank reactor' (CSTR) and has been designed to assess flux without a significant bias, even for diffusion-limited sources. The chamber is pressure vented and operated at 5.0 liters per minute (L/min; sweep air flow rate) and sample gas is withdrawn from the chamber at equilibrium (5 residence times or 30 minutes; chamber volume is 30 liters and the flow rate of sweep air gas is 5.0 L/min). Because the emission chamber equipment is identical to the USEPA/Environmental Monitoring Systems Laboratory (EMSL) design, and because the protocol for use is followed to exact specifications, the data generated by this technology can be used to quantify area source emission fluxes to within the specifications of accuracy, precision, and repeatability of the published method. All data collected for this research effort, since all data will be collected following the USEPA protocol for dynamic flux chamber testing, will be directly comparable to previously collected flux data by this technology, and will be within the method QA/QC specifications. The comparison to flux data collected using the USEPA flux chamber technology may be useful for project purposes.

Samples are collected from the USEPA flux chamber at equilibrium using appropriate and valid sample collection and analytical methodology. The analytical methods, combined with the field QC testing (minimum amount of field system blank tests and replicate sample tests) will be adequate to demonstrate compliance with method performance.

Several studies have been conducted using the USEPA emission flux chamber at sites with subsurface soil gas sources, and the technology is highly applicable to this type of land application (e.g., diffusive flow subsurface VOC source). The strengths of the flux chamber technology for this application are:

1. The air emissions from a given sub-area measured using flux chambers are unaffected by upwind sources including other sub-areas or upwind sources;
2. The sensitivity VOCs is less than 0.02 $\mu g/m^2\text{-}min^{-1}$ for TO-15 VOC full scan analysis (0.1 parts per billion by volume [ppbv] method detection limit [MDL]) and less than 0.002 $\mu g/m^2\text{-}min^{-1}$ VOC for TO-15 selective ion mode (SIM) analysis for a short list of compounds (0.01 ppbv MDL).;
3. Other flux chamber studies have been conducted for sites with groundwater sources, and all flux data collected from a given sub-areas by this technology will be directly comparable to the data collected on other sub-areas and other sites;
4. All data collected will be of known accuracy and precision;
5. The technology is a direct measurement approach and no modeling is required to obtain emission factor information since data are reported in engineering units, for example: mass per time/surface area, which can be used to estimate process specific emissions if the overall surface area is known.
6. The USEPA technology, using the USEPA/EMSL User's Guide (available on *ceschmidt.com* website) and specified equipment, is a verified approach producing data that can be used to estimate emissions from a process by knowing the surface area and measured flux of the test source.

Thus, the strength of this approach is that it provides accurate and specific flux data from a given test location that can meet the project objectives. Unfortunately, this strength can also be a weakness, since the exact areas tested must be carefully selected so that they represent the sub-area specific fugitive emissions. Therefore, proper planning is needed prior to testing including the selection of representative test locations. Test locations will be recommended and rationale for selection will be provided in each sub-area SAP.

2.2 Radon Emission Assessment Using a Static Flux Chamber with AC Canisters Technique

The static flux chamber with AC canisters technique can be used to assess radon flux for site assessment purposes. Static chamber techniques do not use a sweep air like a dynamic chamber. In this case, radon flux is assessed in a static chamber by using an AC canister sealed in a chamber over a 48-hour time-period or duration of exposure, to assess radon flux.

The AC canister has historically been the analytical method of choice for assessing radon gas concentration in confined areas, non-ventilated structures, and environmental chambers. The reason for this is that the AC canisters are very sensitive (0.1 pCi/L or 100 pCi/m^3), easy to use, and are very inexpensive. This technique was designed for testing in structures such as basements. The AC canisters are prepared for testing by removing the adhesive covering on the active face of the canister, placing the AC canister in the room where radon gas can be absorbed on to the device over time, and then collecting the canisters post sampling interval (typically 48-hours). The exposure period for the duration of the sample collection is used to estimate the time-constant in the calculation of radon flux over the sample collection interval. Static chamber assessment works best when the sample collection approach used is passive sample collection, since active chamber gas is not removed during the sample collection time period, and no adverse pressure gradients or sample dilution effects are experienced. As such, the static chamber technique exactly replicates the indoor room 'head space' assessment which is what the technique was designed to test (indoor air concentration).

The static headspace technique, as described by the USEPA in Volume II of the area source assessment technical guidance series, is an environmental assessment technique intended to determine the volatilization potential of a surface or material. Static chambers are designed for operation on land surfaces, but are applicable to sludge and liquid surfaces as well. A static chamber does not qualify as a mixed tank reactor, but in this application, it emulates a closed room or crawl space. When used with passive sample collection, assessment of study compounds can be made without a significant sample collection bias, even for diffusion-limited sources. The chamber is not vented, it is sealed to the ground, and light shielded to avoid unnecessary solar heating. The chamber is weighted-down to prevent disturbance by wind, left for a time period of about 48-hours, and samples are collected after the sampling interval and shipped off site for analysis.

The detection limit of the radon AC canister sorption method is about 0.1 picoCurie/liter (pCi/L), resulting in a radon surface flux of 0.12 pCi/m^2-min in the static chamber technique.

2.3 Analysis of Flux Samples

Many compounds have been identified for analysis, and sample analysis will be completed for both full scan species analysis for VOCs, low level detection for specific VOCs by SIM analysis, and radon gas.

The QA program will include strict adherence to sampling and analytical procedure, QC procedures, and project plan specifications. Blank, replicate field, and laboratory QC samples will be collected and analyzed at a frequency of at least five percent as described in the SAPs. All QA procedures will focus on insuring and assessing the quality of program data.

2.4 Calculation of Flux Data

The compound-specific VOC flux in the dynamic flux chamber will be calculated using the laboratory data for compound concentration in the flux chamber Summa canister ($\mu g/m^3$), the sweep air inflow rate (0.005 m^3/min), and the surface area of the chamber (0.13 m^2). The calculation result gives a direct measure of the flux rate of compounds ($\mu g/m^2$-min) from a given surface.

$$(\mu g/m^3)(0.005\ m^3/min)/(0.13\ m^2) = \text{VOC Flux } (\mu g/m^2\text{-min}) \qquad \text{Eqn. 2-1}$$

The radon flux in the static flux chamber with AC canisters will be calculated using the laboratory data for compound concentration in the AC canister (pCi/L), the chamber volume (5 gallons or 21.8 L), the time duration of exposure planned for 48 hours (2,880 min), and the surface area of the chamber (0.0613 m^2). The calculation result gives a direct measure of the flux rate of compounds (pCi/m^2-min) from a given surface.

$$(pCi/L)(21.8\ L)/(2{,}880\ min)(0.0613\ m^2) = \text{Radon Flux } (pCi/m^2\text{-min}) \qquad \text{Eqn. 2-2}$$

2.5 Calculation of Emission Rate Data

The emission rate of compounds from a land surface area will be calculated using the flux data ($\mu g/m^2$-min; pCi/m^2-min) and the surface area of the area source tested (m^2). The emission rate of compounds from a given sub-area can be estimated by summing the emission rate (per compound) from each specific location of the sub-area.

3.0 PROJECT ORGANIZATION AND RESPONSIBILITY

The organization for the program includes overall project management by BRC and subcontract by Dr. CE Schmidt as contractor to the BRC. Environmental Analytical Service in San Luis Obispo, CA (for TO-15 VOC SIM and full scan analyses), and Radon Testing Laboratory of America in Elmsford, NY (for radon analyses) will provide laboratory services. The subcontractor to CE Schmidt for field testing is Katie Schmidt or other.

The field sampling and analytical activities are the responsibility of Dr. CE Schmidt. Dr. Schmidt will: arrange for the field sampling, coordinate with key personnel at BRC, coordinate with the subcontract laboratories for analytical services, conduct the field sampling, ship samples for analysis, receive and review laboratory data, and report (Technical Memorandum) the results of the field sampling to BRC. Contact information is provided below:

Contact	Address	Phone/Fax	Email
Ranajit Sahu	Basic Remediation Co. 875 W. Warm Springs Henderson, NV 89011	P (702) 567-0465 F (702) 567-0475	sahuron@earthlink.net
Mark Jones	ERM 2525 Natomas Park Dr., Ste 350 Sacramento, CA 95833	P (916) 924-9378 F (916) 920-9378	mark.jones@erm.com
CE Schmidt	19200 Live Oak Road Red Bluff, CA 96080	P (530) 529-4256 F (530) 529-4878	schmidtce@aol.com
Steve Hoyt	EAS 173 Cross Street San Luis Obispo, CA 93401	P (805) 781-3585 F (805) 541-4550	stevehoyt@easlab.com
Nancy Bredhoff	Radon Testing Corp of America 2 Hayes Street Elmsford, NY 10523	P (914) 345-3380 F (914) 345-8546	rtca.com

4.0 QUALITY ASSURANCE OBJECTIVES

The purpose of a QA/QC program is to produce data of known quality that satisfy the project objectives set forth in this document. The QA/QC program shall:

- Provide a mechanism for ongoing control and evaluation of measurement data quality
- Provide an estimate of data quality in terms of accuracy, precision, completeness, representativeness, and comparability for use in data interpretation

Two VOC methods have been selected for this study; USEPA Method TO-15 for 20 study compounds with ultra low method detection limits (gas chromatography with mass spectroscopy detection operated in SIM), and USEPA Method TO-15 for a full list of compounds with low method detection limits (gas chromatography with mass spectroscopy detection operated in the full scan mode).

The DQO level and laboratory contact information is provide in Table 1, and the QA objectives for accuracy and precision are presented by sample matrix for all sampling and analytical parameters in Table 2. These values are estimates of the degree of uncertainty that is considered acceptable in order for the data to fulfill the needs of the program area source testing. The QA/QC program focuses on controlling and quantifying measurement error within these limits, and provides a basis for understanding the uncertainty associated with these data. In the first step of data validation, measurement data are compared to the QA objectives to determine whether gross performance problems occurred.

Table 1. Sample Matrix and Parameters

Parameter	Method	Instrument or Laboratory	DQO Level
20 target compounds	USEPA Method TO-15 Selective Ion Mode (SIM) Analysis	EAS 173 Cross Street San Luis Obispo, Ca 93401 (805) 781-3585	4
70 target compounds	USEPA Method TO-15 (Full Scan Mode-edited list)	EAS 173 Cross Street San Luis Obispo, Ca 93401 (805) 781-3585	4
Radon gas	Methods for measuring radon in air	Radon Testing Corp of America 2 Hayes Street Elmsford, NY 10523 (914) 345-3380	4

Table 2. Accuracy, Precision, and Sensitivity of Analysis

Parameter	Method	Accuracy	Precision	Sensitivity
TO-15 VOCs SIM	GC/MS	+30% Multi-Component Standard	±30%	0.01 ppbv
TO-15 VOCs Full Scan	GC/MS	+30% Multi-Component Standard	+30%	0.1 ppbv
Radon	Gamma Count	+30% -Standard	+30%	100 pCi/m3

The basis for assessing precision, accuracy, completeness, representativeness, and comparability is discussed in the following subsections. Specific calculations for data quality measurements are presented in Section 13. VOC method QC specifications are provided in Table 3.

Table 3. QC Specifications for USEPA TO-15 SIM and TO-15 Full Scan

Parameter	EAS	Comments
Instrumentation	GC with FPD and all Teflon Concentrator	USEPA 15 GC/FPD ASTM D-5504M Sievers Detector
Initial Calibration	3 points minimum **Single injections** Span range of 0.5 to 10.0 ppmv based on 1 ml inj.	Method calls for 3 replicate injections with RSD < 5%
Calibration Check Sample (CCS)	After Initial Calibration **< 30% RSD**	The CCV is run as an LCS
Continuing Calibration Verification (CCV)	Daily (24 hours) **< 30% RSD** Ending Calibration Std to check for drift **< 30% RSD** (Carb 15 only)	The method does not specify a CCV Method specifies a triplicate ending standard <5% of beginning triplicate
Method Blank	No target analytes above 3xMDL	
Laboratory Control Spike	1 per Daily Batch 70-130% recovery	No QC specified in method other than replicate standard analysis
Matrix Spike(5)	1 per Daily Batch if Requested 70-130% recovery	There is an extra charge for matrix spike
Duplicate (One of below) Lab Control Dup Sample Matrix Spike Dup	1 duplicate with each 20 samples <30% RSD	Only one duplicate is done in each DAB. This is usually an LCD

Table 3. QC Specifications for USEPA TO-15 SIM and TO-15 Full Scan

Parameter	EAS	Comments
Holding Times	72 hours in Tedlar bag, and 7 days in Silio canister, from sampling date	
Silico can Certification	Certification by TO-14	Certification can be done by USEPA 15 if requested
Field Duplicates	50% concentrations over 1 ppbv	

DQOs are qualitative and quantitative statements, which specify the quality of the data to satisfy the end uses of the data to be collected. As such, different data uses may require different levels of data quality. There are five analytical levels, which address various data uses, and the methods required to achieve the desired level of quality. These levels are:

- Screening (DQO Level 1): This provides the lowest data quality but the most rapid results. It is often used for health and safety monitoring at the site, preliminary comparison to local regulations or criteria, initial site characterization to locate areas for subsequent and more accurate analyses, and for engineering screening of alternatives. These types of data include those generated on-site (field analysis) through the use of real-time monitoring equipment at the site like the Organic Vapor Analyzer (OVA).

- Field Analyses (DQO Level 2): This provides rapid results and better quality than in Level 1. This level may include mobile lab generated data depending on the level of QC exercised.

- Engineering (DQO Level 3): This provides an intermediate level of data quality and is used for site characterization. Engineering analyses may include mobile lab generated data and some analytical lab methods (e.g., laboratory data with quick turnaround used for screening but without full QC documentation).

- Conformational (DQO Level 4): This provides the highest level of data quality and is used for purposes of risk assessment, and evaluation of remedial alternatives. These analyses require full Contract Laboratory Program (CLP) analytical and data validation procedures in accordance with USEPA recognized protocol.

- Non-Standard (DQO Level 5): This refers to analyses by non-standard protocols, for example, when exacting detection limits or analysis of an unusual chemical compound is required. These analyses often require method development or adaptation. The level of QC is usually similar to DQO Level 4 data.

The data collected for the APA includes Level 3 engineering data using the static flux chamber with AC canisters sample collection, and Level 4 detailed data for USEPA flux chamber and

VOC/radon off-site (fixed laboratory) analysis. The laboratory will perform under DQO Level 4 analysis, however, will not be asked to prepare or submit a CLP type data package. These back-up data will be archived and available upon request.

4.1 Precision

Precision measures the reproducibility of repetitive measurements. It is strictly defined as the degree of mutual agreement among independent measurements as the result of repeated application of the same process under similar conditions. Analytical precision (estimated at 30 percent) is a measurement of the variability associated with duplicate (two) or replicate (more than two) analyses of the same sample in the laboratory. Total precision is a measurement of the variability associated with the entire sampling and analysis process. It is determined by analysis of duplicate or replicate field samples, and incorporates the variability caused by matrix variability, field sampling procedures, and analytical variability. The results of total and analytical precision must be interpreted by taking into consideration all possible sources of variability. Duplicate samples will be analyzed to assess field and laboratory precision, and the results will be reported as the relative percent difference (RPD) between duplicate measurements. In all cases, field precision objectives for RPD will be less than 50 percent. Analytical precision objectives are presented for each method and matrix in Table 2.

4.2 Accuracy

Accuracy is a statistical measurement of correctness, and includes components of random error (variability due to imprecision) and systematic error (bias). As such, it reflects the total error associated with a measurement. A measurement is accurate when the value reported does not differ from the true value, or known concentration, of the spike or standard. Analytical accuracy is typically measured by determining the percent recovery of known target analytes that are spiked at known concentrations into a field sample (a matrix spike) or reagent water (a method spike) before extraction at known concentrations. The stated accuracy limits apply to spiking levels at five times the MDL or higher. The individual methods provide equations for acceptance criteria at lower spiking levels.

Surrogate compound recovery is also reported and is used to assess method performance for each sample analyzed for volatile compounds. Sampling accuracy is assessed by evaluating results for field and trip blanks.

Both accuracy and precision are calculated for specific sampling or analytical batches, and the associated sample results must be interpreted considering these specific measures. Application of calculated precision and accuracy to measurement sample results will be discussed in Section 13. An additional consideration in applying accuracy and precision is the concentration level of the samples; a procedure capable of producing the same value within 50 percent would be considered precise for low-level (near the detection limit) analyses of minor constituents, but would be unacceptable, and possibly useless, for major constituents at high concentrations.

4.3 Completeness

Completeness, also referred to as percent data capture, is defined as the percentage of valid data reported compared to the total number of samples collected for analysis. Valid data are determined during the data assessment process and satisfy the QA objectives. Completeness is determined after precision and accuracy are calculated. The objective for completeness for all measurement parameters and all sample matrices is 90 percent.

4.4 Representativeness

Objectives for representativeness will be defined for each sampling and analysis task and will be a function of the investigative objectives. Representativeness will be achieved through use of the standard sampling and analytical procedures described in this SOP and the frequency of testing as described in Section 5. Adequate representativeness will be evaluated and documented and will consider source and exposure information, area-specific results, data distribution, analyte toxicity, and human receptor locations.

4.5 Comparability

Comparability is the confidence with which one data set can be compared to another. The objectives for this QA/QC program are to produce data with the greatest degree of comparability possible. The number of matrices sampled and the range of field conditions encountered must be considered in ultimately determining comparability. Comparability will be achieved by using the same (standard) methods for sampling and analysis, reporting data in standard units, and using standard and comprehensive reporting formats. Analysis of reference samples may also be used to provide additional information that can be used to assess comparability of analytical data produced within the program.

5.0 AIR SAMPLING PROCEDURES

This section contains detailed descriptions of the sample collection protocols to be used for field sampling. All field personnel will be familiar with the procedures they will be using and will have a copy of the SOP available for reference.

The following subsections describe two distinct types of flux chamber testing with VOC and radon air sampling as is appropriate for the chamber technology:

5.1 Dynamic Flux Chamber Sampling using the USEPA Surface Flux Chamber Technology

5.2 Sampling for VOCs in the Dynamic Flux Chamber

5.3 Static Flux Chamber Sampling Using a 5-Gallon Bucket

5.4 Sampling for Radon in the Static Flux Chamber

5.1 Surface Emission Isolation Flux Chamber Sampling

Isolation emission flux chamber sampling is a dynamic direct measurement of emission rates of air contaminants. Flux chambers can be used for measuring source emissions from:

- Liquid surface, quiescent or agitated;
- Solid land surfaces or sludge surfaces;
- Open ports in processes; and
- Cracks or vents in a process or landfill cover.

Flux measurements will be conducted on solid (soil). All flux chamber measurements will be conducted as per the USEPA guidance document, *Measurement of Gaseous Emission Rates from Land Surfaces Using an Emission Isolation Flux Chamber*, February 1986. All solid surface testing will be conducted by placing the chamber directly on the solid surfaces. The method is briefly described below.

The enclosure device, referred to as the flux chamber, is used to sample gaseous emissions from a defined surface area. Clean, dry sweep air is added to the chamber at a fixed, controlled rate. The chamber temperature and volumetric flow rate of air through the chamber is recorded and the concentration of the species of interest is measured at the exhaust of the chamber. The emission rate is calculated as:

$$ER_i = \frac{(C_i)(Q)}{A} \qquad \text{Eqn. 5-1}$$

where:

ER_i = Emission rate of species i (µg/m^2-min^{-1}, pCi/m^2-min^{-1})
C_i = Measured concentration of species i (µg/m^3, pCi/m^3)
Q = Air flow rate (L/min)
A = Exposed Surface Area (m^2)

The response time of the flux chamber is characterized by the residence time. The chamber reside time (t) is a function of chamber volume (V) and air flow rate (Q). The quotient of volume and flow rate (V/Q = t) is the theoretical residence time. Four to five residence times are normally needed to establish steady-state conditions in the chamber at which time representative sampling can occur. This will require 24 to 30 minutes per sampling point.

The chamber is an acrylic topped, stainless steel cylinder designed to penetrate the sampling surface. The chamber has a 0.13 m^2 exposed surface area and a volume of approximately 0.03 m^3. One 1/4 inch port will be used to withdraw sample gas.

Dry, hydrocarbon-free sweep air (zero grade air) will be provided from compressed gas cylinders. The sweep air will pass through a calibrated rotometer with a needle-valve flow control. Inlet and outlet lines are made of Teflon and all fittings in contact with the gas will be Teflon or stainless steel. The outlet line will include a sampling manifold for monitoring and/or collection of the gaseous specie of interest. This manifold will consist of ports for gas-canister sampling and gas-syringe collection. A thermocouple and readout will be used (when possible) to measure the surface and air temperatures at the sample point.

The flux chamber will be wiped clean and dried before each use and then placed over the sampling area. The sweep air is added at a flow rate of 5.0 L/min and the time noted when the chamber is placed on the test surface. Samples for VOCs will be collected using evacuated stainless steel canisters.

Data will be recorded on the data form shown in Attachment 1. The following data collection steps will be taken:

- Locate equipment at the sampling location;
- Document location of measurement, date, time, and operator;

- Initiate sampling by starting sweep air, checking the flow rate, and placing the chamber on the testing location;
- Document the gas flow rate and the initial and final temperatures of ambient air, of air inside the chamber, and of the bulk soil/waste;
- Document any other data such as waste characteristics, meteorological conditions, etc., for possible correlations with emission rate measurements;
- Collect gas samples at steady state indicated by time readings; and
- Fill out appropriate chain-of-custody forms and master sample log entries for sample collected.

5.2 Sampling for VOCs in the Dynamic Flux Chamber

Samples will be collected as grab samples in evacuated canisters for VOCs. Evacuated, summa-polished canisters will be used to collect exhaust gas grab samples for VOC analyses under ambient or near-ambient conditions from the flux chamber. Canisters will be used in the vacuum mode; that is, the vacuum in the clean canisters will be used to pull a sample of gas into the container. The sampling rate will be maintained by opening the valve to the canister, listening to the filling of the canister and filling the canister over a time period to provide a sample collection rate that does not exceed 2 L/min. Note that locations for sample analysis by TO-15 full scan and TO-15 SIM will be identified in the SAP, as will the criteria for selection for those locations analyzed by TO-15 full scan and TO-15 SIM.

<u>Grab Sampling</u>

Grab samples will be collected in evacuated, summa-polished 6-liter canisters. The canister will be used to collect exhaust gas samples for VOC analyses using USEPA Method TO-15 full scan and TO-15 SIM. Both TO-15 full scan and TO-15 SIM analyses will be conducted from the same canister; not all canister will be analyzed for both full scan and SIM. Methods of analysis will be identified in each specific SAP. Canisters will be used in the vacuum mode; that is, the vacuum in the clean canisters will be used to pull a sample of gas into the container.

Prior to sample collection, each canister will be cleaned and evacuated in the laboratory, and the absolute pressure will be recorded.

To collect canister samples from the flux chamber:

- The canister pressure (vacuum) is checked prior to sampling and recorded. The initial pressure should be between -30 and -27 inches of mercury. However, the canister will be considered acceptable (useable) if the value is >-24 inches of mercury;

- Attach sampling line from the to flux chamber to the canister using a clean, 1/4 inch Teflon or stainless steel tube with 1/4 inch Swagelok fittings;

- Record start time on data sheet and open canister inlet valve slowly. A slight hissing sound can be heard during sampling by placing an ear against the canister;

- The canister grab samples will be collected over a 3 minute period. Sample time is controlled by slowly opening the inlet valve so that the hissing sound is barely audible or the vacuum gauge begins to drop. A stopwatch or watch with a second hand should be used;

- After sample collection is completed, the canister inlet valves are closed and the sample line is disconnected from the canister;

- The absolute canister pressure is again measured and recorded on the data sheet and the canister chain-of-custody form;

- Prior to transporting to the laboratory, all canister valves are tightened and stem nuts sealed with Swagelok plugs;

- Complete appropriate chain-of-custody forms, master sample log entries, and canister tags for samples collected, and ship canisters.

5.3 Static Flux Chamber Sampling Using a 5-Gallon Bucket

The assessment of radon gas may be performed using a static chamber method. Static chamber sampling for radon offers the advantage of low MDL detection (0.1 pCi/L) using the AC canister sample collection approach. This passive sorbent technology, originally intended to be placed in a basement or room where radon gas can be absorbed on to the device over time, provides for an assessment of the radon gas concentration collected in the static chamber (5-gallon bucket) over the exposure period for the duration of the sample collection taken to be 48-hours. Static chamber assessment works best when the sample collection approach used is passive sample collection (such as the radon method), since active chamber gas is not removed during the sample collection time period, and no adverse pressure gradients or sample dilution effects are experienced. As such, the static chamber technique exactly replicates the indoor room ‘head space’ assessment that the ambient air radon detection technique was intended for.

The static headspace chamber emulates a closed room or crawl space. When used with passive sample collection, assessment of study compounds can be made without a significant sample

collection bias, even for diffusion-limited sources. The chamber is not vented (5-gallon plastic bucket with a volume of 21.8 L, a diameter of 11.5 inches, and a surface area of 0.0613 m^2), it is sealed to the ground, and light shielded to avoid unnecessary solar heating. The chamber is weighted to prevent disturbance by wind, left for a time period of about 48-hours (approx. 2,880 minutes), and samples are collected after the sampling interval and shipped off site for analysis.

The detection limit of the radon sorption method in the static chamber with an exposure period of 48 hours is about 0.1 pCi/L (100 pCi/m^3), resulting in a surface flux of 0.020 pCi/m^2-min as calculated below:

$$(0.1\ \text{pCi/m}^3)(21.8\ \text{L})/(2{,}880\ \text{min})(0.0613\ \text{m}^2) = 0.12\ \text{pCi/m}^2\text{-min}$$

5.4 Sampling for Radon in the Static Flux Chamber

Radon samples will be collected as approximately 48-hour integrated samples. The sampling media is a passive dosimeter, and activated charcoal is located inside the canister which is accessed through a ventilated surface of the canister. The AC canisters come sealed from the manufacture (Radon Testing Lab of America) with an adhesive cover over the ventilated face of the canister filled with activated charcoal. A three-part sticker is located on the other side of the canister that has two, tear-off sections- each of which is labeled with identical bar codes. One bar code is to be fixed on the chain-of-custody form; the other is to be fixed on the sample data sheet. After documentation, 1) the AC canister is fixed to the bottom of the 5-gallon bucket (active, ventilated portion exposed to the interior of the bucket), 2) invert the bucket (static chamber) on the test surface, 3) seal the bucket to the test surface, and 4) weight the bucket with a flat brick. Leave the static chamber sealed and in place for approximately 48 hours, then remove the AC canister from the bucket, seal the ventilated face of the canister with the adhesive cover provided by the lab, record the end of the sampling interval, and re-box the canisters for shipping to the laboratory.

6.0 SAMPLE CUSTODY FORMS

Sample possession during all testing efforts must be traceable from the time of collection until the results are verified and reported. Sample custody procedures provide a mechanism for documentation of all information related to sample collection and handling to achieve this objective.

Dr. Schmidt will be responsible for seeing that the field team adheres to proper custody and documentation procedures for all sampling operations. Preformatted field data and Chain-of-Custody forms will be used as the primary documentation mechanism to ensure that information pertaining to each sample is properly recorded. In addition, a master sample logbook will be maintained for all samples collected. Examples of these data documentation forms are presented in this section. Copies of the Chain-of-Custody forms and the field logs will be retained in the project file.

6.1 Documentation Procedures

6.1.1 Field Records

Field personnel will be required to keep accurate written records of their daily activities in a bound logbook. All entries will be legible, written in waterproof ink, and contain accurate and inclusive documentation of an individual's field activities, including field data and observations, any problems encountered, and actions taken to solve the problem. The type of data recorded in the field logbook includes field measurements, ambient conditions, and any other information pertinent to sample collection. Entry errors or changes will be crossed out with a single line, dated, and initialed by the person making the correction. Entries made by individuals other than the person to whom the logbook was assigned will be dated and signed by the individual making the entry. Field logbooks will be available for review by interested parties.

6.1.2 Sample Labels

Each sample collected will receive a sample label that identifies the sample by a unique sample identification number. These labels are affixed to the sample container prior to sample collection.

6.1.3 Sample Log Book

A sample master log will be maintained for all samples collected. Each sample will be assigned a unique identification number; a full description of the sample, its origin, and disposition will be included in the log entry.

6.2 Chain-of-Custody Procedures

After the samples are collected and documented in the master logbook, a Chain-of-Custody form will be completed and will accompany the samples to the laboratory. A Chain-of-Custody form

is used for sample types. Team members collecting the samples are responsible for the care and custody of the samples until they are transferred or dispatched to the appropriate laboratory. When transferring samples, the individuals relinquishing and receiving the samples will sign, date, and note the time on the record.

This record documents sample possession from collection to the laboratory sample control center. When the samples are received by the laboratory, the sample control officer will verify the Chain-of-Custody form against the samples received. If any discrepancies are observed, they will be recorded on the Chain-of-Custody form and Dr. Schmidt will be notified to correct the problem.

6.3 Shipment

All sample shipments will be accompanied by the Chain-of-Custody record, which identifies the contents of each crate. The person relinquishing the samples to the laboratory will request the signature of a laboratory representative to acknowledge receipt of the samples. Sample collection and shipment will be coordinated to ensure that the receiving laboratory has staff available to process the samples according to method specifications.

All shipping containers will be secured for safe transportation to the laboratory. The method of shipment, courier name(s), and other pertinent information is entered in the “Remarks” section when the samples are to be shipped (i.e., FedEx, Express Mail, etc.) instead of hand-delivered.

6.4 Sample Handling Procedures

The objective of sample handling procedures is to ensure that samples arrive at the laboratory intact, at the proper temperature, and free of external contamination. VOC canister samples will be shipped via Federal Express to EAS in San Luis Obispo, CA. The AC canisters will be shipped to the Radon Testing Lab of America via Federal Express to Elmsford, NY.

Sample packaging requirements for hazardous materials requiring interstate transport are defined in the Code of Federal Regulations 40 (CFR) 49, Chapter 1, Part 171. These requirements outline in detail the proper classification and transportation procedures for hazardous materials that will be used in the transporting of samples.

6.5 Sample Preservation

Once the samples have been collected, the methods specify preservation, storage requirements and holding time limitations. Table 4 summarizes the preservation requirements for the type of samples collected during this program.

Table 4. Parameters for Sample Preservation

Parameter	Preservation and Storage Requirements	Maximum Holding Time (Days)
6-Liter Summa Polished Stainless Steel Canisters for VOCs	Cool storage area; avoid direct sunlight when/if possible. Wrap valves; ship in cardboard.	14 Days
AC Canisters	Seal the ventilated face, store in cardboard, and ship to the lab.	10 Days

7.0 CALIBRATION PROCEDURES AND FREQUENCY

Information is presented in this section pertaining to the laboratory calibration of sampling equipment. Included are descriptions of each procedure or references to applicable SOPs, the frequency of calibrations, and the calibration standards to be used.

7.1 Laboratory Instrument Calibration

Laboratory instruments are calibrated according to manufacturer's specifications and are in compliance with the analytical method requirements. Detailed calibration procedures and recommended frequencies are included along with the analytical SOPs, which can be found in the appendix to this volume. A brief description of the analytical methodologies, and their associated calibration procedures, is included in Section 9.

7.2 Sampling Equipment Calibration Procedures

An important function in maintaining data quality is the check-out and calibration of all sampling equipment. Using referenced procedures, the equipment will be calibrated prior to field sampling. These results will be properly documented and retained. If a referenced calibration technique for a particular piece of apparatus is not available, then state-of-the-art techniques are used. A discussion of the procedures used to calibrate equipment is presented below. Calibration frequency of the field sampling equipment is presented in Table 5.

Table 5. Calibration Frequency of Field Sampling Equipment

Sampling Equipment	Calibration Before Sampling	Frequency	
		Annual	Project Needs
Rotometer	X	X	X

Rotometers used be to control the flow rate of sweep air gas into the flux chamber. Rotometers will be calibrated using a primary gas flow standard (DC Lite—frictionless piston device) generating a multipoint (minimum of three points up to 5 L/min) calibration curve. The calibration will be performed prior to the testing event and the calibration curve data will be available on request. Note that only pure, dry air is delivered through the rotometers.

8.0 DATA REDUCTION, VALIDATION AND REPORTING

The data reduction, validation, and reporting procedures described in this section will ensure that complete documentation is maintained throughout the program, that transcription and data reduction errors are minimized, that the quality of the data is reviewed and documented, and that the reported results are properly qualified and in a conventional format.

8.1 Data Reduction

The reduction of raw data generated at the laboratory bench is the responsibility of the analyst producing it. The data interpretation that is required to calculate sample concentrations follows the methodology described in the specific analytical SOP. After all analyses have been completed, a preliminary laboratory report is generated for review by the laboratory supervisors who verify that the analyses were properly performed and interpreted. After the final review by the laboratory supervisor, the raw data is transferred to sample control and presented for review by the QA coordinator. Raw data, together with all supporting documentation, are stored permanently in confidential files by sample control.

The QA coordinator reviews the data for adherence to the QC method limits. In addition, the data are reviewed for the presence of outliers. An outlier is an unusually large (or small) value in a set of observations. There are many possible reasons for outliers, among which are:

- Faulty instruments or component parts
- Inaccurate reading of a record, dialing error, etc.
- Errors in transcribing data
- Calculation errors

Sometimes analysts or operators can identify outliers by noting the above types of occurrences when they record observations. In these instances, the errors are corrected, or if correction is not possible the suspect observations may be removed from the data before calculations are performed. If no such information exists, the Dixon Criteria are used to test suspected outliers at the five percent significance level if there are three or more points in the data set containing the outlier. Outliers identified by this method may be removed from the data before further processing (see W.J. Dixon, "Processing Data for Outliers," Biometrics, 1953, Vol. 9, No. 1, pp. 74-89).

8.2 Data Transfer and Verification

A laboratory database is used to store and transfer analytical data from the laboratory. Sample control staff is responsible for entering into the system and verifying sample and result information and generating hard copies of the analytical results.

8.3 Data Validation

Dr. Schmidt will review field documentation and all measurement data for acceptable sample collection and analysis procedures, consistency with expected results or other results, adherence to prescribed QA procedures, and agreement with the acceptance criteria described in Section 4.

Initially, the reviewer will determine whether hold times were met and that all required analytical QC checks were reported with the data. Then, all QC sample results will be reviewed to evaluate the sampling and analytical performance. Reagent blank results will be evaluated to identify any systematic contamination; spike and duplicate results will be compared to the QA objectives presented in Section 4, and the results will be used to calculate precision and accuracy for the data set. This process will identify any analytical methods and compounds for which the QA objectives are not satisfied, and corresponding sample data will be qualified with a "flag" indicating the problem. Samples collected on the same day, analyzed in the same run or batch, or individual samples may be flagged, depending on the type of problem that has been identified.

Reanalysis or re-sampling may be recommended at this time if data are determined to be unacceptable for the intended application.

The qualifier codes, or "flags," will be stored with the data and printed with the data when reported or transferred for any purpose. The specific statistical procedures and qualifier codes used in the validation process are described in detail in Section 13. After data are received from the laboratory, entered, checked, and qualified, they are a permanent part of the database and cannot be deleted or altered.

The data validation process is one where the USEPA National Functional Guidelines will be followed as applied systematically to the APA data set. The following data qualifiers may be used, depending on the results of the QC data for the data set:

B- Compound found in the laboratory or method blank data

U- Compound reported as less than the method detection limit

J- Compound reported at above the method detection limit but below the reporting limit

E- Compound exceed the instrument calibration range

8.4 Reporting

Data reporting for this project will consist of QA reporting, investigative data reporting, and QC data reporting.

General reporting practices for measurement data will include:

- Heading information identifying the sample batch and the analytical method
- Unique sample identification number or code
- Consistent units of measure
- Consistent number of significant figures
- No blank or dashed places reported; all spaces will contain a designation (i.e., not analyzed, not sampled, etc.)
- Explanation of outlier values or the cause for deviation from historical data
- Comparison with regulatory threshold values if applicable

- QA flags
- Quantification of accuracy and precision for analytical data
- Non-detect results will be recorded as "< [reporting limit]"

8.4.1 Investigative Data Reporting

Measurement data generated during the course of an investigation will be reported in tabular form from the computerized database. The formats of the reports will vary, depending on the objectives of the investigation. In general, data will be presented according to sampling location, analytical method, parameter, and/or matrix. All data will be reported with the qualifiers discussed above, and units will be specified. Commonly used reporting formats will be catalogued and used repeatedly, while specialized formats will be developed as needed.

8.4.2 General Reporting Procedures

The procedures employed to ensure report quality involve the following:

- All calculations and measurements will be verified by recalculation by the person initially providing data. The calculations and measurements are then checked by another individual who signs and dates the calculation sheets. Any calculations and measurements that differ from the initial totals are resolved by both individuals. Once the calculations and measurements are included in an internal working copy of a document, the figures are rechecked during peer review. If there are many such calculations within a report, a certain percentage (10 to 50 percent) are checked again during peer review.
- Numerical values presented in reports and comparisons of numbers appearing in text, tables, and appendixes will be addressed in the manner discussed above.

8.4.3 QC Data Reporting

QC results will be reported by sample matrix and method in tabular form. How these QC results influence the measurement data will be delineated. For example, matrix spike interference will influence specific samples, while laboratory blank contamination will influence all samples extracted or analyzed on a specific day or during a specific analytical run. Two levels of tables may be constructed for each type of QC check. The first level table will contain all QC data, and will present one line per parameter or analysis. First level table formats will be used in presenting duplicate samples and analyses, matrix and method spikes, and system blank results. First level QC data tables will be generated for all investigations.

Specially developed table formats will be used occasionally as an aid to interpretation of the investigative data. The particular format will depend on how the QC results are expected to influence the investigative data. This type of table might be used to identify corresponding investigative results (samples analyzed on corresponding dates), which may be inaccurate. Specialty tables will be generated automatically or manually, depending on the volume of data to be processed and the complexity of the calculations.

9.0 ANALTYICAL PROCEDURES AND CALIBRATION

This section contains brief descriptions of calibration procedures and analytical methodology for the analysis of air samples that will be collected during the testing. Reproductions of the methods used during this program are included as an appendix to this volume. Each method is briefly described in the following sections.

9.1 Method Detection Limits

The MDL is defined as the minimum concentration of a substance that can be measured and reported with 99 percent confidence that the analyte concentration is greater than zero. Laboratories perform MDL studies on an annual or quarterly basis (depending on the method) to demonstrate that they can meet or exceed the method-recommended MDLs. The USEPA procedure used for establishing MDLs is described in Appendix B of Part 136 Definition and Procedure for the Determination of the Method Detection Limit -Revision 1.1, 40 CFR 136, 1984. This procedure consists of analyzing seven aliquots of a standard spiked at three-to-five times the expected MDL, which is taken through all the sample processing steps of the analytical method. The MDL is defined as three times the standard deviation of the mean value for the seven analyses. In the few cases where the individual laboratory has experimentally determined MDLs higher than recommended MDLs, the method-recommended MDL is shown in parentheses in the appropriate table or text.

9.2 Laboratory Standards and Reagents

Laboratory standards and reagents are obtained from the following suppliers:

For organic analysis, analytical standards are obtained from USEPA sources, SUPELCO, Radian laboratory in Austin, and MSD isotopes. Spectral grade and reagent grade solvents and reagents are obtained from chemical suppliers such as Aldrich, Sigma, Burdick and Jackson, EM Science, and Baxter.

All standards and laboratory reagents, with the exception of common laboratory solvents, are dated upon receipt. The preparation and use of all standards are recorded in bound laboratory notebooks that document standard traceability to USEPA or National Institute of Standards and Technology (NIST) standards. Additional information recorded includes date of preparation, concentration, name of the preparer, and expiration date, if applicable.

9.3 Methods of Canister Analysis

The following describes the analysis procedure to be used for the determination of VOCs. When a sample is received from the field, it is first assigned a sample delivery group (SDG) number and a laboratory number. The sample information is logged into a master log notebook and the computer Laboratory Information System (LIMS). The canister pressure is measured and logged into the computer and then the canister is pressurized with Ultra High Purity (UHP) nitrogen or helium to 5 pounds per square inch gauge (psig). The final pressure is then measured and recorded. The canisters are pressurized to provide positive pressure for removing the sample.

9.3.1 USEPA Method TO-15 Full Scan Analysis, Canister Sampling Gas Chromatography/Mass Spectroscopy (GC/MS) for VOCs

USEPA Method TO-15 GC/MS full scan method uses a sorbent trapping system with a high-resolution capillary column to analyze for VOCs using full scan GC/MS. This method can be used for many hazardous air pollutants (HAPs) compounds including polar organics, since no dryer is used. The method can measure most compounds down to 0.1 ppbv. The list of compounds selected for the program APA is provided in Attachment 2 (70 compounds), and a copy of the EAS protocol is provided in Attachment 3. Note that quantitation of up to 86 compounds can be achieved by this method, and 70 compounds have been selected for the APA based on compounds known to have been used on site, and compounds known or suspected to be found in the subsurface. That is, only compounds listed on BRC's site-related chemical (SRC) list are included in the full scan mode analyte list. The SRC list can be found in BRC's project *Closure Plan* (BRC, ERM, and DBS&A 2007). The 16 compounds not included are: 2-propanol, 4-ethyltoluene, acrolein, acrylonitrile, allyl chloride, cyclohexane, Freon 114, hexane, methacrylonitrile, methyl methacrylate, methylstyrene, octane, propionitrile, t-1,4-dichloro-2-butene, tetraethyl lead, and tetrahydrofuran. Limiting the compound list to project related or potentially project related compounds reduces unnecessary data as well as improves the analytical sensitivity of the method.

Samples are analyzed on an HP 5890 Series II gas chromatograph and HP 5971 MSD quadrapole mass spectrometer detector. A 1.0 milliliter (mL) to 200 mL gas sample is loaded from the air sampling canister or bag onto the sorbent trap. A gas phase internal standard mixture is injected with each sample prior to sample loading. The sample is concentrated on a solid sorbent which affords large sample volume and low detection limits for target analytes. After the sample is trapped, it is thermally desorbed and focused onto the beginning of a 0.32 mm ID deactivated fused silica capillary column; 60 meter, DB-5, 0.25 mm ID fused silica capillary column in the GC. The GC is temperature programmed from -10° C to 220° C at a ramp rate of 13° C/min. As the column is heated, the compounds elute off the column and enter the mass spectrometer. The MS is scanned from 45 to 300 atomic mass units (amu) with a scan rate of 1 to 2 seconds for the full scan mode of operation. The GC/MS is tuned and operated according to the specifications outlined in the USEPA (1999) draft scope of work for VOC compounds in ambient air, and USEPA Method 8260 in the SW-846 Test Methods. Compounds are calibrated by the external standard procedure using NIST traceable air standards as described below. The RPD of a duplicate pair is less then 30% at 10 ppbv and the average MDL is approximately 0.1 ppbv for most compounds at a 500 mL load volume.

The standards used for the routine analytical tests are commercial NIST traceable gas standards normally ordered at a concentration of 2 to 10 parts per million by volume (ppmv). Commercial standards are available for the TO-14 GC/MS list and special in-house standards are prepared for those compounds where commercial standards are not readily available.

The GC/MS compounds are calibrated by using a dilution of the NIST traceable standard. The initial calibration curve consists of three to five calibration points. The continuing calibration consists of one point for the GC/MS full scan. The response factors for the initial calibration curve are to be within 30% RSD. If the response factor for the daily standard is more than 30% RPD from the average response factor of the initial calibration a new calibration curve is prepared. Standards are prepared by using a gas dilution system on the gas chromatograph or by making static dilutions to atmospheric levels. The gas dilution system is constructed from an eight-port gas sampling valve with various size sample loops. The loops are filled with the standard and flushed with “zero air.” The gas dilution system is used for the daily instrument calibration. The concentration of the individual target compounds is determined using the initial calibration curve response factors.

Laboratory data for TO-15 full scan will be reported in concentration units of ppbv and $\mu g/m^3$ and flux units of $\mu g/m^2$-min.

9.3.2 USEPA Method TO-15 SIM, Canister Sampling Gas Chromatography/Mass Spectroscopy (GC/MS) for VOCs

USEPA Method TO-15 GC/MS SIM operation method uses a sorbent trapping system with a high-resolution capillary column to analyze for VOCs for a selected list of VOCs. This method can be used for many VOCs, except that the number of compounds is limited in order to achieve the lowest detection limits possible. SIM operation is similar to the description provided above for TO-15 full scan, except that the instrument if focused to a handful of 'ion windows' as opposed to a full spectra of ion counts. The advantage to this is that lower MDLs can be achieved. The method can measure most compounds on the SIM list down to less than 0.01 ppbv.

Compound selection was based on Method TO-15 full scan not being able to meet conservative risk-based target levels. Attachment 4 presents the Method TO-15 full scan reporting limits, the reporting limits needed to meet risk-based target levels (based on calculated indoor air concentration using the equations and parameters in BRC's project *Closure Plan* [BRC, ERM, and DBS&A 2007] and comparison to USEPA Region 6 media-specific screening levels [MSSLs] for air), and whether the Method TO-15 full scan mode reporting limits achieves these risk-based target levels. There are 20 compounds for which Method TO-15 full scan mode does not meet the required report limits. The list of the 20 compounds selected for the program APA SIM analysis is provided in Table 6.

Table 6. Compounds Included in the TO-15 SIM Analysis and Detection Limits

Compound	CAS Number	MDL ppbv	Reporting Limit ppbv	MDL µg/m^3	Reporting Limit µg/m^3
1,1,1,2-Tetrachloroethane	630-20-6	0.005	0.026	0.035	0.18
1,1,2,2-Tetrachloroethane	79-34-5	0.005	0.026	0.035	0.18
1,1,2-Trichloroethane	79-00-5	0.005	0.026	0.028	0.14
1,2,3-Trichloropropane	96-18-4	0.005	0.026	0.031	0.16
1,2-Dibromo-3-chloropropane	96-12-8	0.01	0.026	0.098	0.26
1,2-Dibromoethane	106-93-4	0.005	0.026	0.039	0.20
1,2-Dichloroethane	107-06-2	0.005	0.026	0.021	0.11
1,2-Dichloropropane	78-87-5	0.005	0.026	0.024	0.12
1,4-Dichlorobenzene	106-46-7	0.005	0.026	0.031	0.16
Benzene	71-43-2	0.005	0.026	0.016	0.085
Benzyl chloride	100-44-7	0.005	0.026	0.026	0.14

Table 6. Compounds Included in the TO-15 SIM Analysis and Detection Limits

Compound	CAS Number	MDL ppbv	Reporting Limit ppbv	MDL µg/m^3	Reporting Limit µg/m^3
Bromodichloromethane	75-27-4	0.005	0.026	0.034	0.18
Carbon tetrachloride	56-23-5	0.005	0.026	0.032	0.17
Chloroform	67-66-3	0.005	0.026	0.025	0.13
Dibromochloromethane	124-48-1	0.005	0.026	0.043	0.23
Hexachlorobutadiene	87-68-3	0.01	0.026	0.11	0.28
Naphthalene	91-20-3	0.01	0.026	0.53	0.14
Tetrachloroethene	127-18-4	0.005	0.026	0.035	0.18
Trichloroethene	79-01-6	0.005	0.026	0.027	0.14
Vinyl chloride	75-01-4	0.005	0.026	0.013	0.068

1) The MDL = 3.14 * standard deviation of seven replicate measurements
2) The actual reported MDL may vary based on Canister dilution or matrix interferences

9.4 USEPA Recommended Method for Measuring Radon Gas in Air with AC Canisters

AC canisters, collected from static flux chambers, will be sampled and analyzed following the USEPA Office of Air and Radiation (6604J)guidance document titled "*Indoor Radon and Radon Decay Product Measurement Device Protocols'* dated August, EPA 402-R-92-004, July 1992 revised, (www.epa.gov/radon/pubs/devprot1.html). This protocol describes the use of passive dosimetry for radon adsorbed onto AC with detection by gamma scintillation or gamma spectroscopy. The commercial laboratory Quality Manual used for conducting the analysis is included in Attachment 3.

The AC canisters are sampled by removing the cylindrical canister from the shipping container, opening the access port on the canister, suspending the canister in the static flux chamber for the duration of the sample collection interval, removing the canister from the flux chamber, fixing the lid on the canister, repackaging the canister for shipping, and then shipping the AC canister to the laboratory for analysis. The canister is analyzed in the laboratory for radon decay products by placing the canister in a gamma detector. The gamma count is used, along with the exposure time period, to calculate a radon concentration expressed as pCi/L. Calibration is performed by exposing the detector to known radon standards. Water content corrections (water may be adsorbed on the AC which reduces the adsorption of the charcoal) may be conducted by the laboratory depending on the canister configuration and the weight of the canister as it is received by the laboratory. The MDL for this technique is about 0.1 pCi/L. Laboratory data for the radon

method will be reported in concentration units of pCi/L. The data analysis will report the flux of radon in the units of pCi/m^2-min.

10.0 INTERNAL QUALITY CONTROL

Internal QC consists of collecting and/or analyzing a series of duplicate, replicate, blank, and matrix spike samples to ensure that the analytical results are within QC limits specified for the program. Laboratory QC samples are documented at the bench and reported with the analytical results. The QC sample results are used to quantify precision and accuracy, and identify any problems or limitations in the associated sample results. Field QC samples will be documented in field logbooks and submitted "blind" to the laboratory. These components of the sampling program will help produce data of known quality throughout the sampling and analysis component of the program.

The USEPA methods selected for use on this program (USEPA TO-14, USEPA TO-15, and AC dosimetry for radon), will meet the USEPA QA/QC specifications in the respective methods.

10.1 Analytical Laboratory Quality Control Samples

Laboratory QC is necessary to control the analytical process, to assess the accuracy and precision of analytical results, and to identify assignable causes for atypical analytical results. The QC checks in the laboratory protocol are specific to the analytical method and generally include the use of one or more of the following QC samples.

10.1.1 Calibration Standards

Initial calibration is performed as required for each analytical method, usually using a range of calibration standards with the low standard near the detection limit for the compound. These standards are used to determine the linear dynamic range for the initial instrument calibration.

10.1.2 Quality Control Check Samples

QC check samples are standard samples containing the analytes of interest at a specified concentration, usually in the mid-calibration range. These samples are prepared independent of the calibration standard, and are used to demonstrate that the instrument is operating within acceptable accuracy and precision limits. QC check samples are required for GC/MS analyses. They are usually analyzed at the beginning and after every 10 samples are analyzed.

10.1.3 Reagent Blanks

A reagent blank is a sample composed of all the reagents (in the same quantities) used in preparing a real sample for analysis. It is carried through the same sample preparation procedure as a real sample. Reagent blanks are used to ensure that interferences from the analytical system, reagents, and glassware are under control. The required frequency for analyzing VOC method reagent blanks is specified in the analytical SOP for each method, and generally consists of one per day for each method/instrument and/or one per extraction batch.

10.1.4 Method Spike/Method Spike Duplicates

A method spike is a sample of target analytes at known concentrations that is spiked into a field sample before sample preparation and analysis. Two aliquots of the sample may be spiked and used for the duplicate analysis. The results of the analysis of the duplicate spiked samples are used to measure the percent recovery of each spiked compound and to compare the recovery between samples, which provides an estimate of the accuracy and precision of the method. The calculations for accuracy and precision are outlined in Section 13, and the QA objectives for accuracy are given in Section 4.

10.1.5 Laboratory Duplicates (Duplicate Analyses)

Laboratory duplicates are repeated but independent determinations of the same sample by the same analyst, at essentially the same time and under the same conditions. The sample is split in the laboratory and each fraction is carried through all stages of sample preparation and analysis. Duplicate analyses measure the precision of each analytical method. The method of calculation for precision is outlined in Section 4, and QC objectives for precision are listed in Table 1. Laboratory duplicate analyses are performed for 10 percent of samples analyzed, or at least one per day, for analytical methods that do not require matrix spike-matrix spike duplicates.

Attachment 3 summarizes the specific internal QC checks performed as required for the analytical methods. This attachment also includes information relating to the initial calibration and ongoing calibration checks.

10.2 Field Quality Control Samples

Field QC includes QC for the TVA-1000 instrument and replicate and blank sample collection and analysis. Field QC is summarized in Attachment 5.

10.2.1 Field Duplicate Samples

A field duplicate sample is a second sample collected at the same location with the original sample. Duplicate sample results are used to assess precision, including variability associated with both the laboratory analysis and the sample collection process. Duplicate samples will be collected simultaneously or in immediate succession using identical recovery techniques, and treated in an identical manner during storage, transportation, and analysis.

Recovery and analysis of five percent or at least one duplicate sample per day for each method will be performed. The sample containers will be assigned a control number such that they cannot be identified (blind duplicate) as duplicate samples by laboratory personnel performing the analysis.

10.2.2 Field Blanks

Field blanks are samples of purified air that are collected and processed in the field using the same sampling and handling procedures as other samples. Field blanks are used to assess the potential introduction of contaminants to the samples during sample collection in the flux chamber and analysis in the laboratory. The frequency requirements for preparing field blanks will be five percent of the samples collected over the course of the sampling program.

11.0 PERFORMANCE AND SYSTEM AUDITS

Systems audits, performance audits, and data quality audits are independent assessments of sample collection and analysis procedures. Audit results are used to evaluate the ability of the system to produce data that fulfill the objectives established for the program, satisfy the QC criteria, and identify any areas requiring corrective action. A systems audit is a qualitative review of the overall sampling or measurement system, while a performance and data quality audit is a quantitative assessment of a measurement system.

11.1 Technical Systems Audit

A technical systems audit is an on-site, qualitative review of the sampling or analytical system. Sampling systems will be inspected at the beginning of the sampling task by Dr. Schmidt. Due to the limited activity and adherence to standard protocols, no formal systems auditing will be performed. Based on the results of Phase 1, performance auditing may be included in Phase 2 testing activities. It is assumed that the Nevada Division of Environmental Protection (NDEP) will conduct systems auditing during the field and data reduction activities.

The internal laboratory systems reviews routinely include:

- Calibration procedures and documentation
- Completeness of data forms, notebooks, and other reporting requirements
- Data review and validation procedures
- Data storage, filing, and record-keeping procedures
- Sample custody procedures
- QC procedures, control limits, and documentation
- Operating conditions of facilities and equipment
- Documentation of maintenance activities
- Systems and operations overview

The field systems review will include:

- Calibration procedures and documentation for field meters and other measurement devices
- Complete documentation of field logbooks and sampling data sheets
- Organization and minimization of potential contamination sources while in the field
- Proper sample collection, storage, and transportation procedures
- Compliance with the established Chain-of-Custody procedures for sample documentation and transfer to the laboratory

11.2 Performance Audits and Data Quality Audits

Performance audits and data quality audits quantitatively assess the data produced by a measurement system. A performance audit involves submitting accepted reference standards for analysis for each analytical method and/or analytical instrument. The standards for each matrix are selected to reflect the range of concentrations expected for the sampling program. The performance audit answers questions about whether the measurement system is within control limits and whether the data produced meet the analytical QA specifications. The data quality audit evaluates data quality indicators, and identifies limitations that may be encountered in data applications.

Because selected laboratories are licensed by the State of Nevada as certified testing laboratories and participate in an approved Performance Evaluation Program, no laboratory audits will be performed.

12.0 PREVENTATIVE MAINTENANCE PROCEDURES

12.1 Field Equipment/Instruments

The field equipment for this project includes the calibrated rotometers used to control sweep air flowrate into the flux chamber. Specific preventative maintenance procedures to be followed for field equipment are those recommended by the manufacturer.

Critical spare parts and disposable or expendable items will be kept on-site to minimize instrument down time. Backup rotometers and primary standard instrumentation should be available on-site or within one-day shipment to avoid delays in the field schedule.

12.2 Laboratory Instruments

As part of their QA/QC Program, a routine preventative maintenance program will be conducted by the selected laboratory to minimize the occurrence of instrument failure and other system malfunctions. Designated laboratory personnel will be responsible for performing routine scheduled maintenance, and coordinate with the vendor for the repair of all instruments. All laboratory instruments are maintained in accordance with manufacturer's specifications and the requirements of the specific method employed. This maintenance will be carried out on a regular, scheduled basis, and will be documented in the laboratory instrument service logbook for each instrument. Emergency repair or scheduled manufacture's maintenance is provided under a repair and maintenance contract with factory representatives. Routine preventative maintenance schedules will be provided with the selected laboratories SOPs.

13.0 SPECIFIC ROUTINE PROCEDURES USED TO ACCESS DATA PRECISION

The assessment of measurement data is required to ensure that the QA objectives for the project are met, and that quantitative measures of data quality are provided. A distinction must be made between routine QC and data assessment that is conducted as a part of laboratory operations, and the project-related data assessment process conducted after the data have been reported. It must be assumed that the planning and monitoring that have gone into the sampling and analysis process have served to control the process as much as possible to produce data of sufficient

quality for project needs. After the data have been reported, it is necessary to identify any part of the process that could not be controlled, and to what extent that may affect the quality of the reported data.

The routine QC procedures conducted in the laboratory are established in the analytical SOPs. The laboratory is responsible for following those procedures and operating the analytical systems within statistical control limits. These procedures include proper instrument maintenance, calibration checks, and internal QC sample analyses at the required frequencies (i.e., reagent blanks, matrix spike/matrix spike duplicates [MS/MSD], laboratory duplicates). One of the additional ongoing data assessment processes is to maintain control charts for representative QC sample analyses in order to monitor system performance. This provides verification that the system is in statistical control and indicates when performance problems occur, so the problems can be corrected as soon as possible. When reporting the sample data, the laboratory is required to provide the results of associated QC sample analyses.

Problems occur in spite of all precautions taken in planning and execution of the sampling and analysis task. In these cases, the data assessment conducted by Dr. Schmidt after the data have been reported must identify the problem, determine which data are affected, and state how these data may be limited for use in the intended applications.

The discussion of data assessment presented in this section pertains to the project-related assessment of data that have been reported after laboratory analyses have been completed. Data assessment procedures established for the testing include:

- Evaluation of blank results to identify systematic contamination
- Statistical calculations for accuracy and precision using the appropriate QC sample results
- Estimation of completeness in terms of the percent of valid data
- Recommendations for corrective actions such as reanalysis or resampling if data are critically affected
- Assignment of data qualifier flags to the data as necessary to reflect limitations identified by the process

Some basic statistical calculations used in the data assessment process are presented along with a discussion of specific applications to environmental sample results.

13.1 Blank Data Assessment

Reagent blank results indicate whether any of the contaminants reported in sample results may be attributed to laboratory sources and, therefore, would not likely present in the sampled medium. The most common laboratory contaminants are methylene chloride, phthalates, acetone, and toluene. These are recognized as being potentially ubiquitous in the laboratory environment and controlling them to within acceptable low levels is part of standard laboratory procedure.

If contamination from these compounds is reported in blank samples, the samples associated with the blank--either the same analytical or extraction batch--may be qualified using a data qualifier (B) to indicate that some or all of these compounds may be from laboratory sources. If the concentrations reported in the samples are similar to the blank concentrations, it is likely that all of the contamination was introduced; this assessment is then made in the report for the sampling task.

13.2 Accuracy

As previously defined, accuracy is associated with correctness and is a comparison between a measured value and a known, or 'true,' value. Accuracy is calculated from method spike (spikes of the pure matrix) or matrix spike results.

Spike results are reported by the laboratory as percent recovery and are compared to the accuracy objectives stated in Section 4. Results that do not satisfy the objectives are assigned a data qualifier flag (A) to indicate uncertainty associated with inaccuracy.

Method spikes are spikes of a reference material into a sample matrix (e.g., canister or cryotrap) in the lab. If recovery is outside the established limits, samples from the same batch may be qualified. If any results appear atypical and could be related, those results may also be qualified. The flagged data will be discussed in the report for the sampling task, and specific limitations such as poor or enhanced recovery for specific compounds will be stated.

The percent recovery of matrix spike samples will be calculated using Equation 13-1.

$$\%R = \frac{A - B}{C} \times 100 \qquad \text{Eqn. 13-1}$$

Where:

A = The analyte concentration determined experimentally from the spiked sample;

B = The background level determined by a separate analysis of the unspiked sample and;

C = The amount of the spike added.

13.3 Precision

Precision is a measure of variability between duplicate or replicate analyses and is calculated for field and laboratory replicates. By definition, field precision incorporates laboratory precision. Precision is calculated as the RPD between duplicate analyses or MS or MSD as appropriate. The calculated RPDs are compared to the objectives stated in Section 4. Results that do not satisfy the objectives are assigned a data qualifier flag indicating uncertainty associated with imprecision (P).

An average RPD may be calculated and reported as a measure of overall analytical precision for compounds with multiple measurements. The specific samples collected or analyzed in duplicate are flagged if they do not satisfy the QA objectives. In addition, associated samples may be flagged to indicate variability due to poor precision. For poor field duplicate precision, samples collected by the same sampling team, from the same equipment, or on the same day may be affected; close evaluation of those results should indicate the most likely source of variability and the corresponding samples will be qualified as warranted. For poor laboratory precision, samples processed and analyzed in the same batch will be more closely evaluated, and any anomalous results will be qualified.

Dr. Schmidt is responsible for ensuring that these codes are assigned to the data as required by the established QC criteria, and that they are reported and understood by project staff using the data for specific applications. He is also responsible for initiating corrective actions for analytical problems identified during the QC data assessment process. These corrective actions range from verifying that the method was in statistical control during the analytical runs, to reanalysis of the sample, to resampling.

The RPD will be calculated for each pair of duplicate analysis using the Equation 13-2.

$$RPD\,(\%) = \left[\frac{S - D}{\left(\frac{S + D}{2} \right)} \right] \times 100 \qquad \text{Eqn. 13-2}$$

Where:

S = First sample value (original or MS value)

D = Second sample value (duplicate or MSD value)

13.4 Completeness

Completeness is determined after the QC data have been evaluated and the results applied to the measurement data. In addition to results identified as being outside of the QC limits established for the method, the occurrence of matrix effects, and lost samples, samples that could not be analyzed for any other reason are included in the assessment of completeness. The percentage of valid results is reported as completeness.

Data completeness will be calculated using Equation 13-3.

$$Completeness = \frac{Valid\ Data\ Obtained}{Total\ Data\ Planned} \times 100 \qquad \text{Eqn. 13-3}$$

13.5 Corrective Action

Review of sampling logs and/or analytical results may indicate problems that invalidate the results or critically influence their use. In these cases, corrective action may be required to ensure that valid data are provided. Corrective actions include: recalibration and reanalysis if the analytical system is shown to be out of statistical control; reanalysis if systematic contamination has occurred; resampling if sampling procedures or sample handling have been improper or caused contamination. The severity of the problem and the importance of affected samples will dictate when one of these actions will be required.

General recommendations in any case are to follow good laboratory practice and good management practice for all aspects of the sampling and analysis program. These include development and strict adherence to SOPs for all areas, and the establishment of clear responsibilities and lines of communication within the sampling and analytical staff, as well as between project and laboratory staff.

14.0 CORRECTIVE ACTION

During the course of the testing program, it is the responsibility of the Dr. Schmidt to see that all measurement procedures are followed as specified and that measurement data meet the prescribed acceptance criteria. In the event a problem arises, it is imperative that prompt action be taken to correct it.

14.1 Reporting Malfunctions

Problems that require corrective action will be documented by Dr. Schmidt as presented in the field log book. He will initiate the corrective action request in the event that QC results exceed acceptability limits or upon identification of some other problem or potential problem. Corrective action may also be initiated by the laboratory coordinators or a representative of BRC based upon QC data. Depending upon the severity of the problem, corrective actions range from use of data qualifier flags, to reanalysis of the sample or samples affected.

14.2 Quality Assurance Reports to Management

Effective management of a field sampling and analytical effort requires timely assessment and review of field activities. This will require effective interaction between the field team members, the laboratory, and the client.

Dr. Schmidt will be responsible for informing team members on the status of their respective tasks and results of the QC activities. This will ensure that quick and effective solutions can be implemented should any data quality problems arise. The use of frequent, oral reporting provides an effective mechanism for ensuring ongoing evaluation of measurement efforts. These discussions will address some of all of the following:

- Summary of activities and general program status
- Summary of calibration and QC data
- Summary of unscheduled maintenance activities
- Summary of corrective action activities
- Status of any unresolved problems
- Assessment and summary of data completeness

Summary of any significant QA/QC problems, corrective action, and recommended and/or implemented solutions not included above.

15.0 HEALTH AND SAFETY

All project personnel working on site are required to:

1. Contact facility site health and safety personnel and obtain information on facility health and safety requirements, and

2. Adhere to the health and safety plan for the site.

Common sense will help to keep field personally out of harms way, which may include but is not limited to the usual slip-trip hazards, lifting injuries, and awareness of working with compressed gases, but also extends to working on rough terrain.

16.0 REFERENCES

Basic Remediation Company (BRC), Environmental Resources Management (ERM), and Daniel B. Stephens & Associates, Inc. (DBS&A). 2007. BRC Closure Plan, BMI Common Areas, Clark County, Nevada. May.

Dixon, W.J., 1953. W.J. Dixon, "Processing Data for Outliers," Biometrics, 1953, Vol. 9, No. 1, pp. 74-89.

Schmidt, C.E. 2008. Technical Memorandum. Verification Study: Comparison of the Static Flux Chamber Technique Using Activated Charcoal Canisters to the USEPA Dynamic Flux Chamber and the PTG-7Rn Radon Detection Analyzer Conducted at the BMI Common Areas (Eastside).

USEPA, 1986. Measurement of Gaseous Emission Rates From Land Surfaces Using an Emission Isolation Flux Chamber, Users Guide. EPA Environmental Monitoring Systems Laboratory, Las Vegas, Nevada, EPA Contract No. 68-02-3889, Radian Corporation, February, 1986. (available as pdf file on the web site www.ceschmidt.com)

USEPA, 1986. Validation of Flux Chamber Emission Measurements on a Soil Surface. Draft Report. Prepared for: Shelly J. Williamson, USEPA, Environmental Monitoring Systems Laboratory, Exposure Assessment Division, Las Vegas, Nevada. Prepared by Radian Corporation, June 19, 1986.

USEPA, 1989. Office of Air Quality Planning and Standards, Air Superfund National Technical Guidance Study Series, Volume 2: Estimation of Baseline Air Emissions at Superfund Sites; Interim Final, EPA-450/1-89/002, 1989. (available as pdf file on the web site www.ceschmidt.com)

USEPA, 1992. Office of Air and Radiation (6604J) guidance document titled "Indoor Radon and Radon Decay Product Measurement Device Protocols' dated August, EPA 402-R-92-004, July 1992 revised, (www.epa.gov/radon/pubs/devprot1.html).

USEPA, 1999. Compendium of Methods for the Determination of Toxic Organic Compounds in Ambient Air, 2nd Ed. Compendium Method TO-15, Determination of Volatile Organic Compounds (VOCs) in Ambient Air Collected in Specially Prepared Canisters with Subsequent Analysis by Gas Chromoatography/Mass Spectrometry. Center for Environmental Research Information, Office of Research and Development, January.

ATTACHMENT 1

SURFACE FLUX MEASUREMENT DATA FORM

SURFACE FLUX MEASUREMENT DATA FORM

DATE _____ **SAMPLERS** _____

LOCATION _____

SURFACE DESCRIPTION _____

CURRENT ACTIVITY _____

INSTRUMENT TYPE _____ **I.D. NO.** _____ **TYPE** _____ **ID NO.** _____

INSTRUMENT BASELINE _____

PROJECT QC: BACKGROUND MEASUREMENTS ☐ BLANK MEASUREMENTS ☐ REPLICATE MEASUREMENTS ☐
AMBIENT CONCENTRATIONS _____
CHAMBER I.D. _____ **PHOTO TAKEN:** Yes ☐ No ☐ _____
CHAMBER SEAL _____ **CONDENSATION:** Yes ☐ No ☐ B. PRESS _____
AMBIENT CONDITIONS: Sun ☐ P.Sun ☐ Cloudy ☐ Wind at 5', __ mph Wind at Seal,__ mph
TEMP_____ **RAIN:** Yes ☐ No ☐ Comment _____
PRIOR CHAMBER CLEANING: Full Wash ☐ Wet Wipe ☐ Dry Wipe ☐ None ☐ _____
SAMPLE LINE: Back Flushed Prior to Start ☐ Purged Prior to Sampling ☐ New Line ☐ Used Line ☐
SWEEP AIR _____ **CC**_____ **SUPPLIER** _____ **PSIG START**_____ **PSIG STOP** _____

Time	Sweep Air (L/min)	Residence Number	Temperature				Real-Time		Sample Number	Comments
			Chamber		Ambient					
			Surface	Air	Surface	Air	(µg/m^3)	(ppmv)		
		0								
		1								
		2								
		3								
		4								
		5								

COMMENTS:

_____
_____
_____
_____
_____
_____
_____
_____
_____
_____

SITE DIAGRAM:

ATTACHMENT 2

LIST OF COMPOUNDS FOR TO-15 FULL SCAN MODE OPERATION AND MDLs

ATTACHMENT 2
LIST OF COMPOUNDS FOR USEPA METHOD TO-15 FULL SCAN MODE OPERATION AND MDLs
(Page 1 of 2)

Compound	CAS Number	MDL ppbv	RL ppbv	MDL µg/m^3	RL µg/m^3
1,1,1,2-Tetrachloroethane	630-20-6	0.1	0.51	0.72	3.62
1,1,1-Trichloroethane	71-55-6	0.1	0.52	0.58	2.89
1,1,2,2-Tetrachloroethane	79-34-5	0.1	0.52	0.73	3.65
1,1,2-Trichloroethane	79-00-5	0.1	0.51	0.57	2.86
1,1-Dichloroethane	75-34-3	0.1	0.52	0.43	2.15
1,1-Dichloroethene	75-35-4	0.1	0.52	0.42	2.13
1,1-Dichloropropene	563-58-6	0.1	0.49	0.46	2.3
1,2,3-Trichloropropane	96-18-4	0.11	0.55	0.68	3.39
1,2,4-Trichlorobenzene	120-82-1	0.1	0.52	0.79	3.94
1,2,4-Trimethylbenzene	95-63-6	0.1	0.52	0.52	2.61
1,2-Dibromo-3-chloropropane	96-12-8	0.22	1.1	2.2	10.98
1,2-Dibromoethane	106-93-4	0.1	0.52	0.82	4.09
1,2-Dichlorobenzene	95-50-1	0.1	0.52	0.64	3.2
1,2-Dichloroethane	107-06-2	0.1	0.52	0.43	2.15
1,2-Dichloropropane	78-87-5	0.1	0.52	0.49	2.46
1,3,5-Trimethylbenzene	108-67-8	0.1	0.52	0.53	2.64
1,3-Dichlorobenzene	541-73-1	0.1	0.52	0.64	3.2
1,3-Dichloropropane	142-28-9	0.11	0.54	0.52	2.58
1,4-Dichlorobenzene	106-46-7	0.1	0.52	0.64	3.2
1,4-Dioxane	123-91-1	0.09	0.44	0.33	1.64
2,2-Dichloropropane	594-20-7	0.11	0.53	0.5	2.53
2-Butanone	78-93-3	0.09	0.43	0.26	1.31
2-Hexanone	591-78-6	0.09	0.44	0.37	1.86
Acetone	67-64-1	0.09	0.45	0.22	1.1
Acetonitrile	75-05-8	0.22	1.12	0.48	2.39
Benzene	71-43-2	0.1	0.52	0.34	1.7
Benzyl chloride	100-44-7	0.09	0.45	0.48	2.41
Bromochloromethane	74-97-5	0.1	0.51	0.55	2.76
Bromodichloromethane	75-27-4	0.08	0.4	0.55	2.77
Bromoform	75-25-2	0.09	0.47	0.99	4.96
Bromomethane	74-83-9	0.1	0.51	0.41	2.04
Carbon disulfide	75-15-0	0.09	0.45	0.29	1.45
Carbon tetrachloride	56-23-5	0.1	0.52	0.67	3.38
Chlorobenzene	108-90-7	0.1	0.52	0.5	2.48
Chloroethane	75-00-3	0.1	0.51	0.28	1.39
Chloroform	67-66-3	0.1	0.52	0.52	2.59
Chloromethane	74-87-3	0.1	0.51	0.22	1.09
cis-1,2-Dichloroethene	156-59-2	0.1	0.52	0.42	2.11
cis-1,3-Dichloropropene	10061-01-5	0.1	0.52	0.48	2.41
Dibromochloromethane	124-48-1	0.09	0.44	0.77	3.87
Dibromomethane	74-95-3	0.11	0.55	0.97	4.84
Dichlorodifluoromethane	75-71-8	0.1	0.51	0.52	2.61

ATTACHMENT 2
LIST OF COMPOUNDS FOR USEPA METHOD TO-15 FULL SCAN MODE OPERATION AND MDLs
(Page 2 of 2)

Compound	CAS Number	MDL ppbv	RL ppbv	MDL µg/m^3	RL µg/m^3
Dichloromethane	75-09-2	0.1	0.52	0.37	1.86
Ethanol	64-17-5	0.22	1.12	0.44	2.18
Ethylbenzene	100-41-4	0.1	0.52	0.46	2.33
Freon 113	76-13-1	0.1	0.52	0.81	4.07
Hexachlorobutadiene	87-68-3	0.1	0.52	1.14	5.68
Isobutyl alcohol	78-83-1	0.23	1.13	0.84	4.21
Isopropylbenzene	98-82-8	0.11	0.57	0.58	2.89
Isopropyltoluene	99-87-6	0.11	0.55	0.62	3.12
m & p-Xylene	108-38-3	0.21	1.03	0.92	4.61
Methyl iodide	4227-95-6	0.19	0.94	1.13	5.67
Methyl Isobutyl Ketone	108-10-1	0.09	0.46	0.38	1.95
Methyl tert butyl ether	1634-04-4	0.08	0.39	0.29	1.45
Naphthalene	91-20-3	0.22	1.09	1.19	5.9
n-Butylbenzene	104-51-8	0.1	0.52	0.59	2.95
n-Heptane	142-82-5	0.08	0.42	0.35	1.78
n-Propylbenzene	103-65-1	0.11	0.54	0.55	2.74
o-Xylene	95-47-6	0.1	0.52	0.46	2.31
sec-Butylbenzene	135-98-8	0.11	0.52	0.59	2.95
Styrene	100-42-5	0.1	0.52	0.45	2.26
tert-Butylbenzene	98-06-6	0.11	0.52	0.59	2.85
Tetrachloroethene	127-18-4	0.1	0.52	0.72	3.61
Toluene	108-88-3	0.1	0.52	0.4	2
trans-1,2-Dichloroethene	156-60-5	0.09	0.44	0.36	1.8
trans-1,3-Dichloropropene	10061-02-6	0.1	0.52	0.48	2.41
Trichloroethene	79-01-6	0.1	0.52	0.57	2.85
Trichlorofluoromethane	75-69-4	0.1	0.51	0.59	2.95
Vinyl acetate	108-05-4	0.09	0.43	0.31	1.56
Vinyl chloride	75-01-4	0.1	0.51	0.27	1.35

Note:
The actual reported MDL may vary based on Canister dilution or matrix interferences.
CAS - Chemical abstract system
MDL - Method detection limit
RL - Reporting limit
ppbv - Parts per billion by volume
µg/m^3 - microgram per cubic meter

ATTACHMENT 3

SUMMARY OF LABORATORY QUALITY CONTROL

TO-15 FULL SCAN AND SIM LABORATORY PROTOCOLS

Environmental Analytical Service
STANDARD OPERATING PROCEDURE

SOP Number: 11.TO15.01

EAS Method: EPA TO15 Volatile Organics by GC/MS Full Scan (MSD1)

EPA Method: TO15 The Determination of Volatile Organic Compounds (VOCs) in Ambient Air & Source Using SUMMA Passivated Canisters and Gas Chromatographic Analysis.

Written By: Steve Hoyt

Approval: _____
Lab Director

---

1. MATRIX, INTERERENCES, SCOPE:

This method can be used to analyze for volatile organic compounds (VOCs) in ambient air samples collected in SUMMA canisters or Tedlar bags. This method can be used for TO-14, TO-14A and TO-15. The EAS QC criteria is different for each of these methods and must be checked prior to analysis.

2. METHOD SUMMARY:

The ambient sample is loaded through a Carbo trap to remove water vapor, carbon dioxide, and concentrated on a stainless steel trap packed with glass beads. The VOCs are separated using a 60 meter fused capillary column directly connected to the source of an HP 5970 MSD. Depending on the compounds and volume of the sample analyzed, the Method Detection Limit (MDL) can be as low as 0.01 parts-per-billion by volume (ppbv) and as high as 20 ppbv (depending on linearity) for an ambient air sample. For soil gas or landfill gas, the MDL can be as low as 0.2 ppmv and as high as 5000 ppmv**.**

3. HOLDING TIMES, PRESERVATION, CONTAINERS:

The standard holding time as specified in EPA TO15 is 30 days. However some clients have a project specific holding time of 14 days.

4. SAFETY:

4.1. The method uses Liquid Oxygen which can cause frostbite.

4.2. Safety goggles and gloves are recommended.

4.3. Secure all pressurized gas cylinders with chains.

4.4. Do not wear open-toed shoes.

5. EQUIPMENT, SUPPLIES:

5.1. Hewlett Packard 5890 Gas Chromatograph
5.2. Hewlett Packard 5970 Mass Selective Detector
5.3. Hewlett Packard Chemstation Software
5.4. NUTECH 8533 Universal Sample Concentrator
5.5. NUTECH Trap Temperature Controller
5.6. Zero Air, Helium, Compressed Nitrogen, and Liquid N_2 tanks
5.7. NIST traceable Standard cylinder(s)
5.8. Electrically heated Cryotrap
5.9. Liquid O_2
5.10. 2 metal-cased, cylindrical, glass Dewar flasks; 665 ml and 350 ml
5.11. NIST traceable flow controller for determining the sample volume
5.12. NIST traceable timer for determining the sample volume

6. REAGENTS, STANDARDS:

6.1. Internal Standard Mix: Prepared Gas Standard (5-10 ppmV) containing Pentafluorobenzene, 1,4-Difluorobenzene, Toluene-d8, Chlorobenzene-d5, and Bromofluorobenzene. For the EAS IS compound list the Internal Standard Mix is made from neet materials and is NIST traceable by weight.

6.2. Primary Calibration Standard: TO-14 Compound List. Commercial gas standard from Scott Marrin, Spectra, or Scott Specialty NIST traceable 1 ppmv gas standards for TO-14 target compounds.

6.3. Primary Calibration Standard: TO-15 Compound List. For the EAS TO-15 compound list the Primary Calibration Standard is made from neet materials and is NIST traceable by weight. The standard is prepared from three mixes. The TO-15 list is made at 1 ppmv, the 8260 List is made at 1 ppmv, and the 8260 Special List is made at 2 ppmv. The standard is prepared in an AL150 cylinder according to the Standard Preparation SOP 1.05.

6.4. A lab spike with an approximate concentration of laboratory spike compounds of 0.100 ppbv is prepared in a AL150 cylinder. The cylinder is spiked and pressurized to 1500 psig and the final pressure is measured using a NIST traceable pressure gauge. The actual concentration of the lab spike is calculated from the final dilution information and certification against a Primary standard.

7. STANDARDIZATION, CALIBRATION:

See Section 10 for initial and continuing calibration criteria.

8. OPERATING CONDITIONS:

Nutech Clamshell Heater to 280 C
Nutech Oven Temperature 120-150C
Nutech Heater to trap 195 C

GC/MS Conditions

Capillary Column: 60 meter, 0.25 DB-5 column
Carrier Gas: Helium, 20 psig column pressure; 150 ml/min (NUTECH)
Sample Flow: 100 ml/min

Summary of Method Parameters (Full Scan Regular List)

EM volts: based on tune
Mass scan: 35 to 260 amu
Scan/sec: 1.6
Threshold: 500

Temperature Program: -10°C, 3 min
Ramp Rate: 6°C/min
Final Temp: 203°C for 0.5 min
Run Time: 38 min

9. PROCEDURE:

9.1. Daily Startup

9.1.1. Turn on the monitor and computer for MSD1.

9.1.2. Turn on the NUTECH Controller.

9.1.3. Make sure that the Nutech Clamshell control box is turned on and the temperature is at 280°C. A temperature sensor may need to be plugged into the yellow connector if it has been previously removed. Make sure the clamshell is not on the Carbo trap. Check Nutech oven temperature, it should be about 122C (look in back of concentrator). Run the small fan to cool the carbo trap for about 5 minutes or until it is cool to touch.

9.1.4. Turn on the liquid N_2, Zero Air, and Compressed Nitrogen tanks. Make sure that the pressures on the primary pressure gauge for the Zero Air, Compressed Nitrogen, and UHP Helium tanks are above 200 psi. Replace the tank if the primary pressure is less than 200 psi. Set the pressure on the secondary pressure gauge to 75 psi for the Zero Air tank, 25 psi for the Compressed Nitrogen, and 60 psi for the UHP Helium. These pressures are approximate and should be verified in the run log or maintenance log.

9.1.5. Reset the carrier flow through the Carbo trap with the Digital Flow Check™ to 350 ml/min by attaching the flow check to the right side of the desorption apparatus.

9.1.6. Check Zero Air line and ambient line flow with the Digital Flow Check™. Set the flow from the Zero Air line to the same rate the initial 5 pt calibration

curve was run. (The default flow rate is 100 ml/min.) Make certain that the flow controller is connected to the vent line. Set the intake flow rate through the ambient line to 100 ml/min unless otherwise specified by your supervisor. The flow meter (black box) should read 99 - 103 if the flow has been properly set. Record the flow in the run log.

9.1.7. Create a new directory for the day on the hard drive of the instrument computer as described in SOP 2.03.

9.1.8. Click on START and scroll to PROGRAMS, then to "EnviroQuant #1" and scroll to "ENVTop" and click to launch Chemstation. Under the "Methods" menu click on "Load and Run Method". Load the most current Full Scan method and set up the data collection file for the run. Under data file name enter the directory and name of the file to which you want to save.

See SOP 2.03 Analytical File Naming and Storage and 2.02 Sample Analysis and Processing for more details.

9.1.9. Daily Analytical Protocol

See SOP 2.03 Analytical File Naming and Storage and 2.02 Sample Analysis and Processing for more details.

9.1.10. Check the PFTBA Tune. Select Tune MS menu, Manual tune, File -> load tune file. Select the most current tune from the menu. Open the calibration valve, File -> Generate report. Close calibration valve and exit Manual tune. Refer to SOP 2.06 for more information on tuning the GC/MS for BFB.

9.2 Daily Standardization

9.2.1. Under the "Methods" menu in Chemstation, click on "Load and Run Method". Load the most current Full Scan method and set up the data collection file for the run. Once all the necessary information has been properly entered click on "Run Method".

9.2.2. Make certain that switches for valves 1,2, and 6 on the NUTECH are in the "Load" position and that the 8 port valve lever is positioned to load the 5.0 ml loop (normal CCV standard volume to be loaded). (RL Position)

9.2.3. Make sure that the heat box is off the Carbo trap. The Carbo trap must be at room temperature before proceeding (use the small fan as needed to aid in cooling).

9.2.4. Place the cryotrap in liquid O_2.

9.2.5. Connect the source line to the standard cylinder. Load the standard (section 6.2.) for 10 seconds onto a 5.0 ml loop (normal CCV standard volume) on the 8 port valve.

9.2.6. Rotate the 8 port valve lever and allow Zero Air to flow through for 2 minutes.

9.2.7. Connect the source line to the internal standard (IS) cylinder. Load the IS (section 6.1.) for 2 minutes onto the 2.0 ml loop (LL Loop) on the 8 port valve.

9.2.8. Rotate the 8 port valve lever and allow Zero Air to flow through for 2 minutes.

9.2.9. Repeat Steps 9.2.5 to 9.2.8 to load the second standard (TO-15 compound standard) if needed. If more then two standards are to be loaded, repeat Steps 9.2.5 to 9.2.8 for each standard.

9.2.10. Flip the valve 2 switch into the "Inject" position. Place the heat box on (around) the Carbo trap and run the timer for 10 minutes.

9.2.11. After the 10 minutes, flip valve 6 to the "inject position", dip cryofocus in liquid O_2, take the liquid O_2 off the cryotrap, and turn on the heater and heat the trap for 10 minutes.

9.2.12. After the 10 minutes, flip valve 6 back to the "Load" position, and turn on the cryo (liquid N_2), press [CLEAR] [**.**] [ENTER] [ON] on the GC keypad.

9.2.13. When the oven temp on the GC panel reaches -10°C, press [START] on the GC keypad and quickly (gently) pull the cryofocus out of the liquid O_2. Set the timer for 7 minutes.

9.2.14. After the timer goes off, turn off the cryo, press [CLEAR] [**.**] [ENTER] [OFF] on the GC keypad. Turn off the trap heater and take the heat box off of the Carbo trap (use the small fan as needed to aid in cooling).

9.2.15. After the standard run is over and the data analysis is complete, go to "2nd Data Analysis" and load the method and data file for the standard run. Check the BFB and make sure that it passes the PFTBA tune criteria (See SOP 2.06).

9.2.16. In "2nd Data Analysis" under "Quant" click on "Qedit Quant Result" and make sure that all the compounds detected have been integrated correctly. Manually integrate if necessary (and instructed to do so) according to the guidelines described in Appendix 1.0 in the SOP 3.01 Processing Samples in the DAB folder. Exit and save changes (if any) otherwise exit and abort changes. Under "Quant" click on "Generate Report", "Detailed, Text Only" to the printer. When manually integrating, integrate the sample to match the way the initial calibration standards were integrated. For Data Deliverable packages print the integration, explain why the manual integration was done, and sign.

9.2.17. Under "ConCal" click on "Evaluate Data File as Con Cal to Screen". Check the continuing calibration against the QC criteria for the project or the method. If it still does not pass run the standard again. If it passes go on to the next section. If it fails you may have to run a new 5 pt curve or take other corrective actions; consult your supervisor before doing so.

9.3. Laboratory Control Spikes

9.3.1. Set up Laboratory control spike file name and method in the computer as described in Section 9.2.1 using the file naming system detailed in SOP 2.03.

9.3.2. Repeat steps 9.2.2 through 9.2.14 substituting the appropriate Laboratory Control Spike Cylinder for the "standard" in the loading instructions.

9.3.3. After the run is over and the data analysis is complete, go to "2nd Data Analysis" and load the method and data file for the spike run. Manually integrate if necessary (and instructed to do so) according to the guidelines described in Appendix 1.0 in the SOP 3.01 Processing Samples in the DAB folder.

9.3.4. Run the spike again, this will be the duplicate control spike. Refer to the QC Criteria for the method and project for information on acceptable laboratory control duplicates.

9.3.5. Check the report against the QC criteria for the Method or Project. If the criterion is not met, reanalyze the spike(s). If no reproducibility is obtained,

notify your supervisor immediately. The spike may have to be re-certified or a new spike needs to be prepared. .

9.4. Zero Air Blank / Method Blank / System Blanking

9.4.1. Set up Method Blank file name and method in the computer as described in Section 9.2.1 using the file naming system detailed in SOP 2.03.

9.4.2. Make certain that switches for valves 1,2, and 6 on the NUTECH are in the "Load" position and that the 8 port valve lever is positioned to load the internal standard (IS).

9.4.3. Repeat Steps 9.2.3 through 9.2.4

9.4.4. Allow Zero Air to flow through for a total of 5 minutes (500 ml).

9.4.5. During the Zero Air loading, connect the source line to the IS cylinder. Load the IS (see section 6.1.) for 10 seconds onto the 2.0 ml loop on the 8 port valve. (LL position).

9.4.6. After the timer goes off, proceed with steps 9.2.10 through 9.2.14.

9.4.7. After the run is over and the data analysis is complete, go to "2nd Data Analysis" and load the method and data file for the spike run. Manually integrate if necessary (and instructed to do so) according to the guidelines described in Appendix 1.0 in the SOP 3.01 Processing Samples in the DAB folder.

9.4.8. Check the report against the QC criteria for the Method or Project. If the criterion is not met, reanalyze the blank. If the second blank does not pass, notify your supervisor. Your supervisor may have you run a third blank, fill out a corrective action form, or perform troubleshooting/maintenance on the GC/MS. If you have a blank that passes the criterion then go on to the next step. (Note that "can checks" may be used as method blanks; consult your supervisor before doing so.)

9.5. Loading Ambient/Low Level Samples

9.5.1. Set up analysis file name and method in the computer as described in Section 9.2.1 using the file naming system detailed in SOP 2.03.

9.5.2. Make certain that switches for valves 1,2, and 6 on the NUTECH are in the "Load" position and that the 8 port valve lever is positioned to load the internal standard (IS).

9.5.3. Connect sample canister to the ambient intake line. Make sure that the canister is closed.

9.5.4. Repeat Steps 9.2.3 through 9.2.4.

9.5.5. The flow meter should read approximately 1.0 -2.0 to indicate that there are no system leaks.

9.5.6. Open the sample canister and run the timer for desired load volume based on flow (usually 100 ml/min).

9.5.7. During the sample loading, connect the source line to the IS cylinder. Load the IS (see section 6.1.) for 10 seconds onto the 2.0 ml loop on the 8 port valve. (LL position).

9.5.8. Close the sample canister when the timer goes off. Proceed with Steps 9.2.10 through 9.2.14.

9.5.9. After the run is over and the data analysis is complete, go to "2nd Data Analysis" and load the method and data file for the spike run. Manually integrate if necessary (and instructed to do so) according to the guidelines described in Appendix 1.0 in the SOP 3.01 Processing Samples in the DAB folder.

9.5.10. Check the report against the QC criteria for the Method or Project. If the criterion is not met, reanalyze the sample to meet QC Criteria. If the second sample does not meet QC requirements, notify your supervisor. Your supervisor may have you run a 3rd analysis, fill out a corrective action form, or perform troubleshooting/maintenance on the GC/MS.

9.6 Loading Source Samples

9.6.1. Set up analysis file name and method in the computer as described in Section 9.2.1 using the file naming system detailed in SOP 2.03

9.6.2. Repeat steps 9.2.2 through 9.2.14 substituting the appropriate Laboratory Control Spike Cylinder for the "standard" in the loading instructions.

9.6.3. After the run is over and the data analysis is complete, go to "2nd Data Analysis" and load the method and data file for the spike run. Manually integrate if necessary (and instructed to do so) according to the guidelines described in Appendix 1.0 in the SOP 3.01 Processing Samples in the DAB folder.

9.6.4. Check the report against the QC criteria for the Method or Project. If the criterion is not met, reanalyze the sample to meet QC Criteria. If the second sample does not meet QC requirements, notify your supervisor. Your supervisor may have you run a 3rd analysis, fill out a corrective action form, or perform troubleshooting/maintenance on the GC/MS.

10. QUALITY CONTROL CRITERIA:

TO-15

Parameter	EAS	Comments
BFB Tune	Daily	
Tuning Criteria with BFB	TO-15	
Initial Calibration	5pt points minimum Relative Standard Deviation (RSD) < 30% for TO-14 Compounds < 40% for other compounds 1,2,4-Trichlorobenzene, naphthalene, and hexachlorobutadiene can be up to 80% 4 Compounds can exceed criteria by 10%	2 to 50 ppbv 1 to 25 ppbv Project Specific Criteria can be specified in advance
Calibration Check Sample (CCS)	Every 12 months Same Percent RSD as Initial Calibration	
Continuing Calibration Verification (CCV)	Daily (24 hours) 5 ppbv Std Same Percent RSD as Initial Calibration	TO-15 uses 10 ppbv std
Internal Standard (IS)RT	Pentafluorobenzene 1,4-Difluorobenzne	Pentafluorobenzene is used instead of

	RT < 0.5 min daily std. Response 60% to 140%	Bromochlorobenzene which is a target compound
Surrogate	Toluene-d8 70-130% recovery	Matrix interferences can cause out of limits recoveries.
Method Blank	No target analytes above 3xMDL	
Laboratory Control Spike	1 per Daily Batch 70-130% for LCS list	LCS does not contain complete target list unless specified.
Matrix Spike	1 per Daily Batch if Requested 70-130% special list	There is an extra charge for matrix spike
Duplicate (One of below) Lab Control Dup Sample Matrix Spike Dup	1 duplicate with each 20 samples <30% for special LCS spike list Same Percent RSD as Initial Calibration for other compounds.	Only one duplicate is done in each DAB. This is usually an LCD
Canister Holding Times	30 days from sampling date	
Canister Certification	Certification <0.2 ppbv or less then 2x MDL of target compound by full scan GC/MS	
Field Duplicates	50% concentrations over 1 ppbv	

11. CALCULATIONS, DATA PROCESSING:

11.1. Automated Data Processing

11.1.1. The data is automatically processed on the Chemstation Software, but must be checked manually. The results are exported to an EXCEL spreadsheet for generation of the final report.

11.1.2. At the end of the sample run go into “2nd Data Analysis” and load the data file. Make sure that the correct method is loaded.

11.1.3. Once the file has been manually checked for proper integration, click on "Create/Modify Template/Database" under "CustRpt". This will prompt you to the linked EXCEL spreadsheet.

11.1.4. When the system links with EXCEL, click on the report you want to generate, e.g., to14fs.xls.

11.1.5. See SOP 2.07 – The Excel Analytical Report Template for information on processing reports.

12. METHOD PERFORMANCE, DETECTION LIMITS:

12.1. Method Detection Limits and Reporting Limits

12.1.1. The Reporting Limit (RL) for each compound is set to be the concentration of the lowest standard (0.5 ml standard). The RL values are obtained from the standard worksheet used for the calibration values in the initial calibration table.

12.1.2. The Method Detection Limit (MDL) values for each compound are obtained from the latest MDL study which is stored on the EAS_Server_MDL Studies\[instrument ID].

12.1.2.1. The MDL studies are updated each year or when there has been a major change instrument performance or operating procedures.

12.1.2.2. All results between the RL and the MDL are "J" flagged indicating that they are approximate concentrations.

13. DATA ASSESSMENT:

13.1. Determine whether the results of the DAB meet the QC requirements for the project.

13.2. Do a sample calculation to verify the accuracy of the calculations, conversions to $\mu g/m^3$, and the transfers of electronic files and spreadsheets.

13.3. Check for Transcription errors, omissions, and mistakes

13.4. Check to verify that the appropriate method, SOP, and target list have been used.

13.5. Enter any exceptions to the QC requirements or other quality comments in the case narrative.

13.6. There should be three-tier review process on all reports

13.1.1. The data should be 100% reviewed by the data entry person

13.1.2. The data should be 100% reviewed by a project manager other then a project manager that participated in data entry (second person review).

13.1.3. Final review by the Lab Director to verify reviews and do a sanity check. Quality Manager will review 10% of the packages for QC requirements.

14. HANDLING UNACCEPTABLE DATA:

14.1. Unacceptable Data is Data that does not meet all of the QC requirements either for the method or project specific QC.

14.2. When the analyst, data entry person, or project manager identifies any data that appears to be unacceptable, they will contact the Lab Director.

14.3. The Lab Director will determine if the data is unacceptable, and then either schedule a rerun of the sample, contact the client to determine if the data is acceptable, or will determine from prior experience with the project that the data is acceptable with a note in the case narrative.

15. REFERENCES:

15.1. S.D. Hoyt, Oregon Graduate Center, Beaverton, Oregon Ph.D., 1982. Environmental Science and Engineering Dissertation: Air-Sea Exchange of Atmospheric Trace Gases.

15.2. S.D. Hoyt, & R.A. Rasmussen, "Determining Trace Gases in Air and Seawater", Mapping Strategies in Chemical Oceanography, ACS Advances in Chemistry Series 209, American Chemical Society, Washington, D.C., 1985

15.3. Quality Assurance Division, EMSL, U.S. EPA, Compendium of Methods for the Determination of Toxic Organic Compounds in Ambient Air, May, 1998

15.4. Center for Environmental Research, U.S. EPA, Compendium of Methods for the Determination of Toxic Organic Compounds in Ambient Air, Second Edition, EPA/625/R-96/01b, January 1999.

15.5. S.D. Hoyt, V. Longacre, M. Straupe, "Measurement of Oxygenated Hydrocarbons and Reduced Sulfur Gases by Full-Scan Gas Chromatography/Mass Spectrometry (GC/MS): EPA Method TO-14", Sampling and Analysis of Airborne Pollutants, p. 133, Edited by Eric Wineger, L.H. Keith, Lewis Publications, 1993.

15.6. Office of Emergency and Remedial Response, U.S. EPA, U.S. Environmental Protection Agency Contract Laboratory Program, February, 1990.

15.7. T.J. Kelly, M.W. Holdren, Atmospheric Environment, 1995, 19,2595-2608

16. CORRECTIVE ACTIONS:

16.1. The following table lists the corrective actions for this method.

Corrective Actions

QC Parameter Out of Control	Corrective Action
Holding Times	1. Prepare to extract / analyze the samples immediately. 2. Inform the EAS project chemist immediately so that impact to data usability can be assessed. 3. Depending on impact to data usability, the sample will either be extracted / analyzed outside the holding time or a new sample will be collected.
Initial Calibration	1. Evaluate system. 2. Recalibrate as necessary. 3. Analyze samples only after initial calibration is acceptable.
Continuing Calibration	1. Evaluate system. 2. Reanalyze standard. 3. Recalibrate as necessary. 4. Reanalyze affected samples
Method Blank	1. Evaluate system. 2. Re-extract and reanalyze method blank and associated samples. 3. Analyze samples only after method blank is acceptable.
LCS Recovery	1. Evaluate system. 2. Re-extract and reanalyze LCS and associated samples within the holding time. 3. Report sample data only after LCS is acceptable
Surrogate Recovery	1. Evaluate system. 2. Reanalyze sample within the holding time. If acceptable, report acceptable data only. 3. If unacceptable, attempt to re-extract and reanalyze the sample within the holding time (expiration of holding time does not remove the need to re-extract and reanalyze the sample). 4. If no control exceedance is observed and the reanalysis is within the holding time, report acceptable data for sample and surrogate. 5. If a control exceedance is observed, or if reanalysis not within the holding time, report both sets of sample and surrogate data.
Internal Standard Recovery	1. Evaluate system. 2. Reanalyze sample within the holding time. If acceptable, report acceptable data only. 3. If unacceptable, attempt to re-extract and

Corrective Actions

QC Parameter Out of Control	Corrective Action
	reanalyze the sample within the holding time (expiration of holding time does not remove the need to re-extract and reanalyze the sample). 4. If no control exceedance is observed and the reanalysis is within the holding time, report acceptable data for sample and internal standards. 5. If a control exceedance is observed, or if reanalysis is not within the holding time, report both sets of sample and internal standard data.
MS/MSD Recovery and RPD	1. Evaluate system. 2. Reanalyze MS/MSD. IF acceptable, report acceptable data only. 3. If unacceptable, re-extract and reanalyze MS/MSD and report both sets of MS/MSD data.
Matrix Duplicate RPD	1. Evaluate system. 2. Reanalyze matrix duplicate. If acceptable, report acceptable data only. 3. If unacceptable, re-extract and reanalyze matrix duplicate and report both sets of matrix duplicate data.
Raised PQLs	1. Notify the EAS project chemist and document in the laboratory case narrative any raised PQLs due to matrix interference's and/or large sample dilutions.
Field-generated Blanks (includes trip blanks, equipment blanks, and field water blanks)	1. Evaluate method blank. 2. Evaluate field sampling and decontamination procedures. 3. Evaluate field water source. 4. Modify sampling and decontamination procedures, as appropriate.

17. TROUBLESHOOTING:

17.1. For Mechanical problems with the GC or MS consult with the troubleshooting guides in the manufacturers instrument manuals.

17.1.1. For GC: HP 5890A Gas Chromatograph Reference Manual, Volume II

17.1.1.1. Chromatographic Troubleshooting: Section 15

17.1.1.2. Electronic Troubleshooting: Section 19

17.1.2. For MS: There are two types of MS units. First consult the manual for the MS model being checked, then consult the manual for the other type of MS for additional ideas.

17.1.2.1. HP 5970B Mass Selective Detector – Hardware Manual. See Section 5.0.

17.1.2.2. HP 5971A MSD – Hardware Manual. Chapter 5

17.2. Routine Maintenance: Consult the manufacturers instrument manuals for routing maintenance information.

17.1.1. For GC: HP 5890A Gas Chromatograph Reference Manual, Volume I

17.2.1.1. Chromatographic Troubleshooting: Section 12

17.1.2. For MS: There are two types of MS units. First consult the manual for the MS model being checked, then consult the manual for the other type of MS for additional ideas.

17.2.2.1. HP 5970B Mass Selective Detector – Hardware Manual. See Section 4.0.

17.2.2.2. HP 5971A MSD – Hardware Manual. Chapter 6

18. SAMPLE COLLECTION, SHIPPING, STORAGE:

18.1. The sample collection procedures are described in a separate SOP.

18.2. The Holding Time for samples is given in the QC Criteria. Generally the holding time for Canisters is 30 days, although there are project specific holding times of 14 days or less depending on the project.

18.3. SUMMA canisters have not special storage or shipping requirements. Canisters are stored on shelves in the laboratory.

19. WASTE MANAGEMENT, POLLUTION PREVENTION:

19.1. There are no wastes generated by this method.

20. DEFINITIONS:

20.1. Analyte: The specific chemicals or components for which a sample is analyzed.

20.2. Calibration Standard: A substance or reference material used to calibrate an instrument.

20.3. Component: A single chemical entity, such as an element or compound.

20.4. Compromised Samples: Samples which are improperly samples, insufficiently documented, improperly collected, or exceeded holding times then delivered to lab.

20.5. Corrective Action: The action taken to eliminate the cause of a nonconformity, defect, or undesirable situation to prevent recurrence.
20.6. Detection Limit: The lowest concentration or amount of a target analyte that can be identified, measured, and reported with comfidence that the concentration is not a false positive value.
20.7. Holding Time: The time elapsed from the time of sampling to the time of extraction or analysis.
20.8. Internal Standard: A known amount of standard added to a test portion of a sample as a reference for evaluating and controlling precision.
20.9. Laboratory Control Sample: A sample matrix free of analytes of interest, spiked with verified known amounts of analytes. Used to establish intra-laboratory bias or assess the performance of all or a portion of the measurement system.
20.10. Matrix: The component or substrate that contains the analyte of interest.
20.11. Method Detection Limit: The minimum concentration of a substance that can be measured and reported with 99% confidence that the analyte concentration is greater then zero.
20.12. Quality Control: The overall system of technical activities whose purpose is to measure and control the quality of a product or service.
20.13. Quantitation Limits: Levels of target analytes that can be reported at a specific degree co confidence.
20.14. Spike: A known mass of target analysts added to a blank sample to determine the recovery efficiency for QC purposes.
20.15. Validation: The process of validating specified performance criteria.

21. TABLES, DIAGRAMS, FORMS:

21.1. See the following pages.

ENVIRONMENTAL ANALYTICAL SERVICE INC. **MSD #1**

INSTRUMENT LOGBOOK

EPA METHOD: _____ RUN METHOD: _____ BATCH DATE: _____

ANALYST: _____ TUNE: _____ EMV:_____ IS: _____

IS VOL: _____ INITIAL CAL STD / IS 1 : _____ CON CAL STD / IS 1: _____

INITIAL CAL STD / IS 2: _____ CON CAL STD / IS 2: _____

COMMENTS:

FILE NAME	CAN NO.	DESCRIPTION	VOLUME	COMMENTS

MSD #1 DAILY INSTRUMENT PERFORMANCE

ANALYST: _____

DATE: _____

☐ SETUP ☐ GASES ON

☐ VALVES IN START POSITION

☐ HEAT AREAS IN START POSITION

☐ LINES CONNECTED

GC OVEN TEMP

☐ TANK LEVEL AIR: N2:

(includes Liquid Nitrogen) HE: N2(l):

☐ GAS FLOW CHECK AIR:

FLOW:

☐ TUNE PEAK ☐ MS TEMP ☐

AIR LEAK ☐ VACUUM ☐

ISO RATIO ☐ GC OVEN TEMP ☐

☐ LOAD METHOD

☐ STANDARD RUN VERIFY CORRECT LOOPS and STANDARD

CORRECTIVE ACTION OR REPAIR FOR QC FAILURE

☐ Issued Repair Order Date: _____ Analyst: _____

Environmental Analytical Service
STANDARD OPERATING PROCEDURE

SOP Number: 11.TO15.02

EAS Method: EPA TO15 Volatile Organics by GC/MS SIM (MSD1)

EPA Method: TO15 The Determination of Volatile Organic Compounds (VOCs) in Ambient Air & Source Using SUMMA Passivated Canisters and Gas Chromatographic Analysis.

Written By: Steve Hoyt

Approval: _____
Lab Director

---

1. MATRIX, INTERERENCES, SCOPE:

This method can be used to analyze for volatile organic compounds (VOCs) in ambient air samples collected in SUMMA canisters or Tedlar bags. This method can be used for TO-14, TO-14A and TO-15. The EAS QC criteria is different for each of these methods and must be checked prior to analysis.

2. METHOD SUMMARY:

The ambient sample is loaded through a Carbo trap to remove water vapor, carbon dioxide, and concentrated on a stainless steel trap packed with glass beads. The VOCs are separated using a 60 meter fused capillary column directly connected to the source of an HP 5970 MSD. Depending on the compounds and volume of the sample analyzed, the Method Detection Limit (MDL) can be as low as 0.01 parts-per-billion by volume (ppbv) and as high as 20 ppbv (depending on linearity) for an ambient air sample. The use of selected ion monitoring (SIM) greatly improves the method detection limit (MDL) for VOC's. It is preferable to use a short list

of compounds for the SIM to get better MDL values, but this method can be used for the full TO-14 list.

3. HOLDING TIMES, PRESERVATION, CONTAINERS:

The standard holding time as specified in EPA TO15 is 30 days. However some clients have a project specific holding time of 14 days.

4. SAFETY:

4.5. The method uses Liquid Oxygen which can cause frostbite.

4.6. Safety goggles and gloves are recommended.

4.7. Secure all pressurized gas cylinders with chains.

4.8. Do not wear open-toed shoes.

5. EQUIPMENT, SUPPLIES:

5.13. Hewlett Packard 5890 Gas Chromatograph
5.14. Hewlett Packard 5970 Mass Selective Detector
5.15. Hewlett Packard Chemstation Software
5.16. NUTECH 8533 Universal Sample Concentrator
5.17. NUTECH Trap Temperature Controller
5.18. Zero Air, Helium, Compressed Nitrogen, and Liquid N_2 tanks
5.19. NIST traceable Standard cylinder(s)
5.20. Electrically heated Cryotrap
5.21. Liquid O_2
5.22. 2 metal-cased, cylindrical, glass Dewar flasks; 665 ml and 350 ml
5.23. NIST traceable flow controller for determining the sample volume
5.24. NIST traceable timer for determining the sample volume

6. REAGENTS, STANDARDS:

6.5. Internal Standard Mix. A 0.1 ppmv mixture of d3-vinyl chloride, aaa-trifluorotoluene, toluene-d8, and d3-methyl bromide is used for the internal standard and surrogate. A 2.0 ml volume is used for the internal standard.

6.6. Primary Calibration Standards: Commercial Gas Standard Mix: Scott Marrin and Scott Specialty NIST traceable 100 ppbv gas standard for TO-14 Target compounds which includes the SIM Target Compounds. A 1.0 ml volume is used for dilution.

6.7. Primary Calibration Standard: TO-15 Compound List. For the EAS TO-15 compound list the Primary Calibration Standard is made from neet materials and is NIST traceable by weight. The standard is prepared from three mixes. The TO-15 list is made at 1 ppmv, the 8260 List is made at 1 ppmv, and the 8260 Special List is made at 2 ppmv. The standard is prepared in an AL150 cylinder according to the Standard Preparation SOP 1.05.

6.8. Secondary Calibration Standard for TO-14: A 1 ppmv commercial TO-14 gas standard is used for a secondary calibration standard. A 0.1 ml volume is used for dilution.

6.9. Laboratory Control Spike forTO-14 Compound List. Commercial gas standard from Scott Marrin, Spectra, or Scott Specialty NIST traceable 1 ppmv gas standards for TO-14 target compounds.

7. STANDARDIZATION, CALIBRATION:

See Section 10 for initial and continuing calibration criteria.

8. OPERATING CONDITIONS:

Nutech Clamshell Heater to 280 C

Nutech Oven Temperature 120-150C

Nutech Heater to trap 195 C

GC/MS Conditions

Capillary Column: 60 meter, 0.25 DB-5 column
Carrier Gas: Helium, 20 psig column pressure; 150 ml/min (NUTECH)
Sample Flow: 100 ml/min

Summary of Method Parameters (Full Scan Regular List)

EM volts: based on tune
Mass scan: 35 to 260 amu
Scan/sec: 1.6
Threshold: 500

Temperature Program: -10°C, 3 min
Ramp Rate: 6°C/min
Final Temp: 203°C for 0.5 min
Run Time: 38 min

9. PROCEDURE:

9.2. Daily Startup

9.1.11. Refer to the primary SOP for this instrument

9.2 Daily Standardization

9.2.18. Refer to the primary SOP for this instrument

9.3. Laboratory Control Spikes

9.3.6. Refer to the primary SOP for this instrument

9.4. Zero Air Blank / Method Blank / System Blanking

9.4.9. Refer to the primary SOP for this instrument

9.5. Loading Ambient/Low Level Samples

9.5.11. Refer to the primary SOP for this instrument.

9.6 Loading Source Samples

9.6.5. Refer to the primary SOP for this instrument

10. QUALITY CONTROL CRITERIA:

Refer to the primary SOP for this instrument

11. CALCULATIONS, DATA PROCESSING:

11.2. Automated Data Processing

11.1.1. Refer to the primary SOP for this instrument.

12. METHOD PERFORMANCE, DETECTION LIMITS:

12.1. Refer to the primary SOP for this instrument

13. DATA ASSESSMENT:

13.1 Refer to the primary SOP for this instrument.

14. HANDLING UNACCEPTABLE DATA:

14.1 Refer to the primary SOP for this instrument.

15. REFERENCES:

15.1 Refer to the primary SOP for this instrument.

16. CORRECTIVE ACTIONS:

16.1 Refer to the primary SOP for this instrument.

17. TROUBLESHOOTING:

17.1 Refer to the primary SOP for this instrument

18. SAMPLE COLLECTION, SHIPPING, STORAGE:

18.1 Refer to the primary SOP for this instrument.

19. WASTE MANAGEMENT, POLLUTION PREVENTION:

19.1 Refer to the primary SOP for this instrument.

20. DEFINITIONS:

20.1 Refer to the primary SOP for this instrument

21. TABLES, DIAGRAMS, FORMS:

21.1 Refer to the primary SOP for this instrument.

ATTACHMENT 4

DETERMINATION OF USEPA METHOD TO-15 FULL SCAN MODE REPORTING LIMIT SUFFICIENCY

ATTACHMENT 4
DETERMINATION OF USEPA METHOD TO-15 FULL SCAN MODE REPORTING LIMIT SUFFICIENCY
(Page 1 of 2)

Compound	CAS Number	MDL ppbv	Reporting Limit ppbv	MDL µg/m^3	Reporting Limit µg/m^3	Reporting Limit OK?[1]	RL Needed µg/m^3	TO-15 SIM RL µg/m^3
1,1,1,2-Tetrachloroethane	630-20-6	0.1	0.51	0.72	3.62	NO	1.12	0.18
1,1,1-Trichloroethane	71-55-6	0.1	0.52	0.58	2.89	YES	--	--
1,1,2,2-Tetrachloroethane	79-34-5	0.1	0.52	0.73	3.65	NO	0.14	0.18
1,1,2-Trichloroethane	79-00-5	0.1	0.51	0.57	2.86	NO	0.52	0.14
1,1-Dichloroethane	75-34-3	0.1	0.52	0.43	2.15	YES	--	--
1,1-Dichloroethene	75-35-4	0.1	0.52	0.42	2.13	YES	--	--
1,1-Dichloropropene	563-58-6	0.1	0.49	0.46	2.3	YES	--	--
1,2,3-Trichloropropane	96-18-4	0.11	0.55	0.68	3.39	NO	0.015	0.16
1,2,4-Trichlorobenzene	120-82-1	0.1	0.52	0.79	3.94	YES	--	--
1,2,4-Trimethylbenzene	95-63-6	0.1	0.52	0.52	2.61	YES	--	--
1,2-Dibromo-3-chloropropane	96-12-8	0.22	1.1	2.2	11.0	NO	0.90	0.26
1,2-Dibromoethane	106-93-4	0.1	0.52	0.82	4.09	NO	0.015	0.20
1,2-Dichlorobenzene	95-50-1	0.1	0.52	0.64	3.2	YES	--	--
1,2-Dichloroethane	107-06-2	0.1	0.52	0.43	2.15	NO	0.32	0.11
1,2-Dichloropropane	78-87-5	0.1	0.52	0.49	2.46	NO	0.43	0.12
1,3,5-Trimethylbenzene	108-67-8	0.1	0.52	0.53	2.64	YES	--	--
1,3-Dichlorobenzene	541-73-1	0.1	0.52	0.64	3.2	YES	--	--
1,3-Dichloropropane	142-28-9	0.11	0.54	0.52	2.58	YES	--	--
1,4-Dichlorobenzene	106-46-7	0.1	0.52	0.64	3.2	NO	1.32	0.16
1,4-Dioxane	123-91-1	0.09	0.44	0.33	1.64	YES	--	--
2,2-Dichloropropane	594-20-7	0.11	0.53	0.5	2.53	YES	--	--
2-Butanone	78-93-3	0.09	0.43	0.26	1.31	YES	--	--
2-Hexanone	591-78-6	0.09	0.44	0.37	1.86	YES	--	--
Acetone	67-64-1	0.09	0.45	0.22	1.1	YES	--	--
Acetonitrile	75-05-8	0.22	1.12	0.48	2.39	YES	--	--
Benzene	71-43-2	0.1	0.52	0.34	1.7	NO	1.08	0.085
Benzyl chloride	100-44-7	0.09	0.45	0.48	2.41	NO	0.17	0.14
Bromochloromethane	74-97-5	0.1	0.51	0.55	2.76	YES	--	--
Bromodichloromethane	75-27-4	0.08	0.4	0.55	2.77	NO	0.47	0.18
Bromoform	75-25-2	0.09	0.47	0.99	4.96	YES	7.57	0.25
Bromomethane	74-83-9	0.1	0.51	0.41	2.04	YES	--	--
Carbon disulfide	75-15-0	0.09	0.45	0.29	1.45	YES	--	--
Carbon tetrachloride	56-23-5	0.1	0.52	0.67	3.38	NO	0.55	0.17
Chlorobenzene	108-90-7	0.1	0.52	0.5	2.48	YES	--	--
Chloroethane	75-00-3	0.1	0.51	0.28	1.39	YES	--	--
Chloroform	67-66-3	0.1	0.52	0.52	2.59	NO	0.36	0.13
Chloromethane	74-87-3	0.1	0.51	0.22	1.09	YES	--	--
cis-1,2-Dichloroethene	156-59-2	0.1	0.52	0.42	2.11	YES	--	--
cis-1,3-Dichloropropene	10061-01-5	0.1	0.52	0.48	2.41	YES	--	--
Dibromochloromethane	124-48-1	0.09	0.44	0.77	3.87	NO	0.35	0.23
Dibromomethane	74-95-3	0.11	0.55	0.97	4.84	YES	--	--
Dichlorodifluoromethane	75-71-8	0.1	0.51	0.52	2.61	YES	--	--
Dichloromethane	75-09-2	0.1	0.52	0.37	1.86	YES	--	--
Ethanol	64-17-5	0.22	1.12	0.44	2.18	YES	--	--
Ethylbenzene	100-41-4	0.1	0.52	0.46	2.33	YES	--	--
Freon 113	76-13-1	0.1	0.52	0.81	4.07	YES	--	--
Hexachlorobutadiene	87-68-3	0.1	0.52	1.14	5.68	NO	0.37	0.28
Isobutyl alcohol	78-83-1	0.23	1.13	0.84	4.21	YES	--	--
Isopropylbenzene	98-82-8	0.11	0.57	0.58	2.89	YES	--	--

ATTACHMENT 4
DETERMINATION OF USEPA METHOD TO-15 FULL SCAN MODE REPORTING LIMIT SUFFICIENCY
(Page 2 of 2)

Compound	CAS Number	MDL ppbv	Reporting Limit ppbv	MDL µg/m^3	Reporting Limit µg/m^3	Reporting Limit OK?[1]	RL Needed µg/m^3	TO-15 SIM RL µg/m^3
Isopropyltoluene	99-87-6	0.11	0.55	0.62	3.12	YES	--	--
m & p-Xylene	108-38-3	0.21	1.03	0.92	4.61	YES	--	--
Methyl iodide	4227-95-6	0.19	0.94	1.13	5.67	YES	--	--
Methyl Isobutyl Ketone	108-10-1	0.09	0.46	0.38	1.95	YES	--	--
Methyl tert butyl ether	1634-04-4	0.08	0.39	0.29	1.45	YES	--	--
Naphthalene	91-20-3	0.22	1.09	1.19	5.9	NO	0.24	0.14
n-Butylbenzene	104-51-8	0.1	0.52	0.59	2.95	YES	--	--
n-Heptane	142-82-5	0.08	0.42	0.35	1.78	YES	--	--
n-Propylbenzene	103-65-1	0.11	0.54	0.55	2.74	YES	--	--
o-Xylene	95-47-6	0.1	0.52	0.46	2.31	YES	--	--
sec-Butylbenzene	135-98-8	0.11	0.52	0.59	2.95	YES	--	--
Styrene	100-42-5	0.1	0.52	0.45	2.26	YES	--	--
tert-Butylbenzene	98-06-6	0.11	0.52	0.59	2.85	YES	--	--
Tetrachloroethene	127-18-4	0.1	0.52	0.72	3.61	NO	1.39	0.18
Toluene	108-88-3	0.1	0.52	0.4	2.0	YES	--	--
trans-1,2-Dichloroethene	156-60-5	0.09	0.44	0.36	1.8	YES	--	--
trans-1,3-Dichloropropene	10061-02-6	0.1	0.52	0.48	2.41	YES	--	--
Trichloroethene	79-01-6	0.1	0.52	0.57	2.85	NO	0.073	0.14
Trichlorofluoromethane	75-69-4	0.1	0.51	0.59	2.95	YES	--	--
Vinyl acetate	108-05-4	0.09	0.43	0.31	1.56	YES	--	--
Vinyl chloride	75-01-4	0.1	0.51	0.27	1.35	NO	0.46	0.068

Note: The actual reported MDL may vary based on Canister dilution or matrix interferences.

[1]Based on a comparison of the calculated indoor air concentration, based on the reporting limit and flux chamber specifications, to the USEPA Region 9 air preliminary remediation goal (PRG).

ATTACHMENT 5

SUMMARY OF FIELD QUALITY CONTROL

TABLE OF FIELD QC- TVA 1000 HYDROCARBON ANALYZER

QC PARAMETER	SPECIFICATION	FREQUENCY
Electronic Zero	Electronic Package Operational	Pre-Use Instrument Check
Instrument Blank	Within ±5 Times MDL	Pre and Post-Use Calibration
Span Calibration	±30% of Span Gas Value	Pre and Post-Use Calibration

TABLE OF FIELD QC- SAMPLE COLLECTION

QC PARAMETER	SPECIFICATION	FREQUENCY
Field Media Blank	None- used to qualify field data	One Per Trip up to 5%
Field System Blank	None- used to qualify field data	One per Trip; minimum of 5%
Field Sample Replicate	RPD of 50	One per Trip; minimum of 5%

BASIC REMEDIATION COMPANY
STANDARD OPERATING PROCEDURES
BMI COMMON AREAS
CLARK COUNTY, NEVADA

SOP-17

SOIL LOGGING

STANDARD OPERATING PROCEDURES

SOP-17
SOIL LOGGING

TABLE OF CONTENTS

Section **Page**

1.0 INTRODUCTION 1

2.0 DEFINITIONS 1
2.1 Grain Sizes 1
2.2 Physical Characteristics 2

3.0 RESPONSIBILITIES 4

4.0 SOIL LOGGING PROCEDURES 5
4.1 Field Classification of Soils 6
4.1.1 Procedure for Identifying Coarse-Grained Soils 6
4.1.2 Procedure for Identifying Fine-Grained Soils 8
4.1.3 Other Modifiers For Use With Fine-Grained Soils 8
4.1.4 Procedure for Identifying Borderline Soils 9
4.2 Descriptive Information for Soils 9
4.2.1 Color 9
4.2.2 Consistency/Density 10
4.2.3 Moisture 11
4.2.4 Grain Size 11
4.2.5 Odor 11
4.2.6 Cementation 12
4.2.7 Angularity 12
4.2.8 Structure 12
4.2.9 Lithology 13
4.2.10 Additional Comments 13
4.2.11 Bedrock Descriptions 13
4.3 Additional Boring Log Information 14

5.0 OTHER APPLICABLE SOPs 15

6.0 REFERENCES 15

LIST OF TABLES

Table 1. Criteria for Describing Dry Strength 3
Table 2. Criteria for Describing Dilatancy 3
Table 3. Criteria for Describing Toughness 4
Table 4. Criteria for Describing Plasticity 4
Table 5. Density/Consistency Based on Blow Counts 10
Table 6. Criteria for Describing Consistency 11
Table 7. Criteria for Describing Structure 13

LIST OF ATTACHMENTS

Attachment 1 Field Classification Guides
Attachment 2 Example Boring/Lithologic Log Form

DISCLAIMER

THE FOLLOWING STANDARD OPERATING PROCEDURE PROVIDES GENERAL GUIDANCE FOR BRC CONTRACTORS FOR TECHNICAL ISSUES ADDRESSED DURING ENVIRONMENTAL SITE INVESTIGATION AND REMEDIATION ACTIVITIES. IT IS NOTED, HOWEVER, THAT EACH SITE IS UNIQUE AND THESE GUIDELINES ARE NOT A SUBSTITUTE FOR COMMON SENSE AND GOOD MANAGEMENT PRACTICES BASED ON PROFESSIONAL TRAINING AND EXPERIENCE. IN ADDITION, INDIVIDUAL CONTRACT TERMS MAY AFFECT THE IMPLEMENTATION OF THIS STANDARD OPERATING PROCEDURE. BRC CONTRACTORS RESERVE THE UNRESTRICTED RIGHT TO CHANGE, MODIFY OR NOT APPLY THESE GUIDELINES IN THEIR SOLE, COMPLETE, AND UNRESTRICTED DISCRETION TO MEET CERTAIN CIRCUMSTANCES, CONTRACTUAL REQUIREMENTS, SITE CONDITIONS, OR JOB REQUIREMENTS.

1.0 INTRODUCTION

This Standard Operating Procedure (SOP) is applicable to logging soils at all sites requiring soil investigation by Basic Remediation Company (BRC) Contractors. The SOP is based on the Unified Soils Classification System (USCS) and the American Society for Testing and Materials (ASTM) Standard D2488-00 Standard Practice for Description and Identification of Soils (Visual-Manual Procedure) (ASTM, 2000). Variance from the logging procedures described herein shall be warranted only if specifically required in writing by a particular client or regulatory agency. A solid working knowledge of this SOP is important for BRC Contractors field personnel to standardize logging procedures and to enable subsequent correlations between borings at a site, allowing for accurate and thorough site characterization.

The information in this SOP is summarized in two soil logging field guides (attached). Laminated copies of these guides are available for field personnel; use of the field guides is strongly recommended. Other field guidance references may also be used according to personal preference; however, such references should be based on the USCS. Note that many references (for example, AGI Data Sheet grain-size scales) base soil classifications on the Wentworth Scale. Such scales may vary significantly from the USCS and may lead to inaccurate or inconsistent soil descriptions.

2.0 DEFINITIONS

Use of the USCS requires familiarity with the grain size ranges that define a particular type of soil, as well as several other physical characteristics. The grain size definitions and physical characteristics upon which soil descriptions are based are presented below. This information is also presented in tabular format on the field guides.

2.1 Grain Sizes

USCS grain sizes are based on U.S. standard sieve sizes, which are named as follows:

- Standard sieves with larger openings are named according to the size of the openings in the sieve mesh. For example, a "3-inch" sieve contains openings that are 3 inches square.

- Standard sieves with smaller openings are given numbered designations that indicate the number of openings per inch. For example, a "No. 4" sieve contains 4 openings per inch.

The following grain size definitions are paraphrased from the ASTM Standard D2488-00. Field personnel should familiarize themselves with the grain size definitions and refer to the appropriate field guide for a visual reference.

Boulders	Particles of rock that will not pass a 12-inch (300-mm) square opening
Cobbles	Particles of rock that will pass a 12-inch (300-mm) square opening and be retained on a 3-inch (75-mm) sieve
Gravel	Particles of rock that will pass a 3-inch (75-mm) sieve and be retained on a No. 4 (4.75-mm) sieve with the following subdivisions: – Coarse gravel passes a 3-inch (75-mm) sieve and is retained on a 3/4-inch (19-mm) sieve – Fine gravel passes a 3/4-inch (19-mm) sieve and is retained on a No. 4 (4.75-mm) sieve
Sand	Particles of rock that will pass a No. 4 (0.19-inch or 4.75-mm) sieve and be retained on a No. 200 (0.003-inch or 75-µm) sieve with the following subdivisions: – Coarse sand passes a No. 4 (0.19-inch or 4.75-mm) sieve and is retained on a No. 10 (0.08-inch or 2-mm) sieve – Medium sand passes a No. 10 (0.08-inch or 2-mm) sieve and is retained on a No. 40 (0.017-inch or 425-µm) sieve – Fine sand passes a No. 40 (0.017-inch or 425-µm) sieve and is retained on a No. 200 (0.003-inch or 75-µm) sieve
Silt	Soil passing a No. 200 (0.003-inch or 75-µm) sieve that is nonplastic or very slightly plastic and that exhibits little or no strength when air dried. Individual silt particles are not visible to the naked eye.
Clay	Soil passing a No. 200 (0.003 inch or 75-µm) sieve that can be made to exhibit plasticity within a range of water contents and that exhibits considerable strength when air-dried. Individual clay particles are not visible to the naked eye.

2.2 Physical Characteristics

The following physical characteristics are used in the USCS classification for fine-grained soils. A brief definition of each physical characteristic is presented below. Tables 1 through 4 present

descriptions of field tests that may be performed to estimate these properties in a field sample. However, with the exception of plasticity, the tests are generally too time consuming to perform regularly in the field. A determination of the type of fine-grained soil present in the sample can generally be made on the basis of plasticity, as described in Section 4.1.2.

Dry Strength	The ease with which a dry lump of soil crushes between the fingers (Table 1).
Dilatancy Reaction	The speed with which water appears in a moist pat of soil when shaking in the hand, and disappears while squeezing (Table 2).
Toughness	The strength of a soil, moistened near its plastic limit, when rolled into a 1/8-inch diameter thread (Table 3).
Plasticity	The extent to which a soil may be rolled into a 1/8-inch. thread, and re-rolled when drier than the plastic limit (Table 4).

Table 1. Criteria for Describing Dry Strength

Description	Criteria
None	The dry specimen crumbles into powder with mere pressure of handling.
Low	The dry specimen crumbles into powder with some finger pressure.
Medium	The dry specimen breaks into pieces or crumbles with considerable finger pressure.
High	The dry specimen cannot be broken with finger pressure. Specimen will break into pieces between thumb and a hard surface.
Very High	The dry specimen cannot be broken between the thumb and a hard surface.

Table 2. Criteria for Describing Dilatancy

Description	Criteria
None	No visible change in the specimen.
Slow	Water appears slowly on the surface of the specimen during shaking and does not disappear or disappears slowly upon squeezing.
Rapid	Water appears quickly on the surface of the specimen during shaking and disappears quickly upon squeezing.

Table 3. Criteria for Describing Toughness

Description	Criteria
Low	Only slight pressure is required to roll the thread near the plastic limit. The thread and the lump are weak and soft.
Medium	Medium pressure is required to roll the thread to near the plastic limit. The thread and the lump have medium stiffness.
High	Considerable pressure is required to roll the thread to near the plastic limit. The thread and the lump have very high stiffness.

Table 4. Criteria for Describing Plasticity

Description	Criteria
Nonplastic	A 1/8-inch (3-mm) thread cannot be rolled at any water content.
Low	The thread can barely be rolled and the lump cannot be formed when drier than the plastic limit.
Medium	The thread is easy to roll and not much time is required to reach the plastic limit. The thread cannot be re-rolled after reaching the plastic limit. The lump crumbles when drier than the plastic limit.
High	It takes considerable time rolling and kneading to reach the plastic limit. The thread can be re-rolled several times after reaching the plastic limit. The lump can be formed without crumbling when drier than the plastic limit.

3.0 RESPONSIBILITIES

This section presents a brief definition of field roles and the responsibilities generally associated with them. This list is not intended to be comprehensive; additional personnel may be involved in other aspects of the project. Project team member information is usually included in project-specific plans (e.g., work plan, field sampling plan, quality assurance plan), and field personnel should always consult the appropriate documents to determine project-specific roles and responsibilities. In addition, one person may serve in more than one role on any given project.

The **Project Manager** or **Task Leader** (a qualified Nevada Certified Environmental Manager [C.E.M.]) defines the objectives of field work; selects site-specific monitoring well design and installation methods with input from the Project Hydrogeologist and Field Team Leader; and maintains close supervision of activities and progress.

The **Project Hydrogeologist** (a qualified Nevada C.E.M.) selects site-specific drilling/sampling options, helps prepare technical provisions for drilling.

The **Field Team Leader** implements the selected drilling program and may also review boring logs.

The **Drilling Rig Geologist** records the boring logs and supervises the drilling subcontractor.

The **Quality Manager** performs field and logging process audits.

4.0 SOIL LOGGING PROCEDURES

The following aspects of a project must be considered before sampling and soil logging commences. This information is generally summarized in a project-specific work plan or field sampling plan, which should be thoroughly reviewed by field personnel prior to the initiation of work.

- Purpose of the soil logging (e.g., initial investigation, subsequent investigation, remediation)
- Known or anticipated hydrogeologic setting including lithology (consolidated/un-consolidated, depositional environment, presence of fill material), physical characteristics of the aquifer (porosity/permeability), type of aquifer (confined/unconfined), recharge/discharge conditions, aquifer thickness and ground water/surface water interrelationships
- Drilling conditions
- Previous soil boring or borehole geophysical logs
- Soil sampling and geotechnical testing program
- Characteristics of potential chemical release(s) (chemistry, density, viscosity, reactivity, and concentration)
- Health and Safety protection requirements
- Regulatory requirements

The procedures used to determine the correct soil sample classification are described below. These procedures are presented in tabular and flow chart form on the field guides.

4.1 Field Classification of Soils

The following soil classification procedures are based on the ASTM Standard D2488-00 for visual-manual identification of soils (ASTM, 2000). The flow chart is Attachment 1 to this SOP and presented in the field guide can be used to assign the appropriate soil group name and symbol. When naming soils, the proper USCS soil group name is given, followed by the group symbol. For clarity, it is recommended that the group symbol be placed in parentheses after the written soil group name.

Soil identification using the visual-manual procedures is based on naming the portion of the soil sample that will pass a 3-inch (75-mm) sieve. Therefore, before classifying a soil, any particles larger than 3 inches (cobbles and boulders) should be removed, if possible. Estimate and note the percentage of cobbles and boulders.

Using the remaining soil, the next step is to estimate the percentages, by dry weight, of the gravel, sand, and fine fractions (particles passing a No. 200 sieve). The percentages are to be estimated to the closest 5 percent. In general, the soil is *fine-grained* (e.g., a silt or a clay) if it contains 50 percent or more fines, and *coarse-grained* (e.g., a sand or a gravel) if it contains less than 50 percent fines. If one of the components is present but estimated to be less than 5 percent, its presence is indicated by the term *trace*. For example, “trace of fines” would be added as additional information following the formal USCS soil description.

4.1.1 Procedure for Identifying Coarse-Grained Soils

Coarse-grained soil contains less that 50 percent fines. If it has been determined that the soil contains less than 50 percent fines, the soil is a *gravel* if the percentage of gravel is estimated to be more than the percentage of sand. The soil is a *sand* if the percentage of gravel is estimated to be equal to or less than the percentage of sand.

If the soil is predominantly sand or gravel but contains an estimated 15 percent or more of the other coarse-grained constituent, the words "with gravel" or "with sand" is added to the group name. For example: "gravel with sand (GP)." If the sample contains any cobbles or boulders, the words “with cobbles” or “with cobbles and boulders” are added to the group name. For example: "silty gravel with cobbles (GM)."

5 Percent or Less Fines

The soil is a “clean gravel” or “clean sand” if the percentage of fines is estimated to be 5 percent or less. “Clean” is not a formal USCS name, but rather a general descriptor for implying little to no fines. Clean sands and gravels are given the USCS designation as either *well-graded* or *poorly-graded*, as described below.

Identify the soil as a *well-graded gravel* (GW) or as a *well-graded sand* (SW) if it has a wide range of particle sizes and substantial amounts of the intermediate particle sizes. Identify the soil as a *poorly-graded gravel* (GP) or as a *poorly-graded sand* (SP) if it consists predominantly of one grain size (uniformly graded), or has a wide range of sizes with some intermediate sizes obviously missing (gap- or skip-graded).

Note: When using the USCS designation, keep in mind the difference between grading and sorting. The term grading is used to indicate the range of particles contained in the sample. For example, a poorly-graded sand containing predominantly one grain size would be considered well-sorted, and vice-versa. One notable exception to this general rule is a skip-graded (bimodally distributed) sample; a sand containing two distinct grain sizes would be considered both poorly-sorted and poorly-graded. The USCS uses only the *grading* descriptor in soil naming, not the sorting descriptor.

≥ 15 Percent Fines

The soil is a *silty* or *clayey gravel* or a *silty* or *clayey sand* if the percentage of fines is estimated to be 15 percent or more. For example, identify the soil as *clayey gravel* (GC) or a *clayey sand* (SC) if the fines are clayey. Identify the soil as a *silty gravel* (GM) or a *silty sand* (SM) if the fines are silty. The coarse grained descriptor "poorly-graded" or "well-graded" is not included in the soil name, but rather, should be included as additional information following the formal USCS soil description.

>5 Percent but <15 Percent Fines

If the soil is estimated to contain greater than 5 percent but less than 15 percent fines, give the soil a dual identification using two group symbols. The first group symbol corresponds to a clean gravel or sand (GW, GP, SW, SP) and the second symbol corresponds to a clayey/silty gravel or sand (GC, GM, SC, SM). The group name corresponds to the first group symbol, and include the words "poorly-graded" or "well-graded", plus the words "with clay" or "with silt" to indicate the character of the fines. For example, "poorly-graded gravel with silt (GP-GM)".

4.1.2 Procedure for Identifying Fine-Grained Soils

Fine-grained soil contains 50 percent or more fines. The USCS classifies inorganic fine-grained soils according to their degree of plasticity (no or low plasticity, indicated with an "L"; or high plasticity, indicated with an "H") and other physical characteristics (defined in Section 2.2 and Tables 1 through 4). As indicated in Section 2.2, the field tests used to determine dry strength, dilatancy, and toughness are generally too time consuming to be performed on a routine basis. Field personnel should be familiar with the definitions of the physical characteristics and the concepts of the field tests; however, field classifications will generally be based primarily on plasticity. If precise engineering properties are necessary for the project (i.e., construction, modeling, etc.), geotechnical samples should be collected for laboratory testing. The results of the laboratory tests should be compared to the field logging results. Soil classifications based on plasticity are as follows:

- Lean clay (CL) soil has medium to high dry strength, no or slow dilatancy, and medium toughness and plasticity.
- Fat clay (CH) soil has high to very high dry strength, no dilatancy, and high toughness and plasticity.
- Silt (ML) soil has no to low dry strength, slow to rapid dilatancy, and low toughness and plasticity, or is nonplastic.
- Elastic silt (MH) soil has low to medium dry strength, no to slow dilatancy, and low to medium toughness and plasticity. They will air dry more quickly than lean clay and have a smooth, silky feel when dry.
- Organic soil (OL or OH) soil contains enough organic particles to influence the soil properties. Organic soils usually have a dark brown to black color and may have an organic odor. Organic soils will often change color, from black to brown for example, when exposed to the air. Organic soils normally will not have a high toughness or plasticity.

4.1.3 Other Modifiers For Use With Fine-Grained Soils

15 percent to 25 percent coarse-grained material

If the soil is estimated to have 15 percent to 25 percent sand or gravel, or both, the words "with sand" or "with gravel" (whichever is predominant) is added to the group name. For example: "lean clay with sand (CL)" or "silt with gravel (ML)". If the percentage of sand is equal to the percentage of gravel, use "with sand."

≥30 percent coarse-grained material

If the soil is estimated to have 30 percent or more sand or gravel, or both, the words "sandy" or "gravelly" is added to the group name. Add the word "sandy" if there appears to be the same or more sand than gravel. Add the word "gravelly" if there appears to be more gravel than sand. For example: "sandy silt (ML)", or "gravelly fat clay (CH)".

4.1.4 Procedure for Identifying Borderline Soils

To indicate that the soil may fall into one of two possible basic groups, a borderline symbol may be used with the two symbols separated by a slash. For example, a soil containing an estimated 50 percent silt and 50 percent fine grained sand may be assigned a borderline symbol "SM/ML". Borderline symbols should not be used indiscriminately. Every effort should be made to first place the soil into a single group and then to estimate percentages following the USCS soil description.

4.2 Descriptive Information for Soils

After the soil name and symbol are assigned, the soil color, consistency/density, and moisture content is to be described in that order. Other information is presented later in the description, as applicable.

4.2.1 Color

Color is an important property in identifying organic soils, and may also be useful in identifying materials of similar geologic or depositional origin in a given location. The Munsell Soil Color Charts should be used, if possible.

When using the Munsell Soil Color Charts, a general color, such as brown, gray, red, is first assigned to the soils. Then go to the correct area in the charts and assign the applicable color name and Munsell symbol. The ability to detect minor color differences varies among people, and the chance of finding a perfect color match in the charts is rare. Keeping this in mind should help field personnel avoid spending unnecessary time and confusion going through the chart pages. In addition, attempting to describe detail beyond the reasonable accuracy of field observations could lead to making poorer soil descriptions than by simply expressing the dominant colors (Munsell Soil Color Chart, 1992).

If the color charts are not being used or are unavailable, again attempt to assign general colors to soils. Comparing a particular soil sample to samples from different locations in the borehole will

help keep the eye "calibrated". For example, by holding two soils together, it may become evident that one is obviously greenish-brown, while another is reddish.

4.2.2 Consistency/Density

For intact fine-grained soil, describe consistency as very soft, soft, medium stiff, stiff, very stiff, or hard, based on the blows per foot using a 140 pound hammer dropped 30 inches (Table 5). If blow counts are not available, perform the field test described in Table 6 to determine consistency.

For coarse-grained soils, describe density based on blows per foot as very loose, loose, medium dense, dense, and very dense (Table 5). If blow counts are not available, attempt to estimate the soil density by observation, since a practical field test is not available. Be sure to clearly indicate on the field boring log if blow counts could not be obtained.

Table 5. Density/Consistency Based on Blow Counts

Density (Sand and Gravel) Blows/ft[a]				Consistency (Silt and Clay) Blows/ ft[a]			
Term	**1.4" ID**	**2.0" ID**	**2.5" ID**	**Term**	**1.4" ID**	**2.0" ID**	**2.5" ID**
Very Loose	0 – 4	0 – 5	0 – 7	Very Soft	0 – 2	0 – 2	0 – 2
Loose	4 – 10	5 – 12	7 – 18	Soft	2 – 4	2 – 4	2 – 4
Medium Dense	10 – 29	12 – 37	18 – 51	Medium Stiff	4 – 8	4 – 9	4 – 9
Dense	29 – 47	37 – 60	51 – 86	Stiff	8 – 15	9 – 17	9 – 18
Very Dense	>47	>60	>86	Very Stiff	15 – 30	17 – 39	18 – 42
				Hard	30 – 60	39 – 78	42 – 85
				Very Hard	>60	>78	>85

[a] 140 lb. Hammer dropped 30 inches

Table 6. Criteria for Describing Consistency

Description	Criteria
Very Soft	Thumb will penetrate soil more than 1 inch (25 mm)
Soft	Thumb will penetrate soil about 1 inch (25 mm)
Firm	Thumb will indent soil about ¼ inch (6 mm)
Hard	Thumb will not indent soil but readily indented with thumbnail
Very Hard	Thumbnail will not indent soil

4.2.3 Moisture

Describe the moisture condition of the soil as dry (absence of moisture, dusty, dry to the touch), moist (damp but no visible water), or wet (visible free water, saturated).

4.2.4 Grain Size

Describe the maximum particle size found in the sample in accordance with the following information:

- Sand-size—describe as fine, medium, or coarse. (See Section 2 for sand size definitions.)
- Gravel-size—describe the diameter of the maximum particle size in inches.
- Cobble or boulder-size—describe the maximum dimension of the largest particle.

For gravel and sand components, describe the range of particle sizes within each component. For example, "about 20 percent fine to coarse gravel, about 40 percent fine to coarse sand".

4.2.5 Odor

Due to health and safety concerns, **NEVER** intentionally smell the soil. This could result in exposure to volatile contaminants that may be present in the soil. If, however, an odor is noticed, it should be described if organic or unusual (e.g., petroleum product or chemical). Soils containing a significant amount of organic material usually have a distinctive odor of decaying vegetation (sometimes a hydrogen sulfide [rotten egg] smell). Organic vapor readings from a photoionization detector (PID) or similar instrument should be noted on the field boring log (Note: see SOP-39 for additional information on PID principles and procedures.). The project-

specific health and safety plan should then be consulted to determine the appropriate level of protection necessary to continue field work.

4.2.6 Cementation

Describe the cementation of intact coarse-grained soils as weak, moderate, or strong, in accordance with the following criteria:

- Weak—crumbles or breaks with handling or little finger pressure
- Moderate—crumbles or breaks with considerable finger pressure
- Strong—will not crumble or break with finger pressure

The presence of calcium carbonate may be confirmed on the basis of effervescence with dilute hydrochloric acid (HCl) if calcium carbonate or caliche is believed to be present in the soil. Proper health and safety precautions must be followed when mixing, handling, storing, or transporting HCl. For further information, see I/HW Health and Safety Procedure 630.24, "Procedure for Hydrochloric Acid Handling for Soil Logging."

4.2.7 Angularity

The angularity of the sand (coarse sizes only), gravel, cobbles, and boulders, as angular, subangular, subrounded, or rounded are described in accordance with the following criteria:

- Angular particles have sharp edges and relatively planar sides with unpolished surfaces.
- Subangular particles are similar to angular description but have rounded edges.
- Subrounded particles have nearly plane sides but have well-rounded corners and edges.
- Rounded particles have smoothly curved sides and no edges.

A range of angularity may be stated, such as "subrounded to rounded."

4.2.8 Structure

Describe the structure of intact soils in accordance with the criteria in Table 7.

Table 7. Criteria for Describing Structure

Description	Criteria
Stratified	Alternating layers of varying materials or color with layers at least 6 mm thick; note thickness
Laminated	Alternating layers of varying materials or color with the layers less than 6 mm thick; note thickness
Fissured	Breaks along definite planes of fracture with little resistance to fracturing
Slickensided	Fracture planes appear polished or glossy, sometimes striated
Blocky	Cohesive soil that can be broken down in small angular lumps that resist further breakdown
Lensed	Inclusion of small pockets of different soils, such as small lenses of sand scattered through a mass of clay; note thickness
Homogenous	Same color and appearance throughout

4.2.9 Lithology

Describe the lithology (rock or mineral type) of the sand, gravel, cobbles, and boulders, if possible. It may be difficult to determine the lithology of fine and medium-grained sand or particles that have undergone alteration.

4.2.10 Additional Comments

Additional comments may include the presence of roots or other vegetation, fossils or organic debris, staining, mottling, or oxidation; difficulty in drilling, and caving or sloughing of the borehole walls. Also, when drilling in an area known or suspected to contain imported fill material, every effort should be made to identify the contact between fill and native soils. If a soil is suspected to be fill, this should be clearly indicated on the log following the soil description. Stratigraphic units and their contacts should be noted wherever possible.

4.2.11 Bedrock Descriptions

If the soil boring penetrates bedrock, the boring log should indicate the rock type, color, weathering, fracturing, competency, mineralogy, age (if known), and any other miscellaneous information available. Definitions of these terms are not included in this SOP, because only a small percentage of drilling activities conducted by BRC Contractors for BRC penetrate bedrock. If bedrock drilling is planned, the field team leader, with the concurrence of the project

manager, makes arrangements to provide the field team with appropriate definitions and indicate the types with information that should be collected.

4.3 Additional Boring Log Information

The boring log form (example shown in Attachment 2) should be used unless a different form is required by the client. Information in the log heading should be complete and accurate. In addition to soil descriptions, the following information should be included, at a minimum:

- Boring or monitoring well number
- Project name and job number
- Site name
- Name of individual who logged the boring
- Name of boring log reviewer
- Drilling contractor
- Drill rig type and method of drilling (for example, "CME 75, hollow stem auger")
- Name of drilling company
- Name of driller and helper
- Borehole diameter and drill bit type
- Type of soil sampler (for example, Modified California, continuous core, etc.)
- Time and date that drilling started and finished
- Time and date that the well was completed or the soil boring backfilled, as appropriate
- Method of borehole abandonment
- Sketch map of boring or well location with estimated distances to major site features such as property lines or buildings, and north arrow

Soil sample information should include the depth interval that was sampled, the blow counts per 6 inches, the amount of soil recovered, and the portion submitted for analysis or testing, if any. The sample identification number may also be noted on the log.

The degree to which soil samples are collected during a field effort depends on the overall scope and purpose of the investigation, which should be clearly defined before the field effort commences. Additional soil samples may need to be collected if, for example, soils are very heterogeneous or unexpected conditions such as perched water zones or zones of contamination are encountered.

If groundwater is encountered during drilling, the depth to water and the time and date of the observation should be recorded. If the first water encountered is a perched zone, the depth, time, and date that any additional groundwater zones are encountered should also be recorded. Depth to water after drilling, the measuring point, and the date and time of the measurement(s) must be noted. Additional measurements of depth to groundwater, including depth and time, may be beneficial.

If a monitoring well is installed, the construction details such as casing material type, screen length and slot size should be noted on the boring log. The annulus fill material (sand pack, bentonite, grout, etc.) should also be recorded.

If the soil boring is abandoned, the backfill material used (e.g., grout, bentonite, etc.) and volume used, should be recorded on the boring log.

5.0 OTHER APPLICABLE SOPs

Several other BRC SOPs contain information related to soil boring and logging activities. The following is a list of these SOPs:

Drilling Methods
Monitoring Well Design and Installation
Sample Management/Preservation
Soil Sampling
Trenching and Test Pitting
Field Documentation
Site Logbook

6.0 REFERENCES

ASTM, 2000, Standard D2488-00 Standard Practice for Description and Identification of Soils (Visual-Manual Procedure).

ATTACHMENT 1
FIELD CLASSIFICATION GUIDES

FIELD GUIDE

MWH
MONTGOMERY WATSON HARZA

ORDER OF DESCRIPTION

1. Soil group name 2. USCS symbol 3. Color 4. Density/Consistency 5. Moisture
6. Grain size (sands and gravels) 7. Cementation 8. Odor 9. Miscellaneous

EXAMPLE DESCRIPTION

Poorly-graded sand with gravel (SP), light brown, loose, moist, predominantly fine sand, trace medium sand, 20% fine g ravel, hydrocarbon odor and staining

UNIFIED SOIL CLASSIFICATION SYSTEM

1 2

COARSE-GRAINED SOILS <50% passes #200 sieve	GRAVELS <50% coarse fraction passes #4 sieve	GRAVELS with little or no fines	Well-graded gravels, gravel-sand mixtures, little or no fines	GW
			Poorly-graded gravels, gravel-sand mixtures, little or no fines	GP
		GRAVELS with 15 fines	Silty gravels, poorly-graded gravel-sand-silt mixtures	GM
			Clayey gravels, poorly-graded gravel-sand-clay mixture	GC
	SANDS 50% coarse fraction passes #4 sieve	SANDS with little or no fines	Well-graded sands, gravelly sands, little or no fines	SW
			Poorly-graded sands, gravelly sands, little or no fines	SP
		SANDS with 15% fines	Silty sands, poorly-graded sand-gravel-silt mixtures	SM
			Clayey sands, poorly-graded sand-gravel-clay mixtures	SC
FINE-GRAINED SOILS 50% passes #200 sieve	SILTS AND CLAYS liquid limit <50		Inorganic silts and very fine sands, silty or clayey fine sands, silts with slight plasticity	ML
			Inorganic clays of low to medium plasticity, gravelly clays, sandy clays, silty clays, lean clays	CL
			Organic silts and clays of low plasticity	OL
	SILTS AND CLAYS liquid limit >50		Inorganic silts, micaceous or diatomaceous fine sand or silt	MH
			Inorganic clays of high plasticity, fat clays	CH
			Organic silts and clays of medium-to-high plasticity	OH
HIGHLY ORGANIC SOILS			Peat, humus, swamp soils with high organic content	PT

NOTE: W ell-graded (wide range of grain size) = poorly sorted; poorly-graded (predominantly one grain size) = well sorted

3 **COLOR** Assign color using Munsell Soil Color Chart (1992) if possible

4 **DENSITY** (Sands and gravels)

Term	Blo w/ft* 1.4"ID	2.0"ID	2.5"ID
very loose	0-4	0-5	0-7
loose	4-10	5-12	7-18
medium dense	10-29	12-37	18-51
dense	29-47	37-60	51-86
very dense	>47	>60	>86

SOIL TYPE MODIFIERS

Sand/Gr Term	% fines	avel Silt/Cla T	erm	y % fines
trace	<5	tr	ace	<5
with	5-15	with		15-30
clayey/silty	15	sandy/g	ravelly	30

CONSISTENCY (Silts and clays)

Term	Blo w/ft* Field 1.4"ID	2.0"ID	2.5"ID	Test (when b low counts not available)
very soft	0-2	0-2	0-2	Easily penetrated several inches by thumb; exudes between thumb and finger when squeezed
soft	2-4	2-4	2-4	Easily penetr ated one inch by thumb; molded by light finger pressure
medium stiff	4-8	4-8	4-8	Penetrated over 1/2 inch by thumb with moderate effort; molded by strong finger pressure
stiff	8-15	9-17	9-18	Indented b y 1/2 inch by thumb but penetrated only with great effort
very stiff	15-30	17-39	18-42	Readily indented b y thumbnail
hard	30-60	39-78	42-85	Indented with difficuty b y thumbnail
very hard	>60	>78	>85	

* = 140 pound hammer dropped 30 inches

MISCELLANEOUS

Plasticity (if applicable)
Organics, carbon, vegetation
Structure (e.g., layering)
Coloration (staining, oxidation, mottling)
Lithology (e.g., quartz)
Degree of rounding/angularity
Str atigraphic unit (if known)
Dr illing rate
Rig beha viour
Hea ving sands
Loss of dr illing fluid
Ca ving/sloughing
Depth to first w ater (time and date)
Depth to w ater after drilling (time and date)

GeoFldGd QA-QC 06-01

5 MOISTURE CONTENT

Term Field	Test
Dry Absence of moisture	, dusty, dry to the touch
Moist Damp b	ut no visible water
Wet Visib	le free water

6 GRAIN SIZE

Term Sie	ve size Gr	ain size Appro	ximate size
Boulders 12 inches	>12 inches	Larger than bask	etball-size
Cobbles 3-12 inches	3-12 inches	Fist-siz	e to basketball-size
Gravel - Coarse 3/4-3 inches	3/4-3 inches	Thumb-siz	e to fist-size
Fine #4-3/4 inches	0.19-0.75 inches	P	ea-size to thumb-size
Sand - Coarse #10-#4	0.079-0.19 inches	Roc	k salt-size to pea-size
Medium #40-#10	0.017-0.079 inches	Sugar-siz	e to rock salt-size
Fine #200-#40	0.0029-0.017 inches	Flour-siz	e to sugar-size
Fines P	assing #200 <0.0029 inches	Flour-siz	e and smaller

7 CEMENTATION

Term Field	Test
Weak Cr	umbles or breaks with handling or slight finger pressure
Moderate Cr	umbles or breaks with considerable finger pressure
Strong Will not cr	umble or break with finger pressure

PLASTICITY

Nonplastic A1/8 inch (3mm) thread cannot be rolled at an	y water content
Low	The thread can barely be rolled and the lump cannot be formed when drier than the plastic limit
Medium The thread is easy to roll and not m	uch time is required to reach the plastic limit. The thread cannot be rerolled after reaching the plastic limit. The lump crumbles when drier than the plastic limit
High It tak	es considerable time rolling and kneading to reach the plastic limit. The thread can be rerolled se veral times after reaching the plastic limit. The lump can be formed without cr umbling when drier than the plastic limit

ROCK CLASSIFICATION

Rock name Color	W	eathering F	racturing Competency	Miner	alogy Miscellaneous

CONVERSIONS

Multiply b	y to Obtain
in 2.54	cm
ft 0.3048	m
mi 1760	yd
mi 5280	ft
mi 1.6093	km
cm 0.3937	in
cm 3.2808 E-2	ft
m 3.2808	ft
km 0.6214	mi
cu ft 2.8317 E-2	cu m
gal 3.7850 E-3	cu m
cu ft 7.4813	gal
quart 0.9464	liter
gal 3.7854	liter
liter 0.2642	gal

Sch 40 PVC CASING VOLUMES

Diameter (in)	V olume (gal/ft)
2	0.17
4	0.66
6	1.50

BORING VOLUMES

Hole dia. (in)	V olume (gal/ft)
7.25	2.14
7.75	2.45
8.25	2.78
10.25	4.29
12.25	6.1 3

WELL VOLUME CALCULATION EXAMPLE

Well volume = Annular volume + Casing volume

Annular volume = (Boring volume - Casing volume x Sand pack porosity

EXAMPLE

Assume 10.25 in dia hole 4 in dia casing

30% sand pack porosity, 8 ft water column

Annular volume = (4.29 gal/ft - 0.66 gal/ft) x .30 x 8 ft = 8.71 gal/ft

Casing volume = 0.66 gal/ft x 8 ft = 5.28 gal/ft^2

One well volume = 8.71 gal = 5.28 gal = 13.99 gal

MWH
MONTGOMERY WATSON HARZA

INCHES (tenths) 1 2 3 4 5 6 7
(Add 1 inch)

ATTACHMENT 2
EXAMPLE BORING/LITHOLOGIC LOG FORM

Site Sketch Map	Boring #: MW#: Sheet 1 of
	Project:
	Job #: Site:
	Logged By: Reviewed By:
	Drilling Contractor:
	Drill Rig Type/Method:
	Drillers Name:
	Borehole Diam./Drill Bit Type: Total Depth / Ref. Elev.
	Sampler Type:
Depth to 1st Water (▽): Time/Date:	Drill Start Time/Date: Drill Finish Time/Date:
Depth to Water After Drilling (▼): Time/Date:	Well Completion Time/Date:
Depth to other Water Bearing Zones:	Soil Boring Backfill Time/Date:

PID/OVA	Sample Interval	Recovered (in.)	Blow Counts / 6 in.	Retained for Analysis	Casing Type & Size	Annulus Filler	Depth (Feet)	USCS Soil Type	Soil Description	Estimated % Of: Gravel	Sand: Coarse	Sand: Medium	Sand: Fine	Silt/clay
							1							
							2							
							3							
							4							
							5							
							6							
							7							
							8							
							9							
							10							
							11							
							12							

QA/QC

Boring #: MW#: Project: Sheet of

PID/OVA	Sample Interval	Recovered (in.)	Blow Counts / 6 in.	Retained for Analysis.	Casing Type & Size	Annulus Filler	Depth (Feet)	USCS Soil Type	Soil Description	Gravel	Estimated % Of Sand: Coarse	Med.	Fine	Silt/Clay
							2							
							3							
							4							
							5							
							6							
							7							
							8							
							9							
							0							
							1							
							2							
							3							
							4							
							5							
							6							
							7							
							8							
							9							
							0							
							1							
							2							

QA/QC

BASIC REMEDIATION COMPANY
STANDARD OPERATING PROCEDURES
BMI COMMON AREAS
CLARK COUNTY, NEVADA

SOP-18

SOIL SAMPLING FOR VOCS USING ENCORE™ SAMPLERS IN COMPLIANCE WITH USEPA METHOD 5035

STANDARD OPERATING PROCEDURES

SOP-18
SOIL SAMPLING FOR VOCS USING ENCORE™ SAMPLERS IN COMPLIANCE WITH USEPA METHOD 5035

TABLE OF CONTENTS

Section **Page**

1.0 INTRODUCTION 1

2.0 DEFINITIONS 2

3.0 RESPONSIBILITIES 3

4.0 BACKGROUND AND RATIONALE 4

5.0 APPLICABILITY 5
- 5.1 Analyses 5
- 5.2 Soil Type 5
- 5.3 Sample Volume Requirements 5
- 5.4 Sampling Method 5
- 5.5 Field Time Staffing and Scheduling 6

6.0 PROCEDURES 6
- 6.1 Preparation 6
- 6.2 Sample Collection 7
- 6.3 Sampler Capping 9
- 6.4 Sampler Locking 10
- 6.5 Labeling 10
- 6.6 Quality Control Samples 10
- 6.7 Packing and Shipping 11

7.0 REFERENCES 11

LIST OF FIGURES

Figure 1a Schematic Drawing, EnCore™ Sampler 2
Figure 1b EnCore™ Samplers, 5-gram and 25-gram 2
Figure 2a Schematic Drawing, EnCore™ T-Handle 3
Figure 2b EnCore™ T-Handle 3
Figure 3 T-Handle and Sampler in Locked Position 7
Figure 4a Inserting EnCore™ Sampler into Soil 8
Figure 4b Soil Core 8
Figure 5a Sample Capping Procedure 9
Figure 5b Capped Sampler 9
Figure 6 Sample Correctly Capped and Incorrectly Capped 10

DISCLAIMER

THE FOLLOWING STANDARD OPERATING PROCEDURE PROVIDES GENERAL GUIDANCE FOR BRC CONTRACTORS FOR TECHNICAL ISSUES ADDRESSED DURING ENVIRONMENTAL SITE INVESTIGATION AND REMEDIATION ACTIVITIES. IT IS NOTED, HOWEVER, THAT EACH SITE IS UNIQUE AND THESE GUIDELINES ARE NOT A SUBSTITUTE FOR COMMON SENSE AND GOOD MANAGEMENT PRACTICES BASED ON PROFESSIONAL TRAINING AND EXPERIENCE. IN ADDITION, INDIVIDUAL CONTRACT TERMS MAY AFFECT THE IMPLEMENTATION OF THIS STANDARD OPERATING PROCEDURE. BRC CONTRACTORS RESERVE THE UNRESTRICTED RIGHT TO CHANGE, MODIFY OR NOT APPLY THESE GUIDELINES IN THEIR SOLE, COMPLETE, AND UNRESTRICTED DISCRETION TO MEET CERTAIN CIRCUMSTANCES, CONTRACTUAL REQUIREMENTS, SITE CONDITIONS, OR JOB REQUIREMENTS.

1.0 INTRODUCTION

In 1997, the U.S. Environmental Protection Agency (USEPA) issued Update III to SW-846, "Test Methods for Evaluating Solid Waste." As part of this update, Method 5035, "Closed – System Purge-and-Trap and Extraction for Volatile Organics in Soil and Waste Samples," was issued, necessitating the update of field collection procedures for VOC analyses. This method is recognized for use in Resource Conservation and Recovery Act (RCRA) compliance testing, and Comprehensive Environmental Response, Compensation, and Liability Act (CERCLA) or "Superfund" sites.

Traditionally, soils and other samples have been collected and analyzed for volatile organic compounds (VOCs) predominantly using the "low-level" (0.5 – 200 µg/Kg) method described in SW-846 Method 5030 or 5030A (Update I). The physical disruption of the native soil structure that resulted during soil sampling exposed VOCs to open atmospheric conditions, giving rise to high analyte losses. The samples were transported and stored without any preservative measures other than to cool to 4 degrees Celsius prior to being opened for subsampling in preparation for heated purge-and-trap analyses by gas chromatography (GC) or GC/mass spectrometry (MS). Because storage temperature does not necessarily prevent biological degradation of aromatic VOCs, additional losses may have resulted for these and other compounds (USACE, 1998; USEPA, 1998).

To exacerbate matters, the sample handling procedures performed at the laboratory gave rise to additional VOC losses. For high-level (>200 µg/Kg) concentration samples analyzed using Method 5030 or 5030A, the laboratory could alternatively extract the samples with methanol, and subsequently analyze aliquots of methanol extracts after aqueous dilution, using the purge-and-trap procedure for aqueous samples. Methanol is an excellent preservative of VOCs; however, high VOC losses occurred because methanol was not added in the field at the time of collection (USACE, 1998; USEPA, 1998).

In accordance with Method 5035, the new "low-level" method for analyzing VOCs is performed by vapor partitioning using heated purge-and-trap; the "high-level" method is performed using methanol extraction. From an analytical perspective, the low-level method is still a direct analysis method by vapor partitioning and the high-level method still involves solvent extraction followed by a vapor-partitioning analysis technique. The revised methods predominantly differ with respect to the manner in which solid samples are collected and prepared for analysis.

The USEPA has provided two protocols for implementation of SW-846 Method 5035 to improve the integrity of soil samples to be analyzed for VOCs from collection through transportation to analysis. Protocol 1 employs EnCore™ samplers with no field weighing or preservation. Protocol 2 requires field weighing and several alternatives for field preservation, including methanol and sodium bisulfate. This Standard Operating Procedure (SOP) covers field sampling procedures associated with implementation of Protocol 1.

EnCore™ sample containers require less sample volume than capped sleeves or jars, require no field preservation, and minimize biodegradation and escape of VOCs. Use of the EnCore™ samplers avoids Department of Transportation (DOT) shipment issues and personnel exposure hazards related to the preservatives. It also reduces the potential for error introduction by contamination or imprecise weighing in the field.

This guideline provides a description of the principles of operation, applicability, and implementability of soil sampling using EnCore™ sampling tools. The purpose of this document is to aid in determining whether EnCore™ is appropriate for a given project and, if so, how best to implement it. It is intended to guide the project manager (PM), project engineer (PE), field team leader (FTL), site geologist and/or rig geologist in planning field work to meet project goals and in making field decisions.

2.0 DEFINITIONS

EnCore™ sampler: A disposable plastic soil coring device used for sampling, temporary storage, and shipment of soil samples for volatiles analyses (Figure 1a, 1b).

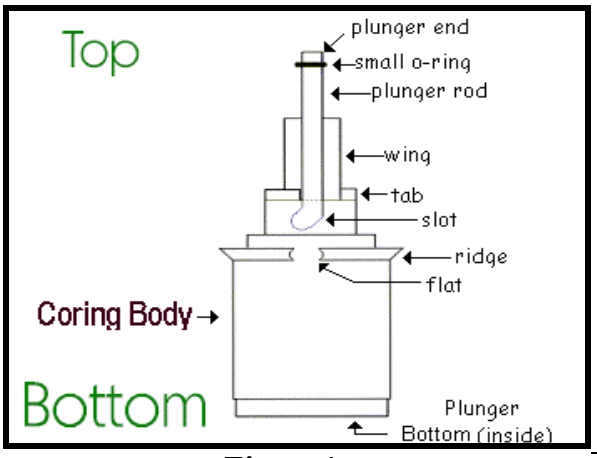

Figure 1a.
Schematic Drawing, EnCore™ Sampler

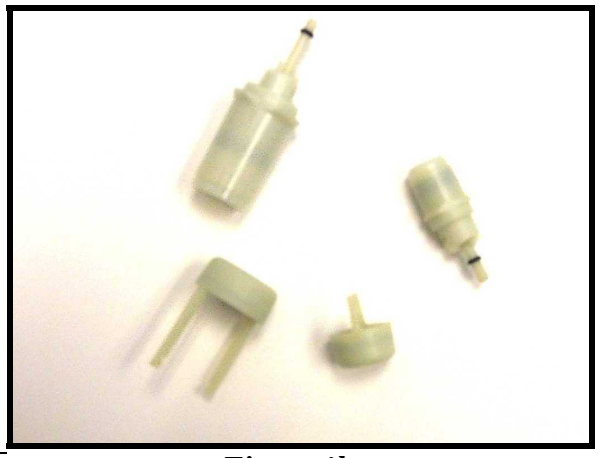

Figure 1b.
EnCore™ Samplers, 5-gram and 25-gram

EnCore™ T-handle: A stainless steel handle that grips the core body of an EnCore sampler so it can be pushed into and filled with minimally disturbed soil (Figure 2).

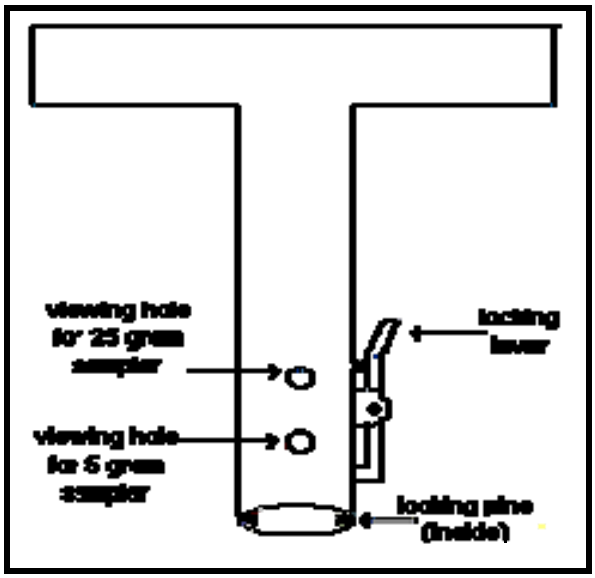

Figure 2a.
Schematic Drawing, EnCore™ T-Handle

Figure 2b.
EnCore™ T-Handle

Representative samples: Samples that represent all constituents at a certain depth interval. They do not represent undisturbed conditions. They are collected with a drive or push tube and/or an EnCore sampler.

TPH-gas: Total petroleum hydrocarbons as gasoline.

VOCs: Volatile organic compounds.

3.0 RESPONSIBILITIES

Project Manager or **Task Leader** (a qualified Nevada Certified Environmental Manager [C.E.M.]): Selects site specific soil sampling methods with input from the Field Team Leader and site geologist. Maintains close supervision of activities and progress of work.

Site Geologist: Selects site specific drilling/sampling options. Helps prepare technical provisions for drilling.

Field Team Leader: Implements selected drilling program. Aids in the selection of drilling methods.

Rig Geologist: Supervises and/or performs actual sampling procedures.

4.0 BACKGROUND AND RATIONALE

To minimize VOC losses, the sample collection and preparation procedures were dramatically modified for both low-level and high-level methods. Using Protocol 2 (field preservation), field personnel transfer samples immediately from the sampling tool into pre-weighed vials containing chemical preservatives (e.g., sodium bisulfate solution or methanol). The vials are weighed in the field before use and are subsequently re-weighed after the sample aliquots are added to obtain the net sample weights. Alternatively, to avoid weighing and preserving the samples in the field, samples for both the low-level and high-level methods may be collected and subsequently stored at 4°C without chemical preservation, for a maximum of 48 hours, using the EnCore™ sampler.

Experiments with several different soil types, several time and temperature combinations, and several volatile analytes have led to the following generalizations: 1) VOC concentrations decrease over time after sample collection, 2) freezing (-12° C) soil samples improves accuracy, and 3) variations in compound stability are more dependent on soil type and analytes than on storage conditions and time. If proper guidelines are followed, analytical results of samples collected in EnCore™ samplers closely resemble those of samples preserved in the field. These experiments showed VOCs remain stable for up to 14 days when frozen to -12°C in EnCore™ samplers. However, Method 5035 specifies a maximum 48-hour holding time between collection and extraction.

Additionally, samples of calcareous soils that effervesce on contact with sodium bisulfate preservation solution must be collected in a device such as the EnCore™ sampler. Disadvantages to the field preservation protocol include the DOT shipping regulations governing the preservatives, as well as the health and safety hazards these chemicals pose to field staff. Also, making sure sample containers are appropriately preserved, labeled, dry, and clean for weighing twice provides many opportunities for error introduction in the field. Acid preservatives will react with any carbonates in soil, rendering volatiles analyses results inaccurate. Field preservation also presents more opportunities for ambient air contamination. Protocol 2 (EnCore™ sampling) costs to ship preservatives and to provide staff familiar with laboratory procedures for the increased field time (up to 50%) required for weighing and preservation are significantly greater than the costs of the EnCore™ samplers and T-handles.

5.0 APPLICABILITY

EnCore™ samplers may be used to collect subsurface soil samples during drilling, trenching, and excavating, as well as to collect surface soil samples. The following factors should be considered when planning field work and assessing the applicability of this SOP.

5.1 Analyses

If the project includes any volatiles analysis of soil, using EnCore™ samplers may be appropriate. Analyses appropriate for EnCore™ samplers include VOCs and total petroleum hydrocarbons as gasoline (TPH-gas). For consistency, if both of these analyses are required, aliquots for each should be handled as similarly as possible. Also, if no other analyses are required, a separate aliquot must be collected for percent moisture analysis.

5.2 Soil Type

Soils should be predominantly medium-grained sand or finer in order to properly fill the EnCore™ samplers and to allow for a tight seal with no headspace. Gravelly soils, very coarse sands and soils with high organic content or peat will not properly fill the EnCore™ samplers and will prevent the caps from sealing tightly.

5.3 Sample Volume Requirements

Different laboratories have different soil volume requirements, which also vary according to detection limits set for the project and the analyses required. Coordinate with the laboratory early in the project to make sure enough EnCore™ samplers of the appropriate sizes are obtained and that volume requirements will not result in a single sample interval that is too long to meet project objectives. Depending on lithology, one to three 5-gram samplers can be filled from a single 6-inch-long sleeve within a time frame that will reasonably limit escape of VOCs.

5.4 Sampling Method

If soil samples are to be collected during drilling, drill cuttings should not be used for laboratory analysis. In situ conditions should be disrupted as little as possible before filling the EnCore™ sampler. Diameters of sleeves used in split-spoon or other down-hole sampling tools should be significantly larger than those of the selected EnCore™ samplers (5-gram and 25-gram). For example, a 25-gram EnCore™ sampler would be difficult to insert into a 1-inch-diameter sleeve.

If samples are to be collected from the bucket of an excavator, coordination with its operator is necessary. Minimize the time that elapses between bringing the bucket to the surface and filling the EnCore™ samplers from it.

If samples are to be collected directly from the ground surface, remove the uppermost soil with a knife until undisturbed soil is exposed, then quickly collect the sample.

5.5 Field Time Staffing and Scheduling

If both VOCs and TPH-gas analyses are required, the laboratory may require up to six EnCore™ samplers to be filled per sample. Filling six samplers can take 15 to 30 minutes, depending on the lithology. Labeling and packing the EnCore ™ samplers is also very time consuming. If samples are to be collected at five-foot intervals during drilling, for example, two people are recommended to handle sample collection and management in the field.

In all cases, but especially if samples are to be collected from the bucket of an excavator, EnCore™ samplers should be filled as quickly as possible to minimize volatilization. Careful coordination with the laboratory, especially near weekends and holidays, is necessary to ensure that samples are extracted within 48 hours of their collection.

6.0 PROCEDURES

6.1 Preparation

The following equipment should be assembled in advance of field work.

- Photoionization detector (PID) (Note: see SOP-39 for additional information on PID principles and procedures.)
- Table
- Teflon™ sheets
- Sleeves and caps (if drilling) or jars
- Nitrile gloves
- Safety glasses
- Ice and ice chest
- Sealable plastic bags
- Indelible marking pens
- Sample labels
- EnCore™ samplers
- EnCore™ T-handle
- Paper towels

Set aside the appropriate number and sizes of EnCore™ samplers and other containers required for each planned sample in advance to make sure all aliquots are collected. Put them on ice. If possible, complete the small sample labels (attached by perforated paper to the EnCore™ sampler pouches) with the appropriate sample numbers in advance, to minimize delays and confusion during drilling and sampling. Other labels, such as those to be affixed to the sample pouches, should also be completed as fully as possible in advance. Generic labels already attached to the pouches can be used if necessary.

Plan to do all paperwork during periods when soil to be sampled is not exposed to ambient air. Lithologic logging should be done after samples are collected, labeled, and packed in ice, for a given interval.

6.2 Sample Collection

Attach an EnCore™ sampler (either size) to the T-handle, first making sure the plunger can move freely inside the coring body, then placing the plunger bottom flush with the open end of the coring body. Insert the plunger end of the sampler into the open end of the T-handle, depressing its locking lever and aligning the locking pins with the slots on the coring body. Release the lever and rotate the coring body to lock the pins in the slots. Make sure the T-handle and sampler are locked together (Figure 3). Check the O-ring inside the sampler's cap. If it is displaced, the cap is defective and another cap must be used. Keep the cap within reach in a clean, dry area.

Figure 3.
T-Handle and Sampler in Locked Position

As soon as the split-spoon sampler, or other down-hole sampling tool, is withdrawn from the borehole, open it and quickly select the interval to be sampled. Collect aliquots for VOCs first, then TPH-gas, if required. Aliquots for volatiles analyses should be collected before those for any non-volatiles analyses.

To collect soil from a sleeve, place the sleeve upright with a Teflon™ sheet between it and the table. If more than a few seconds have elapsed since the sleeve was exposed to ambient air, scrape the uppermost soil out of the sleeve with a knife and discard it. Press the coring body, with the T-handle upward, into freshly exposed (but minimally disturbed) soil inside the sleeve (Figure 4a). Depending on the lithology of the soil being sampled, a few hundred pounds of pressure and several minutes may be required to fill the sampler. As the sampler is pushed into the soil, the soil pushes the plunger upward. The O-ring on the plunger rod will align with the center of the appropriate viewing hole on the T-handle when the sampler is full (Figure 1a, Figure 4b). If the sampler is the 5-gram size, the center of the lower viewing hole (T-handle upward, coring body down) is the full level. The center of the upper viewing hole represents the full level for the 25-gram sampler.

Figure 4a.
Inserting EnCore™ Sampler into Soil

Figure 4b.
Soil Core

To collect soil from a bucket, select the least-disturbed looking soil in the bucket, and push the sampler into it, following the same procedures as above.

To collect soil directly from the ground surface, remove the uppermost soil with a knife to expose undisturbed soil, then follow the same procedures as above.

Also, place some of the soil from each sampled interval into a plastic bag and seal it, leaving little head space. Make a small opening in the bag and insert the PID. Record the reading with the corresponding sample information on the chain-of-custody form.

6.3 Sampler Capping

When the sampler is full, pull the T-handle to withdraw the sampler from the sleeve and quickly remove excess soil from the end and outside of the coring body with a clean, dry paper towel. Cap the sampler, while it is still attached to the T-handle, by sliding the cap's locking arms through the flat areas of the sampler's ridges (Figure 5a). Then twist the cap so the grooves in the locking arms grip the ridges.

Figure 5a.
Sample Capping Procedure

Figure 5b.
Capped Sampler

Capping the sampler properly is important to ensure a tight seal to prevent escape of VOCs, but it is often difficult to fit the caps correctly onto the samplers. To make this easier, before capping, make sure the surface of the sampled soil is flat and does not extend beyond the open end of the sampler. Also, make sure the outside of the open edge of the coring body is clean. If, after these measures are taken, the cap is still uneven, firmly strike the table with the capped end

of the sampler until the grooves on both locking arms are completely over the ridges. Depress the locking lever on the T-handle and rotate it slightly to release the sampler (Figure 5b).

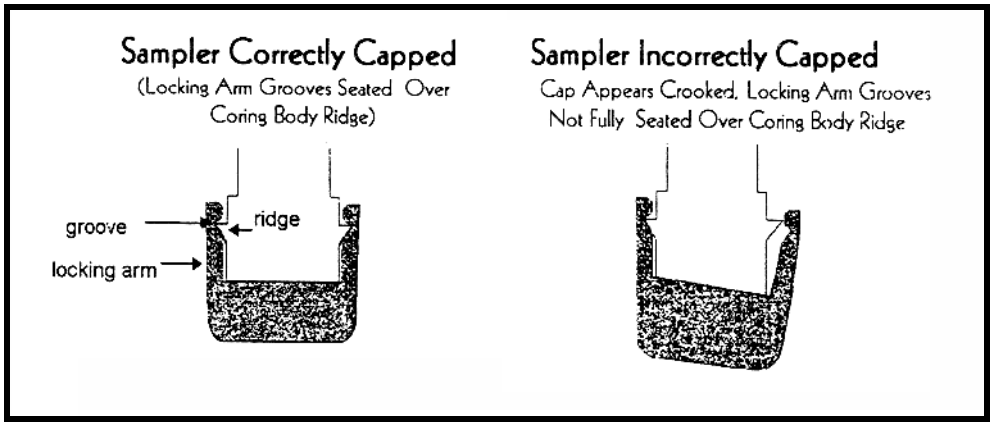

Figure 6.
Sample Correctly Capped and Incorrectly Capped

6.4 Sampler Locking

Slide the extended plunger rod through the holes in one arm of the T-handle until the wings of the plunger rod fit into the holes. Use the T-handle as a wrench to rotate the extended plunger rod until its wings rest firmly against the tabs. This keeps the plunger from pushing the soil against the cap during storage and shipment.

To continue sampling, expose a fresh soil surface on either end of the same or an adjacent sleeve, and repeat the procedure above, until all required aliquots for that sample are obtained. If aliquots for other analyses are required, either cap unused sleeves or fill other sample containers as appropriate. If no other analyses are planned, collect an aliquot for percent moisture analysis.

6.5 Labeling

Tear the completed small sample label from the mylar pouch along the perforations, and attach it to the cap of the sampler. Place the labeled sampler inside the pouch and seal it. Attach a completed sample label to the outside of the pouch, making sure the labels correspond to each other. Make sure the pouch is sealed.

6.6 Quality Control Samples

Duplicate samples, usually collected at a rate of one per 10 normal environmental samples, require a second set of EnCore™ samplers to be filled. For example, if a normal sample requires one 25-gram and two 5-gram samplers for VOCs, and one 25-gram and two 5-gram samplers for

TPH-gas, then its duplicate will also require four 5-gram and two 25-gram samplers to be filled. Every attempt should be made to fill these samplers from a co-located soil interval.

Matrix spike/matrix spike duplicate (MS/MSD) samples, usually collected at a rate of one per 20 normal environmental samples, will require triple volume. The above-described sample would require filling 12 5-gram and six 25-gram samplers, if it were an MS/MSD sample. Again, all of these samplers should be filled from soil intervals as close together as possible.

Other quality control samples, including trip blanks, ambient blanks, and equipment blanks, may be applicable and should be collected as called for in the project's Quality Assurance Program Plan.

6.7 Packing and Shipping

To avoid confusion, keep all filled, capped, locked, and labeled EnCore™ samplers (in their respective sealed pouches) for an individual sample together in a sealed plastic bag. Place each bag of EnCore™ pouches, along with other sample containers, in an ice-cooled chest (4° C). Use wet ice in double Ziploc™ bags (to prevent leakage) or dry ice, depending on site specific work plans and shipping requirements. Make sure the laboratory will receive and extract/preserve the samples within 48 hours of their collection.

7.0 REFERENCES

Koran, D. 1998. Memorandum for Record: Clarification for Sample Collection and Preparation Strategies for Volatile Organic Compounds (VOCs) in Solids.

McGee, N. 1999. Memorandum: Regional Interim Policy for Determination of Volatile Organic Compound (VOC) Concentrations in Soil and Solid Matrices, United States Environmental Protection Agency, Region IX, San Francisco, California, 7 pp.

Nebelsick, J. 1998. USACE Sample Collection and Preparation Strategies for Volatile Organic Compounds in Solids, United States Army Corps of Engineers, 22 pp.

Turiff, D., and Klopp, C. 1994. Studies of Sampling, Storage and Analysis of Soils Contaminated with Gasoline and Diesel *in* Various Authors, 1998. Soil Sampling for Volatile Organics: an overview of regulatory changes that minimize volatilization and biodegradation, Berkeley, California, proceedings.

Turiff, D., and Reitmeyer, C. 1998. Validation of Holding Times for the EnCore Sampler™, En Novative Technologies, Inc., Green Bay, Wisconsin, 35 pp.

USACE. 1998. USACE Sample Collection and Preparation Strategies for Volatile Organic Compounds in Solids. July.

U.S. Environmental Protection Agency (USEPA). 1987. A Compendium of Superfund Field Operations Methods, EPA/540/p-87/001

U.S. Environmental Protection Agency (USEPA). 1998. Clarification Regarding Use of SW-846 Methods, Memorandum from Elizabeth Cotsworth to RCRA Senior Policy Analysts, Attachment 1. August.

BASIC REMEDIATION COMPANY
STANDARD OPERATING PROCEDURES
BMI COMMON AREAS
CLARK COUNTY, NEVADA

SOP-19

BOREHOLE ABANDONMENT

STANDARD OPERATING PROCEDURES

SOP-19
BOREHOLE ABANDONMENT

TABLE OF CONTENTS

Section		Page
1.0	INTRODUCTION	1
2.0	DEFINITIONS	1
3.0	RESPONSIBILITIES	2
4.0	BOREHOLE ABANDONMENT	2

DISCLAIMER

THE FOLLOWING STANDARD OPERATING PROCEDURE PROVIDES GENERAL GUIDANCE FOR BRC CONTRACTORS FOR TECHNICAL ISSUES ADDRESSED DURING ENVIRONMENTAL SITE INVESTIGATION AND REMEDIATION ACTIVITIES. IT IS NOTED, HOWEVER, THAT EACH SITE IS UNIQUE AND THESE GUIDELINES ARE NOT A SUBSTITUTE FOR COMMON SENSE AND GOOD MANAGEMENT PRACTICES BASED ON PROFESSIONAL TRAINING AND EXPERIENCE. IN ADDITION, INDIVIDUAL CONTRACT TERMS MAY AFFECT THE IMPLEMENTATION OF THIS STANDARD OPERATING PROCEDURE. BRC CONTRACTORS RESERVE THE UNRESTRICTED RIGHT TO CHANGE, MODIFY OR NOT APPLY THESE GUIDELINES IN THEIR SOLE, COMPLETE, AND UNRESTRICTED DISCRETION TO MEET CERTAIN CIRCUMSTANCES, CONTRACTUAL REQUIREMENTS, SITE CONDITIONS, OR JOB REQUIREMENTS.

1.0 INTRODUCTION

Drilling is a common activity associated with all phases of environmental investigations. Drilling methods are most commonly used to collect site data during site investigations and remedial investigations, but are also used to install vapor extraction or water wells associated with remedial actions.

Field investigations usually require invasive types of activities to gather information to evaluate the site. The investigation may require the analysis of soil and/or groundwater samples which would be accomplished by drilling a borehole. Many times the borehole is converted into a well for the evaluation of vapor or groundwater conditions over time. In addition to the collection of samples for analyses, other data such as physical parameters of soils can be obtained from boreholes.

For determining the most appropriate drilling method for a site investigations, primary consideration must be given to obtaining information that is representative of existing conditions and the collection of samples that are valid for chemical analysis. The samples must not be contaminated or adversely affected by the drilling method.

Drilling associated with remedial actions may include the installation of vapor or water extraction and/or injection wells. In selecting the most appropriate drilling method for remedial actions, primary consideration must be given to completion of a well which will perform as designed.

This Standard Operating Procedure (SOP) provides a description of the borehole abandonment procedures used during field investigations for typical boreholes. This SOP is intended to be used by the Project Manager, Project Engineer, Field Team Leader, and site hydrogeologist to develop as general guidance for borehole abandonment procedures for BMI Common Areas work. The project specific sampling and analysis plans may have site-specific concerns which would require additional or adjustment to these procedures.

This document focuses on methods and equipment that are readily available and typically applied. It is not intended to provide an all inclusive discussion of borehole abandonment methods.

2.0 DEFINITIONS

None.

3.0 RESPONSIBILITIES

The **Project Manager** or **Task Leader** (a qualified Nevada Certified Environmental Manager [C.E.M.]) selects site-specific borehole abandonment methods with input from the Field Team Leader and Site Hydrogeologist, and maintains close supervision of activities and progress..

The **Site Hydrogeologist** selects site-specific drilling options. Helps prepare technical provisions for drilling.

The **Field Team Leader** implements selected drilling program. Aids in the selection of borehole abandonment methods.

4.0 BOREHOLE ABANDONMENT

A borehole that will not be converted into a well (for example, soil borings, test holes, and/or pilot holes) will be properly plugged and abandoned by methods approved by local and state regulatory agencies.

The boring will be abandoned by thoroughly mixing a sand-cement or cement-bentonite grout and pumping the grout to the bottom of the borehole through a tremie pipe until the borehole is filled to ground surface. Dry holes less than 10 feet deep can be filled with grout poured from the surface. The grout mixture may be either cement and water or some combination of cement, bentonite, sand, and water. Local or state agency criteria may require the grout plug to be completed several feet below the surface.

The grout will consist of clean water mixed with Type I or II Portland cement (or equivalent). It is also recommended that the grout include bentonite (3 to 5 percent by weight) to help reduce shrinkage. After the grout has been allowed to set at least 12 hours, the grout will be topped off if settlement has occurred.

Close attention will be paid to the mixture of the grout that is placed into the borehole. The recommended mixture will consist of one sack (94 pounds) of cement mixed with 7.2 to 8.5 gallons of clean water and 3 to 4 percent of bentonite. The optimum mix results in a volume of 1.5 to 1.6 cubic feet of slurry per sack of cement. The grout will be mixed to a smooth, uniform consistency with no lumps or balls present. It is best if the bentonite is mixed first, before adding the cement, to ensure that the bentonite is fully hydrated.

Under no circumstances, unless previously approved by the Nevada Division of Environmental Protection (NDEP), will the borings be backfilled with the soil removed during drilling and sampling operations.

Proper abandonment techniques for monitoring and other types of wells are dependent on site-specific circumstances and state (NDEP) requirements. Abandonment techniques may include, but not be limited to, removal of the well casing (for example, by pulling or by drilling out) followed by backfilling with cement/bentonite grout. The NDEP will be contacted for specific requirements, and the abandonment methods will be described in site-specific planning documents.

BASIC REMEDIATION COMPANY
STANDARD OPERATING PROCEDURES
BMI COMMON AREAS
CLARK COUNTY, NEVADA

SOP-20

FILTER PACK AND WELL SCREEN SLOT SIZE DETERMINATION

STANDARD OPERATING PROCEDURES

SOP-20
FILTER PACK AND WELL SCREEN SLOT SIZE DETERMINATION

TABLE OF CONTENTS

Section **Page**

1.0 INTRODUCTION 1

2.0 DEFINITIONS 1

3.0 RESPONSIBILITIES 3

4.0 FILTER PACK AND WELL SCREEN DESIGN 3
4.1 Naturally Developed Wells 4
4.2 Artificially Filter-Packed Wells 4

5.0 REFERENCES 7

DISCLAIMER

THE FOLLOWING STANDARD OPERATING PROCEDURE PROVIDES GENERAL GUIDANCE FOR BRC CONTRACTORS FOR TECHNICAL ISSUES ADDRESSED DURING ENVIRONMENTAL SITE INVESTIGATION AND REMEDIATION ACTIVITIES. IT IS NOTED, HOWEVER, THAT EACH SITE IS UNIQUE AND THESE GUIDELINES ARE NOT A SUBSTITUTE FOR COMMON SENSE AND GOOD MANAGEMENT PRACTICES BASED ON PROFESSIONAL TRAINING AND EXPERIENCE. IN ADDITION, INDIVIDUAL CONTRACT TERMS MAY AFFECT THE IMPLEMENTATION OF THIS STANDARD OPERATING PROCEDURE. BRC CONTRACTORS RESERVE THE UNRESTRICTED RIGHT TO CHANGE, MODIFY OR NOT APPLY THESE GUIDELINES IN THEIR SOLE, COMPLETE, AND UNRESTRICTED DISCRETION TO MEET CERTAIN CIRCUMSTANCES, CONTRACTUAL REQUIREMENTS, SITE CONDITIONS, OR JOB REQUIREMENTS.

1.0 INTRODUCTION

This guideline is applicable to the design and installation of permanent monitoring wells at BMI Common Areas. Details regarding design, construction, and installation of monitoring wells are provided in SOP-2, "Groundwater Monitoring Well Design and Installation." Each monitoring well must be designed to suit the hydrogeologic setting, the type of contaminants to be monitored, the overall purpose of the monitoring program, and other site-specific variables. Site-specific objectives for each monitoring well and its respective intended use must be clearly defined before the monitoring system is designed. Additionally, different monitoring wells may serve different purposes and thus require different types of construction. Therefore, attention must be given during all phases of well design to clear documentation of the basis for design decisions, the details of well construction, and the materials to be used. At many sites, there is a precedence as to well slot size and filter pack materials that have been used, and the time consuming process of performing a sieve analysis is not necessary for determining well design details.

2.0 DEFINITIONS

Absorption	The penetration or apparent disappearance of molecules or ions of one or more substances into the interior of a solid or liquid.
Adsorption	A process by which atoms, ions, or molecules are assimilated to the surface of a material Ion-exchange processes involve adsorption.
Annular Sealant	Material used to provide a positive seal between the borehole and the casing of the well. Annular sealants should be impermeable and resistant to chemical or physical deterioration.
Annular Space	The space between the borehole wall and the well casing, or the space between a casing pipe and a liner pipe.
Aquifer	A geologic formation, group of formations, or part of a formation that can yield water to a well or a spring.
Backwashing	A method of filter pack emplacement whereby the filter pack material is allowed to fall freely through the annulus while clean fresh water is simultaneously pumped down the casing.

Bentonite	Hydrous sodium montmorillinite mineral available in powder, granular, or pellet form. It is used to provide a tight seal between the well casing and the borehole.
Bridging	The development of gaps or obstructions in either grout or filter pack materials during emplacement.
Continuous Slot Wire-Wound Well Screen	A well intake that is made by winding and welding triangular-shaped, cold-rolled wire around a cylindrical array of rods. The spacing of each successive turn of wire determines the slot size of the well.
Corrosion	The adverse chemical alteration that reverts elemental metals back to more stable mineral compounds and that affects the physical and chemical properties of the metal.
Filter Pack	Sand, gravel, or glass beads that are uniform, clean, and well-rounded that are placed in the annulus of the well between the borehole wall and the well screen to prevent formation material from entering through the well intake and to stabilize the adjacent formation.
Grout	A fluid mixture of neat cement and water with various additives or bentonite of a consistency that can be forced through a pipe and emplaced in the annular space between the borehole and the casing to form an impermeable seal.
Monitoring Well	A well that is capable of providing a groundwater level and sample representative of the zone being monitored.
Naturally Developed Well	A well construction technique whereby the natural formation materials are allowed to collapse around the well intake and fine formation materials are removed using standard development techniques.
Neat Cement	A mixture of Portland cement and water in the proportion of 5 to 6 gallons of clean water per bag (94 pounds) of cement.
Piezometers	A small-diameter, nonpumping well used to measure the elevation of the water table or potentiometric surface.

Sieve Analysis	Determination of the particle-size distribution of soil, sediment, or rock by measuring the percentage of the particles that will pass through standard sieves of various sizes.
Slurry	A thin mixture of liquid, especially water, and any of several finely divided substances such as cement or clay particles.
Tremie Pipe	A device, usually a small-diameter pipe, which carries grouting materials or filter pack to the bottom of the borehole and that allows pressure grouting from the bottom up without introduction of appreciable air pockets.
Well Cluster	Two or more wells completed (screened) to different depths in a single borehole or in a series of boreholes in close proximity to each other. From these wells, water samples that are representative of different horizons within one or more aquifers can be collected.
Well Point	A sturdy, reinforced well screen or intake that can be installed by being driven into the ground.

3.0 RESPONSIBILITIES

The **Project Manager** or **Task Leader** (a qualified Nevada Certified Environmental Manager [C.E.M.]) selects the site-specific monitoring well design and installation methods, with input from the site hydrogeologist and field team leader, and maintains close supervision of activities and progress.

The **Site Hydrogeologist/Geologist** (a qualified Nevada C.E.M.) selects the site-specific drilling/sampling options and helps prepare technical provisions for the drilling.

The **Field Team Leader** implements the selected drilling program.

The **Drilling Rig Geologist** supervises and/or performs actual monitoring well installation.

4.0 FILTER PACK AND WELL SCREEN DESIGN

A properly designed monitoring well requires that a well screen be placed opposite the zone to be monitored and be surrounded by materials that are coarser and of greater hydraulic

conductivity than the natural formation material. Naturally developed wells and wells with artificially introduced filter pack are the two basic types of well designs for unconsolidated or poorly consolidated materials.

4.1 Naturally Developed Wells

In naturally developed wells, the formation materials are allowed to collapse around the well screen. Naturally developed wells can be installed in which natural formation materials are relatively coarse grained, permeable, and of uniform grain size. It is essential that the grain-size distribution of the formation to be monitored is accurately determined by conducting a mechanical (sieve) analysis of samples taken from the interval to be screened. After sieving, a plot of grain size versus cumulative percentage of sample retained on each sieve is made. Well screen slot sizes are based on the grain-size distribution, specifically the effective size (the sieve size that retains 90 percent of the formation material, referred to as D10) and the uniformity coefficient (the ratio of the sieve size that retains 40 percent of the material or D60, to the effective size). A naturally developed well can be justified if the effective grain size is greater than 0.010 inch and the uniformity coefficient is greater than 3.0. The California Department of Toxic Substances Control recommends that an artificial filter pack be used if sieve analysis indicates that a screen slot size of 0.020 inches or less is required to retain 50 percent of the natural formation. The biggest drawback for naturally developed wells is the time required for well development to remove fine-grained formation material.

4.2 Artificially Filter-Packed Wells

Filter packs are installed to create a permeable envelope around the well screen. The use of an artificial filter pack in a fine-grained formation material allows the screen slot size to be considerably larger than if the screen were placed in the formation material without the filter pack. The selection of the filter pack grain size should be based on the grain size of the finest layer to be screened.

Filter pack grain size and well screen slot size should be determined by the grain size distribution of the formation material. The filter pack should be designed first. It is recommended to use a filter pack grain size that is three to five times the average (D50) size of

the formation materials. However, this method may be misleading in coarse, well-graded formation materials. Another way to determine filter pack grain size is to take the D30 grain size of the formation materials and multiplying it by a factor of between 3 and 6, with 3 used if the formation is fine and uniform and 6 used if the formation is coarse and nonuniform. For both methods, the uniformity coefficient of the filter pack materials should be as close to 1.0 as possible (2.5 maximum) to minimize particle size segregation during filter pack installation.

The filter pack should extend from the bottom of the well screen to approximately 2 to 5 feet above the top of the screen to account for settlement of the pack material during development and to act as a buffer between the well screen and the annular seal. A secondary filter pack (transitions sand) is sometimes used to prevent annular grout seal materials from migrating into the primary filter pack. The secondary filter pack should extend at least 1 foot above the top of the primary filter pack. It should consist of a uniformly graded fine sand with 100% passing a No. 30 U.S. Standard sieve and less than 2 percent by weight passing the 200 sieve.

Filter pack thickness must be sufficient to surround the well screen but thin enough to minimize resistance to the flow of fine-grained formation material and water into the well during development. American Society of Testing and Materials (ASTM), Designation D 5092-90, recommends a minimum 2-inch thick filter pack between the borehole well and the well casing (ASTM, 1995).

The materials comprising the filter pack should be as chemically inert as possible. It should be comprised of clean quartz sand or glass beads. Filter pack materials usually come in 100-pound bags; these materials are washed, dried, and factory packaged.

The size of well intake openings can only be selected after the filter-pack grain size is specified. The slot size should be such that 90 percent to 100 percent of the filter-pack material is held back by the well screen.

The casing string should be installed in the center of the borehole. This will allow the filter-pack materials to evenly fill the annular space around the screen and ensure that annular seal materials fill the annular space evenly around the casing. If a hollow-stem auger or dual-tube rig is used,

the auger or inner tube of the dual tube will adequately centralize the casing string. For other types of drilling, centralizers should be used to ensure the casing string is positioned in the center of the borehole. Centralizers are typically expandable stainless steel metal or plastic that attach to the outside of the casing and are adjustable along the length of the casing. Centralizers are generally attached at the bottom and immediately above the well screen and at 10- or 20-foot intervals along the casing to the surface.

Methods for filter pack emplacement include: 1) gravity (free-fall), 2) tremie pipe, 3) reverse circulation, and 4) backwashing. The latter two techniques are not commonly used for monitoring well construction, since they require the introduction into the borehole of water from a surface source.

Gravity emplacement is only possible in relatively shallow wells with an annular space of more than 2 inches, where the potential occurrence of bridging is minimized. Bridging can result in the occurrence of large unfilled voids in the filter pack or the failure of filter pack materials to reach their intended depth. Gravity emplacement may also cause filter pack gradation. Additionally, formation materials from the borehole wall can become incorporated into the filter pack, potentially contaminating it.

With the tremie emplacement method, the filter pack is poured or slurried into the annular space adjacent to the well screen through a rigid pipe, usually 1.5 inches in diameter. Initially the pipe is positioned so that its end is at the bottom of the annulus. If the filter pack is being installed in a temporarily cased borehole (hollow-stem auger , dual-tube percussion, or air rotary casing hammer) the temporary casing is pulled to expose the screen as the filter-pack material builds up around the well screen. In unconsolidated formations, the temporary casing should only be pulled out 1 to 2 feet at a time to prevent caving. In consolidated or well-cemented formations or in cohesive unconsolidated formations, the temporary casing may be raised well above the bottom of the borehole prior to filter pack emplacement. For deep wells and/or nonuniform filter pack materials, the filter pack may be pressure fed through a tremie pipe with a pump. Emplacement should be continuously monitored with a weighted measuring tape accurate to the nearest 0.1 foot to determine when the filter pack has reached the desired height. After reaching the desired height, the well should be surged for 10-15 minutes, then checked for settling. Add

more filter pack as necessary. Record the volume of filter pack used and check against calculated volume of annular space. Most well designs also employ a "secondary" filter pack (transition sand) above the primary filter pack for purposes of reducing bentonite seal and grout migration into the primary filter pack. If applicable, care must be taken that the filter pack materials are not installed into a hydrostratigraphic unit above or below the specific zone that is targeted for monitoring.

5.0 REFERENCES

American Society for Testing and Materials, 1995. Standard Practice for Design and Installation of Ground Water Monitoring Wells in Aquifers, Designation D 5092-90.

BASIC REMEDIATION COMPANY
STANDARD OPERATING PROCEDURES
BMI COMMON AREAS
CLARK COUNTY, NEVADA

SOP-21

MONITORING WELL DESTRUCTION

STANDARD OPERATING PROCEDURES

SOP-21
MONITORING WELL DESTRUCTION

TABLE OF CONTENTS

Section **Page**

1.0 INTRODUCTION 1

2.0 DEFINITIONS 1

3.0 RESPONSIBILITIES 1

4.0 GENERAL 2

5.0 DESTRUCTION PROCEDURE 2

DISCLAIMER

THE FOLLOWING STANDARD OPERATING PROCEDURE PROVIDES GENERAL GUIDANCE FOR BRC CONTRACTORS FOR TECHNICAL ISSUES ADDRESSED DURING ENVIRONMENTAL SITE INVESTIGATION AND REMEDIATION ACTIVITIES. IT IS NOTED, HOWEVER, THAT EACH SITE IS UNIQUE AND THESE GUIDELINES ARE NOT A SUBSTITUTE FOR COMMON SENSE AND GOOD MANAGEMENT PRACTICES BASED ON PROFESSIONAL TRAINING AND EXPERIENCE. IN ADDITION, INDIVIDUAL CONTRACT TERMS MAY AFFECT THE IMPLEMENTATION OF THIS STANDARD OPERATING PROCEDURE. BRC CONTRACTORS RESERVE THE UNRESTRICTED RIGHT TO CHANGE, MODIFY OR NOT APPLY THESE GUIDELINES IN THEIR SOLE, COMPLETE, AND UNRESTRICTED DISCRETION TO MEET CERTAIN CIRCUMSTANCES, CONTRACTUAL REQUIREMENTS, SITE CONDITIONS, OR JOB REQUIREMENTS.

1.0 INTRODUCTION

Destruction of wells implies a permanent seal placed within the former well or borehole, while abandonment refers to discontinued use. This Standard Operating Procedure (SOP) relates to the procedure to destroy permanent monitoring wells. Each monitoring well must be destroyed to suit the hydrogeological setting, the type of contaminants of concern, the overall purpose of the program, and other site-specific variables. As such, site-specific objectives for each monitoring well must be clearly defined prior to abandoning the well. It is important to also refer to SOP-2, Groundwater Monitoring Well Design," regarding monitoring well installation, design, and construction prior to initiation of work.

2.0 DEFINITIONS

Hollow-stem auger	A drilling tool generally made of two pieces: an annular outer head attached to the bottom of the lead auger and an inner pilot or center bit mounted in a plug which is removable from the center of the auger to the surface. The removable inner plug is the primary advantage of this drilling method. Withdrawing the plug while leaving the auger in place provides an open, cased hole into which samplers, down-hole drive hammers, instruments, casing, wire, pipe, or numerous other items can be inserted. Replacing the center bit and plug allows for continuation of the borehole.
Tremie Pipe	A device, usually a small-diameter pipe, which carries materials (e.g., grout, sand, and bentonite) to the bottom of the borehole. Tremie pipes allow pressure grouting from the bottom up without introduction of appreciable air pockets.
Grout	Clean water mixed with Type I or II Portland cement or equivalent material. Grout is used to seal abandoned boreholes and the annular space between the well casing and borehole wall.

3.0 RESPONSIBILITIES

The **Project Manager** or **Task Leader** (a qualified Nevada Certified Environmental Manager [C.E.M.]) selects the site-specific monitoring well design, installation, and destruction methods with input from the site hydrogeologist and field team leader, and maintains close supervision of activities and work progress.

The **Site Hydrogeologist** (a qualified Nevada C.E.M.) selects the site-specific drilling and sampling options, and assists in the preparation of the technical provisions for drilling.

The **Field Team Leader or Superintendent** implements the selected drilling program.

The **Drilling Rig Geologist** supervises and/or performs actual monitoring well destruction.

4.0 GENERAL

When a decision is made to destroy a monitoring well, the borehole will be sealed so the well cannot act as a conduit for migration of contaminants from the ground surface to the water table or between aquifers. To properly destroy a well, the preferred method is to completely remove the well casing and screen from the borehole, drill out the borehole to remove all well construction materials, and backfill with a cement or bentonite grout, neat cement, or concrete. The appropriate state agency (Nevada Division of Environmental Protection [NDEP]) will be notified (if applicable) to comply with state well destruction requirements (e.g., a permit may be required prior to well destruction). However, some state requirements are not explicit and are open to interpretation, so a technically sound well destruction method will be designed based on the site geology, well casing materials, and general condition of the well.

5.0 DESTRUCTION PROCEDURE

After completing drilling and logging operations of an open borehole that will not be converted to a well (for example, soil borings, test holes, and/or pilot holes), the borehole must be properly plugged and abandoned as described in SOP-19, Borehole Abandonment.

The preferred method for abandoning a completed well is to first completely remove the well casing and screen from the borehole. This is done by augering with a hollow-stem auger over the well casing down to the bottom of the borehole, thereby removing the grout and filter pack materials from the hole. The well casing is then removed from the hole with the drill rig. The clean borehole is then backfilled with the appropriate grout material. This destruction method can be accomplished on shallow, small diameter (1- to 4-inch) wells without too much difficulty.

With wells having 6-inch or larger diameters, the use of hollow-stem augers for casing removal is very difficult to impossible. Instead of trying to ream the borehole with a hollow-stem auger, it is more practical to force a drill stem with a tapered wedge assembly or a solid-stem auger into the well casing and extract the casing from the borehole. Wells with sound casings or with little or no grouted annular space can be removed in this manner. However, a well with a badly corroded casing or thickly grouted annular space has a tendency to twist or break off in the borehole. If this occurs, the well will be grouted with the remaining casing left in place. The preferred method in this case is to pressure grout the well string by placing a tremie pipe to the bottom of the well casing. The pressurized grout will be forced through the well screen into the filter material and up the inside of the well casing, sealing any holes and breaks. The tremie pipe will be retracted slowly as the grout fills the casing. The well casing will be cut off from 0 to 5 feet below the ground surface and filled with concrete to a depth of 2 feet below the surface. If the casing has broken off below the surface, the grout will be tremied to within 2 feet of the surface, then finished to the ground surface with concrete. A surface pad or specified surface protection is then installed.

Well casings consisting of polyvinyl chloride (PVC) could be more difficult to remove from the borehole than metal casings because of PVC's brittleness. If the PVC well casing breaks during removal, the borehole will be cleaned out using a drag bit or roller-cone bit with a fluid rotary method to grind the casing into small cuttings that can be flushed out of the borehole by the selected drilling fluid. Another method is to use a solid-stem auger with a carbide auger head to grind the PVC casing into small cuttings. After the casing material has been removed from the borehole, the borehole will be cleaned out and grouted with the approved grouting materials. The borehole will be finished with a concrete surface plug and adequate surface protection, unless directed otherwise.

The grout used in destruction operations consists of clean water mixed with Type I or II Portland cement (or equivalent). It is also recommended that the grout include 3 to 5 percent bentonite (by weight) to help reduce shrinkage. After the grout has been allowed to set at least 12 hours, the abandoned boring should be checked to see if settling has occurred. If so, the open borehole should be filled with additional grout or some acceptable alternative material (such as concrete

or asphaltic concrete) so the final level of the sealing material is approximately flush with the ground surface.

Close attention must be paid to the water content of the grout placed into the borehole. The recommended amount for neat cement grout is one sack (94 pounds) of cement mixed with 5.5 to 6.5 gallons of clean water. The optimum mix results in a volume of 1.18 cubic feet of grout per sack. The grout is mixed to a smooth, uniform consistency without lumps. Particular attention will be paid to the first batch of grout mixed by a drilling subcontractor so that the provisions and mixtures listed previously are followed for subsequent boreholes. If bentonite is added to the grout, the amount of water per sack of cement is increased. The optimum water volume for 2 percent bentonite is 6.5 gallons; for 3 percent, 7.2 gallons; for 4 percent, 7.8 gallons; and for 5 percent bentonite, 8.5 gallons.

Under no circumstances will abandoned wells be backfilled with the soil removed during drilling and sampling operations without prior approval by the NDEP and compliance with local regulations.

Proper destruction techniques for monitoring and other types of wells are dependent on site-specific circumstances and local requirements. Destruction techniques may include, but not be limited to, removal of the well casing (by pulling or by drilling out) and cutting (or slicing) the well casing; followed by backfilling with cement/bentonite grout). NDEP will be contacted for specific requirements and these destruction methods will be described in site-specific planning documents.

BASIC REMEDIATION COMPANY
STANDARD OPERATING PROCEDURES
BMI COMMON AREAS
CLARK COUNTY, NEVADA

SOP-22

INSTALLATION OF TEMPORARY MONITORING WELLS

STANDARD OPERATING PROCEDURES

SOP-22
INSTALLATION OF TEMPORARY MONITORING WELLS

TABLE OF CONTENTS

Section **Page**

1.0 INTRODUCTION 1

2.0 DEFINITIONS 2

3.0 RESPONSIBILITIES 3

4.0 METHODS: INSTALLATION OF TEMPORARY WELLS 3
- 4.1 PowerPunch Temporary Wells 4
  - 4.1.1 Basic Operation of the PowerPunch Sampler 4
  - 4.1.2 Installation of the PowerPunch Sampler 4
- 4.2 Temporary Wells Installed in Boreholes 5

5.0 TEMPORARY WELL ABANDONMENT 5

DISCLAIMER

THE FOLLOWING STANDARD OPERATING PROCEDURE PROVIDES GENERAL GUIDANCE FOR BRC CONTRACTORS FOR TECHNICAL ISSUES ADDRESSED DURING ENVIRONMENTAL SITE INVESTIGATION AND REMEDIATION ACTIVITIES. IT IS NOTED, HOWEVER, THAT EACH SITE IS UNIQUE AND THESE GUIDELINES ARE NOT A SUBSTITUTE FOR COMMON SENSE AND GOOD MANAGEMENT PRACTICES BASED ON PROFESSIONAL TRAINING AND EXPERIENCE. IN ADDITION, INDIVIDUAL CONTRACT TERMS MAY AFFECT THE IMPLEMENTATION OF THIS STANDARD OPERATING PROCEDURE. BRC CONTRACTORS RESERVE THE UNRESTRICTED RIGHT TO CHANGE, MODIFY OR NOT APPLY THESE GUIDELINES IN THEIR SOLE, COMPLETE, AND UNRESTRICTED DISCRETION TO MEET CERTAIN CIRCUMSTANCES, CONTRACTUAL REQUIREMENTS, SITE CONDITIONS, OR JOB REQUIREMENTS.

1.0 INTRODUCTION

This procedure is applicable to the installation of temporary monitoring wells as they apply to site investigations. Temporary groundwater monitoring wells are installed at investigation sites when permanent groundwater monitoring wells are not required or are not feasible. Temporary monitoring wells differ from permanent monitoring wells in their less stringent standards for construction and development; and they may be sampled once or repeatedly over several months. However, like permanent monitoring wells, temporary monitoring wells must be designed to suit the hydrogeologic setting, the type of contaminants to be monitored, the overall purpose of the monitoring program, and other site-specific variables. During all phases of well design, attention must be given to clear documentation of the basis for design decisions, the details of well construction, and the materials to be used.

The following are examples of where temporary well installation can provide cost effective alternatives to permanent monitoring wells:

- At preliminary site investigations where limited historical information regarding the site is available. Screening level groundwater quality data can be obtained from temporary wells to indicate whether groundwater contamination is present at the site.
- As a part of Phase II Environmental Site Assessments when permanent monitoring wells are cost prohibitive or undesirable. In the case of potential real estate transactions the current or future owner(s) may not allow the installation of permanent monitoring wells.
- At sites where the sole purpose of the wells is to obtain water level elevation data for a limited time span, such as during pump tests or to obtain seasonal water level fluctuations.
- At sites where access agreements to install permanent monitoring wells cannot be obtained. Property owners may allow the installation of temporary wells as an alternative.
- Temporary wells can be a valuable tool to obtain information used to locate a permanent well array that will meet project objectives with the minimum number of wells.
- To obtain groundwater quality data when attempting to locate a source of a plume.
- To obtain groundwater quality data to evaluate whether or not natural attenuation processes are occurring in an area of known groundwater contamination.

2.0 DEFINITIONS

Annular Space	The space between the borehole wall and the well casing, or the space between a casing pipe and a liner pipe.
Bailer	A cylindrical tool designed to remove solid and liquid material from a well or borehole. A valve at the bottom of the bailer retains the material in the bailer. The three types of bailers include the flat-valve, the dart-valve bailer, and the sand pump with rod plunger.
Bentonite	Hydrous aluminum silicate available in powder, granular, or pellet form that is used to provide a seal between the well casing and the borehole.
Blow Count	The cumulative number of impacts of a 140-pound hammer dropped from a height of 30 inches applied to a sample spoon that is being driven into subsurface soils or rock. Blow counts are typically tallied for 6-inch intervals.
Borehole	The hole created by drilling or pushing an object through the subsurface.
Cone Penetrometer (CPT)	An instrument that identifies underground conditions by measuring the differences in the resistance and other physical parameters of the strata. The cone penetrometer consists of a conical point attached to a drive rod of smaller diameter, which is advanced by a drill rig.
Development	The process by which the well filter pack and surrounding natural formation are modified to decrease intake of particles into the well and to increase well production and water. Well development also removes soil particles from the well casing and screen. Typical well development methods include repeated well surging, bailing, and pumping.
Drive Point	The conical tip of the HydroPunch™ sampler that penetrates the subsurface as the sampler is advanced.
Drive Rod	The rigid rod that connects the stainless steel body of a HydroPunch™ sampler with the drill rig or CPT rig.
Filter Pack	Sand, gravel, or glass beads that are uniform, clean, and well-rounded that are placed in the annulus of the well between the borehole wall and the well intake to prevent formation material from entering through the well intake and to stabilize the adjacent formation.

HydroPunch™	A patented method of collecting groundwater samples using quickly installed and removed points hammered or hydraulically advanced to the water-bearing zone.
Monitoring Well	A well that is capable of providing a groundwater level and sample representative of the zone being monitored.
Power Punch	A patented method of collecting groundwater samples using a protective outer temporary casing to drive and install pre-packed well materials.
Piezometer	A groundwater monitoring well, sealed below the water table, for the specific purpose of determining the elevation of the potentiometric surface or the groundwater quality at some point within the saturated zone.
Well Screen	The section of well that is slotted or otherwise perforated to allow the intake of groundwater while excluding filter pack material

3.0 RESPONSIBILITIES

The **Project Manager** or Task (a qualified Nevada Certified Environmental Manager [C.E.M.]) selects site-specific temporary well design and installation methods, with input from the site hydrogeologist and field team leader, and maintains close supervision of activities and progress of work.

The **Site Hydrogeologist** (a qualified Nevada C.E.M.) selects site-specific installation and sampling options, and helps prepare technical provisions for drilling.

The **Field Team Leader** implements the temporary well installation and sampling program.

The **Drilling Rig Geologist** supervises and/or performs temporary well installation.

4.0 METHODS: INSTALLATION OF TEMPORARY WELLS

Downhole equipment and well components should be decontaminated in accordance with SOP-31 prior to installation. There are two types of temporary wells described in this Standard Operating Procedure (SOP): 1) PowerPunch temporary wells and 2) temporary wells installed in boreholes. Temporary monitoring wells installed in boreholes differ from permanent wells mainly in the degree to which the well is completed and the adherence to the standard well installation procedures described in SOP-02. The PowerPunch sampler is similar in design to that described in SOP-28 (HydroPunch™). The two types of temporary wells are discussed below.

Care must be taken to ensure that temporary wells do not serve as conduits for surficial contaminants to enter the subsurface if surficial seals are not a part of the well design.

4.1 PowerPunch Temporary Wells

PowerPunch groundwater samplers are installed in a method similar to that used for installing HydroPunch™ II samplers. The PowerPunch is recommended for use over HydroPunch™ or other direct push samplers if the point requires additional sampling, if use of the PowerPunch as a piezometer is required, or if slow or variable recharge conditions are expected. In the latter case, the PowerPoint sampler, unlike HydroPunch™, allows installation crews to continue to the next sampling location while the well is sampled.

4.1.1 Basic Operation of the PowerPunch Sampler

The PowerPunch sampler consists of a cylindrical, stainless steel body 5 feet long and 2 inches in diameter. A section of 3/4-inch polyvinyl chloride (PVC) flush-threaded well screen of desired length is fed through the stainless steel body and attached to an expendable, conical drive point. The screen section fits within the steel body so that the screen and attached drive point parts can telescope from the sample body. The screen and internal parts are sealed from the exterior by an O-ring seal at the base of the drive point when the PowerPunch is in the closed position. A steel drive rod is attached to the steel body, and the PowerPunch is driven to the desired sampling depth in the permeable zone. As the PowerPunch is advanced, flush-threaded PVC riser pipe is fed through the drive rods and attached to the screened section. When the PowerPunch is driven to the desired depth, the stainless steel body and drive rod are retracted and brought to the surface, leaving the drive point, screen, and riser pipe in the ground at the depth of furthest penetration. The well screen is thus exposed to the formation, allowing the water to enter the well. A bailer can then be lowered from the surface into the sampler body for sampling.

4.1.2 Installation of the PowerPunch Sampler

The PowerPunch sampler can be installed using either a conventional drill rig or a CPT rig. Used with a CPT rig, the PowerPunch sampler is attached to the CPT push rods and driven from the surface to depth using the hydraulic ram of the rig. CPT procedures are presented in SOP-11. Using a drill rig, the PowerPunch sampler can be attached to standard soil sampling drill rods and either driven to depth using a standard 140-pound hammer, or can be hydraulically driven into the bottom of a drilled borehole into the water-bearing zone. Generally, the PowerPunch sampler can be driven into formations using the hammer method without damaging the sampler

if blow counts do not exceed 30 per 6 inches. The PowerPunch should be driven into the water-bearing zone to a depth that allows the desired level of water in the well casing. Care should be taken to not retract the sample body prior to reaching the desired sampling depth. Filter packs are not typically installed in the annular space of the PowerPunch borehole.

4.2 Temporary Wells Installed in Boreholes

The minimum requirement for a temporary well is that it include a screened section of well casing installed in a borehole drilled into the water-bearing zone. Additional design features, such as filter pack and bentonite seal, as well as closer adherence to well construction and installation standards (as presented in SOP-02) will enhance the quality of investigation data. Post-installation activities such as well development and surveying the depth-to-water reference point will also enhance the value of the temporary well and associated data. The installation approach for temporary wells must take into account the intended overall goal of the sampling program and site-specific conditions. These will affect the degree to which the construction quality will approach that of a permanent monitoring well.

5.0 TEMPORARY WELL ABANDONMENT

Following final sample collection, the temporary well should be backfilled to the surface by grouting the entire depth of the well. SOP-19 and SOP-21 provide additional details on this procedure as they relate to temporary well abandonment. Consult Nevada Division of Environmental Protection (NDEP) abandonment requirements.

BASIC REMEDIATION COMPANY
STANDARD OPERATING PROCEDURES
BMI COMMON AREAS
CLARK COUNTY, NEVADA

SOP-23

SPLIT SPOON SAMPLING

STANDARD OPERATING PROCEDURES

SOP-23
SPLIT SPOON SAMPLING

TABLE OF CONTENTS

Section **Page**

1.0 INTRODUCTION 1

2.0 DEFINITIONS 1

3.0 RESPONSIBILITIES 1

4.0 SOIL SAMPLING 2
- 4.1 Types of Samples 2
  - 4.1.1 Bulk Samples 2
  - 4.1.2 Representative Samples 2
  - 4.1.3 Undisturbed Samples 2
  - 4.1.4 Composite Samples 2
- 4.2 Split-Spoon Samplers 2

LIST OF FIGURES

Figure 1 Typical Split Spoons 3

DISCLAIMER

THE FOLLOWING STANDARD OPERATING PROCEDURE PROVIDES GENERAL GUIDANCE FOR BRC CONTRACTORS FOR TECHNICAL ISSUES ADDRESSED DURING ENVIRONMENTAL SITE INVESTIGATION AND REMEDIATION ACTIVITIES. IT IS NOTED, HOWEVER, THAT EACH SITE IS UNIQUE AND THESE GUIDELINES ARE NOT A SUBSTITUTE FOR COMMON SENSE AND GOOD MANAGEMENT PRACTICES BASED ON PROFESSIONAL TRAINING AND EXPERIENCE. IN ADDITION, INDIVIDUAL CONTRACT TERMS MAY AFFECT THE IMPLEMENTATION OF THIS STANDARD OPERATING PROCEDURE. BRC CONTRACTORS RESERVE THE UNRESTRICTED RIGHT TO CHANGE, MODIFY OR NOT APPLY THESE GUIDELINES IN THEIR SOLE, COMPLETE, AND UNRESTRICTED DISCRETION TO MEET CERTAIN CIRCUMSTANCES, CONTRACTUAL REQUIREMENTS, SITE CONDITIONS, OR JOB REQUIREMENTS.

1.0 INTRODUCTION

For remedial investigations primary consideration must be given to obtaining samples that are representative of existing conditions and valid for chemical analysis. The samples must not be contaminated by drilling fluids or by the sampling procedures.

This guideline provides a description of the principles of operation, applicability, and implementability of standard split spoon sampling methods used during remedial investigations. The purpose of this document is to aid in the sampling of soils using split spoon technique when appropriate for site specific conditions. It is intended to be used by the project manager, project engineer, field team leader, and site geologist to develop an understanding of the method sufficient to permit work planning, scheduling, subcontracting, and resource planning.

This guideline focuses on methods and equipment that are readily available and typically applied. It is not intended to provide an all-inclusive discussion of soil sampling methods. Sample types, samplers, and sampling methods are discussed.

2.0 DEFINITIONS

Blow Counts: Number of hammer blows needed to advance a split spoon sampler. Blow counts are usually counted in 6-inch increments.

VOCs: Volatile organic compounds.

3.0 RESPONSIBILITIES

The **Project Manager** selects site specific soil sampling methods with input from the field team leader and site geologist. Supervises activities and progress of work.

The **Site Geologist** (a qualified Nevada Certified Environmental Manager [C.E.M.]) selects site specific drilling/sampling options. Helps prepare technical provisions for drilling.

The **Field Team Leader** (a qualified Nevada C.E.M.) implements selected drilling program. Aids in the selection of drilling methods and preparation of subcontracts.

The **Rig Geologist** supervises and/or performs actual sampling procedures.

4.0 SOIL SAMPLING

4.1 Types of Samples

Four basic types of samples are collected in site investigation work: bulk samples, representative samples, "undisturbed" samples, and composite samples.

4.1.1 Bulk Samples

Bulk samples are generally a shovelful or trowelful of material taken from cuttings. There is usually significant uncertainty regarding which interval the cuttings represent. This type of sampling is rarely used and is the least accurate of the four basic sample types.

4.1.2 Representative Samples

Representative samples are collected with a drive or push tube. They do not represent undisturbed conditions but do represent all the constituents that exist at a certain interval.

4.1.3 Undisturbed Samples

"Undisturbed" samples are high-quality samples collected under strictly controlled conditions to minimize the structural disturbance of the sample. Undisturbed samples should be collected when all the presampling relationships need to be preserved. Every effort is made to avoid altering the sample during the sampling process. Undisturbed samples are generally required for geotechnical work and are rarely necessary to assess environmental quality.

4.1.4 Composite Samples

Composite samples are a blend or mix of sample material, usually combined from two or more stratigraphic intervals mixed in such a way as to represent the total borehole. Homogenized samples are samples that are composited over a discreet interval. For example, if a sample represented the 10- to 11.5-foot interval, the material from that interval would be mechanically blended before being put into the appropriate sample container. VOC samples are never composited or homogenized.

4.2 Split-Spoon Samplers

Split-spoon samplers are the most commonly used sampler for monitoring and geotechnical work and can be applied to a variety of drilling methods. Split-spoon samplers are usually made

out of steel or stainless steel. They are tubular in shape and are split longitudinally into two semi-cylindrical halves. They may be lined or unlined. Typical split spoons are shown in Figure 1.

Figure 1. Typical Split Spoons

Liners are made of brass, aluminum, stainless steel, or various synthetic materials. Split-spoon samplers are generally available in 2-, 2.5-, 3-, 3.5-, and 4-inch outside diameters (OD). Lengths range between 12 and 60 inches. The 18-inch long sampler is the most commonly used. Three 6-inch liners are commonly used with this sampler. Sixty-inch samplers are commonly used when continuous coring is necessary.

Driving (hammering) is the most common method of obtaining split-spoon samples up to 2.5 feet in length. For most sampling a 140-pound hammer is used. The hammer may either be at the ground surface or in-hole. A standard penetration test should be conducted in accordance with American Society for Testing and Materials (ASTM) D1586. Samples are collected from the split-spoon sampler by driving the sampler into undisturbed material beneath the bottom of the casing or borehole with a weighted hammer. The number of blow counts per 6-inch increment of total drive are recorded. An estimate of the density and consistency of the subsurface soils can be made from the relationships among the hammer weight, drop, and number of blows required to advance the split spoon in 6-inch increments.

If the sampler cannot be advanced 6 inches with a reasonable number of blows (usually about 50), then sampler refusal occurs and the sampling effort at that particular interval is terminated. If "auger refusal" has not occurred, the hole is advanced to the next sampling interval where another attempt at sample retrieval is made.

After the split-spoon sampler is retrieved from the borehole, it is opened and the soil in the sampler tip and sampler is screened in place for the presence of VOCs using an organic vapor detector. The soil in the sampler will then be inspected for obvious signs of contamination and for classification. If an adequate volume of sample has not been retrieved, additional sample shall be collected from a second sampler from the interval immediately below the preceding interval.

If VOCs are to be analyzed, the sample is to be immediately transferred into the appropriate sampling jars upon retrieval of the split spoon from the borehole. Following sample description the contents of the samples for non-VOC analyses shall be emptied into a stainless steel bowl and the sample shall be thoroughly blended before transfer into the sample jars. Care shall be taken to ensure that the sample collected is representative of the sample interval, and not slough material. All slough material shall be discarded. A representative sample shall be retained in an archive box.

BASIC REMEDIATION COMPANY
STANDARD OPERATING PROCEDURES
BMI COMMON AREAS
CLARK COUNTY, NEVADA

SOP-24

WIRELINE CORING

STANDARD OPERATING PROCEDURES

SOP-24
WIRELINE CORING

TABLE OF CONTENTS

Section **Page**

1.0 INTRODUCTION 1

2.0 DEFINITIONS 1

3.0 RESPONSIBILITIES 2

4.0 OPERATION OF WIRELINE CORING AND SAMPLING SYSTEMS 3

LIST OF FIGURES

Figure 1 Typical Wireline Coring Devices 3
Figure 2 Schematic View of Wireline Coring Device 3

DISCLAIMER

THE FOLLOWING STANDARD OPERATING PROCEDURE PROVIDES GENERAL GUIDANCE FOR BRC CONTRACTORS FOR TECHNICAL ISSUES ADDRESSED DURING ENVIRONMENTAL SITE INVESTIGATION AND REMEDIATION ACTIVITIES. IT IS NOTED, HOWEVER, THAT EACH SITE IS UNIQUE AND THESE GUIDELINES ARE NOT A SUBSTITUTE FOR COMMON SENSE AND GOOD MANAGEMENT PRACTICES BASED ON PROFESSIONAL TRAINING AND EXPERIENCE. IN ADDITION, INDIVIDUAL CONTRACT TERMS MAY AFFECT THE IMPLEMENTATION OF THIS STANDARD OPERATING PROCEDURE. BRC CONTRACTORS RESERVE THE UNRESTRICTED RIGHT TO CHANGE, MODIFY OR NOT APPLY THESE GUIDELINES IN THEIR SOLE, COMPLETE, AND UNRESTRICTED DISCRETION TO MEET CERTAIN CIRCUMSTANCES, CONTRACTUAL REQUIREMENTS, SITE CONDITIONS, OR JOB REQUIREMENTS.

1.0 INTRODUCTION

The purpose of this Standard Operating Procedure (SOP) is to provide a general overview of the uses and technology involved in wireline coring and sampling. This SOP focuses on the 94-mm wireline coring and sampling system developed by Christensen Mining Products (now Layne Christensen), a manufacturer of drilling equipment.

Wireline coring and sampling systems are used during drilling operations to efficiently retrieve soil samples and rock cores from the subsurface. The system can be used for depth-specific sampling or continuous sampling to fully characterize the subsurface stratigraphy or lithologic environment. Conventional core barrels and split spoon sampling devices require pulling the drill rod out of the hole to recover core samples after each run. Wireline systems are optimal for deeper borehole drilling because the core can be recovered without pulling the drill rods. Wireline coring eliminates rod assembly and disassembly before and after each sampling run, which is especially labor intensive in deep borehole drilling. The core and samples recovered by this system are relatively undisturbed and minimally affected by drilling fluids. The typical core barrel size is 5 feet long. Core bit size ranges from 1.175 inches to 8 inches outer diameter, while the inner diameter (actual sample diameter) size ranges from 0.75-inch to 5.875-inches.

2.0 DEFINITIONS

Borehole	The hole created by drilling through the subsurface.
Core Barrel	A steel tube used to collect rock core or sediment samples. As the core bit cuts through the sediments or rock the material is held in the core barrel as the borehole is advanced.
Drill or Core Rod	The rigid steel pipe used as a medium to lower and retrieve coring and sampling equipment down the borehole. The core bit can be attached to this pipe and is rotated by the rotary drive.
Drilling Fluids or Muds	Water, bentonite-based mud, or air can be used in the well drilling operation to remove cuttings from the borehole, clean and cool the core bit, reduce the friction between the drill rods and the borehole wall, and to stabilize the borehole.

Inner Barrel	Normally a 5-foot section of pipe tooled to be lowered or raised through the core rods which contains the cored material.
Outer Barrel	With the 94-mm wireline system, this steel piping serves to both cut downwards and to line the borehole walls to prevent hole collapse.
Overshot Tool	The tool that attaches to the inner barrel so the barrel may be lowered through the outer barrel or drill rods to the total depth of the borehole on the wireline cable. The overshot tool is designed to attach to, or release from, the inner barrel at depth.
Split-Spoon Sampler	A thick-walled steel tube split lengthwise that is used to collect soil samples. The sampler is commonly lined with metal sample sleeves and is driven, pushed, or downhole lowered by wireline to collect samples.
Wireline	The steel cable used to lower and retrieve coring and sampling equipment down the borehole.

3.0 RESPONSIBILITIES

The **Project Manager** or **Task Leader** (a qualified Nevada Certified Environmental Manager [C.E.M.]) selects site-specific drilling methods, with input from the Field Team Leader and Site Hydrogeologist, and maintains close supervision of activities and progress of work.

The **Site Hydrogeologist** (a qualified Nevada C.E.M.) recommends site-specific drilling options and assists with the technical provisions for drilling.

The **Field Team Leader** (a qualified Nevada C.E.M.) implements the selected drilling program and assists in the selection of drilling methods.

The **Drilling Rig Geologist** supervises drilling operations and collections of samples and corings.

4.0 OPERATION OF WIRELINE CORING AND SAMPLING SYSTEMS

The Christensen wireline coring and sampling system consists of a 94-millimeter diameter outer barrel that acts as a casing advancer to prevent hole collapse in unstable formations. An inner barrel is lowered into place within the outer barrel during advancement of the borehole. Typical wireline coring devices are shown in Figures 1 and 2.

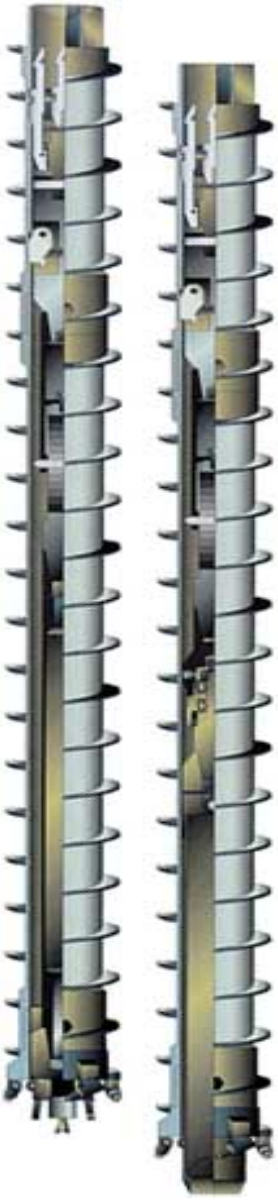

Figure 1 Typical Wireline Coring Devices

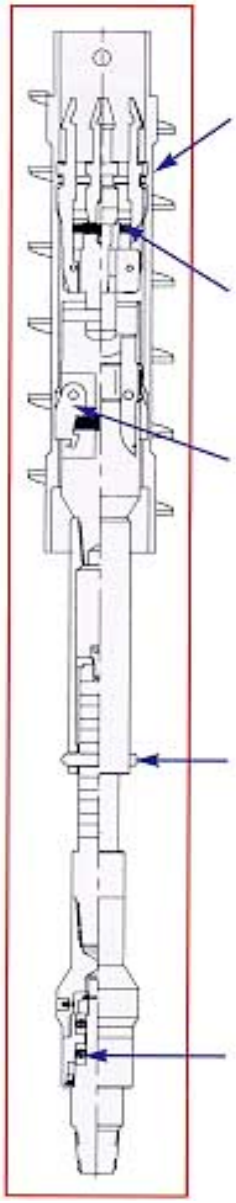

Figure 2 Schematic View of Wireline Coring Device

Depending on the subsurface material and the requirements of the job, there are three inner barrel configurations, as follows:

- An inner core barrel is used for coring consolidated rock material.
- A spring-retraction, or punch system inner barrel is used for sampling unconsolidated soils. This inner barrel includes a coil spring that positions the drive shoe 6 to 8 inches ahead of the bit. This allows the sampling of undisturbed soil samples with a split spoon relatively unaffected by drilling fluids
- A drill-ahead inner barrel is equipped with a cutting bit to drill ahead in those areas where a core or soil sample are not required.

The outer barrel and bit remain in the borehole while the inner barrel is lowered and raised in and out of the outer barrel by the wireline cable. The inner barrel is retrieved by lowering an overshot tool by wireline through the outer barrel onto latch assembly of the inner barrel. The overshot tool locks into place and compresses the inner barrel's latch fingers, thus releasing the inner barrel from the outer barrel. The overshot tool and attached inner barrel are reeled to the ground surface by the wireline cable.

When collecting environmental soil samples by wireline, the spring-retraction inner barrel and split spoon sampler pass through the drilling fluid as they are lowered to the bottom of the borehole. The drilling fluid comes into contact with the inner surfaces of the split spoon sampler. Because the spring-retraction inner tube advances the split spoon 6 to 8 inches forward of the outer barrel, drilling fluids are in contact with the sample only as the soil enters the split spoon and are not in continuous contact with the sample during borehole advancement. The result is a sample relatively free of washing or contact by drilling fluids. When the sample is retrieved and removed from the split spoon, the rig geologist scrapes away the thin film of drilling fluid that coats the surface of the sample. Careful attention should be paid to the possibility of an invasion of drilling fluid in the cored sample. This can be noted by splitting the sample with a cutting knife (unconsolidated soil) or rock hammer (consolidated rock). Filtered air can be used as a circulating fluid, which can eliminate contamination of the samples, but also may drive potential constituents of concern out of the sampled material.

BASIC REMEDIATION COMPANY
STANDARD OPERATING PROCEDURES
BMI COMMON AREAS
CLARK COUNTY, NEVADA

SOP-25

SHALLOW HAND AUGER SAMPLING

STANDARD OPERATING PROCEDURES

SOP-25
SHALLOW HAND AUGER SAMPLING

TABLE OF CONTENTS

Section **Page**

1.0 INTRODUCTION 1

2.0 DEFINITIONS 1

3.0 RESPONSIBILITIES 1

4.0 SOIL SAMPLING 2
- 4.1 Types of Samples 2
  - 4.1.1 Bulk Samples 2
  - 4.1.2 Representative Samples 2
  - 4.1.3 Undisturbed Samples 2
  - 4.1.4 Composite Samples 2
- 4.2 Shallow Hand Auger Sampling 3

LIST OF FIGURES

Figure 1 Typical Hand Auger 3

DISCLAIMER

THE FOLLOWING STANDARD OPERATING PROCEDURE PROVIDES GENERAL GUIDANCE FOR BRC CONTRACTORS FOR TECHNICAL ISSUES ADDRESSED DURING ENVIRONMENTAL SITE INVESTIGATION AND REMEDIATION ACTIVITIES. IT IS NOTED, HOWEVER, THAT EACH SITE IS UNIQUE AND THESE GUIDELINES ARE NOT A SUBSTITUTE FOR COMMON SENSE AND GOOD MANAGEMENT PRACTICES BASED ON PROFESSIONAL TRAINING AND EXPERIENCE. IN ADDITION, INDIVIDUAL CONTRACT TERMS MAY AFFECT THE IMPLEMENTATION OF THIS STANDARD OPERATING PROCEDURE. BRC CONTRACTORS RESERVE THE UNRESTRICTED RIGHT TO CHANGE, MODIFY OR NOT APPLY THESE GUIDELINES IN THEIR SOLE, COMPLETE, AND UNRESTRICTED DISCRETION TO MEET CERTAIN CIRCUMSTANCES, CONTRACTUAL REQUIREMENTS, SITE CONDITIONS, OR JOB REQUIREMENTS.

1.0 INTRODUCTION

For remedial investigations, primary consideration must be given to obtaining samples that are representative of existing conditions and valid for chemical analysis. This guideline provides a description of the principles of operation, applicability, and implementability of standard shallow hand auger sampling methods used during remedial investigations. Detailed information regarding conventional drilling methods is presented in SOP-1.

The purpose of this document is to aid in the selection of soil sampling methods and equipment that are appropriate for site-specific conditions. It is intended to be used by the project manager, project engineer, field team leader (FTL), and site geologist to develop an understanding of each method sufficient to permit work planning, scheduling, subcontracting, and resource planning.

This guideline focuses on methods and equipment that are readily available and typically applied. It is not intended to provide an all-inclusive discussion of soil sampling methods. Sample types, samplers, and sampling methods are discussed.

2.0 DEFINITIONS

VOCs	Volatile organic compounds.

3.0 RESPONSIBILITIES

The **Project Manager** or Task Leader ((a qualified Nevada Certified Environmental Manager [C.E.M.]) selects site-specific soil sampling methods, with input from the FTL and site geologist, and maintains close supervision of activities and progress.

The **Site Geologist** (a qualified Nevada C.E.M.) selects site-specific sampling options and helps prepare technical provisions for work.

The **Field Team Leader** implements the selected sampling program and assists in the selection of sampling methods.

The **Rig Geologist** supervises and/or performs actual sampling procedures.

4.0 SOIL SAMPLING

4.1 Types of Samples

Four basic types of samples are collected in site investigation work: bulk, representative, "undisturbed," and composite.

4.1.1 Bulk Samples

Bulk samples are generally a shovelful or trowelful of material taken from cuttings. There is usually significant uncertainty regarding which interval the cuttings represent. This type of sampling is rarely used and is the least accurate of the four basic sample types.

4.1.2 Representative Samples

Representative samples are collected with a drive or push tube. They do not represent undisturbed conditions but do represent all the constituents that exist at a certain interval.

4.1.3 Undisturbed Samples

"Undisturbed" samples are high-quality samples collected under strictly controlled conditions to minimize the structural disturbance of the sample. Undisturbed samples should be collected when all the presampling relationships need to be preserved. Every effort is made to avoid altering the sample during the sampling process. Undisturbed samples are generally required for geotechnical work and are rarely necessary to assess environmental quality.

4.1.4 Composite Samples

Composite samples are a blend or mix of sample material, usually combined from two or more stratigraphic intervals and mixed in such a way as to represent the total borehole. Homogenized samples are samples that are composited over a discreet interval. For example, if a sample represented the 10- to 11.5-foot interval, the material from that interval would be mechanically blended before being put into the appropriate sample container. VOC samples are never composited or homogenized.

4.2 Shallow Hand Auger Sampling

A hand auger typically cuts a hole 3 to 9 inches in diameter and, depending on the geologic materials, may be advanced to about 15 feet. Actual maximum depth depends on soil conditions, buried obstructions, and groundwater levels. Generally, the borehole cannot be advanced below the water table because the hole collapses. A typical hand auger is shown in Figure 1.

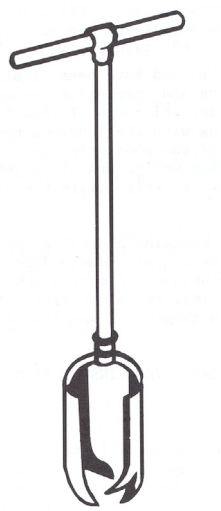

Figure 1 - Typical Hand Auger

Hand augers are generally used to collect samples in situations where conventional drilling and soil sampling equipment can not access the area of interest or would damage the ground surface. They may also be used when a limited number of samples are to be collected and the cost of mobilizing conventional drilling equipment is not justified.

Hand augers may be a one-piece design where the handle, extension rod, and auger head are permanently joined; or component design where the handle, extension rod, and auger head are screwed or pinned together. The component design allows additional extension rods to be added to achieve greater depth in the borehole. The component design also allows field personnel to attach various auger head styles appropriate for the soil type and conditions. Some typical auger head types and their recommended applications are listed below:

- **Standard Bucket**—The standard bucket auger head is a steel cylinder with cutting bits on the bottom and an arched brace on the top that attaches to the extension rod. The standard bucket auger is designed for general soils and retains the soil cuttings within the cylinder until removed from the borehole and emptied by field personnel.

- **Mud**—The mud auger head is similar to the standard bucket auger except that it has openings cut in the side of the cylinder for easier removal of heavy, wet soil and clay rich samples.

- **Sand**—The sand auger head is also similar to the standard bucket auger but the bits are designed to better hold dry and sandy soils while the auger is being removed from the borehole.

- **Planer**—A planer auger has bits that are nearly flush with the auger head. This head is not intended to advancing the borehole but is used to smooth the bottom and remove loose soil and debris left by the cutting heads.

- **Gouge**—Gouge augers have a half-cylindrical body designed for creating relatively undisturbed soils cores within the borehole.

- **Screw**—The screw-type auger head is similar to a typical auger-type drill bit. It does not have a cylinder for retaining cuttings or samples, and is intended primarily for creating small diameter holes.

- **Dutch**—The Dutch auger head also is used for advancing holes without recovering samples or cuttings. It is designed as a cutting head for advancing boreholes through wet, boggy soil and fibrous or heavily rooted soil.

Soil samples for geotechnical analyses should not be collected directly from a hand auger because the samples are disturbed. Hand auger samples for chemical analyses should be used with caution because the samples are generally disturbed and loss of VOCs may have occurred. Also, cross contamination of the sample may occur while inserting and removing the hand auger from the borehole. Samples for detailed chemical or geotechnical analyses should be taken with a sampling tool such as a drive sampler applied at the desired depth. For component hand augers, these types of sampling devices can be substituted for the auger head once the borehole has been advanced to the desired depth. The sampler can then be pushed or pounded into the undisturbed soil at the bottom of the borehole. However, the upper portion of the recovered sample should be discarded because it may be disturbed from the bit of the auger head or may contain debris that has fallen from the wall of the borehole. Samples for lithologic logging purposes may be taken directly from the hand auger.

As with traditional drilling and sampling, buried and overhead utilities must be located and appropriate separation distances observed prior to advancing a borehole with a hand auger.

Applications:

- Shallow soil investigations
- Soil samples
- Water-bearing zone identification
- Locations inaccessible by conventional drill rigs

Limitations:

- Limited to very shallow depths
- Unable to penetrate dense or rocky soil
- Borehole stability difficult to maintain
- Labor intensive

BASIC REMEDIATION COMPANY
STANDARD OPERATING PROCEDURES
BMI COMMON AREAS
CLARK COUNTY, NEVADA

SOP-26

SOIL GRAB SAMPLING

STANDARD OPERATING PROCEDURES

SOP-26
SOIL GRAB SAMPLING

TABLE OF CONTENTS

Section **Page**

1.0 INTRODUCTION 1

2.0 DEFINITIONS 1

3.0 RESPONSIBILITIES 1

4.0 SOIL SAMPLING 2
- 4.1 Types of Samples 2
  - 4.1.1 Bulk Samples 2
  - 4.1.2 Representative Samples 2
  - 4.1.3 Undisturbed Samples 2
  - 4.1.4 Composite Sample 3
- 4.2 Grab Sampling Methods 3
  - 4.2.1 Sampling Equipment Selection 3

DISCLAIMER

THE FOLLOWING STANDARD OPERATING PROCEDURE PROVIDES GENERAL GUIDANCE FOR BRC CONTRACTORS FOR TECHNICAL ISSUES ADDRESSED DURING ENVIRONMENTAL SITE INVESTIGATION AND REMEDIATION ACTIVITIES. IT IS NOTED, HOWEVER, THAT EACH SITE IS UNIQUE AND THESE GUIDELINES ARE NOT A SUBSTITUTE FOR COMMON SENSE AND GOOD MANAGEMENT PRACTICES BASED ON PROFESSIONAL TRAINING AND EXPERIENCE. IN ADDITION, INDIVIDUAL CONTRACT TERMS MAY AFFECT THE IMPLEMENTATION OF THIS STANDARD OPERATING PROCEDURE. BRC CONTRACTORS RESERVE THE UNRESTRICTED RIGHT TO CHANGE, MODIFY OR NOT APPLY THESE GUIDELINES IN THEIR SOLE, COMPLETE, AND UNRESTRICTED DISCRETION TO MEET CERTAIN CIRCUMSTANCES, CONTRACTUAL REQUIREMENTS, SITE CONDITIONS, OR JOB REQUIREMENTS.

1.0 INTRODUCTION

For remedial investigations, primary consideration must be given to obtaining samples that are representative of existing conditions and valid for chemical analysis. SOP-1, "Drilling Methods," contains specific procedures regarding drilling and sampling. The samples must not be contaminated by drilling fluids or by the sampling procedures.

This guideline provides a description of the principles of operation, applicability, and implementability of grab soil sampling methods used during remedial investigations. The purpose of this document is to aid in the selection of soil sampling methods that are appropriate for site specific conditions. It is intended to be used by the project manager, project engineer, field team leader (FTL), and site geologist to develop an understanding of each method sufficient to permit work planning, scheduling, subcontracting, and resource planning.

This guideline focuses on methods and equipment that are readily available and typically applied. It is not intended to provide an all-inclusive discussion of soil sampling methods. Sample types, samplers, and sampling methods are discussed.

2.0 DEFINITIONS

Blow Counts	Number of hammer blows needed to advance a split spoon sampler. Blow counts are usually counted in 6-inch increments.
VOCs	Volatile organic compounds

3.0 RESPONSIBILITIES

The **Project Manager** or **Task Leader** (a qualified Nevada Certified Environmental Manager [C.E.M.]) selects site-specific soil sampling methods with input from the FTL and site geologist, and maintains close supervision of activities and progress.

The **Site Geologist** (a qualified Nevada C.E.M.) selects site-specific drilling and sampling options and helps prepare technical provisions for drilling.

The **Field Team Leader** (a qualified Nevada C.E.M.) implements the selected drilling program and assists in the selection of drilling methods.

The **Rig Geologist** supervises and/or performs actual sampling procedures.

4.0 SOIL SAMPLING

4.1 Types of Samples

Four basic types of samples are collected in site investigation work: bulk, representative, "undisturbed", and composite. Each of these basic types of sampling approaches is discussed in the following sections.

4.1.1 Bulk Samples

Bulk samples are generally a shovelful or trowelful of material taken from drill cuttings. There is usually significant uncertainty regarding which interval the drill cuttings represent. This type of sampling is rarely used and is the least accurate of the four basic sample types.

4.1.2 Representative Samples

Representative samples are collected with a drive or push tube. They do not represent undisturbed conditions but do represent all the constituents that exist at a certain interval. This type of sampling is often used to discern an average representation of a certain interval and is moderately accurate.

4.1.3 Undisturbed Samples

"Undisturbed" samples are high quality samples collected under strictly controlled conditions to minimize the structural disturbance of the sample. Undisturbed samples should be collected when all the presampling relationships need to be preserved. Every effort is made to avoid altering the sample during the sampling process. Undisturbed samples are generally required for geotechnical work and are rarely necessary to assess environmental quality. This type of sampling is highly accurate.

4.1.4 Composite Samples

Composite samples are a blend or mix of sample material, usually combined from two or more stratigraphic intervals mixed in such a way as to represent the total borehole. Homogenized samples are samples that are composited over a discreet interval. For example, if a sample represented the 10- to 11.5-foot interval, the material from that interval would be mechanically blended before being put into the appropriate sample container. VOC samples are never composited or homogenized. Metals samples are often dried and sieved after homogenization before placement into the sample container. (See U.S. Environmental Protection Agency [USEPA] Soil Sampling Guidance EPA/540/R-96/018 for composite sampling procedures for specific metals.)

4.2 Grab Sampling Methods

An element in the design of an effective sampling strategy is the selection of appropriate sample types. Based on the desired analytical objectives of the sampling, analytical considerations, and available resources (for sampling and analysis), two basic types of samples—grab and composite—are commonly collected.

- **Grab**—a sample taken from a particular location. Most common type of sample collected. Useful in determining discrete spatial variability when multiple samples are collected.
- **Composite**— a number of samples that are individually collected and combined into a single sample for subsequent analysis. Used where average or normalized concentration estimates of a waste stream's or area's constituent are desired.

Chapter 9 of USEPA SW-846 has detailed procedures for determining the type technique for sampling waste streams. The sampling procedures are determined based on the physical characteristics of the site and matrix.

4.2.1 Sampling Equipment Selection

There are many different types of equipment used for sample collection. Seven of the most common types are composite liquid waste sampler (Coliwasa), weighted bottle, dipper, thief, trier, auger, scoops and shovels. In order to reduce the possibility of cross contamination of

samples, the appropriate decontamination procedure for each type of equipment must be followed. Listed below are the uses for these types of equipment:

- Coliwasa is used to sample free-flowing liquids and slurries contained in drums, shallow tanks, pits or similar containers. It is especially useful for wastes with several immiscible liquid phases. Coliwasa is used for composite sampling.
- Weighted bottles are used to sample liquids and free-flowing slurries.
- Dippers are used to sample liquids and free-flowing slurries.
- Thiefs are used to sample dry granules or powdered wastes whose particle diameter is less than one-third the width of the slots.
- Triers are used to sample moist or sticky solids with a particle size less than one-half the diameter of the trier.
- Augers are used to sample hard or packed solid wastes.
- Scoops and shovels are used to sample granular or powdered materials in bins and shallow containers.

Selection of the type of equipment used will be based on 1) limiting the possibility of cross contamination, 2) assuring comparability, 3) obtaining adequate sample volume, 4) ease of use, 5) limiting the degree of hazard during sample collection, and 6) limiting the cost of sample collection. A more detailed description of each type of equipment is presented in Chapter 9 of USEPA SW-846.

BASIC REMEDIATION COMPANY
STANDARD OPERATING PROCEDURES
BMI COMMON AREAS
CLARK COUNTY, NEVADA

SOP-27

STOCKPILE SAMPLING

STANDARD OPERATING PROCEDURES

SOP-27
STOCKPILE SAMPLING

TABLE OF CONTENTS

Section **Page**

1.0 INTRODUCTION 1

2.0 STOCKPILE CHARACTERIZATION 1
- 2.1 Stockpile History 1
- 2.2 Physical Properties of the Stockpile 2
- 2.3 Waste Properties 2
- 2.4 Problems 2

3.0 SAMPLING PLAN 3
- 3.1 Sampling Methods 4

4.0 SAMPLING EQUIPMENT 5

5.0 FURTHER READING/DOCUMENTATION 6

6.0 REFERENCES 6

DISCLAIMER

THE FOLLOWING STANDARD OPERATING PROCEDURE PROVIDES GENERAL GUIDANCE FOR BRC CONTRACTORS FOR TECHNICAL ISSUES ADDRESSED DURING ENVIRONMENTAL SITE INVESTIGATION AND REMEDIATION ACTIVITIES. IT IS NOTED, HOWEVER, THAT EACH SITE IS UNIQUE AND THESE GUIDELINES ARE NOT A SUBSTITUTE FOR COMMON SENSE AND GOOD MANAGEMENT PRACTICES BASED ON PROFESSIONAL TRAINING AND EXPERIENCE. IN ADDITION, INDIVIDUAL CONTRACT TERMS MAY AFFECT THE IMPLEMENTATION OF THIS STANDARD OPERATING PROCEDURE. BRC CONTRACTORS RESERVE THE UNRESTRICTED RIGHT TO CHANGE, MODIFY OR NOT APPLY THESE GUIDELINES IN THEIR SOLE, COMPLETE, AND UNRESTRICTED DISCRETION TO MEET CERTAIN CIRCUMSTANCES, CONTRACTUAL REQUIREMENTS, SITE CONDITIONS, OR JOB REQUIREMENTS.

1.0 INTRODUCTION

For remedial investigations, primary consideration must be given to obtaining samples that are representative of existing conditions and valid for chemical analysis. SOP-1, "Drilling Methods," contains specific procedures regarding drilling and sampling. Trenching and test pitting procedures are described in SOP-8. Frequently, materials recovered during these activities are stockpiled and sampled while waiting to be processed. Stockpiles often contain complex mixtures of solids and semisolids. Correct and representative sampling of stockpiled materials requires thorough characterization of the stockpile and its profile.

This Standard Operating Procedure (SOP) is intended to provide guidance for developing a sampling plan of stockpiles, aid in site evaluation, selection of soil sampling methods, and selection of sampling equipment. Sample types, samplers, and sampling methods are discussed. It is not intended to provide an all-inclusive discussion of soil sampling methods. A sampling plan is dependent upon a variety of factors including project objectives, physical properties of the stockpile (homogeneity, volume (size and shape), hazards (chemical or physical), access, stability etc. In addition, the history of the stockpile (i.e., the why, when, and how it was generated), requirements of regulatory agencies, limits and bias of the sampling plan, methods, and/or equipment will influence a sampling plan. This guideline focuses on methods and equipment that are readily available and typically applied. It does not address safety concerns associated with stockpile sampling. Health and safety issues are addressed in a separate, site or project specific health and safety plan.

2.0 STOCKPILE CHARACTERIZATION

Thorough characterization of a stockpile aids in the design of an efficient sampling plan. Stockpile characterization may include a review of the stockpile's history, physical properties, requirements of regulatory agencies, and project objectives. No sample is unbiased, but with careful planning, sample bias is reduced and precision increased.

2.1 Stockpile History

The history is the why, when, and how of the material stockpiled. In some cases, the stockpile history may not be known. Generally, however, the stockpiles referred to in this SOP are generated through active/current remedial investigations. When evaluating the stockpile history, the processes that created the stockpile (i.e., trenching, drilling, excavations, etc.), needs to be taken into consideration. The creation process affects the distribution of constituents and

physical properties (homogeneity). Management of the stockpile, especially an "active" stockpile where current or recent activities may change the characteristics, also needs to be considered. Regulatory agencies typically establish how the waste materials should be regulated and managed (e.g., regulated and managed as hazardous waste). Considerations taken by the regulatory agencies (Nevada Division of Environmental Protection [NDEP]) generally will factor in the determination of stockpile sampling, characterization and management. Finally, and perhaps most importantly, consideration needs to be taken regarding the future of the stockpile (e.g., will it be disposed of, and if so, how and where).

2.2 Physical Properties of the Stockpile

This includes the types of constituents that may be present, the volume of materials (size and shape of the stockpiled material), heterogeneity of the stockpiled materials, stability of the stockpiled materials and other properties of the stockpiled materials that will influence sample collection.

2.3 Waste Properties

Waste properties are the chemical constituents (e.g., volatile and/or semivolatile organic compounds, heavy and/or regulated metals), distribution variability within the stockpiled materials, and special analysis associated with site specific chemicals of concern that must be evaluated when determining a sampling plan.

2.4 Problems

Precision, accuracy and sample bias are statistical concepts that will be briefly defined but not discussed in detail. However they need to be taken into consideration when developing a sampling plan and sampling a stockpile. There are texts available that provide detailed information about statistical issues with regard to soil sampling (Barth *et al.*, 1989; Bauer, 1971).

Although it will not be discussed in detail in this SOP, precision is a measure of the reproducibility of measurements of a particular soil condition or constituent (USEPA, 1992). *Preparation of Soil Sampling Protocols: Sampling Techniques and Strategies* (USEPA, 1992) provides a detailed definition and description of precision regarding soil samples provides an in depth discussion regarding precision, bias and their effects on accuracy.

Accuracy is the correctness of the measurement; however, it is an unknown (USEPA, 1992). *Preparation of Soil Sampling Protocols: Sampling Techniques and Strategies* (USEPA, 1992) provides an in depth discussion regarding precision and bias and their effects on accuracy.

An unbiased sample is unattainable unless the entire stockpile is sampled for analysis. Sampling bias may occur due to a variety of factors including, but not limited to, the following:

- Sampling equipment and method choice (inadequate stockpile representation)
- The physical characteristics of the stockpile (stratification, layering, or multi-phase occurrences)
- The sample collection does not allow thorough representation of the stockpiled materials (limited access).

3.0 SAMPLING PLAN

After a complete evaluation of site specific factors, a sampling strategy or plan should be developed. This should include the location and frequency of samples, type of sample to be collected, any special or site-specific sampling equipment, and sample containment and analysis.

Sample location(s) and frequency are based upon the characterization of the stockpiled materials, project objectives, and requirements of regulatory agencies. There is no “template” or “boiler plate” method for determining the location and frequency of the samples. Sample location and frequency are generally site-specific and directed by the project objectives.

Samples are generally collected from the face (surface) and from within the stockpiled materials to ensure adequate representation of the stockpile. Sample location(s) may be determined by the following methods:

- Directed sampling (based on the judgement of the investigator)
- Simple random sampling (generally across the surface of a largely heterogeneous stockpile)
- Stratified random sampling (useful when distinct layers have been identified within the stockpile)
- Systematic grid sampling (sampling at fixed intervals—useful where the distribution of physical properties are fairly heterogeneous)
- Systematic sampling over time (useful in land farming where breakdown of constituent properties are viewed over time)

- Alternative methods such as soil gas verification

The number of samples collected is determined through a variety of factors including, but not limited to, project objectives, stockpile characterization/materials, necessary degree of sample confidence, access to sampling points, and project budget.

3.1 Sampling Methods

Based on the desired analytical objectives of the sampling, analytical considerations, and available resources (for sampling and analysis), the following two types of sample methodologies are used in stockpile evaluation:

- Grab Sampling—the most common type. A sample is taken from a particular location. Useful in determining discrete variability when multiple are samples collected.

- Composite sampling—a number of individual samples are individually collected and combined into a single sample for subsequent analysis. Used where average or normalized concentration estimates of waste stream constituents are desired.

There are four basic types of samples collected in site investigation work: bulk samples, representative samples, "undisturbed" samples, and composite samples. They are described as follows:

- Bulk samples are generally a shovelful or trowelful of material taken from the stockpiled materials. There is usually significant uncertainty regarding the distribution of the constituents and physical properties represented. This type of sampling is rarely used and is the least accurate of the four basic sample types.

- Representative samples are collected with a drive or push tube. They do not represent undisturbed conditions but do represent all the constituents that exist at a certain interval.

- "Undisturbed" samples are high-quality samples collected under strictly controlled conditions to minimize the structural disturbance of the sample. Undisturbed samples should be collected when all the presampling relationships need to be preserved. Every effort is made to avoid altering the sample during the sampling process. Undisturbed samples are generally required for geotechnical work and are rarely necessary to assess environmental quality.

- Composite samples are a blend or mix of sample material, usually combined from two or more stratigraphic intervals mixed in such a way as to represent the total borehole. Homogenized samples are samples that are composited over a discreet interval. For example, if a sample represented the 10- to 11.5-foot interval, the material from that interval would be mechanically blended before being put into the appropriate sample container. Volatile organic compound samples are never composited or homogenized.

Additional documents referencing alternative sample types and methodologies are listed in Section 5.0 of this SOP.

4.0 SAMPLING EQUIPMENT

Stockpiles often contain complex mixtures of solids and semisolids and may range from a few bucketsful or less, to areas covering several acres (large excavations). No single type of sampler or sampling method can provide adequate representation of the stockpiled materials. Selection of the type of equipment used will be based on the following:

- Trying to limit the possibility of cross contamination
- Assuring comparability
- Obtaining adequate sample volume
- Ease of use
- Limiting the degree of hazard during sample collection
- Limiting the cost of sample collection.

Small stockpiles may be adequately sampled with a hand auger, trowel, or shovel, while larger stockpiles may require drill rigs to obtain representative samples. A more detailed description of each type of equipment is presented in Chapter 9 of USEPA SW-846 and Table 2 in the American Society for Testing and Materials (ASTM) Standard Guide for Sampling Waste Piles (D-6009). Typical sampling devices include, but are not limited to, the following:

- Scoops, trowels, and shovels—useful for surface and shallow applications (generally, <1 foot deep); does not collect undisturbed samples
- Hand augers—has subsurface applications; does not collect undisturbed samples
- Split-barrel push coring device—applicable to subsurface sample collection to about a 3 foot deep; limited by sample moisture content and particle size
- Drill rigs/heavy excavation equipment—useful when sampling from within stockpiled materials

5.0 FURTHER READING/DOCUMENTATION

Although not referenced in this SOP, the following list of ASTM standards and articles has been provided to assist the reader in locating additional documentation regarding specific sampling methods and equipment:

- D 1452—Practice for Soil Investigations and Sampling by Auger Borings
- D 1586—Test Method for Penetration Test and Spilt Barrel Sampling of Soils
- D 4547—Practice for sampling Waste and Soils for Volatile Organics
- D 4687—Guide for General Planning of Waste Sampling

Additional documentation regarding stockpile sampling and soil sampling may be attained at these websites: www.astm.org, and www.epa.gov .

6.0 REFERENCES

American Society for Testing and Materials (ASTM). 2001. Standard Guide for Sampling Waste Piles D 6009 – 96 (Reapproved 2001)

Barth et al. 1989. Soil Sampling Quality Assurance User's Guide.

Bauer. 1971. A Statistical Manual for Chemists.

U.S. Environmental Protection Agency. 1992. Preparation of Soil Sampling Protocols: Sampling Techniques and Strategies, EPA/600/R-92/128, Chapter 3, page 3-1. July

BASIC REMEDIATION COMPANY
STANDARD OPERATING PROCEDURES
BMI COMMON AREAS
CLARK COUNTY, NEVADA

SOP-28

HYDROPUNCH

STANDARD OPERATING PROCEDURES

SOP-28
HYDROPUNCH

TABLE OF CONTENTS

Section **Page**

1.0 INTRODUCTION 1

2.0 DEFINITIONS 1

3.0 RESPONSIBILITIES 2

4.0 HYDROPUNCH OPERATION 2
- 4.1 Basic Operation of HydroPunch Samplers 2
- 4.2 Installation of the HydroPunch Sampler 3
- 4.3 Sample Collection 3
- 4.4 Borehole Abandonment 4

DISCLAIMER

THE FOLLOWING STANDARD OPERATING PROCEDURE PROVIDES GENERAL GUIDANCE FOR BRC CONTRACTORS FOR TECHNICAL ISSUES ADDRESSED DURING ENVIRONMENTAL SITE INVESTIGATION AND REMEDIATION ACTIVITIES. IT IS NOTED, HOWEVER, THAT EACH SITE IS UNIQUE AND THESE GUIDELINES ARE NOT A SUBSTITUTE FOR COMMON SENSE AND GOOD MANAGEMENT PRACTICES BASED ON PROFESSIONAL TRAINING AND EXPERIENCE. IN ADDITION, INDIVIDUAL CONTRACT TERMS MAY AFFECT THE IMPLEMENTATION OF THIS STANDARD OPERATING PROCEDURE. BRC CONTRACTORS RESERVE THE UNRESTRICTED RIGHT TO CHANGE, MODIFY OR NOT APPLY THESE GUIDELINES IN THEIR SOLE, COMPLETE, AND UNRESTRICTED DISCRETION TO MEET CERTAIN CIRCUMSTANCES, CONTRACTUAL REQUIREMENTS, SITE CONDITIONS, OR JOB REQUIREMENTS.

1.0 INTRODUCTION

This Standard Operating Procedure (SOP) provides an overview of the methods and procedures to collect groundwater samples using a HydroPunch™ sampler. HydroPunch™ is a patented method for collecting groundwater samples at precise depths from water-bearing zones in unconsolidated soils without the drilling, installation, and development of monitoring wells. HydroPunch™ sampling also can be used to collect samples of non-aqueous phase liquids (NAPL). The HydroPunch™ sampler is hammered or hydraulically advanced through the subsurface to the desired water-bearing zone from which the sample is to be collected. The groundwater or NAPL sample is allowed to enter the sampler and the sample is retrieved. The installation and sampling procedures are discussed in Section 4.0 of this SOP.

Two types of HydroPunch™ samplers can be used. The HydroPunch I™ sampler is removed intact from the subsurface to retrieve the sample. HydroPunch II™ allows an unlimited sample volume to be collected using a bailer; however, an expendable drive point must be left in the ground. Because the HydroPunch II™ can collect an unlimited sample volume, it is considered the preferable sampling method. In the event that regulations do not permit sampling equipment to be abandoned in the subsurface, the HydroPunch I™ should be considered.

2.0 DEFINITIONS

Bailer	A cylindrical tool designed to remove solid or liquid material from a well or borehole. A valve at the bottom of the bailer retains the material. The three types of bailers include the flat-valve, the dart-valve, and the sand pump with rod plunger.
Blow Count	The cumulative number of impacts of a 140-pound hammer dropped from a height of 30 inches applied to a sample spoon that is being driven into subsurface soil or rock. Blow counts are typically tallied for intervals of six inches.
Borehole	The hole created by drilling or pushing an object through the subsurface.
Cone Penetrometer	An instrument that identifies underground conditions by measuring the differences in the resistance and other physical parameters of the strata. The cone penetrometer consists of a conical point attached to a drive rod of smaller diameter which is advanced by a drill rig.
Drive Point	The conical tip of the HydroPunch™ sampler that penetrates the subsurface as the sampler is advanced.

Non-Aqueous Phase Liquid	Petroleum liquid that is immiscible with water and floats atop the water column.
Tremie Pipe	A device, usually a small diameter pipe, that carries materials (e.g., grout, sand, and bentonite) to the bottom of the borehole. Tremie Pipes allow pressure grouting from the bottom up without introduction of appreciable air pockets.

3.0 RESPONSIBILITIES

The **Project Manager** or Task Leader (a qualified Nevada Certified Environmental Manager [C.E.M.]) selects the site-specific HydroPunch™ installation, sampling, and analysis program, with input from the site hydrogeologist and field team leader, and maintains close supervision of activities and progress of work.

The **Site Hydrogeologist** (a qualified Nevada C.E.M.) selects site-specific installation options, such as sampling depth, and assists in the preparation of technical provisions for drilling.

The **Field Team Leader** (a qualified Nevada C.E.M.) implements the HydroPunch™ installation and sampling program.

Drilling Rig Geologist: Supervises and/or performs HydroPunch™ point installation and sampling.

4.0 HYDROPUNCH OPERATION

This section describes the basic operation, installation and sample collection of HydroPunch™ samplers, and borehole abandonment. The HydroPunch™ sampler is not intended to be used to assess the depth and extent of permeable zones; some knowledge of the site lithologies from previous soil sampling is necessary prior to HydroPunch™ sampling.

4.1 Basic Operation of HydroPunch Samplers

The HydroPunch II™ sampler consists of a cylindrical, stainless steel sample body with a length of five feet and a diameter of two inches. A disposable, cylindrical filter screen, inlet valve, and expendable conical drive point are fitted within the sample body so that these internal parts can telescope from the sample body. The screen and internal parts are sealed from the exterior by an O-ring seal at the base of the drive point when the HydroPunch™ is in the closed position. The sampler is driven to the desired sampling depth in the water-bearing zone. The body of the

sampler is pulled back approximately four feet. When the sample body is retracted, the drive point and attached screen remain at the original depth and are exposed to the formation, allowing the water to pass through the exposed screen and enter the sampler body. The screen, consisting of either stainless steel or polyethylene, filters soil particles from the sample. A bailer can be lowered from the surface into the sampler body to collect the groundwater sample. The HydroPunch I™ is slightly longer and narrower than the HydroPunch II™. For HydroPunch I™, the sampler is retracted 18 inches to expose the inlet screen. When the sample chamber has been filled, the entire sampling unit is removed from the subsurface. The groundwater sample is held in the sample body by two Teflon check valve in the sample body.

4.2 Installation of the HydroPunch Sampler

Prior to installation, the internal and external parts of the HydroPunch™ are to be decontaminated in accordance with SOP-31.

The HydroPunch™ sampler can be installed using either a cone penetrometer testing (CPT) rig or a conventional drill rig. Using a CPT rig, the HydroPunch™ sampler is attached to the CPT push rods and driven from the surface to depth using the rig's hydraulic ram. CPT procedures are presented in SOP-11. Using a drill rig, the HydroPunch™ sampler can be attached to standard soil sampling drill rods and either driven to depth using a standard 140-pound hammer or hydraulically driven through the bottom of a borehole drilled into the water bearing zone. As a general rule, without damaging the sampler, the HydroPunch™ sampler can be driven into formations using the hammer method if blow counts do not exceed 30 per 6 inches. The HydroPunch™ should be driven at least five feet below the top of the water bearing zone to allow sufficient pressure to fill the sample chamber, which is higher than the intake screen. Care should be taken to not retract the sample body prior to reaching the desired sampling depth. When the desired depth is reached, the HydroPunch™ is retracted either 18 inches (HydroPunch I™) or four feet (HydroPunch II™) (as described in Section 4.1) to expose the inlet screen to the water-bearing zone.

4.3 Sample Collection

With the HydroPunch II™, a groundwater sample can be retrieved from the sample body in site using a 1-inch outside diameter (O.D.) sample bailer. The sample bailer is to be decontaminated prior to use in accordance with SOP-31. The sample volume that may be collected using HydroPunch II™ is theoretically unlimited, but practical experience indicates that the intake screen will tend to silt up over time and the diminishing productivity of the HydroPunch II™

point sometimes precludes collection of large sample volumes. NAPL sampling may be conducted with HydroPunch II™ by the sample method described above using the hydrocarbon bailer supplied by the HydroPunch™ vendor. The hydrocarbon bailer permits sampling of the NAPL layer with minimal disturbance and mixing, and allows for a more accurate estimation of NAPL layer thickness. With the HydroPunch I™, the groundwater sample is collected by removing the entire sampler from the subsurface. The sample is retained in the sample chamber by two check valves. Upon retrieval, the upper check valve is replaced with a Teflon stop cock valve. The sampler is turned upside down, the stop cock is opened, and the sample is decanted into the sample container. The HydroPunch I™ sampler will yield 500 milliliters (ml) of sample volume.

4.4 Borehole Abandonment

Following sample collection and removal of the HydroPunch™ from the subsurface, the borehole should be backfilled to the surface in accordance with local regulations, which generally require grouting the entire length of the borehole to the surface. For HydroPunch™ points advanced from the ground surface, the small diameter of the borehole will likely require using a tremie pipe during backfilling to prevent bridging of the backfill material.

BASIC REMEDIATION COMPANY
STANDARD OPERATING PROCEDURES
BMI COMMON AREAS
CLARK COUNTY, NEVADA

SOP-29

DRUM SAMPLING

STANDARD OPERATING PROCEDURES

SOP-29
DRUM SAMPLING

TABLE OF CONTENTS

Section **Page**

1.0 INTRODUCTION 1

2.0 BACKGROUND REVIEW 2
- 2.1 Data Review 3
- 2.2 Explosive Product Review 3

3.0 SITE INSPECTION 3

4.0 CONTAINER SELECTION CONSIDERATIONS 5

5.0 CONTAINER HANDLING AND STAGING 7

6.0 REMOTE OPENING 8

7.0 PROBLEM CONTAINERS 10
- 7.1 Leaking or Deteriorated Drums 11
- 7.2 Bulging Drums 11
- 7.3 Drums Containing Explosive or Shock Sensitive Waste 11
- 7.4 Drums Containing Radioactive Waste 12
- 7.5 Packaged laboratory Wastes (Lab Packs) 12
- 7.6 Air Reactive Wastes 13
- 7.7 Gas Cylinders 13

8.0 CONTAINER SAMPLING 13
- 8.1 Sampling Procedures 13
- 8.2 Sample Preservation and packaging Procedures for Drummed Waste Samples 15
- 8.3 Resealing and Siting Containers 15
- 8.4 Investigation Derived Waste (IDW) 16

9.0 REFERENCES 16

DISCLAIMER

THE FOLLOWING STANDARD OPERATING PROCEDURE PROVIDES GENERAL GUIDANCE FOR BRC CONTRACTORS FOR TECHNICAL ISSUES ADDRESSED DURING ENVIRONMENTAL SITE INVESTIGATION AND REMEDIATION ACTIVITIES. IT IS NOTED, HOWEVER, THAT EACH SITE IS UNIQUE AND THESE GUIDELINES ARE NOT A SUBSTITUTE FOR COMMON SENSE AND GOOD MANAGEMENT PRACTICES BASED ON PROFESSIONAL TRAINING AND EXPERIENCE. IN ADDITION, INDIVIDUAL CONTRACT TERMS MAY AFFECT THE IMPLEMENTATION OF THIS STANDARD OPERATING PROCEDURE. BRC CONTRACTORS RESERVE THE UNRESTRICTED RIGHT TO CHANGE, MODIFY OR NOT APPLY THESE GUIDELINES IN THEIR SOLE, COMPLETE, AND UNRESTRICTED DISCRETION TO MEET CERTAIN CIRCUMSTANCES, CONTRACTUAL REQUIREMENTS, SITE CONDITIONS, OR JOB REQUIREMENTS.

1.0 INTRODUCTION

This Standard Operating Procedure (SOP) is applicable to opening and sampling closed containers or drums (120 gallons or less) on uncontrolled hazardous substances sites. Bulk tanks such as railroad tank cars, large aboveground and underground tanks (with a capacity of more than 120 gallons), and tank trailers are not considered here. SOP-35 describes the procedures for waste sampling in general and SOP-36 describes the procedures for sampling tanks.

Safety requirements shall be followed as stated in the site-specific safety plan. Personnel involved in handling drum samples, or for training requirements, shall include, but not be limited to, the following:

- Occupational Safety & Health Administration (OSHA) Hazardous Waste Operations and Emergency Response training (40-hour basic plus annual 8-hour refreshers), 29 Code of Federal Regulations (CFR) 1910.120.
- U.S. Department of Transportation (DOT), 49 CFR 172.700
- U.S. Environmental Protection Agency (EPA) 40 CFR 262
- Current respirators fit test
- First Aid/CPR
- Equipment manufacturers requirements
- Any applicable state requirements
- Any site-specific requirements

In general, drum opening and sampling will have one of the following objectives:

- Determining the presence of hazardous materials on the site. Such a program involves a very limited number of containers, perhaps as few as one.
- Characterizing the range of materials present at a site. Containers would be chosen for sampling by means of systematic selection criteria.
- Characterizing container contents for such purposes as recycling and classification purposes, bulking, and segregation for disposal. This program may involve opening and sampling every container on a site in support of a remedial action program, and performing on-site compatibility testing.

The guidance presented is based on field experience in working with containers on uncontrolled hazardous substance sites. In most cases, hard-and-fast rules cannot be given and professional judgment is required because uncontrolled variables are involved. For example, no one can be absolutely certain of any assessment of the potential contents of a container. Labels cannot be absolutely trusted; only educated guesses can be made by a thorough review of all available background data, such as potential sources of the wastes, dependent on-site conditions, and equipment limitations.

Three basic chemical risks are involved in moving and opening closed containers: exposure of personnel to toxic or radioactive material, fire, and explosion. The first risk can be reasonably eliminated through the use of proper skin and respiratory protection equipment. The use of level A protection acceptably reduces the risk of a worker being injured by toxic vapors, mists, or splashes. Level A protection is to be used only by trained and qualified individuals.

In the same way, standard fire prevention procedures can be used to reduce the fire hazard through the use of flammable gas detectors and fire suppression equipment. These procedures include using non-sparking tools and intrinsically safe radios, pumps, and other equipment, as well as staging firefighting equipment and eliminating any other possible ignition sources.

The explosive risk, however, is not as easily handled, and thus is the primary consideration in any container-opening operation. Even if no solid evidence of the presence of explosives is found during the preliminary data collection, one can never be certain that explosives have not been disposed of at the site, or that the conditions in the drum may result in explosion upon exposure to air, or release of pressure upon being opened. To provide the same reasonable level of protection against this risk as against toxic exposure and fire, a very cautious approach, such as the one recommended in this guideline, should be used. This includes limiting the number of people in the work zone, using blast shields to protect people, remote opening devices and limiting movement of drums to the minimum necessary to achieve the site objectives.

2.0 BACKGROUND REVIEW

This section details the elements of a site background review necessary to prepare a Site Operations Plan for drum opening. The decision to conduct the operation depends on the assessment of the site history. Therefore, it is important that the following tasks are completed thoroughly.

2.1 Data Review

Previous and existing information on the nature of drum contents should be reviewed in planning for a container-opening operation. Of special importance are items that can be used to characterize the types of hazardous materials present at the site (such as generator records, manifests, inventories, personal interviews, and any previous monitoring data or ambient monitoring above the drum/container). The review of all such data should search for the possible presence of shock-sensitive explosives and/or reactive chemicals. The absence of waste inventory information could mean that drum opening would have to be done under the most restrictive and health protective means (Level A, remotely operated equipment, blast shield).

2.2 Explosive Product Review

If the site is a waste disposal or storage operation, a survey of commercial producers or users of explosives within the area served by the facility must be conducted. The determination of the area covered in this survey is a judgment that should be based on locations of known waste generators that used the facility and geographic location of the site. Agencies that could assist in identifying explosive producers or users are local and state police units, state transportation departments, the DOT, and USEPA state hazardous waste permit offices. Standard Industrial Classification codes can be used to locate producers of explosives from lists of manufacturers available from state commerce agencies, local chambers of commerce, planning agencies, etc. This section does not address the more realistic possibility of two incompatible chemicals that may have been mixed in the drum and could explode upon being moved, or exposed to the air.

3.0 SITE INSPECTION

A site visit is required prior to planning a drum opening operation. Information gathered during the inspection should include the following:

- Site boundaries such as fences, roads, and natural boundaries.
- Access points and travel routes on the site.
- Topographic features such as surface water, drainage, gullies, water table.
- Adjacent land uses such as residential, agricultural, public use areas, commercial establishments, schools, and natural areas.
- Utility lines (buried and aboveground), railroads, and public roads close to the site.

- Container storage areas: provide observational details; describe if drums are jumbled, stacked, piled, arranged in rows, etc. The general condition of drums indicates if containers can be grouped according to visual features, contents, or any other classification method.
- Will drums need to be excavated?
- Will contents need to be removed prior to drum removal?
- Buildings and other site structures, as well as any other disposal areas such as lagoons, landfills, and surface piles.
- Location of potable water sources.
- Will overpacking be necessary?
- Any evidence of spills or leaking drums?
- Location of potential staging areas.
- Prevailing wind direction.
- Evacuation route.
- Available spill or medical team response.
- Location of nearest emergency room, including hospital location maps and associated emergency phone numbers. (Note: this information is provided in the project Health and Safety Plan [BRC and MWH, 2005]).

During the site inspection phase, local officials should be contacted to arrange for fire protection, spill response, and police support during the operation. Interviews with site workers, local officials, and any medical and other people familiar with the site's history should also be conducted.

The central purpose of the background review is to evaluate the risk presented to personnel engaged in drum-opening operations. An assessment of drum contents is most important because it identifies specific risks. However, other site features also affect the hazard potential. Leaking and corroded drums, bulging drums, crowded and poorly organized conditions, and drums of unknown and apparently diverse origins are conditions that require careful planning.

Accurate quantitative methods are not available to evaluate the total danger. Assessment of the danger is subjective and should be done by personnel experienced in field operations at hazardous sites. Good professional judgment is required, and project management must feel that adequate information is available to support a decision to conduct the drum-opening operations.

Any positive indication of shock-sensitive or radioactive materials that might react or explode requires special consideration. Sites that are suspected or known to contain such materials are to be inspected for planning for drum opening. In addition, sites that are judged to be unduly hazardous for any other reason should be inspected.

4.0 CONTAINER SELECTION CONSIDERATIONS

The containers selected for opening and sampling will depend on the purpose of the operation and on considerations of safety; that is, a container that may detonate is to be avoided. Although drums with unknown contents are found at uncontrolled disposal sites, it is worthwhile to consider drum markings and types, as well as drum groupings.

The field team should mark all drums with a unique identifying control number and record it in a field log for future reference. Photos of the marked drums can be a valuable tool for drum control.

When considering sampling for enforcement, the first choice of drums would be those marked with known hazardous materials (trade name, chemical name, empirical formula) or hazardous labeling. Next would be those isolated by themselves or material contained in an exotic metal container (aluminum, nickel, stainless steel). Then consideration should be given to the unmarked drum piles or stacks. These should be sampled randomly among the various distinguishable drum lots. It should be noted that in many cases a ring-top drum is used for solid materials and bung-top drums are used for liquids, although there are exceptions.

When sampling for site characterization purposes, a concerted effort should be made to distinguish drum lots and to get an accurate drum count among the lots. A drum that appears to be characteristic and in the center of all the major drum lots should be sampled first, followed by drums in as many of the smaller lots as practical. Also, if practical, duplicate samples should be taken on major drum lots at either end of a lot to see if the wastes appear to be characteristic all the way through.

On most abandoned waste sites, there is some organization or pattern to the way the material was placed on the site. The pattern is occasionally as detailed as finding the flammable solvents in one area, acids in another, cyanide in another, recoverable metals in a fourth, and so on. Some disposal facilities stencil control numbers on drums to indicate specific lots. Often, if the site was poorly run, the only indication that a group of drums is related will be their color, size, or type.

Typically, waste is shipped to sites in 55-gallon drums on trucks. Sixty to 80 drums are delivered from a given load, depending on the weight of the load. During the initial site inspection, one should look for distinguishing features in an attempt to define the different lots of drums on the site. Often the trade name, chemical name, or empirical formula will be written on the drum. Another distinguishing feature would be drums of exotic metal such as aluminum, nickel, or stainless steel. A manufacturing facility will use a specified DOT-coded drum, a strange drum size, or a drum with an unusual configuration or adaptation for a particular process line.

Almost every site that has been receiving waste has an isolated group of containers. Approach these with care but do try to determine why they were segregated. Occasionally a group of drums is found marked "DFW" (roughly translates as "Don't Fool With") because of their extreme hazard or because the people handling them have had an accident or other unusual experience with them.

In any lot of drums there is sometimes encountered an unusual or out-of-place container. This oddball container will not fit the pattern, color, or size of those around it (it may be the only distended drum among undistended drums or a lined drum among unlined drums).

Drums that are structurally damaged, or if their movement or sampling would endanger personnel or the environment, should be avoided. Samples of drums in stacks or piles should not be taken if at all possible. No one should stand on any drum.

Before sampling any drums, an external radioactivity scan must be conducted and the results recorded in the field notebook. If different types of containers are present, they should be sampled in the following order, based on what they can be expected to contain and in increasing order of hazard:

- Paper, plastic, cloth, and burlap bags
- Glass carboys and jugs (except chemical reagent or laboratory-packed bottles)
- Fiberboard drums
- Plastic and polyethylene carboys and containers
- Plastic-lined steel drums
- Steel drums
- Exotic metal drums

- Odd containers (distended, isolated, marked "DFW", etc.)

5.0 CONTAINER HANDLING AND STAGING

Personnel involved in handling and transporting containerized waste work in teams of no fewer than two people. Visual contact must be maintained between members of the working team at all times. All team members must be able to communicate among themselves and with the Site Health and Safety Officer (HSO) by two-way radio at all times.

Prior to physically handling a drum or other container, the following preliminary classifications checklist must be reviewed and each response noted in a field notebook:

- Is the drum radioactive?
- Does the drum exhibit leakage or deterioration (is it unsound)?
- Does the drum exhibit apparent internal pressure? Is the drum empty or bulging?
- Does the drum contain markings, which would indicate that the contents are potentially explosive?

The results of the preliminary classification checklist dictate which specific procedures will be followed in handling, opening, and sampling the drum.

The handling, movement, and transport of drums and other containers is done by mechanical equipment only; no drums are handled manually. Remote drum handling equipment may consist of a grappler-equipped backhoe or front-end loader with a drum sling or platform. Drums should be transported by front-end loaders or forklifts equipped with modified carrying platforms. The backhoe or loader can also be equipped with a blast shield. Portions of equipment that contact drums or canisters should be constructed of non-ferrous metals or contact portions should be coated or lined to preclude spark generation. Handling and transport equipment must be equipped with full frontal, side splash, and explosion shields. Class ABC fire extinguishers shall be fitted to the body of each piece of equipment.

When possible, drums or other containers to be sampled should be opened and sampled in place to minimize handling. However, when drums are stacked or are close together, they may have to be moved to prevent sympathetic detonation of, or chemical reaction with, other drums around the one being opened. The main criterion is distance to other drums; a reasonable distance should be maintained to segregate the drum to be opened from others.

Drums or containers exhibiting the following characteristics require special treatment in handling and sampling: leaking or deteriorated drums bulging drums, drums containing explosive or shock-sensitive waste, drums containing radioactive waste, lab packs, and gas cylinders.

When drums are moved, they are taken to a staging and sampling area that is lined and diked or bermed to control any major spillage. This area must be far enough away from other drums on the site to prevent a chain reaction. Only one container at a time is placed in the staging area and opened. One crew can be moving and setting up the remote-opening equipment on the next container while another crew is sampling, labeling, and resealing the first container.

Containers that are inside warehouses, basements, or other buildings should be moved outside before they can be opened. However, if this is not possible, the facility manager should be contacted for special assistance in developing the opening plan. Adequate ventilation is critical for container-opening operations.

Empty drums containing less than l inch of solid residual waste and those resulting from on-site bulking and repack operations shall be loaded by grappler into transport equipment and placed within the empty drum staging area. Residuals, where possible, shall be transferred to repack containers prior to movement.

6.0 REMOTE OPENING

Because of the possibility of encountering a drum containing a shock-sensitive material, any drum to be moved and/or sampled should be remotely shaken. One way of doing this is to carefully tie a rope around the drum and shake it from behind a barrier at a safe distance.

The required method of opening drums is by remote means. Four types of remote-opening equipment are available: the bung spinner, the remote-controlled drill, the drum deheader, and the drum piercer.

The bung spinner consists of the following:

- Air impact wrench with non-sparking adapter
- Drum-mounting bracket
- Two-stage regulator
- Compressed-air cylinder with 100 feet of air hose and control valve

The impact wrench is mounted over the bung on top of the drum by means of the steel-mounting bracket. The air tank, regulator, and control valve can be placed up to 100 feet away from the drum in a well-protected location.

A remote-controlled, air-operated, self-feeding, and self-retracting drill can also be used. This tool consists of the following:

- Self-feeding and self-retracting drill
- Drum-mounting bracket
- 100 feet of air and control hoses
- Two-stage high-pressure regulator
- Compressed air cylinder
- Filter/regulator/lubricator unit

The air tank, regulator, and control valves can be placed up to 100 feet away from the drum in a well-protected location. There are two controls on this piece of equipment: a start valve and an emergency retract valve.

The drum piercer consists of the following:

- Hydraulic ram with hand pump
- 100 feet of hydraulic hose
- Drum mounting bracket (top or side)
- Piercing nail

This unit uses the same bracket as the drum drill. The hydraulic ram slowly forces the steel piercer through the drum surface as the hand pump is operated. When the small-diameter hole is complete, opening a relief valve on the pump allows the spring to retract the piercer from the hole.

The drum deheader consists of the following:

- Cutting edge with handle
- Motor

- 100 feet of hydraulic hose or electrically source

Position the cutting edge just inside the top chime and then tighten the adjustment screw so that the cutting edge is against of the side of the drum. The self-propelled motor will start the cut continuing until the entire top is cut off.

When any of these pieces of equipment is used, the control lines are to be extended to their maximum, and drum-opening personnel are to operate the controls from behind sandbags, a concrete or brick structure, blast shield, or other solid barrier.

The opening surfaces of the drill, bung spinner, or deheader should be decontaminated after each use.

The following guidelines are offered for other types of containers:

- Ring-closed, open-top drums: Loosen the ring and then remove it remotely by means of a rope. If it is necessary to cut the ring, do so near the bolt or clamp/lever so that there will be a place to attach the rope.

- Glass carboys or jugs with lapped/ground-glass stopper or plastic cap: Slowly release any retaining wire and vent any pressure. Remove the stopper or cap by hand only. Caution – ethyl ether is commonly stored in glass jugs and if not fully clean when the cap was put on, can form crystals that are shock sensitive – the twisting action can set it off.

- Fiberpacks or corrugated cardboard containers: Release the locking ring and remove the ring and lid by hand.

- Plastic or polyethylene carboys and plastic-lined drums (when necessary): Use a non-sparking aluminum, brass, or beryllium bung wrench of the proper size. Do not use a bung wrench on any distended drums of this type; remote methods will be applied.

- Plastic Kraft paper, burlap, or cloth bags: Use a trowel or sampling trier. The bags should be resealed or placed in an overpack.

7.0 PROBLEM CONTAINERS

Special handling techniques are required for containers that may expose personnel to particularly hazardous conditions. These techniques are described in general below; site-specific conditions may require the development of specialized methods.

7.1 Leaking or Deteriorated Drums

If a drum exhibits leakage or apparent deterioration that may lead to rupturing (as determined by the On-Site HSO), the contents must immediately be transferred to a repack drum. Equipment, including transfer pumps used in the repack operation, must be of explosion-proof construction.

Leaking drums containing sludges or semi-solids, drums that are structurally sound but that are open and contain liquid or solid waste, and drums that are deteriorated but can be moved without rupture must be immediately placed in overpack containers.

7.2 Bulging Drums

Drums that may be under internal pressure, as evidenced by bulging, must be sampled in place. Extreme care must be exercised when working with and adjacent to potentially pressurized drums.

If movement of a pressurized drum is unavoidable, the drum is handled only by a grappler unit constructed for explosive containment. The bulging drum should be moved only as far as necessary to allow seating on firm ground, or it should be carefully overpacked.

Openings into pressurized drums shall be plugged and the bung holes fitted with pressure venting caps set at 5 pounds per square inch release.

7.3 Drums Containing Explosive or Shock Sensitive Waste

The Project Manager and HSO must be notified immediately of any drums that contain wastes identified by sampling, or are suspected by visual examination to be explosive in nature, before the drums are handled in any way.

If the Project Manager and HSO approve handling of these drums, they shall be handled with extreme caution. Initial handling shall be by a grappler unit constructed for explosive containment. Drums shall be palletized prior to transport to a high hazard interim storage and disposal area.

If at any time during remedial activities, an explosive, pursuant to provisions of Title 18, U.S. Code, Chapter 40 (Importation, Manufacture, Distribution, and Storage of Explosive Materials, 1975 Explosives List) is identified, it should be secured and the appropriate state and federal agencies notified.

Identification of an explosive substance during the course of a remedial action is usually based on the experience of on-site personnel. Potentially explosive materials usually may be identified by their physical characteristics (texture, color, density, etc.) as well as the way they are packaged or labeled. Most explosives are solids. In some cases they are packaged in water-tight containers to exclude water, while in other cases they are packaged wet to preclude explosion.

Prior to handling or transporting drums containing explosive wastes, personnel working in the area shall be removed to a safe distance (as determined by the HSO). Continuous contact with the communication base shall be maintained until handling or transporting operations are complete. An audible siren signal system, similar to that employed in conventional blasting operations, shall be used to signify the commencement and completion of explosive waste handling or transporting activities.

7.4 Drums Containing Radioactive Waste

Drums containing radioactive wastes shall not be handled until radiation levels have been determined by an initial field survey and recorded in a field notebook. The survey shall include background levels, direct gamma readings, and laboratory analysis of drum surface wipe samples.

Depending on the level of radiation encountered, handling and transport may require special shielding devices to protect personnel. Following handling and transport, equipment used shall be surveyed by the HSO and decontaminated to background levels prior to recommencing work. Surveys shall also be made of the ground surface in the vicinity of original drum storage to identify potential soil contamination by spilled or leaked radioactive waste. Prior to recommencing work in the area, radioactive soil areas shall be isolated to prevent tracking of radioactive contaminants about the site, and workers who entered the area should have their gloves and boots surveyed for radiation.

7.5 Packaged Laboratory Wastes (Lab Packs)

If drums known or suspected of containing discarded laboratory chemicals, reagents, or other potentially dangerous materials in small volume, or individual containers are found, the Project Manager is to be notified immediately before the drums or containers are moved or opened.

If the Project Manager and HSO approve the handling or these containers, they must be handled with extreme caution. Until otherwise categorized, they shall be considered explosive or shock

sensitive wastes. Initial handling shall be by a grappler unit constructed for explosive containment. Drums shall be palletized and overpacked, if required, prior to transport to the Lab Pack staging area for sorting, identification, repacking and/or stabilization.

Prior to handling or transporting Lab Packs from the existing drum area, personnel working in the immediate area shall be removed to a safe distance. Continuous contact with the communication base shall be maintained until handling or transporting operations are complete. An audible siren signal system, similar to that employed in conventional blasting operations, will be used to signify the commencement and cessation of Lab Pack handling or transporting activities.

7.6 Air Reactive Wastes

If the presence of an air reactive substance is verified or even suspected, the material should be immediately segregated and transported to a separate high-hazard interim storage and disposal area.

Air reactive wastes may be discovered during opening or sampling operations. Air reactive substances normally require special packaging. They may be stored under water or some other liquid to minimize air contact. They may also be found in sealed ampoules, corrugated drums, stainless steel canisters, or specially lined drums.

7.7 Gas Cylinders

Gas cylinders, when encountered, should be stored and disposed of on a special-case basis, depending on the integrity of the cylinders and type of substance they are expected to contain.

8.0 CONTAINER SAMPLING

8.1 Sampling Procedures

All drums and mechanical equipment should be grounded prior to the commencement of sampling. If the bung or container lid can be removed, sample contained liquids using a glass thief which shall then be broken and discarded within the barrel. A barrel that has a badly rusted bung or that cannot be sampled as above shall be safely entered with a remotely operated hydraulic penetrating device. All openings shall be plugged except during sampling operation.

The steps to be followed in sampling are as follows:

1. Record drum color/s, size, any markings, special drum conditions, and type of opening in the field notebook, on the sample log sheet, and, later, on the Chain-of-Custody Record. Locate the general area on a sketch of the site.

2. Stencil an identifying number on the drums and record in logbook. Consult the sampling plan for identifications.

3. Make certain that the drum/container is set on a firm base, preferably in a fully upright position.

4. Open the drum/container.

5. Insert glass tubing almost to the bottom of the drum or until a solid layer is encountered. About 1 foot of tubing should extend above the drum. Note that hydrofluoric acid will etch/eat away glass tubing.

6. Allow the waste in the drum to reach its natural level in the tube. Then cap the top of the sampling tube with a tapered stopper, ensuring liquid does not come into contact with stopper.

7. Carefully remove the capped tube from the drum, wipe the thief with a clean paper towel as it's being removed from the drum and insert the uncapped end in the sample container. Note if there is more than one layer of product in the tube. If different layers are seen, a sample of each layer must be obtained for sampling. Note the color, odor, viscosity, clarity, and thickness for each layer in the field notes. If layers occur, this mixed sample must be divided into separate layer sample containers. Do not spill liquid on the outside of the sample container. Release the stopper and allow the glass thief to drain completely into the sample container.

8. Deliver the sample (the sampling and analysis plan (SAP) will specify the amount) to a clean, wide-mouth, sample jar (the SAP will specify the size and type). If the sample is not free flowing and is taken through a bung opening, repeated sampling may be necessary.

9. Place the used sampling tube, along with paper towels or waste rags used to wipe up any spills, into an empty metal barrel for subsequent disposal. If glass tubing has been used, it may be broken and left inside the drum being sampled.

10. Cap the sample container tightly and place prelabeled and tagged sample container in a carrier.

11. Replace the bung or lids or place plastic over the drum/container and secure the temporary lid.

12. Measure the sample for radioactivity and record results in a field notebook. If the meter readings exceed 2 mR/hr, notify the Project Manager immediately.

13. Fill out the Chain-of-Custody Record and carefully pack. The finished package will be padlocked or custody-sealed for shipment to the laboratory. The preferred procedure includes the use of a custody seal across filament tape that is wrapped around the package at least

twice. The custody seal (paper, plastic, or metal) is then folded over and stuck to itself so that the only access to the samples is by cutting the filament tape or breaking the seal to unwrap the tape. The seal is signed before the package is shipped.

14. Complete the appropriate shipping documents. Drum samples are always considered to be high-hazard samples and must be shipped per DOT or International Air Transport Association (IATA) regulations.

8.2 Sample Preservation and Packaging Procedures for Drummed Waste Samples

1. No preservatives shall be used.
2. Place sample jar in a Ziploc plastic bag.
3. Place each bagged container in a l-gallon covered can containing absorbent packing material. Place and secure lid on can.
4. Mark the sample identification number on the sample jar and on the outside of the can.
5. Arrange for the appropriate transportation mode consistent with the type of hazardous waste involved.

8.3 Resealing and Siting Containers

All containers opened for sampling need to be resealed to prevent the escape of vapors and possible reactions from rainwater and air. The resealing methods will depend on the opening methods used and include the following:

- Replacing the bung, screw cap, etc.
- Replacing the lid and retaining ring.
- Placing the drum in an overpack (larger drum) when it cannot be resealed by any other method.
- If a hole is drilled, use a special rubber or plastic plug. A drum bonnet should be used to ensure that rainwater does not seep around the plug.

Once the drum is sampled and resealed, it should be left where it cannot react with other containers on the site. For a small number of drums, the storage areas may be the staging and opening area. In any case, the sampled drums should be placed in an area away from other groups of containers on the site. The reason is that slowly progressing chemical reactions can start when a container is opened and the contents exposed to air or the disturbance caused by

handling the drum. Such a reaction could take hours or even days to occur. Another reason for the segregation and identification of drums for recovery is for use as evidence.

8.4 Investigation Derived Waste (IDW)

All disposable materials which have become contaminated with unknown drum contents (paper towels, absorbent, personal protective equipment, sampling tools) must be drummed and disposed of similar to the drum contents.

9.0 REFERENCES

Basic Remediation Company (BRC) and MWH. 2005. BRC Health and Safety Plan, BMI Common Areas, Clark County, Nevada. October.

U.S. Occupational Safety and Health Administration. 29 CFR 1910.120 Hazardous Waste Operations and Emergency Response Standard, Section (j) Handling Drums and Containers.

U.S. Department of Transportation (DOT). 49 CFR 172.700 Handling and Transportation of Hazardous Materials.

U.S. Environmental Protection Agency (EPA). 40 CFR 262 Standards Applicable to Generators of Hazardous Waste.

BASIC REMEDIATION COMPANY
STANDARD OPERATING PROCEDURES
BMI COMMON AREAS
CLARK COUNTY, NEVADA

SOP-30

FIELD ANALYTICAL PROCEDURES

(pH, CONDUCTIVITY, TEMPERATURE, ORGANIC VAPOR, AND TURBIDITY)

STANDARD OPERATING PROCEDURES

SOP-30
FIELD ANALYTICAL PROCEDURES
(pH, CONDUCTIVITY, TEMPERATURE, ORGANIC VAPOR, AND TURBIDITY)

TABLE OF CONTENTS

Section **Page**

1.0 INTRODUCTION 1

2.0 DEFINITIONS 1

3.0 RESPONSIBILITIES 1

4.0 FIELD ANALYTICAL PROCEDURES 2
- 4.1 pH 2
- 4.2 Conductivity 2
- 4.3 Temperature 2
- 4.4 Organic Vapor 3
- 4.5 Turbidity 4

DISCLAIMER

THE FOLLOWING STANDARD OPERATING PROCEDURE PROVIDES GENERAL GUIDANCE FOR BRC CONTRACTORS FOR TECHNICAL ISSUES ADDRESSED DURING ENVIRONMENTAL SITE INVESTIGATION AND REMEDIATION ACTIVITIES. IT IS NOTED, HOWEVER, THAT EACH SITE IS UNIQUE AND THESE GUIDELINES ARE NOT A SUBSTITUTE FOR COMMON SENSE AND GOOD MANAGEMENT PRACTICES BASED ON PROFESSIONAL TRAINING AND EXPERIENCE. IN ADDITION, INDIVIDUAL CONTRACT TERMS MAY AFFECT THE IMPLEMENTATION OF THIS STANDARD OPERATING PROCEDURE. BRC CONTRACTORS RESERVE THE UNRESTRICTED RIGHT TO CHANGE, MODIFY OR NOT APPLY THESE GUIDELINES IN THEIR SOLE, COMPLETE, AND UNRESTRICTED DISCRETION TO MEET CERTAIN CIRCUMSTANCES, CONTRACTUAL REQUIREMENTS, SITE CONDITIONS, OR JOB REQUIREMENTS.

1.0 INTRODUCTION

This Standard Operating Procedure (SOP) is a general reference for the proper equipment and techniques for analytical field screening.

2.0 DEFINITIONS

Chain of Custody	A method for documenting the history and possession of a sample from the time of its collection through its analysis and data reporting to its final disposition.
Conductivity (electrical)	A measure of the quantity of electricity transferred across a unit area, per unit potential gradient, per unit time. It is the reciprocal of resistivity.
pH	A measure of the acidity or alkalinity of a solution, numerically equal to 7 for neutral solutions, increasing with increasing alkalinity and decreasing with increasing acidity. (Original designation for potential of hydrogen.)
Turbidity	Cloudiness in water due to suspended and colloidal organic and inorganic material.

3.0 RESPONSIBILITIES

The **Project Manager** or **Task Leader** (a qualified Nevada Certified Environmental Manager [C.E.M.]) selects site-specific water sampling methods, locations for sampling and analytes to be screened (with input from the Field Team Leader or Superintendent and project geologist), and is responsible for project quality control and field audits.

The **Field Team Leader** (a qualified Nevada C.E.M.) implements the water sampling program; supervises the project geologist/hydrogeologist and sampling technician; ensures that proper chain-of-custody procedures are observed; and that samples are sampled, transported, packaged, and shipped in a correct and timely manner.

The **Project Geologist/Hydrogeologist** (a qualified Nevada C.E.M.) ensures proper collection, documentation, and storage of groundwater samples prior to shipment to the laboratory, and assists in the packaging and shipment of samples.

The **Field Sampling Technician** assists the project geologist/hydrogeologist in the completion of tasks and is responsible for the proper use, decontamination, and maintenance of groundwater sampling equipment.

4.0 FIELD ANALYTICAL PROCEDURES

The pH, specific conductance, water temperature, and turbidity (in accordance with American Society for Testing Materials [ASTM] D-1889) will be periodically measured and recorded on a log sheet. The following sections briefly outline the procedures for measuring these parameters. This SOP is not intended to be all-inclusive, but is intended to provide general guidance regarding these procedures. Specific SOPs have applicable measurements for the type of field activity and will contain any deviations or amendments to these procedures. All field instruments shall be calibrated according to manufacturer's instructions. All field instruments will be calibrated prior to use. Calibration information shall be recorded in the field logbook. Detailed information regarding maintenance and servicing is available in the operation manual for each meter used. Servicing and maintenance information will be recorded in the field logbook..

4.1 pH

Obtain a sample where pH, temperature, and specific conductance are at equilibrium. Equilibrium is established as follows: pH variation is less than 0.2 pH units, temperature variation is less than 0.5 degrees Celsius (˚C), and less than 10 percent variation in specific conductance. Equilibrium will be established by three consecutive readings.

4.2 Conductivity

Obtain a sample where equilibrium is as follows: pH variation is less than 0.2 pH units, temperature variation is less than 0.5˚C, and less than 10 percent variation in specific conductance. Equilibrium will be established by three consecutive readings.

4.3 Temperature

Obtain a sample where equilibrium is as follows: pH variation is less than 0.2 pH units, temperature variation is less than 0.5˚C, and less than 10 percent variation in specific conductance. Equilibrium will be established by three consecutive readings.

4.4 Organic Vapor

A photoionization detector (PID) will be used to field-screen soil to determine if volatile organic compounds are present. Field screening will be performed by placing the detector within one inch of recently excavated or exposed in-place soil. The highest concentration detected will be recorded on the field notebook.

Three PID probes, each containing a different ultraviolet (UV) light source, are available for use: 9.5, 10.2, and 11.7 electron volt (eV). Gases with ionization potentials near to or less than that of the lamp will be ionized. These gases will thus be detected and measured by the analyzer. Gases with ionization potentials higher than that of the lamp will not be detected. All three detect many aromatic and large molecular hydrocarbons. The 10.2 eV and 11.7 eV probes, in addition, detect some smaller organic molecules and some halogenated hydrocarbons. The 10.2 eV probe is the most useful for environmental response work, as it is more durable than the 11.7 eV probe and detects more compounds than the 9.5 eV probe.

The 11.7 eV lamp measures the broadest range of compounds, while the 10.6 eV lamp is somewhat more selective. However, the 11.7 eV lamp provides lower resolution; that is, the lithium fluoride crystal in the 11.7 eV lamp does not allow as much light energy through, effectively making the 11.7 eV lamp “dimmer” than the 10.6eV lamp. Less energy transmitted means less ionization taking place, which reduces the potential resolution. Essentially a 10.6 eV lamp is 10 times more powerful than an 11.7 eV lamp. Therefore, for best accuracy, it is not recommended to use 11.7 eV lamps for applications requiring very high sensitivity. The 11.7 eV lamp should only be used when compounds with ionization potentials over 10.6 eV are expected. Examples include methylene chloride, chloroform, and carbon tetrachloride. (Note: see SOP-39 for additional information on PID principles and procedures.)

Flame ionization detectors (FIDs) will be used only as field screening tools, since they have the following limitations:

- FIDs measure the concentration of total organic vapors and serve as a general indicator of the level of contamination in soil.
- FIDs are not compound-specific and can detect the presence of a wide range of volatile organic compounds (e.g., the PID detects ammonia compounds and the FID detects methane).

- FIDs read in parts per million equivalent units. The readings must be adjusted based on the instrument sensitivity correction factors, calibration gas span, and estimate of the type of contaminants being measured.

- Moisture and cold temperatures can cause inaccurate meter readings during field screening.

If more accurate field-screening data are required, a headspace sample can be collected by placing soil material (in-place or recently excavated soil) into a sample container. The container is partially filled (50 to 75 percent), leaving an excess space or "headspace" above the soil. The top of the container is covered with aluminum foil and sealed with the lid. The sample is heated by placing it in the sun or near a heat source. The foil is pierced with the detector probe to determine the concentration of the organic compounds, which have volatilized from the soil and into the container headspace. The highest concentration detected is recorded on the field log.

4.5 Turbidity

Obtain a sample where equilibrium is as follows four consecutive turbidity readings with 10 percent of each other. Sample measurements will be collected using a turbidimeter that detects sample opacity. Gross turbidity measurements may be collected using an Imhoff cone.

BASIC REMEDIATION COMPANY
STANDARD OPERATING PROCEDURES
BMI COMMON AREAS
CLARK COUNTY, NEVADA

SOP-31

DRILLING EQUIPMENT DECONTAMINATION

STANDARD OPERATING PROCEDURES

SOP-31
DRILLING EQUIPMENT DECONTAMINATION

TABLE OF CONTENTS

Section **Page**

1.0 INTRODUCTION 1

2.0 DEFINITIONS 1

3.0 RESPONSIBILITIES 3

4.0 DECONTAMINATION PROCEDURES 3

DISCLAIMER

THE FOLLOWING STANDARD OPERATING PROCEDURE PROVIDES GENERAL GUIDANCE FOR BRC CONTRACTORS FOR TECHNICAL ISSUES ADDRESSED DURING ENVIRONMENTAL SITE INVESTIGATION AND REMEDIATION ACTIVITIES. IT IS NOTED, HOWEVER, THAT EACH SITE IS UNIQUE AND THESE GUIDELINES ARE NOT A SUBSTITUTE FOR COMMON SENSE AND GOOD MANAGEMENT PRACTICES BASED ON PROFESSIONAL TRAINING AND EXPERIENCE. IN ADDITION, INDIVIDUAL CONTRACT TERMS MAY AFFECT THE IMPLEMENTATION OF THIS STANDARD OPERATING PROCEDURE. BRC CONTRACTORS RESERVE THE UNRESTRICTED RIGHT TO CHANGE, MODIFY OR NOT APPLY THESE GUIDELINES IN THEIR SOLE, COMPLETE, AND UNRESTRICTED DISCRETION TO MEET CERTAIN CIRCUMSTANCES, CONTRACTUAL REQUIREMENTS, SITE CONDITIONS, OR JOB REQUIREMENTS.

1.0 INTRODUCTION

Drilling is a common activity associated with all phases of environmental investigations. Drilling methods are most commonly used to collect site data during site investigations and remedial investigations, but are also used to install vapor extraction or water wells associated with remedial actions.

Field investigations usually require invasive types of activities to gather information to evaluate the site. The investigation may require the analysis of soil and/or groundwater samples, which would be accomplished by drilling a borehole. The borehole is often converted into a well for the evaluation of vapor or groundwater conditions over time. In addition to the collection of samples for analyses, other data such as physical parameters of soils can be obtained from boreholes.

For determining the most appropriate drilling method for a site investigation, primary consideration must be given to obtaining information that is representative of existing conditions and the collection of samples that are valid for chemical analysis. The samples must not be contaminated or adversely affected by the drilling method.

Drilling associated with remedial actions may include the installation of vapor or water extraction and/or injection wells. In selecting the most appropriate drilling method for remedial actions, primary consideration must be given to completion of a well that will perform as designed.

This Standard Operating Procedure (SOP) provides a description of the decontamination procedures used during field investigations for typical drilling equipment. It is intended to be used by the Project Manager, Project Engineer, Field Team Leader, and site hydrogeologist to develop as general guidance for decontamination procedures for environmental work. The project specific sampling and analysis plans may have site-specific concerns, which would require an addition or adjustment to these procedures.

This document focuses on methods and equipment that are readily available and typically applied. It is not intended to provide an all-inclusive discussion of decontamination methods.

2.0 DEFINITIONS

Bailer	A cylindrical tool designed to remove material, both solid and liquid, from a well or borehole. A valve at the bottom of the bailer retains the material in the bailer. The three types of bailers are flat-

	valve bailer, a dart-valve bailer, and the sand pump with rod plunger.
Cone Penetrometer	An instrument used to identify the underground conditions by measuring the differences in the resistance and other physical parameters of the strata. The cone penetrometer consists of a conical point attached to a drive rod of smaller diameter. Penetration of the cone into the formation forces the soil aside, creating a complex shear failure. The cone penetrometer is very sensitive to small differences in soil consistency.
Cuttings	Formation particles obtained from a borehole during the drilling process.
Drilling Fluids or Muds	A water-based or air-based fluid used in the well drilling operation to remove cuttings from the borehole, to clean and cool the bit, to reduce friction between the drill string and the sides of the borehole, and to seal the borehole.
Dual-Purpose Well	A well that can be used as both a monitoring and extraction or injection well.
Flight	An individual auger section, usually 5 feet in length.
Heaving Formation	Unconsolidated saturated substrate encountered during drilling where the hydrostatic pressure of the formation is greater than the borehole pressure causing the sands to move up into the borehole.
Kelly Bar	A hollow steel bar or pipe that is the main section of drill string to which the power is directly transmitted from the rotary table to rotate the drill pipe and bit. The cross section of the kelly is square, hexagonal, or grooved. The kelly works up and down through drive bushings in the rotary table.
Pitch	The distance along the axis of an auger flight that it takes for the helix to make one complete 360 degree turn.
Rotary Table	A mechanical or hydraulic assembly that transmits rotational torque to the kelly, which is connected to the drill pipe and the bit. The rotary table has a hole in the center through which the kelly passes.
Split-Spoon Sampler	A thick-walled steel tube split lengthwise used to collect soil samples. The sampler is commonly lined with metal sample sleeves and is driven or pushed downhole by the drill rig to collect samples.

Thin-Walled Sampler	A sampling devise used to obtain undisturbed soil samples made from thin-wall tubing. The sampler is also known as a Shelby tube. The thin-wall sampler minimizes the most serious sources of disturbance: displacement and friction.

3.0 RESPONSIBILITIES

The **Project Manager** or **Task Leader** (a qualified Nevada Certified Environmental Manager [C.E.M.]) selects site-specific drilling methods, with input from the Field Team Leader and Site Hydrogeologist, and maintain close supervision of activities.

The **Site Hydrogeologist** (a qualified Nevada C.E.M.) selects site-specific drilling options and assists in the preparation of the technical provisions for drilling.

The **Field Team Leader** (a qualified Nevada C.E.M.) implements the selected drilling and decontamination program and assists in the selection of decontamination methods.

The **Site Safety Officer** prepares the site- and activity-specific Job Hazard Analysis and Health and Safety Plan to be followed by BRC Contractors present; reviews subcontractor Health and Safety plans and rejects or accepts them based on contract requirements; conducts pre-job tailgate safety meetings; and performs site safety observations and inspections.

The **Project Chemist** develops the selected decontamination program and assists in the oversight of the decontamination procedures.

4.0 DECONTAMINATION PROCEDURES

The purpose of decontamination and cleaning procedures during excavation, drilling, and sampling is to prevent foreign contamination of the samples and cross contamination between sites. A decontamination area and clean zone will be established for the preparation and breakdown of equipment prior to each sampling task. The decontamination area will be large enough to accommodate equipment to be used for invasive work and allow decontamination rinsate to be pumped off for temporary storage and subsequent disposal. Before use, and between each site, all equipment and other non-sampling equipment will be decontaminated with high-pressure steam, or scrubbed with a non-phosphate detergent and rinsed with water from the approved water source. If appropriate, equipment will be covered in plastic to protect it from the elements.

All equipment that may directly contact samples will be decontaminated on site. The following sampling-specific decontamination procedures will be observed:

1. Wash and scrub with detergent (laboratory grade - non-phosphate detergent).
2. Rinse with tap water.
3. Rinse with deionized water.
4. Rinse with deionized water.
5. Air dry.
6. Protect from fugitive dust and vapors.

Upon completion of the project, samples will be obtained from decontamination water resulting from final decontamination and demobilization of the equipment. One water sample from the water used for final rinse for decontamination will be collected and analyzed for the contaminants of concern at the beginning of the project.

Additional solvent and/or acid rinses may be added to the procedure, depending on the site sampling objectives. Materials Safety Data Sheets must be obtained for any hazardous chemicals used for decontamination and approved by the site safety officer prior to bringing the chemicals to the worksite. Personal protective equipment specific to the decontamination chemicals in use must be used, as specified in the health and safety plan. If these additional rinses are required, the procedures for incorporation are provided below:

1. Wash and scrub with detergent (laboratory grade - non-phosphate detergent).
2. Rinse with tap water.
3. Rinse with methanol (pesticide grade).
4. Rinse with deionized water.
5. Rinse with 1:1 nitric acid.
6. Rinse with deionized water.
7. Air dry.
8. Protect from fugitive dust and vapors.

BASIC REMEDIATION COMPANY
STANDARD OPERATING PROCEDURES
BMI COMMON AREAS
CLARK COUNTY, NEVADA

REMOVED

SOP-32

X RAY FLUORESCENCE (XRF) ANALYSIS

BASIC REMEDIATION COMPANY
STANDARD OPERATING PROCEDURES
BMI COMMON AREAS
CLARK COUNTY, NEVADA

SOP-33

WIPE SAMPLING

STANDARD OPERATING PROCEDURES

SOP-33
WIPE SAMPLING

TABLE OF CONTENTS

Section **Page**

1.0 INTRODUCTION 1

2.0 DEFINITIONS 1

3.0 RESPONSIBILITIES 2

4.0 WIPE SAMPLING GUIDELINES 2
- 4.1 Wipe Sample Collection Method 2
  - 4.1.1 Sample Containers 3
- 4.2 Decontamination 4
- 4.3 Health and Safety 4
- 4.4 Waste Management 4

5.0 REFERENCES 4

DISCLAIMER

THE FOLLOWING STANDARD OPERATING PROCEDURE PROVIDES GENERAL GUIDANCE FOR BRC CONTRACTORS FOR TECHNICAL ISSUES ADDRESSED DURING ENVIRONMENTAL SITE INVESTIGATION AND REMEDIATION ACTIVITIES. IT IS NOTED, HOWEVER, THAT EACH SITE IS UNIQUE AND THESE GUIDELINES ARE NOT A SUBSTITUTE FOR COMMON SENSE AND GOOD MANAGEMENT PRACTICES BASED ON PROFESSIONAL TRAINING AND EXPERIENCE. IN ADDITION, INDIVIDUAL CONTRACT TERMS MAY AFFECT THE IMPLEMENTATION OF THIS STANDARD OPERATING PROCEDURE. BRC CONTRACTORS RESERVE THE UNRESTRICTED RIGHT TO CHANGE, MODIFY OR NOT APPLY THESE GUIDELINES IN THEIR SOLE, COMPLETE, AND UNRESTRICTED DISCRETION TO MEET CERTAIN CIRCUMSTANCES, CONTRACTUAL REQUIREMENTS, SITE CONDITIONS, OR JOB REQUIREMENTS.

1.0 INTRODUCTION

This Standard Operating Procedure (SOP) is a general reference for the proper equipment and techniques for wipe sampling. The purpose of these procedures is to enable the user to collect representative and defensible wipe samples and to facilitate planning of the field sampling effort. These techniques should be followed whenever applicable, although site-specific conditions or project-specific plans may require adjustments in methodology.

To be valid, a wipe sample must be representative of the particular area being sampled. The integrity of the sample must be maintained from the time of collection to the time of analysis in order to minimize changes in parameters. The primary considerations in obtaining a representative wipe are to avoid collecting samples from rough or uneven surfaces, to avoid physically or chemically altering the wipe sample due to improper sampling techniques, handling, or transport, and to document that proper sampling procedures have been followed.

This SOP describes suggested methods for sample collection and handling, decontamination, and documentation procedures.

2.0 DEFINITIONS

Chain of Custody	Method for documenting the history and possession of a sample from the time of its collection through its analysis and data reporting to its final disposition.
Decontamination	A variety of processes used to clean equipment that contacted formation material or groundwater that is known to be or suspected of being contaminated.
Preservative	An additive (usually an acid or a base) used to protect a sample against decay or spoilage, or to extend the holding time for a sample.
Wetting solvent	A solvent (usually methanol or de-ionized water) used to wet the wipe prior to sample collection.

3.0 RESPONSIBILITIES

The **Project Manager** selects the site-specific wipe sampling methods, locations for sample collection, areas to be sampled, and analytes to be analyzed, with input from the field team leader and project chemist, and is responsible for project quality control and field audits.

The **Field Team Leader** (a qualified Nevada Certified Environmental Manager [C.E.M.]) implements the wipe sampling program, supervises the project sampling technician, ensures that proper chain-of-custody procedures are observed, and that samples are sampled, transported, packaged, and shipped in a correct and timely manner.

The **Project Chemist** assists the project team in understanding proper collection, documentation, and storage of wipe samples prior to shipment to the laboratory.

The **Field Sampling Technician** assists the project technician in the completion of tasks and is responsible for the proper use, decontamination, and maintenance of wipe sampling equipment.

4.0 WIPE SAMPLING GUIDELINES

To obtain representative samples, the site and contaminants of concern must be understood. The strategy for deciding how a specific sampling strategy was arrived at should be documented so that sample results can be interpreted. The laboratory will supply the field team with the necessary equipment to collect wipe samples. Questions that arise during sample collection should be directed to the project chemist. Changes in the following procedures should not be performed until confirmation from the project chemist regarding the impact.

4.1 Wipe Sample Collection Method

Prior to sampling, the area should be cleared of any debris or potential cross-contamination from other activities. One wipe sample should be taken from a 100-square centimeter (cm) surface area (10 cm by 10 cm) at each point for sample collection. The surface should be flat. Wipes are usually composed of filter paper, gauze or glass wool. Wipe samples should be collected from flat, smooth surface areas of at least 10 cm by 10 cm. Wipe samples should be collected from areas expected to be representative of contaminant distribution, such as areas with visible staining.

Samples collected for volatile organic analyses should be collected using a wipe that is wet with the appropriate solvent for the analyte to be collected. Samples collected for metals analysis should be collected using a wipe that is wet with deionized water.

One 10-cm square template should be used for each sample location. With the sampling media, wipe downward and then across the template as shown below:

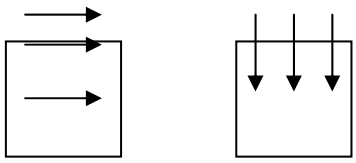

Wipe in both directions.

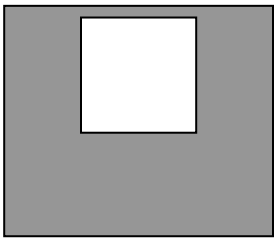

Template

Upon completion of the sample collection, the wipe sample is placed in a glass jar and the appropriate preservative is added to the sample container. The wipe samples shall be placed in separate containers and stored in a cooler packed with ice for transportation to the laboratory.

4.1.1 Sample Containers

A complete set of sample containers should be prepared by the laboratory prior to going into the field. The laboratory should provide the proper containers with the required preservatives. The laboratory's quality manual should provide a complete description of the procedures used to clean and prepare the containers. The containers should be labeled in the field with the date, sample identification, project name, collectors' name, time of collection, parameters to be analyzed, and preservative. The sample containers should be kept in a cooler (at zero plus or minus 2 degrees centigrade) until they are received by the laboratory. One cooler should be used to store the unfilled bottles and another to store the samples. All sample bottles and equipment will be kept away from fuels and solvents.

When wipe samples are to be analyzed for volatile organic analyses, samples will be carefully collected in a manner than minimizes volatilization.

4.2 Decontamination

The general decontamination procedure for all non-dedicated wipe sampling equipment (stencil for 100 square cm surface) consists of the following steps:

1. Scrub and wash with laboratory-grade detergent (such as Alconox®) and tap water.

2. Rinse with reagent-grade solvent (such as methanol) and allow to air dry.

3. Triple rinse with deionized water.

As with other procedures documented in this SOP, decontamination procedures may be determined by the client or regulatory agency involved in the project.

4.3 Health and Safety

The project Health and Safety Plan (BRC and MWH 2005) should be followed and appropriate safety equipment and personal protective equipment must be used.

The use of solvents and preservatives requires that Materials Safety Data Sheets be available for those chemicals. When options are available, and consistent with the sampling method requirements, the solvent with the lowest toxicity or hazard potential (flammability, toxicity) is selected.

4.4 Waste Management

Any investigation derived wastes, such as spent or excess solvent, cleaning materials, preservatives, or decontamination materials should be managed according to SOP-34, "Investigation Derived Waste Management."

5.0 REFERENCES

Basic Remediation Company (BRC) and MWH. 2005. BRC Health and Safety Plan, BMI Common Areas, Clark County, Nevada. October.

BASIC REMEDIATION COMPANY
STANDARD OPERATING PROCEDURES
BMI COMMON AREAS
CLARK COUNTY, NEVADA

SOP-34

INVESTIGATIVE DERIVED WASTE (IDW) MANAGEMENT

STANDARD OPERATING PROCEDURES

SOP-34
INVESTIGATIVE DERIVED WASTE (IDW) MANAGEMENT

TABLE OF CONTENTS

Section **Page**

1.0 INTRODUCTION 1

2.0 DEFINITION OF IDW 1

3.0 GOVERNING REQUIREMENTS 1

4.0 IDW MANAGEMENT CONSIDERATIONS 2

5.0 DISPOSAL ALTERNATIVES 2

6.0 FIELD COMPLIANCE WITH REQUIREMENTS 3

DISCLAIMER

THE FOLLOWING STANDARD OPERATING PROCEDURE PROVIDES GENERAL GUIDANCE FOR BRC CONTRACTORS FOR TECHNICAL ISSUES ADDRESSED DURING ENVIRONMENTAL SITE INVESTIGATION AND REMEDIATION ACTIVITIES. IT IS NOTED, HOWEVER, THAT EACH SITE IS UNIQUE AND THESE GUIDELINES ARE NOT A SUBSTITUTE FOR COMMON SENSE AND GOOD MANAGEMENT PRACTICES BASED ON PROFESSIONAL TRAINING AND EXPERIENCE. IN ADDITION, INDIVIDUAL CONTRACT TERMS MAY AFFECT THE IMPLEMENTATION OF THIS STANDARD OPERATING PROCEDURE. BRC CONTRACTORS RESERVE THE UNRESTRICTED RIGHT TO CHANGE, MODIFY OR NOT APPLY THESE GUIDELINES IN THEIR SOLE, COMPLETE, AND UNRESTRICTED DISCRETION TO MEET CERTAIN CIRCUMSTANCES, CONTRACTUAL REQUIREMENTS, SITE CONDITIONS, OR JOB REQUIREMENTS.

1.0 INTRODUCTION

This Standard Operating Procedure (SOP) is intended to assist the field technical staff in determining the appropriate manner in which to handle investigation-derived wastes (IDW). Although this document is intended to provide a general overview of appropriate IDW management practices, it is the Project Manager's responsibility to ensure that all IDW is properly managed in accordance with applicable federal, state, and local law, the contract requirements, and good professional judgement.

2.0 DEFINITION OF IDW

For purposes of this document, the term IDW includes drilling cuttings, drilling muds, purged well water, decontamination fluids, sample residues, decontamination fluids, personal protective equipment (PPE), and other disposable equipment that is generated from sampling and investigation activities.

3.0 GOVERNING REQUIREMENTS

Generally, the management of IDW must meet the following criteria:

- It must be protective of human health and the environment.
- It must comply with the applicable or relevant and appropriate requirements (ARARs) unless the ARAR is waived by the applicable regulatory authority. Potential ARARs for IDW include regulations under the Resource Conservation and Recovery Act (RCRA), which include the underground injection control regulations and the Land Disposal Restrictions (LDR); the Clean Water Act; the Clean Air Act; the Toxic Substances Control Act (TSCA); and applicable State environmental laws. To the extent that U.S. Environmental Protection Agency (USEPA) has issued regulations relating to cleanup standards for specific chemicals, those standards must normally be followed unless either a waiver has been obtained or different site-specific cleanup standards have been established by the appropriate regulatory authority.

As USEPA stated on March 8, 1990 (55 *Federal Register* 8756), "… the field investigation team should, when handling, treating or disposing of investigation-derived waste on-site, conduct such activities <u>in compliance with ARARs to the extent practicable, considering the exigencies of the situation</u>" (emphasis added). In December 1990, USEPA stated in its DRAFT directive 9345.3-02: "This means that, as a general matter, actions taken at the [site inspection] that leave conditions essentially unchanged (such as returning soil cuttings to the location from which they were taken) should not require a detailed analysis of ARARs or assurance that conditions at the

site after the action is taken will comply with the ARARs. At the same time, site personnel should be conscious of whether their handling of [IDW] could create additional hazards at the site."

4.0 IDW MANAGEMENT CONSIDERATIONS

In establishing the site-specific plans for handling and managing the IDW, the Project Manager is expected to apply good professional judgement within the context of the applicable ARARs, the contract requirements, the protection of human health and the environment and the exercise of cost efficiency within the context of good health and safety practices.

In selecting the appropriate management option, the Project Manager should consider the following:

- The nature of the contaminants, concentrations, and total volume of IDW
- The media potentially impacted by the various management options
- The location and type of receptors likely to be impacted
- The potential exposure to site workers
- The potential for negative environmental impacts
- The potential minimizing the volume and toxicity of the IDW
- The potential for mitigating potential harmful effects

Soil cuttings and other contaminated soils may, in appropriate circumstances, be buried within the area of contamination (AOC) so long as such burial does not create a significant threat to human health or the environment.

5.0 DISPOSAL ALTERNATIVES

The following are general guidelines for the disposal for IDW, based on a review of existing USEPA guidance documents. They may be superseded by applicable state or local laws or other ARARs.

- Soils—Drill cuttings and similar contaminated soils may normally be buried within the AOC as long as such disposal does not pose a significant or immediate threat to human health or the environment. If the soils are heavily contaminated or highly toxic, the cuttings and contaminated soils should be placed in an appropriate container or waste pile and prepared

for disposal (on-site or off-site). Where the soils are placed in containers, the label needs to identify the owner as the generator.

- Hazardous water or other aqueous liquid—Generally, hazardous water and other aqueous liquids may not be disposed of within the AOC because of the likelihood of migration out of the AOC. Such hazardous water or other aqueous liquids should normally be drummed and disposed of at a publicly-owned treatment works (POTW) or treatment storage or disposal facility, as appropriate.

- Decontamination Fluids—Decontamination fluids should generally be drummed and turned over to the client for appropriate disposal or disposed of at an appropriate POTW.

- Non-hazardous water—Water that had been deemed non-hazardous based on prior sampling (e.g., upgradient samples taken for purposes of identifying background levels) may normally be disposed of in the vicinity of the well.

- PPE and Disposable Equipment—Disposable PPE and equipment that has been decontaminated may be double-bagged and placed in appropriate solid waste containers. Such bags should not be placed in public-accessible waste bins or similar facilities where public perceptions may result in concerns that Basic Remediation Company (BRC) is illegally disposing of hazardous wastes.

- Materials Pending Analysis—Materials that are being held pending chemical analysis should be properly containerized and marked as potentially hazardous, pending analysis. Such materials reasonably believed to be hazardous should be treated as if they were hazardous pending such analytical confirmation.

6.0 FIELD COMPLIANCE WITH REQUIREMENTS

Compliance with the applicable legal requirements can generally be achieved by complying with the following general principals:

- Identify the contaminants. The analysis can be based on reasonably available information and the application of reasonable professional judgment. Generally, actual testing is not required.

- Minimize the volume of the IDW. To the extent feasible, IDW containing hazardous substances or wastes should be carefully segregated from other non-hazardous IDW in order to minimize the volume of IDW that must be disposed of as hazardous waste.

- Determine the ARARs. Pay particular attention to RCRA, TSCA and applicable state requirements. Remember that individual State requirements may be more stringent than the corresponding federal requirements. Waivers should be sought when justified.

- Delineate the AOC. The AOC should be delineated based on existing information and visual observation. Hazardous soils can generally be moved within the AOC without triggering the

LDRs. The National Contingency Plan adopted the AOC unit concept defined as an area of contiguous contamination. This concept equates to a RCRA land disposal unit.

- Bury RCRA hazardous soil cuttings within the AOC unit. If this action does not significantly increase the hazard to human health or the environment, containerization or testing is not normally required. (Note: The AOC concept only applies to contaminated soils and sediments that originated within the AOC.)

- Properly containerize potentially contaminated used PPE, disposable equipment, decontamination fluids, and groundwater for disposal.

- Comply with applicable containerization, labeling, and storage and record-keeping requirements.

BASIC REMEDIATION COMPANY
STANDARD OPERATING PROCEDURES
BMI COMMON AREAS
CLARK COUNTY, NEVADA

SOP-35

WASTE SAMPLING

STANDARD OPERATING PROCEDURES

SOP-35
WASTE SAMPLING

TABLE OF CONTENTS

Section **Page**

1.0 INTRODUCTION 1

2.0 WORK AREA PREPARATION 1
- 2.1 Health and Safety Preparation 1
- 2.2 Decontamination and Clean Zone Preparation 2
- 2.3 Sample Equipment Preparation 2

3.0 SAMPLE COLLECTION 2
- 3.1 Drums Containing Liquid Waste 3
- 3.2 Drums Containing Solids and Debris Waste 3
- 3.3 Roll-Off Bins Containing Solids and Debris Waste 3
- 3.4 Tanks Containing Liquid Waste 3
- 3.5 Vacuum Trucks Containing Liquid Waste 4

4.0 SAMPLE DESCRIPTION 4

5.0 DECONTAMINATION PROCEDURES 4
- 5.1 Equipment 4
- 5.2 Personnel 5

6.0 SAMPLE PACKAGING 5

7.0 DOCUMENTATION REQUIREMENTS 6
- 7.1 Log Book 6
- 7.2 Sample Labels 7
- 7.3 Chain-of-Custody Forms 7

LIST OF ATTACHMENTS

Attachment 1 Sampling Equipment Descriptions

DISCLAIMER

THE FOLLOWING STANDARD OPERATING PROCEDURE PROVIDES GENERAL GUIDANCE FOR BRC CONTRACTORS FOR TECHNICAL ISSUES ADDRESSED DURING ENVIRONMENTAL SITE INVESTIGATION AND REMEDIATION ACTIVITIES. IT IS NOTED, HOWEVER, THAT EACH SITE IS UNIQUE AND THESE GUIDELINES ARE NOT A SUBSTITUTE FOR COMMON SENSE AND GOOD MANAGEMENT PRACTICES BASED ON PROFESSIONAL TRAINING AND EXPERIENCE. IN ADDITION, INDIVIDUAL CONTRACT TERMS MAY AFFECT THE IMPLEMENTATION OF THIS STANDARD OPERATING PROCEDURE. BRC CONTRACTORS RESERVE THE UNRESTRICTED RIGHT TO CHANGE, MODIFY OR NOT APPLY THESE GUIDELINES IN THEIR SOLE, COMPLETE, AND UNRESTRICTED DISCRETION TO MEET CERTAIN CIRCUMSTANCES, CONTRACTUAL REQUIREMENTS, SITE CONDITIONS, OR JOB REQUIREMENTS.

1.0 INTRODUCTION

This Standard Operating Procedure (SOP) is required for waste sampling. Listed below are the four basic steps for the collection of samples for analysis:

1. Work Area Preparation
   - Health and safety preparation
   - Establishing decontamination and clean zones
   - Sample equipment preparation

2. Sample Collection
   - Selection of equipment
   - Type of sample
   - Containers/preservation
   - Sample identification documentation

3. Equipment and Personnel Decontamination
4. Documentation Requirements

U.S. Environmental Protection Agency (USEPA) SW-846 provides details regarding sampling procedures.

2.0 WORK AREA PREPARATION

2.1 Health and Safety Preparation

The technician must collect and prepare the equipment necessary for health and safety protocol adherence during waste sampling activities. Minimum health and safety protocol adherence includes selection and use of proper personal protective equipment (PPE) including gloves, safety glasses, hard hat, protective clothing (coveralls or standard clothes designated for sampling and steel toe boots), and monitoring equipment. Specific PPE and monitoring requirements will be identified in the site specific health and safety plan and Sampling Analysis Plan (SAP).

2.2 Decontamination and Clean Zone Preparation

A decontamination area and clean zone will be established for equipment and personnel prior to each sampling task. All solids and fluids generated by decontamination will be containerized and transferred to an approved storage location for characterization and disposal.

2.3 Sample Equipment Preparation

A sampling equipment staging area will be established to ensure efficiency and minimize equipment contamination during waste sampling activities. If appropriate, equipment will be covered in plastic to protect it from the elements. Equipment necessary for the sampling effort will be determined prior to site mobilization. Size and number of sample containers for each waste stream will be determined by the laboratory, project requirements and the desired test methods. It is necessary to contact the laboratory prior to sampling to determine appropriate sample volumes.

3.0 SAMPLE COLLECTION

Specific matrices require varying sampling techniques and equipment. The objective of this section is to ensure that representative samples of each waste stream are collected. This section describes the basic equipment and guidelines for waste sampling. See Attachment 1 for equipment diagrams and descriptions.

Waste sampling may be required to meet one of the following objectives:

- Field identification of waste using HAZCAT™ or other test kits
- Waste consolidation
- Waste storage permit requirements
- Waste identification and characterization
- Waste profiling for transportation and disposal

In some cases, one waste stream may consist of multiple drums. The frequency of drum sampling (i.e., 10%, 20%, 50%) must be determined and will depend on the sampling objective. Therefore, it is important to identify the objectives of each waste sampling effort. Refer to the project SAP for specific sampling requirements.

3.1 Drums Containing Liquid Waste

For drums containing free-flowing liquids and slurries, a coliwasa (for single and multiphase liquids), bomb sampler (for single-phase liquid), or dipper (for single-phase liquid) should be used to collect samples. For sludges or moist powders, a trier should be used to collect samples. If multiple phases are present, a representative sample of each phase should be collected and consolidated. The sample volume of each phase should equal the percent (%) volume contained in the drum. The sample is then placed in the appropriate sample containers. See SOP-29 for detailed drum sampling procedures.

3.2 Drums Containing Solids and Debris Waste

For dry powders, a stainless steel scoop should be used for the collection of samples. The scoop is used to collect adequate sample volume for analysis. Care must be taken to collect a representative sample from the drums. A composite sample should be collected for debris waste. A representative of each type of debris contained in the drum (e.g., rags, wood, metal, plastic) should be collected and composited into one sample container. The sample volume of each type of debris should be equivalent to the percent weight and volume of that debris in the drum.

3.3 Roll-Off Bins Containing Solids and Debris Waste

For dry powders, a stainless steel scoop, shovel, or thief should be used. These devices will allow collection of adequate sample volume for analysis. Care must be taken to collect a representative sample from the roll-off bin. For example, if multiple layers exist, sample volumes based on percent weight and volume of each layer in the roll-off are consolidated into one sample container. A composite sample should be collected for debris waste. A representative of each type of debris contained in the drum (e.g., rags, wood, metal, plastic) should be collected and composited into one sample container. The sample volume of each type of debris should be equivalent to the percent weight and volume of that debris in the roll-off.

3.4 Tanks Containing Liquid Waste

For free-flowing liquids, a bomb sampler or the outlet spigot (if available) should be used for collecting samples. For sludges and moist powders, a trier should be used for collecting samples. The sample is then placed in the appropriate sample containers (see SOP-36 for detailed tank sampling procedures).

3.5 Vacuum Trucks Containing Liquid Waste

For free-flowing liquids, a weighted bottle or the outlet spigot (if available) should be used for collecting samples. Check the vacuum pressure gauge prior to opening any valve or hatch on the tanker. For sludges and moist powders, a trier should be used for collecting samples. Care must be taken to collect a representative sample from the vacuum tank. The sample is then placed in the appropriate sample containers.

4.0 SAMPLE DESCRIPTION

The sample description will begin with a designation to indicate the site location within the installation. The site location will then be followed by qualifiers to track the sample. These qualifiers will indicate source of the sample (e.g., waste number 1), matrix of sample (e.g., solid, debris, powder, etc.), and type of sample (e.g., composite or grab). Some examples of acceptable qualifiers are as follows:

S = solid
L = liquid
P = powder
C = cake
SL = slurry
D = debris
SD = sludge

5.0 DECONTAMINATION PROCEDURES

This section describes decontamination procedures for equipment and personnel.

5.1 Equipment

All equipment that is exposed to the waste (e.g., coliwasa, drum thief, trier, or dipper) will be decontaminated on site in the established decontamination area. The following sampling-specific decontamination procedures will be observed:

1. Wash and scrub with detergent (non-phosphate).
2. Rinse with tap water.
3. Triple rinse with deionized water.
4. Air dry.
5. Protect from fugitive dust and vapors.

5.2 Personnel

All personnel who are exposed to the waste during sampling activities will undergo a decontamination process. See the site-specific health and safety plan for decontamination procedures.

6.0 SAMPLE PACKAGING

The following guidelines should be adhered to when preparing samples for shipment. Specific laboratories may have additional requirements. Samplers should contact the laboratory for additional guidance.

1. Tighten sample bottle lids "hand" tight and place clear tape over sample labels in non-volatile organic compound (VOC) samples.
2. Wrap sample bottles with plastic "bubble pack" or pack in pre-formed packing material and tightly pack in a cooler for shipment.
3. Place wet ice in double Ziploc™ bags (to prevent leakage) around soil and water samples to maintain necessary temperatures during shipment. All wet ice will be sealed in double plastic bags to prevent leakage. Care will be taken to ensure that ice will not come in direct contact with sample bottles (to prevent freezing and breakage).
4. Fill any excess space within coolers with bubble pack to prevent possible breakage of sample bottles during shipment.
5. Attach original COC form to cooler.
6. Tape the cooler drain shut.
7. Secure the cooler lid with strapping tape.
8. Place the laboratory address and/or airbill label on the top of the cooler.
9. Affix custody seal on the front and side of the cooler, and cover the custody seals with clear tape.

Samples will be shipped to the appropriate analytical laboratory via Federal Express. In no case will samples for analytical chemical analysis be allowed to remain in temporary storage at the sample staging area for more than 48 hours.

7.0 DOCUMENTATION REQUIREMENTS

The following minimum documentation procedures are required for all waste sample collection efforts. Proper chain-of-custody (COC) documentation will be maintained throughout sampling and collection. COC records will be maintained for each sample collected. Requirements to assure proper documentation are outlined below.

7.1 Log Book

The Log Book is a hardbound, weatherproof book that serves primarily as a daily log of the activities carried out. Each sampling employee will maintain a logbook. All entries will be accurate, legible, and in indelible ink. No pencils or erasures will be used. Mistakes in sampling logbooks will be crossed out with one line, initialed, and dated by the person making the correction. Daily entries into the logbooks will contain the following information as a minimum:

- Calibration records
- Field parameter observations
- Date/time of sample collection
- Start time
- Location of sampling points
- Weather
- Description of deviations from sampling plan(s)
- Personnel present
- Visitors
- Sample description
- Sample identification
- General observations
- Signatures of personnel responsible for observations

In addition, at the conclusion of each day in the field, each member of the field crew will review each page of the notebook for errors or omissions. Blank pages or sections will be crossed out, initialed, and dated by the responsible field team member. Sampling personnel will then date and sign after the final entry for the day.

7.2 Sample Labels

Labels will be of a permanent type that will remain intact and affixed during refrigeration. At the time of sample collection, the time, date, sampler's identification (initials) and sample type will be noted on the sample label. Additionally, information regarding preservation methods and sample location will be included on the label. Non-water soluble ink will be used for labeling purposes. Clear plastic tape will be placed over non-VOC sample labels to ensure preservation of information.

7.3 Chain-of-Custody Forms

A COC form will be used to record the samples taken and the analyses requested. Information recorded will include time and date of sample collection, sample location, sample number, the type of sample, the sampler's signature, the required analysis, and the type of containers and preservatives used. In addition, the necessary information for entering data tracking information into the database will be included on the COC.

A copy of the COC form will be retained by the sampler prior to shipment. Shipping receipts will be signed and filed as evidence of custody transfer between field sampler and courier, and courier and laboratory.

The sample should be delivered to the laboratory for analysis as soon as practicable. The sample must be accompanied by the COC form. The sample must be delivered to the laboratory authorized sample custodian.

ATTACHMENT 1

SAMPLING EQUIPMENT DESCRIPTIONS

COLIWASA

The Coliwasa consists of a glass, plastic, or metal tube equipped with an end closure such as a plug or valve that can be opened and closed while the tube is submerged in the material to be sampled.

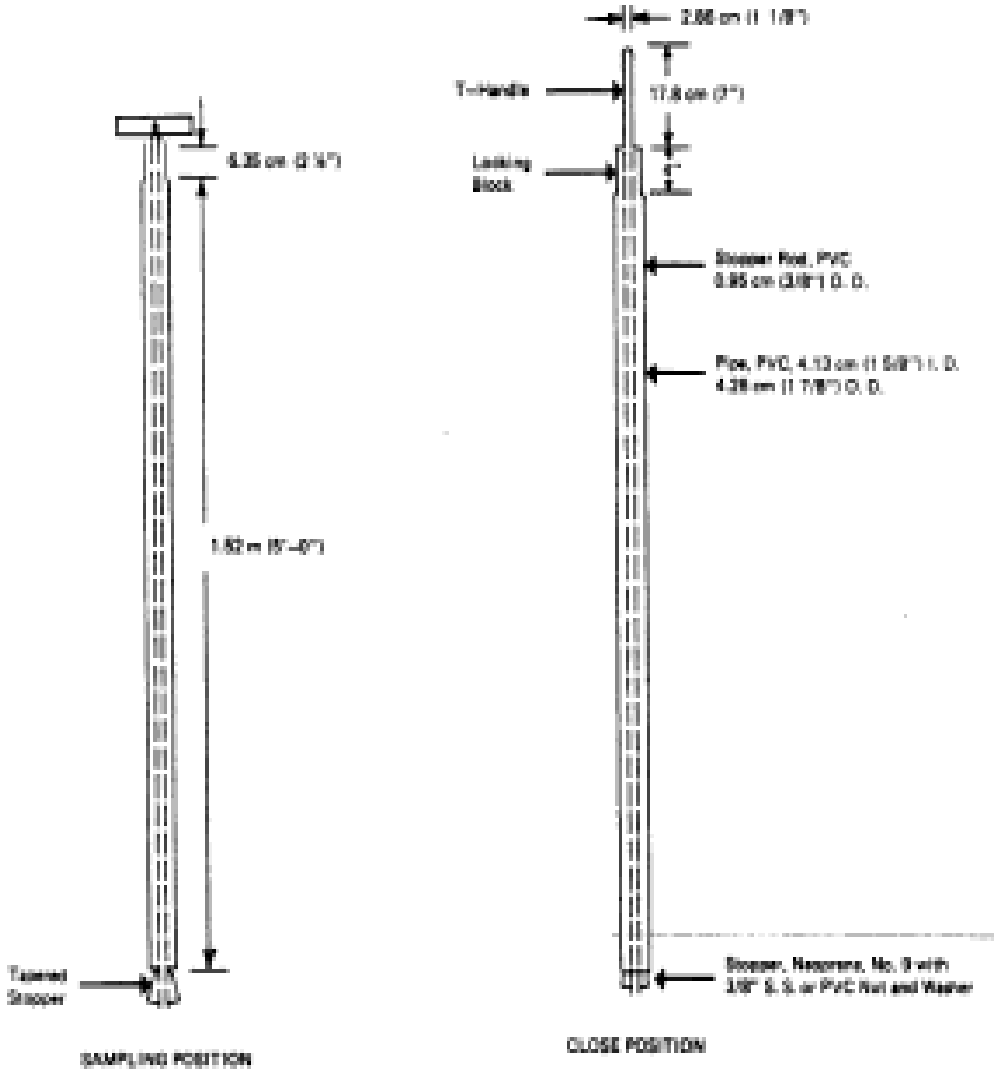

SCOOPS AND SHOVELS

Scoops and shovels are used to sample granular or powdered material in bins, shallow containers, and conveyor belts. Scoops are available in stainless steel and plastic.

DIPPERS

The dipper consists of a glass or plastic beaker clamped to the end of a two- or three-piece telescoping aluminum or fiberglass pole that serves as the handle. A dipper samples liquids and free-flowing slurries. Dippers may need to be fabricated by the sampler.

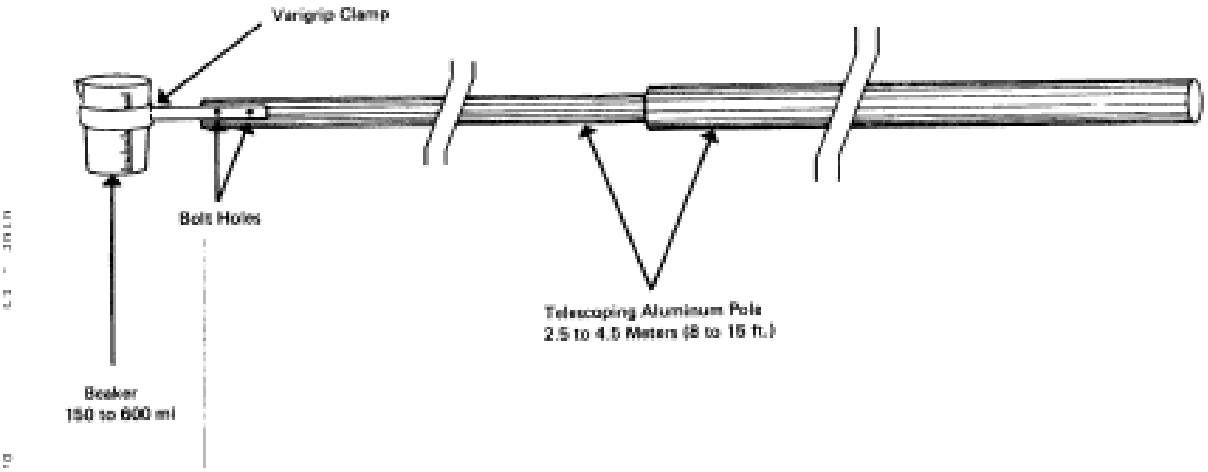

AUGER

An auger consists of sharpened spiral blades attached to a hard metal central shaft. An auger samples hard or packed solid wastes or soil. Augers are available at hardware and laboratory supply stores.

DRUM THIEF

The drum thief is a simple hollow tube (typically glass, plastic or metal) that is inserted into the container to be sampled. Once inserted, the end is covered and the thief is withdrawn from the container. The sample is retained in the tube and is transferred to a sample container to retain the sample as the tube is withdrawn. Some loss of volatile contaminants can occur during sample handling.

BOMB SAMPLERS

Bomb samplers are used to take liquid samples from discrete depths in drums, tanks, and surface water bodies. They can be used to take samples for all contaminant groups. Bomb samplers can be used to depths up to about 500 feet. Discrete liquid samplers are generally used at shallower depths.

A bomb sampler consists of a tubular sample chamber that is attached to a cable. The sample chamber is lowered into the container or surface water body to be sampled on the cable. When the chamber reaches the desired depth of sampling, it is opened by a second cable and allowed to fill. The bomb is retrieved, and samples are transferred to other containers for shipment to a laboratory for analysis. Bomb samplers are available in stainless steel and Teflon and are, thus, suitable for obtaining high-quality samples for all analyte groups, although some loss of volatile contaminants can occur during sample transfer. Bomb samplers can be used to sample up to 500 feet deep.

TRIER

A trier consists of a tube cut in half lengthwise with a sharpened tip that allows the sampler to cut into sticky solids and to loosen soil. A trier samples moist or sticky solids with a particle diameter less than one-half the diameter of the trier. A large trier can be fabricated.

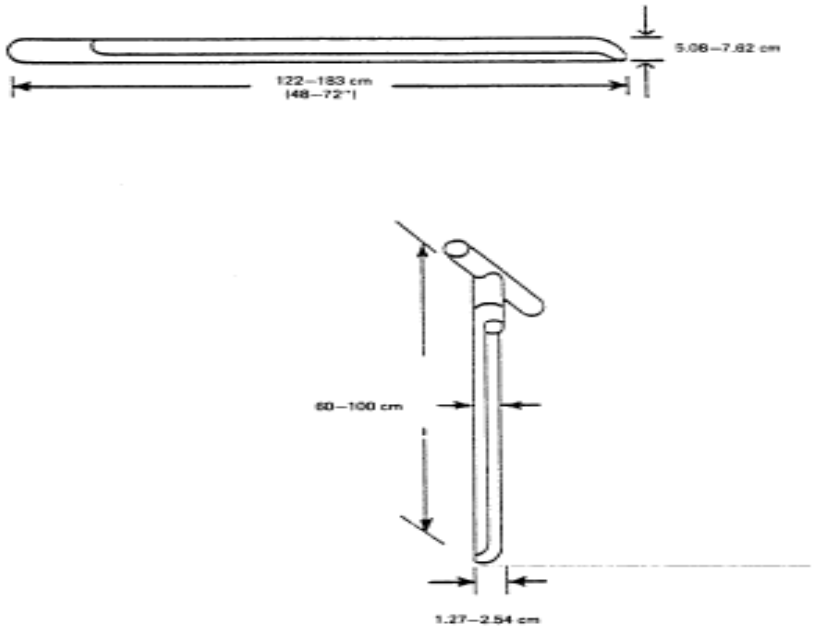

BASIC REMEDIATION COMPANY
STANDARD OPERATING PROCEDURES
BMI COMMON AREAS
CLARK COUNTY, NEVADA

SOP-36

TANK SAMPLING

STANDARD OPERATING PROCEDURE

SOP-36
TANK SAMPLING

TABLE OF CONTENTS

Section **Page**

1.0 INTRODUCTION 1

2.0 SAMPLING STRATEGY 1

3.0 SAMPLING EQUIPMENT 2

4.0 SAMPLING PROCEDURES 2
- 4.1 Sampling Aqueous Tank Liquids 2
- 4.2 Sampling Tank Sludges Placed in Containers 3
- 4.3 Sampling Tanks with Unknown Contents 3
  - 4.3.1 Sampling Product and/or Liquids in Tanks with Unknown Contents 4
  - 4.3.2 Sampling Sludges in Tanks with Unknown Contents 4

5.0 REFERENCES 5

DISCLAIMER

THE FOLLOWING STANDARD OPERATING PROCEDURE PROVIDES GENERAL GUIDANCE FOR BRC CONTRACTORS FOR TECHNICAL ISSUES ADDRESSED DURING ENVIRONMENTAL SITE INVESTIGATION AND REMEDIATION ACTIVITIES. IT IS NOTED, HOWEVER, THAT EACH SITE IS UNIQUE AND THESE GUIDELINES ARE NOT A SUBSTITUTE FOR COMMON SENSE AND GOOD MANAGEMENT PRACTICES BASED ON PROFESSIONAL TRAINING AND EXPERIENCE. IN ADDITION, INDIVIDUAL CONTRACT TERMS MAY AFFECT THE IMPLEMENTATION OF THIS STANDARD OPERATING PROCEDURE. BRC CONTRACTORS RESERVE THE UNRESTRICTED RIGHT TO CHANGE, MODIFY OR NOT APPLY THESE GUIDELINES IN THEIR SOLE, COMPLETE, AND UNRESTRICTED DISCRETION TO MEET CERTAIN CIRCUMSTANCES, CONTRACTUAL REQUIREMENTS, SITE CONDITIONS, OR JOB REQUIREMENTS.

1.0 INTRODUCTION

This Standard Operating Procedure (SOP) is applicable to opening and sampling closed containers or drums (120 gallons or less) on uncontrolled hazardous substance sites. SOP-35 describes the procedures for waste sampling in general and SOP-29 describes the procedures for drum sampling.

The objective of sampling is to provide a representative sample of the tank contents and then determine the chemical and/or physical properties of those contents. Information from the sample(s) will be used to determine the following:

- Proper handing and disposal of the contents
- Regulatory compliance (i.e., transportation)
- Confirmation of contents versus the label, manifest or other documentation
- Litigation support (in some cases)

The guidance presented is based on field experience working with containers on uncontrolled hazardous substance sites. In many cases, hard and fast rules cannot be given, and professional judgment is required because uncontrolled variables are involved. For example, no one can be absolutely certain of the contents of a container. Labels cannot be absolutely trusted; only educated guesses can be made by a thorough review of all available background data, such as possible source of the wastes. This SOP does not address safety concerns associated with tank sampling. Health and safety issues are addressed in the project Health and Safety Plan (BRC and MWH 2005).

2.0 SAMPLING STRATEGY

Prior to sampling a small tank or similar container, information regarding the contents of the tank and the condition of the container(s) is reviewed in order to determine proper handling/sampling method(s). Information regarding tank contents may be available from personal knowledge of the waste stream, previous analysis, shipping manifest, labels or a variety of other sources. Unless the information is obtained from a reliable source, the information may or may not confirm the contents of the container. Precautions should always be taken to ensure the health and safety of the worker with regard to unknown hazards. Information regarding tank contents will assist in the determination of the proper and safe handling and sampling of the

tank/container. Tank contents will determine how the sampling will take place. Tank contents that may be radioactive, flammable, an oxidizer, base or acid, photosensitive, etc., may require special handling.

The tank's condition will also determine the handling and sampling of the contents. When applicable, the condition of the tank should be noted. Leaks, holes, dents, bulges (contents under pressure), and general tank condition may reveal hidden problems, although not necessarily all of them.

The physical composition of the tank contents is an important factor when determining how to sample the tank. Tanks often hold multi-phase (liquid and solid or semisolid) contents, or in some cases stratified contents such as oil and water. Sludges can contain a high proportion of liquids like oil or water, which is not visible as a free-phase. Tanks can also contain mixed materials such as waste, including unconsolidated materials such as sand or soil, or consolidated materials such as concrete. All of these will determine the type of sampling procedure as well as the type of equipment that will be used to sample the tank.

3.0 SAMPLING EQUIPMENT

Sampling equipment will be determined by the contents of the tank, their physical state, and the type of sample to be collected. ASTM Standard Guide for Sampling of Drums and Similar Containers by Field Personnel (ASTM D 6063-96 (Reapproved 2001)) lists several types of sampling equipment and their associated variables and limitations, and equipment selection.

4.0 SAMPLING PROCEDURES

4.1 Sampling Aqueous Tank Liquids

Aqueous tank liquids and rinse water from cleaning will be placed in holding tanks and sampled for disposal requirements. Either grab or in-place samples will be taken of tank liquids and rinse water. Grab samples will be collected using a stainless steel bucket, ladle, or spoon. A collection device such as a Teflon® bailer will be used to obtain in-place water samples. Sampling devices will either be disposable or will be decontaminated prior to use.

The sample will be poured directly into an appropriate sample container from the sampling device. If the volume required to fill all containers for a sample exceeds the volume of the collection device, an aliquot from each retrieval will be placed into each container until all are

filled. The sampling device will be lowered into the holding tank to the same depth when it takes more than one volume of the sample collection device to fill the containers.

Water samples for volatile organic compounds (VOCs) will be collected by slowly lowering the sampling device into the water to avoid degassing. The sample will be transferred from the sampling device into 40-milliliter vials (with preservative) with a minimum of agitation. The vials will be filled to a level creating a convex meniscus on the neck. The top of the vial will be carefully closed and secured with the lid. The vial will be inspected to verify that the sample is air-free. If air is present in the vial, it will be opened, and a new meniscus will be formed with the sample water. If an air-free sample is not achieved in two attempts, the sample will be discarded, and the procedure will be repeated.

4.2 Sampling Tank Sludges Placed in Containers

Tank sludges will be pumped or mucked into 55-gallon steel drums or large containers (roll-off bins). Samples will be taken from a minimum of one of every five drums and analyzed for landfill disposal requirements. If sludge is placed in roll-off bins, at least every other bin will be sampled.

If the sludge is not viscous and contains few solids, a continuous sample will be collected using a drum or tank tube sampler (such as a drum thief, coliwasas, or pinpointer type sampler). A barrel-type sampler with a transparent plastic inner tube will be used to collect a continuous sample if the sludge is viscous or solid. The sampler will be pulled out of the drum, and the sludge will be inspected to determine if layering is present. If so, a sample will be collected from each distinct layer.

Grab samples may also be collected if the sludge in drums is homogenous or a continuous sample cannot be obtained. The sludge will be sampled by initially cutting 4 to 6 inches into the material with a decontaminated trowel or stainless steel spoon. A stainless steel spoon will be used to scrape off the surface, collect the sample, and place it in a container.

4.3 Sampling Tanks with Unknown Contents

Remaining liquid and sludge in tanks with unknown contents will be sampled to determine the following:

- Health and safety requirements for the removal activity

- Presence of RCRA-regulated compounds
- Composition of tank contents for determination of disposal requirements

Sampling of tanks with unknown contents will be performed under the immediate supervision of the Site Safety and Health Officer. The tank removal activity and disposal of the contents will be planned after review of the sampling data.

4.3.1 Sampling Product and/or Liquids in Tanks with Unknown Contents

The top of the tank will be accessed through a manway, vent line, fill line, or other opening to sample product and/or liquids where the composition of the material is unknown. A bar or dipstick will be used to estimate the depth and thickness of the material. A phase indicator or water-mark paste may also be used to estimate the depth and thickness of product and liquids in the tank. A continuous sample will then be obtained using a drum or tank tube sampler. If a continuous sample cannot be obtained, the product and/or liquid will be sampled at the top, middle, and bottom of the tank using a pinpoint sampler.

The continuous sample will be pulled from the tank and inspected to determine if layering or phase separation is present in the tube. If so, a sample will be collected from each distinct layer and analyzed separately. If access is available at more than one location on the top of the tank, two or three samples may be collected (each end of the tank and in the middle). Samples of each distinct layer will be composited in the field or by the laboratory.

4.3.2 Sampling Sludges in Tanks with Unknown Contents

The top of the tank will be accessed through a manway, vent line, fill line, or opening to sample sludges when the composition of the material is unknown. A bar or dipstick will be used to estimate depth and thickness of the sludge. If the sludge is not viscous and contains few solids, a sample may be collected along with the liquid or product sample as described in the previous section and later separated.

A barrel-type sampler with a transparent plastic inner tube will be used to collect a continuous sample of the sludge if the material is viscous or contains solids. The continuous sampler will be pulled out of the tank and checked to determine if layering is present in the tube. A sample will be collected from each distinct layer. If access is available through more than one location on the top of the tank, two to three samples will be collected (i.e., each end and in the middle). Each distinct layer will be composited in the field or by the laboratory into a single sample. If a

continuous sample cannot be obtained, a grab sample will be collected at the top of the sludge after first removing the upper 6 to 12 inches of material.

5.0 REFERENCES

American Society of Testing and Materials (ASTM). 2001. Standard Guide for Sampling of Drums and Similar Containers by Field Personnel. ASTM D 6063-96. (Reapproved 2001)

Basic Remediation Company (BRC) and MWH. 2005. BRC Health and Safety Plan, BMI Common Areas, Clark County, Nevada. October.

BASIC REMEDIATION COMPANY
STANDARD OPERATING PROCEDURES
BMI COMMON AREAS
CLARK COUNTY, NEVADA

SOP-37

ACTIVE SOIL GAS INVESTIGATION

STANDARD OPERATING PROCEDURES

SOP-37
ACTIVE SOIL GAS INVESTIGATION

TABLE OF CONTENTS

Section **Page**

1.0 INTRODUCTION 1

2.0 RESPONSIBILITIES 1

3.0 METHODS 2
- 3.1 Planning and Preparation 2
  - 3.1.1 Sample Collection Methods 2
- 3.2 Survey Design 5
- 3.3 Sample Collection 6
- 3.4 Laboratory Analysis 7
  - 3.4.1 Quality Control Requirements 7
- 3.5 Quality Assurance Split Samples 14
- 3.6 Soil Vapor Monitoring Well/Vertical Profiling 14

4.0 REFERENCES 16

DISCLAIMER

THE FOLLOWING STANDARD OPERATING PROCEDURE PROVIDES GENERAL GUIDANCE FOR BRC CONTRACTORS FOR TECHNICAL ISSUES ADDRESSED DURING ENVIRONMENTAL SITE INVESTIGATION AND REMEDIATION ACTIVITIES. IT IS NOTED, HOWEVER, THAT EACH SITE IS UNIQUE AND THESE GUIDELINES ARE NOT A SUBSTITUTE FOR COMMON SENSE AND GOOD MANAGEMENT PRACTICES BASED ON PROFESSIONAL TRAINING AND EXPERIENCE. IN ADDITION, INDIVIDUAL CONTRACT TERMS MAY AFFECT THE IMPLEMENTATION OF THIS STANDARD OPERATING PROCEDURE. BRC CONTRACTORS RESERVE THE UNRESTRICTED RIGHT TO CHANGE, MODIFY OR NOT APPLY THESE GUIDELINES IN THEIR SOLE, COMPLETE, AND UNRESTRICTED DISCRETION TO MEET CERTAIN CIRCUMSTANCES, CONTRACTUAL REQUIREMENTS, SITE CONDITIONS, OR JOB REQUIREMENTS.

1.0 INTRODUCTION

The purpose of this Standard Operating Procedure (SOP) is to provide the user with the basic theory and methods to perform soil gas investigations. It's is intended to serve as a guide and does not recommend a standard practice. Site-specific procedures should be developed in the work plan phase, based on site conditions and project objectives.

Soil gas investigations monitor the soil atmosphere within the vadose zone to directly measure characteristics that can be indicators of processes occurring in the subsurface. Soil gas investigation is used as a method to determine the presence, composition, and origin of potential contaminants in and below the vadose zone. Soil gas investigations can provide useful information in a variety of applications such as the following:

- Horizontal and vertical delineation of surficial discharges and/or contaminant spills of volatile compounds
- Potential releases from underground storage tanks
- Landfill gas characterization and migration delineation
- Delineation of volatile organic compounds (VOCs) in groundwater at the water table
- Evaluation of the degree of microbial activity as it pertains to natural degradation of contaminants
- As an aid in soil vapor extraction (SVE) system design and effectiveness evaluation
- As a basis for locating a permanent monitoring well array

Soil gas as it exists in the subsurface is a dynamic equilibrium of the processes of partitioning, migration, emplacement and degradation. Partitioning controls movement from one physical phase to another. The five physical phases are liquid, free vapor, trapped vapor, solute, and sorbed. Migration refers to movement over distance, horizontal or vertical. Emplacement refers to establishment of residence within a particular physical phase. Degradation is the breakdown of compounds, typically, by oxidation or reduction reactions.

2.0 RESPONSIBILITIES

The **Project Manager** or **Task Leader** (a qualified Nevada Certified Environmental Manager [C.E.M.]) selects the site-specific sampling methods, with input from the Field Team Leader, Site Geologist, and Site Chemist, and oversees activities and work progress.

The **Site Geologist** (a qualified Nevada C.E.M.) selects the site-specific sampling options and helps prepare technical provisions for fieldwork.

The **Field Team Leader** (a qualified Nevada C.E.M.) implements the selected sampling program and assists in the selection of sampling methods.

The **Site Chemist** assists with the selection of sample collection techniques and analytical protocols; assures that the laboratory adheres to analytical program requirements; and reviews data for compliance with data quality objectives and contract compliance.

3.0 METHODS

Soil gas monitoring has a set of procedures that must be followed in order to provide data quality and usefulness. This section describes the following six primary procedures that are common to all soil gas monitoring techniques:

- Planning and preparation
- Soil gas sample collection
- Handling and transport of samples
- Sample analysis
- Interpretation of analytical results
- Report preparation

3.1 Planning and Preparation

The planning and preparation step includes development of project objectives, including purpose of the survey data application, and data quality objectives. This step includes gathering of historical information regarding the project area and selection of appropriate sample collection methods and survey design. Budgetary constraints must be considered during the planning step.

3.1.1 Sample Collection Methods

Soil gas sample collection methods should be selected based on site-specific factors and project objectives. The following basic sampling systems are based on the collection of soil gas by a whole-air or sorbent method in an active or passive approach:

- Whole-air methods sample the atmosphere as a mixture of gases including contaminant (target) and non-contaminant (non-target) vapors.

- Sorbent methods sample contaminants adsorbed onto a collection medium exposed to a whole-air sample stream.
- Active methods obtain a soil gas sample by positioning a device in the subsurface and withdrawal of the soil atmosphere.
- Passive methods obtain a soil gas sample by placing the collection device in the soil or on the soil surface and allowing the device to come into equilibrium with the soil atmosphere.

The active whole-air method is the most common method used during site investigation. The process begins by penetrating the soil surface to the desired sample collection depth. For depths of less than 5 feet, a simple "slam-bar" may be used to create a small diameter hole (generally less than 1 inch). The slam-bar rod is withdrawn and a hollow cylindrical probe fitted with a retractable point is inserted. The point prevents soil from plugging the probe during insertion. The probe is withdrawn slightly to allow the point to drop and expose the inlet. Care should be exercised to ensure that the probe is sealed at the ground surface to prevent ambient air from being drawn into the sample interval. A vacuum pump is then attached to the sample port and the probe is purged of one volume. Determining the volume of the probe and the flow rate of the pump allows calculation of the purge duration. Example:

Probe volume = 193 cc

Pump flow rate = 100 cc/min

$$\text{Time} = \frac{193\ \text{cc}}{100\ \text{cc/min}} = 1.93\ \text{min or } 1\ \text{min } 56\ \text{sec}$$

At the completion of the purge duration, sample collection should begin immediately. Sample collection duration is dependent on the sample container or collection media. Sample container requirements are included in the *BRC Quality Assurance Project Plan* (QAPP; BRC and ERM 2008).

Deeper soil gas sample collection can be accomplished using hydraulic push or conventional drill rigs. As an example, use a Geoprobe® to drive a rod to the desired depth. The Geoprobe® rod is fitted with an expendable tip. Retracting the rod back slightly opens the tip. The rods are purged and a sample collected in a similar manner as discussed for shallow soil gas sample collection.

The sample collection device or container is dependent on the target compound(s) and the method of analysis. For VOC screening, the device could be a photoionization detector (PID) for total VOCs or compound specific detector tubes. For quantitative VOC results using gas

chromatograph (GC) analysis sample containers such as Summa canisters, Tedlar bags, glass syringes, glass bulbs, or charcoal tubes can be used. Other soil gases such as methane, carbon dioxide, oxygen, sulfur dioxide, cyanide, etc. can also be qualitatively or quantitatively monitored depending on analytical method selected in the planning stage.

The handling and transport of soil gas samples is highly dependent on the type of sample container and analytical method. The period of sample handling and transport represents the greatest opportunity for loss or gain of contaminants to or from sample containers. In general, the time between sample collection and analysis should be minimized. Samples should be protected from light and heat and caution should be exercised to prevent sample container leakage. In situations where a portable analyzer is used, the whole-air active sampling system can be coupled directly to the analyzer, effectively eliminating the handling and transport phase.

When shipping samples for off-site analysis, factors such as container type and sample life must be considered. It is not recommended to use overnight air freight when using syringes, glass bulbs, or Tedlar bags due to the compression/decompression changes during flight.

Soil gas analysis procedures are based on protocols established for the analysis of contaminants in ambient air. Analytical procedures are dependent on the project specific compounds of concern. Decisions on analytical procedures and methods are made during the planning phase based on the purpose of the soil gas survey, budgetary restraints, and data quality objectives.

Soil gas data interpretation involves the examination of raw data and the selection of appropriate and useful displays. Interpretation of soil gas data cannot be correlated to underlying soil, rock, and groundwater contaminant concentrations at a high confidence level. However, the detection of contaminants in soil gas does suggest the existence of a contaminant source and increases in contaminant concentrations can indicate close proximity to a potential source. The interpreter should use sound judgement when examining soil gas data as they relate in context with other site characteristics.

Reporting of soil gas investigation results should be presented in a format that meets the requirements of the end user. The results must meet the project objectives developed during the planning phase. The report should include a description of the purpose of the investigation and rationale for the selection of the particular monitoring technique employed. The selected technique should be based on the physical properties of the vadose zone and the physical and chemical properties of the compounds of interest. A discussion on the vadose zone properties as they relate to survey design should be included. Regional and local hydrogeologic conditions

within the survey area should be described. Local conditions with regard to soil type(s), moisture content, groundwater flow directions, aquifer characteristics, groundwater quality, etc. should be included. A detailed site drawing showing physical structures, sample point locations, paved areas, buried utilities, suspected source areas, etc. should be presented. Isoconcentration maps and cross-sections with concentration profiles showing changes with depth are highly useful displays. Lastly, conclusions drawn from the results of the study and any appropriate recommendations should be presented.

The Work Plan should include, but is not limited to, the following topics: survey design, sample collection procedures, laboratory analysis of the soil gas samples, analytical data reporting and quality assurance/quality control (QA/QC) data requirements.

3.2 Survey Design

A scaled facility map depicting potential sources and proposed sampling points should be prepared. The locations and coordinates of identifiable geographic landmarks (e.g., street center-line, benchmark, street intersections, wells, north arrow, and property lines) should be included on the map.

The spacing of samples is dependent on the objectives of the survey and the soil conditions present. In some cases, a 200-ft horizontal spacing may be adequate for screening a large area, of permeable soils, with a low permeability cover. In areas of low permeability soils, with high moisture content a very tight spacing (e.g., 20 ft) may not be adequate to detect a hot spot.

Non-specific portable organic vapor analyzers (OVAs) or PIDs and/or GC-based hand-held detectors typically are not sufficiently sensitive for most survey purposes. Use of an on-site mobile laboratory with laboratory-grade certifiable instrumentation and procedures for real-time analysis of individual VOCs provides the detection limits and reliability needed for most surveys.

Maintain flexibility in the sampling plan such that field modifications (grid pattern density, location, and depth) can be made as real-time evaluation of analytical test results occurs. Include in the work plan decision-making criteria for these adjustments and explain decisions in the report.

Re-sample at any sampling point if anomalous data (i.e., 2 to 3 orders of magnitude difference from surrounding samples) are obtained.

3.3 Sample Collection

Obtain samples at an adequate depth (nominally 5 feet) below ground surface (bgs) to minimize potential dilution by ambient air. Conduct a site-specific purge volume versus contaminant concentration test at a location with known VOCs in soil gas. In an area with unknown conditions, conduct this test at the first location where VOCs are detected or in the area of suspected VOC contamination. Adjust the purge rate and time to achieve the optimal purge rates and volume. Describe specific method and equipment to determine optimal purge rates and volumes in the Work Plan. Avoid application of high vacuum and flow rates to sampling trains to decrease the chances of leakage. Calibrate flow rate to less than or equal to 200 milliliters per minute. In general, minimize purging to ensure samples are representative of VOCs concentrations at the probe tip. Optimum purge volume may be compound specific. “Lighter” (higher volatility) early eluting VOCs, such as vinyl chloride, may reach their highest concentration with less purging than “heavier” (less volatile) late eluting VOCs, such as tetrachloroethylene (PCE). Therefore, optimize the purge volume for the compound(s) of greatest interest.

Explain the expected zone of influence for sample points, taking into consideration soil types, land cover, drive point construction, and sample purge rate/time/volume in the Work Plan. The vertical zone of influence for purging and sampling must not intersect the ground surface. Soil gas sample collection and handling procedures should be specified in the Work Plan. Provide the procedures to prevent collection of samples under partial vacuum and the methods to minimize equipment cross-contamination between sampling points.

Avoid making a pilot hole (e.g., using a slam bar) prior to inserting the probe rod, except to drill through concrete or asphalt. The process of making a pilot hole may promote vapor contaminant aeration and result in biased low sample concentrations.

The Work Plan should specify the sampling equipment (e.g., gas tight syringe, sorbent trap) that will not compromise the integrity of the samples. Assure that the probe tip, probe, and probe connections have the same diameter to provide a good seal between the formation and the sampling assembly. If space develops between the probe and the formation, seal (e.g., with bentonite) the area around the probe at the surface to minimize the potential for ambient air intrusion.

Some sampling systems (e.g., Geoprobe) use the probe rod as a conduit for the tubing that connects to the probe tip. Assure a tight fit between the tubing and the probe tip to minimize

potential leakage and dilution of the sample. Follow the sampling method specified in the Work Plan.

3.4 Laboratory Analysis

The project Work Plan should specify the target analyte list. The target analyte list should be determined based on site history and conditions. A method detection limit (MDL) study should be performed for each target analyte at least annually. The MDLs should be confirmed prior to analysis. Practical quantitation limits (PQLs) should be provided for each analyte based on the laboratory instrument's ability to achieve reasonable limits. Action goals or limits should be determined in the Work Plan based on site history and contaminants of concern. Contract required quantitation limits (CRQLs) are then established based on all of the information provided above.

The following detectors are used for soil gas analysis:

- Electrolytic conductivity detector (ELCD) (e.g., Hall)
- PID (Note: see SOP-39 for additional information on PID principles and procedures.)
- Flame ionization detector (FID)
- Mass spectrometer (MS)
- Electron capture detector (ECD)

The detectors chosen will depend on the target analytes and goals of the project.

3.4.1 Quality Control Requirements

The following section describes the minimum requirements for QC for the analysis of soil gas samples that are analyzed by GC. All standards and QC samples must be clearly identified and documentation maintained to trace them to their original source.

3.4.1.1 Calibration Requirements

The GC must be equipped with a type of column that can separate all of the target compounds. Coelution of the target analytes is not acceptable unless the compounds are distinguished and quantified by two different types of detectors in use at that time. Analyze the initial calibration and daily mid-point calibration check standards, laboratory control samples (LCS), method blank, and samples using the same GC conditions (i.e., detector and temperature program). Use a

GC analytical run time sufficient to identify and quantify all of the target analytes. The analytical run sequence requirements are provided below.

Perform an initial calibration for all target analytes. An initial calibration should be performed when: when the GC column is changed, when the GC operating conditions have changed, or when the daily midpoint calibration check standard does not meet the specified criteria.

The calibration should include at least three different concentrations of the target analytes, with the lowest standard not exceeding five times the CRQL for each compound. Calculate the response factor (RF) for each compound and calibration concentration prior to analyzing any field samples. Calculate the average RF for each compound. The percent relative standard deviation (%RSD) for each target analyte must not exceed 20% except for the following compounds which must not exceed 30%:

- Trichlorofluoromethane (Freon 11)
- Dichlorodifluoromethane (Freon 12)
- Trichlorotrifluoromethane (Freon 113)
- Chloroethane
- Vinyl chloride

Verify the true concentration of the standard solutions used with the LCS after each initial calibration. Conduct the verification using a LCS mid-point concentration within the initial calibration range. The LCS must include all the target compounds and the RF must be within 15% difference from the initial calibration.

The calibration must be verified using the calibration standard solution with a mid-point concentration within the linear range of the initial calibration before any samples are analyzed. The daily mid-point must contain all the target analytes. Assure that the RF of each compound (except for trichlorofluoromethane (Freon 11), dichlorodifluoromethane (Freon 12), trichloro-trifluoromethane (Freon 113), chloroethane, vinyl chloride) is with 85% to 115% of the average RF from the initial calibration. The RFs for trichlorofluoromethane (Freon 11), dichlorodifluoromethane (Freon 12), trichlorotrifluoromethane (Freon 113), chloroethane, vinyl chloride must be within 75% to 125%.

3.4.1.2 Quality Control Samples

LCSs are prepared using a second source standard that is totally independent from the standards used for the initial calibration. Second source means a different supplier (whenever possible) or a different lot from the supplier.

Field blank samples are used to detect possible interferences from ambient air. Investigate and determine the source(s) and resolve laboratory contamination problem prior to analyzing samples, if the blank indicates measurable concentrations above the CRQL of the target analyte(s).

Add surrogate compounds (if used) to all calibration and daily mid-point check standards, blanks, site samples, and samples for second column confirmation to monitor the relative retention time (RRT) shift between GC runs. This is recommended for better compound identification when ELCD, PID, ECD, and FID are used for analysis. Two to three different surrogate compounds should be used to cover the different temperature programming range for each GC run.

Assure that the surrogate compound concentration is within the initial calibration range. Use a surrogate for both primary analysis and second column confirmation. Second column confirmation can be done with a different GC. The representative sample can be collected in Tedlar bag and confirmation can be done off site. Second column confirmation may not necessary if the compounds present have been confirmed from previous soil gas investigations.

3.4.1.3 Quantitation

Assure that the requirements for initial calibration, daily mid-point, blank, and LCS are met before any field samples are analyzed. Analyze samples within 30 minutes after collection to minimize VOCs loss. Longer holding times may be allowed if the laboratory uses special sampling equipment (e.g., sorbent trap, glass bulb) and demonstrates that the holding time can exceed 30 minutes with no decrease in results.

Assure that concentrations of constituent(s) in the sample do not exceed 50% of the highest concentration in the calibration range. Reanalyze the sample using a smaller volume or dilution if the detected concentration exceeds 50 percent of the highest concentration in the calibration range.

Attain detection limit of not more than 1 microgram per liter (µg/L) for all target compounds. If lesser sample volumes or dilutions are used to off-set possible high concentration of constituents in the initial run, use the initial run to calculate the results for constituents that are not affected by the high concentration so that detection limit of 1 µg/L for these compounds can be achieved. Quantify sample results using the average RF from the most recent initial calibration. Add surrogate compounds to all samples if GC/MS is not used for analysis or compound confirmation. Conduct compound confirmation by GC/MS or surrogate compounds and second column. Identify VOCs through mass spectrum and retention time comparison if MS is used for analysis.

Detection limits may be raised above 1 µg/L for compounds with high results (i.e., the limit as specified in the Work Plan) and those closely eluting compounds for which quantitation may be interfered by the high concentrations. Quantify sample results according to this SOP for analytes that are not affected by the high concentration compounds.

When dilution with ambient air is used for samples with high results, dilute and analyze in duplicate at least one sample each day to verify the dilution procedure. Ambient air should be checked periodically during each day of analysis.

Shorten the GC run time under the following conditions only:

- The number and identification of compounds are known from previous soil and soil gas investigations.
- The consultant has been given permission by the regulatory agency to analyze only for specific compounds.

Meet the following requirements when shortening GC run-time:

- Client and chemistry staff must approve the shortened run time.
- The compounds must not coelute.
- Perform initial calibration and daily mid-point calibration check and analyze LCS and samples under the same conditions as the shorter GC run-time.
- Quantitate using the average RF from the initial calibration utilizing the shorter run-time.
- Perform a normal run-time analysis whenever peaks are detected within retention time windows where coelution, as indicated by the calibration chromatograms, is likely.

Analyze an LCS as the last GC run of the day. Include the same compounds used in the daily mid-point calibration check analysis, as listed in Section 4.3.1.1. Attain RF for each compound

within 80% to 120% of the average RF from the initial calibration. If the RF is not within these limits, all test results generated from the same day will be considered questionable and may be rejected by the project chemist.

Analyze an LCS at the detection limit concentration instead of the mid-point concentration if all samples from same day of analysis show non-detect (ND) results. The recovery for each compound must be at least 50%. If it is less than 50%, all the ND results of the samples become questionable.

Analyze on-site the evaluation check sample as part of the QA/QC procedures when presented with such a check sample by chemistry staff. Provide preliminary results on-site.

If the results show that the soil gas analyzer has problems with analysis, all the results generated during the same day may be rejected. Correct all problems before any more samples are analyzed.

Unannounced, on-site inspection by project chemist is routine. Provide upon request hard copies of the complete laboratory data, including raw data for initial calibration, daily mid-point check, LCS and blank results. Failure to allow such inspection or to present these records or field data may result in rejection of all sample results. The soil gas analyzer must understand the instruments, analytical and QA/QC procedures and must be capable of responding to reasonable inquiries.

Maintain the following records in the mobile laboratory:

- A hard copy record of calibration standards and LCS with the following information:
  - Date of receipt
  - Name of supplier
  - Lot number
  - Date of preparation for intermediate standards (dilution from the stock or concentrated solution from supplier)
  - ID number or other identification data
  - Name of person who performed the dilution
  - Volume of concentrated solution taken for dilution
  - Final volume after dilution
  - Calculated concentration after dilution
- A hard copy of each initial calibration for each instrument used for the past few months
- The laboratory SOPs

Report all sample test results and QA/QC data using the reporting formats in the project work plan. Compounds may be listed by retention time or in alphabetical order. Include in the table of sample results all compounds in the analyte list. Report unidentified or tentatively identified peaks. Submit upon request all data in electronic format and raw data, including the chromatograms. Identify the source(s) of the contaminants detected in the investigation, as indicated by the data.

3.4.1.4 Analytical Data Reporting

Report the following for all calibration standards, LCS and environmental samples:

- Site name
- Laboratory name
- Date of analysis
- Name of analyst
- Instrument identification
- Normal injection volume
- Injection time
- Any special analytical conditions/remark

Provide additional information, as specified, for different types of analyses. Tabulate and present in a clear legible format all information according to the following groupings:

- Initial calibration
  - Source of standard
  - Detector for quantitation
  - Retention time
  - Standard mass of concentration
  - Peak area
  - Response factor (RF)
  - Average response factor (RF_{ave})
  - Standard deviation (Sd_{n-1}) of RF
  - Percent relative standard deviation (% RSD), i.e., (SD_{n-1})/RF_{ave}) x 100 (%)
  - Acceptable range of %RSD

- Daily calibration check sample
  - Source of standard
  - Detector
  - Retention time
  - Standard mass or concentration
  - Peak area
  - Response factor (RF)
  - percent difference between RF and Rf_{ave} from initial calibration (%DIFF)
  - Acceptable range of %DIFF

- LCS. Same format as daily calibration

- Environmental sample
  - Sample identification
  - Sampling depth
  - Purge volume
  - Vacuum pressure
  - Sampling time
  - Injection time
  - Injection volume
  - Dilution factor (or concentration factor if trap is used)
  - Detector for quantitation
  - Retention time
  - Peak area
  - Concentration in µg/L
  - Sample temperature and pressure (if gas sample is collected)
  - Total number of peaks found by each detector
  - Unidentified peaks and/or other analytical remarks

- Surrogate and second column confirmation
  - Mark retention time and compound name on:
    - second column chromatogram of standard
    - second column chromatogram of confirmation sample

Discuss the method(s) to be used for data interpolation (contouring). Provide isoconcentration maps for each VOC detected, total chlorinated VOCs, total aromatic hydrocarbons, and petroleum-based hydrocarbons for each sampling depth, as applicable. Provide cross-section(s) depicting the geology and changes in contaminant concentration with depth, as justified by the data.

3.5 Quality Assurance Split Samples

Discuss soil boring locations with project staff. Locate borings and sampling depths based upon all available information including soil gas survey test results. Conduct QA according to the local regulatory agency's standards, if any.

3.6 Soil Vapor Monitoring Well/Vertical Profiling

Depending on the objectives of the survey, soil vapor monitoring wells may be installed in areas where significant VOC concentrations were identified during a soil vapor investigation. The objectives of vertical profiling typically are to: 1) assess the vertical distribution of VOCs in the vapor phase within the unsaturated zone, 2) determine the spatial pattern of vapor phase soil contamination at different depths within the unsaturated zone, 3) identify migration pathways at depth along which VOCs may have migrated from sources, and 4) serve as discrete monitoring points to evaluate the efficiency of a cleanup action or some other long term monitoring. Soil vapor monitoring wells offer the opportunity to resample as many times as necessary to monitor soil vapor changes over time.

Install nested, cluster, and/or multi-port vapor monitoring wells to obtain discrete multi-depth soil vapor data in the unsaturated zone. Provide a schematic diagram of the well design and a cross-section of the site showing the major lithologic units and zones for vapor monitoring.

Collect undisturbed soil samples if fine-grained soils are encountered during drilling of the boring for the probes. Due to air-stripping effect, VOC analysis of soil sample is not acceptable if air drilling method is used.

Use available information (e.g., geologic log, organic vapor concentration reading) to select appropriate depths for vapor monitoring. Install probes at depths with elevated vapor readings (headspace) and/or slightly above fine-grained soils which can retard the migration of VOCs. The deepest probe should be considered for installation above the capillary fringe.

Consider installing nested vapor probes in the annular space of the groundwater monitoring well to serve as a dual-purpose well if both vapor and groundwater monitoring are required. This design saves costs by installing vapor and groundwater monitoring wells in a single borehole.

Use small diameter (e.g., ≤1/4-inch) continuous tubing attached from the vapor probe to the ground surface to minimize purge volume.

Design and construction of the vapor wells should consider the objectives of the wells. For example, those to serve as long-term monitoring points to evaluate the efficiency of a cleanup action and soil vapor changes over time should have the surface protection to maintain their integrity through time. Protect the tubing from being damaged or clogged by subsurface soil materials especially in deep installations (e.g., placing inside a polyvinyl chloride [PVC] casing) or consider using 1/2-inch PVC pipe in place of the tubing. If tubing is used, consider attaching a weight at the probe tip and/or attaching the tubing onto a supporting pipe or rod to ensure that the probe tip remains in-place during installation.

Properly cap the top end of each tubing/pipe (e.g., control valve) and label each tubing/pipe with the correct sampling depth.

Attach the bottom-end of the tubing to an appropriate vapor probe (e.g., PVC screen, stainless steel wire screen, stainless steel probe, or brass elbow, etc.). Ensure that the connection between the tubing and the vapor probe is tight to prevent leakage.

Place the filter pack (e.g., sand or pea gravel) around each vapor probe and isolate each monitoring zone with bentonite seals. Use an appropriate method (e.g., tremie method) to avoid bridging or segregation during placement of the filter packs and bentonite seals.

Extend the filter pack to a sufficient distance above the probe to allow for settling of backfill materials. In general, the filter pack should not exceed 3 feet in thickness. In deep borings, the filter pack should extend about 4 feet above the probe to allow for settling of backfill materials and to reduce the potential for the bentonite seal settling around the probe.

Consider placing fine sand above the filter pack to prevent the bentonite seal from entering the filter pack. Place a minimum of 2 feet thick bentonite seal above and below the filter pack. Allow sufficient time (e.g., 1/2 to 1 hour) for bentonite seal to properly hydrate before placing filter pack or cement-based sealing materials. Prevent infiltration of surface runoff and unauthorized access (e.g., use a locking subsurface utility vault).

Specify the schedule for sampling the vapor probes. In general, soil vapor monitoring is required a minimum of 1 and 2 months after installation. If VOC stripping by air drilling methods is of concern, soil vapor monitoring should be delayed by up to two to four months following well completion to allow vapor concentrations to stabilize. The regulatory agency may require a different sampling schedule and additional sampling based upon site conditions and test results.

Specify the procedures to properly decommission vapor wells that are no longer needed. The decommissioning activity should achieve an effective and long-term seal of subsurface geologic materials and prevent cross contamination in the subsurface.

4.0 REFERENCES

Basic Remediation Company (BRC) and Environmental Resources Management (ERM). 2008. BRC Quality Assurance Project Plan. BMI Common Areas, Clark County, Nevada. April.

BASIC REMEDIATION COMPANY
STANDARD OPERATING PROCEDURES
BMI COMMON AREAS
CLARK COUNTY, NEVADA

SOP-38

RADIATION FIELD SCREENING

STANDARD OPERATING PROCEDURES

SOP-38
RADIATION FIELD SCREENING

TABLE OF CONTENTS

Section **Page**

1.0 INTRODUCTION 1

2.0 DEFINITIONS 1

3.0 RESPONSIBILITIES 1

4.0 GUIDELINES 2
- 4.1 Applicability 2
- 4.2 Radiation Field Screening 3
- 4.3 Ludlum Model 3 Radiation Survey Meter and Model 2241 Scaler/Ratemeter 3
  - 4.3.1 Operation 3
  - 4.3.2 Calibration 4
  - 4.3.3 Maintenance 5

5.0 REFERENCE 5

LIST OF ATTACHMENTS

Attachment 1 Instructional Manual and Certificate of Calibration for Ludlum Model 2241 Digital Ratemeter, December 2000

DISCLAIMER

THE FOLLOWING STANDARD OPERATING PROCEDURE PROVIDES GENERAL GUIDANCE FOR BRC CONTRACTORS FOR TECHNICAL ISSUES ADDRESSED DURING ENVIRONMENTAL SITE INVESTIGATION AND REMEDIATION ACTIVITIES. IT IS NOTED, HOWEVER, THAT EACH SITE IS UNIQUE AND THESE GUIDELINES ARE NOT A SUBSTITUTE FOR COMMON SENSE AND GOOD MANAGEMENT PRACTICES BASED ON PROFESSIONAL TRAINING AND EXPERIENCE. IN ADDITION, INDIVIDUAL CONTRACT TERMS MAY AFFECT THE IMPLEMENTATION OF THIS STANDARD OPERATING PROCEDURE. BRC CONTRACTORS RESERVE THE UNRESTRICTED RIGHT TO CHANGE, MODIFY OR NOT APPLY THESE GUIDELINES IN THEIR SOLE, COMPLETE, AND UNRESTRICTED DISCRETION TO MEET CERTAIN CIRCUMSTANCES, CONTRACTUAL REQUIREMENTS, SITE CONDITIONS, OR JOB REQUIREMENTS.

1.0 INTRODUCTION

This Standard Operating Procedure (SOP) provides basic information on operating procedures for radiation field screening equipment that is typically used in the field. Field screening instruments are used for on site, real-time measurements, evaluation of existing conditions, refinement of sampling locations, and health and safety evaluations. The objective of field screening analysis is to generate data that are generally used in refining sampling plans and in estimating the extent of contamination at the site. This type of support also provides real-time data for health and safety purposes. The purpose of this SOP is to outline the operation, calibration, and maintenance procedures for equipment used for field screening.

2.0 DEFINITIONS

None.

3.0 RESPONSIBILITIES

The following is a general description of responsibilities related to operating, calibrating, and maintenance procedures for equipment used for field screening.

The **Project Manager** or **Task Leader** (a qualified Nevada Certified Environmental Manager [C.E.M.]) is responsible for identifying the appropriate equipment necessary to adequately define the parameters.

The **Health and Safety Coordinator** will work with the Project Manager in identifying the appropriate safety equipment. The Health and Safety Coordinator will also perform audits to observe field personnel using the equipment. If the equipment is not being used properly, the Health and Safety Coordinator will provide the necessary training and resources.

The **Field Team Leader** (FTL) (a qualified Nevada C.E.M.) is responsible for including a refresher course on the proper use, calibration, and maintenance of all equipment to be used on the project as part of the kick-off meeting. The FTL will ensure on a daily basis that all field team members properly use the equipment through the duration of the project. When the equipment is owned by Basic Remediation Company (BRC) and is scheduled for or requires maintenance, these functions are conducted by qualified individuals or by sending the equipment to the manufacturer or a repair company. Before the instrument is taken into the field, it will be inspected and calibrated by the FTL to ensure that it is operating properly.

Field Team Members are responsible for renting equipment required for the project. The equipment should have proper calibration standards and certification, if required. The equipment that will be used should be shipped to the site and be inspected and calibrated in accordance with the equipment's manual prior to use at the site. For specific operation and calibration procedures see the attached manual (Attachment 1; Ludlum Model 2241 Digital Ratemeter, December 2000).

If the equipment is owned by BRC or BRC Contractor, Field Team Members are to follow the procedure listed below. Prior to mobilization, a field team member will be required to check out equipment or supplies requested for the project and sign an equipment checklist form stating that all equipment is functioning, can be calibrated, is in good condition, all the necessary parts are included in the case, and all supplies requested are present. At that time, all equipment will be calibrated, if applicable, and checked for proper use by a field team member and the FTL.

The field team members will be responsible for carefully reviewing instruction manuals for the equipment to be used on the project. All field team members will be required to sign a form indicating that they know how to properly operate each piece of equipment that will be used on their project.

This SOP provides a general description of the calibration, maintenance, and operating procedures defined in the manufacturer's instruction manual, which accompanies each piece of equipment. This SOP should be used as a general reference and the manufacturer's instruction manual should be followed at all times by field team members when using the equipment.

4.0 GUIDELINES

4.1 Applicability

These procedures apply to all work conducted for BRC, by BRC Contractors, or under the direction of BRC or its' Contractors. The information in this SOP may be incorporated into project-specific plans. Deviations or modifications to procedures not addressed in the project plans must be handled as a corrective action. For the purpose of this SOP, Ludlum Model 3 Radiation Survey Meter and Model 2241 Ratemeter/Scaler will be discussed below.

To protect the equipment, it must be kept in the proper cases, packaged properly, and/or secured during transport. If equipment is damaged during transport because it was not properly secured in its case, resulting charges will be directly applied to the job.

Equipment or supplies at job sites should never be left unsecured where they can be lost or stolen.

Any equipment failures are to be reported immediately to the FTL and returned as soon as possible for repairs. This notification ensures that proper charges/credits are documented and that a replacement is delivered to the site.

All equipment will be cleaned or decontaminated at the job site prior to returning the equipment.

4.2 Radiation Field Screening

The instruments discussed in this SOP are designed to survey levels of radiation during field screening activities. Activities may include, but are not limited to, screening the immediate work area or environment for radiation as a standard health and safety procedure, and screening investigation matrix (soil) for radiation. Reference site specific work plans or Health and Safety Plans for required procedures to determine when radiation field screening is required.

4.3 Ludlum Model 3 Radiation Survey Meter and Model 2241 Scaler/Ratemeter

Ludlum Model 3

The Ludlum Model 3 is a portable radiation survey meter. The instrument is set for 900 volt Geiger-Mueller Tube (GMT) measurement of beta and gamma radiation. The range of the meter is from 0 to 200 milliroentgen per hour (mR/hr). It is important that the operator realizes that this meter will not respond to most alpha radiation.

Ludlum Model 2241

Ludlum Model 2241 meter has a digital readout which records with automatic ranging in counts per minute (CPK) and kilo-counts per minute. It comes with a handheld Geiger-Mueller pancake probe that is used to survey surfaces such as equipment, clothing, skin, or investigation matrix for alpha, beta and gamma radiation.

4.3.1 Operation

To use the Ludlum Model 2241 meter, remove the instrument from the carrying case. Install the required “D” sized batteries by loosening the thumbscrew on the face of the meter and insert the two batteries. Ensure proper polarity, as indicated on the inside of the battery compartment

cover. After properly inserting the batteries, close the compartment and retighten the thumbscrew. Remove the red plastic protective cover from the pancake probe. Assemble the meter by attaching the handheld probe to the cable, and the cable to the meter. Switch the selector switch to "rate meter". Flip the "F/S" switch to the "F" position. Flip the "AUD" switch (audio control) to the on position. Verify the meter operation by placing the probe over the "check source" (the yellow plastic square location on the left side of the meter). Operation is verified if the meter readout displays digits and the audio output chirps at a high frequency. Proceed with meter calibration. For additional details refer to the attached manual for the Ludlum Model 2241 meter.

To use the Ludlum Model 3 meter, first remove the meter from the protective carrying case. Place the multifunction switch in the "BAT" position and note the meter's reading. Then place the multifunction switch in the "X0.1" position, the F/S switch in the "S" position, and the "AUDIO" switch in the "ON" position. Note that an audible clicking sound can be heard while the meter is counting. After a few seconds, press the "RES" button and note that the meter returns to zero.

4.3.2 Calibration

The Ludlum Model 2241 calibration routine consists of entering detector parameters into memory via the switch board and adjusting the "CAL" controls ("HV," "DISC". and "OVL") for the specific detector operating requirements. Reference Section 5.4 in the attached Ludlum Model 2241 Instructional Manual for additional calibration details.

The Ludlum Model 3 calibration routine consists of first turning the meter on and reading and recording the background radiation level. Place the GMT probe flat against the casing of a certified Sr90 standard, or the recommended standard per the manufacturers manual. Then adjust the multifunction switch until the meter reading remains on scale. Then read and record the meter's response. Calculate the detector's efficiency as follows: E = Meter Reading – Background/Activity. Check to ensure that the calculated efficiency is within +/- 0.1 of the efficiency rating placarded on the meter. Then, set the multifunction switch to "X0.1" before entering the site.

Calibration events will be documented in a logbook. Documentation will include the date inspected, person responsible for calibrating the instrument, the instrument number, calibration results, calibration standard information (source, type, certified calibration standard).

4.3.3 Maintenance

Both the Ludlum Model 2241 and Model 3 maintenance consists of keeping the instruments clean and periodically checking the batteries and calibration. An instrument operational check should be performed prior to each use by exposing the detector to a known source and confirming the proper reading on each scale. Re-calibration should be accomplished after any maintenance or adjustment to the detector. Ludlum Measurements recommends re-calibrating at an interval no greater than one year. For the purpose of individual investigations, the detectors should be calibrated at the start of each field program at a minimum.

5.0 REFERENCE

Ludlum Measurement, Inc., 2000. Ludlum Model 2241 Digital Ratemeter, Ludlum Measurements, Inc., 501 Oak St., P.O. Box 810, Sweetwater, TX 79556, December 2000, SN 170658 and Succeeding Serial Numbers.

ATTACHMENT 1

INSTRUCTIONAL MANUAL AND CERTIFICATE OF CALIBRATION FOR LUDLUM MODEL 2241 DIGITAL RATEMETER, DECEMBER 2000

LUDLUM MODEL 2241-2

Dual Detector Digital Scaler/Ratemeter
December 2000
Serial Nos. Listed Inside*;
Serial No. 170658 and Succeeding
Serial Numbers

Measuring Range: Auto-ranging with selectable units from:
μR/hr - R/hr, μSv/h - Sv/h, cpm - kcpm, cps - kcps

Power Requirement: two standard "D" cell batteries

Firmware Number for which this Instruction Manual is valid:
Firmware# 408-06, versions 01 - 03

LUDLUM MEASUREMENTS, INC.
501 OAK ST., P.O. BOX 810
SWEETWATER, TX 79556
915/235-5494 FAX: 915/235-4672

***NOTE: This manual (December 2000) also applies to the following serial numbers:**

163609
163610
163614
163618
163620
163625
163626
163627
163628
163640
163642
163645
163651
163652
163656
166935
166938
166953
166954
167591
167592
167594
167597
167600
167601
167604
167605
167607
167609
167610
167612
168435
168436
168438
168440
168446
168448
168450
168456
168459
168461
168465
168466
169729
169737
169746

REV #	ALTERATIONS	DATE	BY
1	VALID	01/22/98	ACF

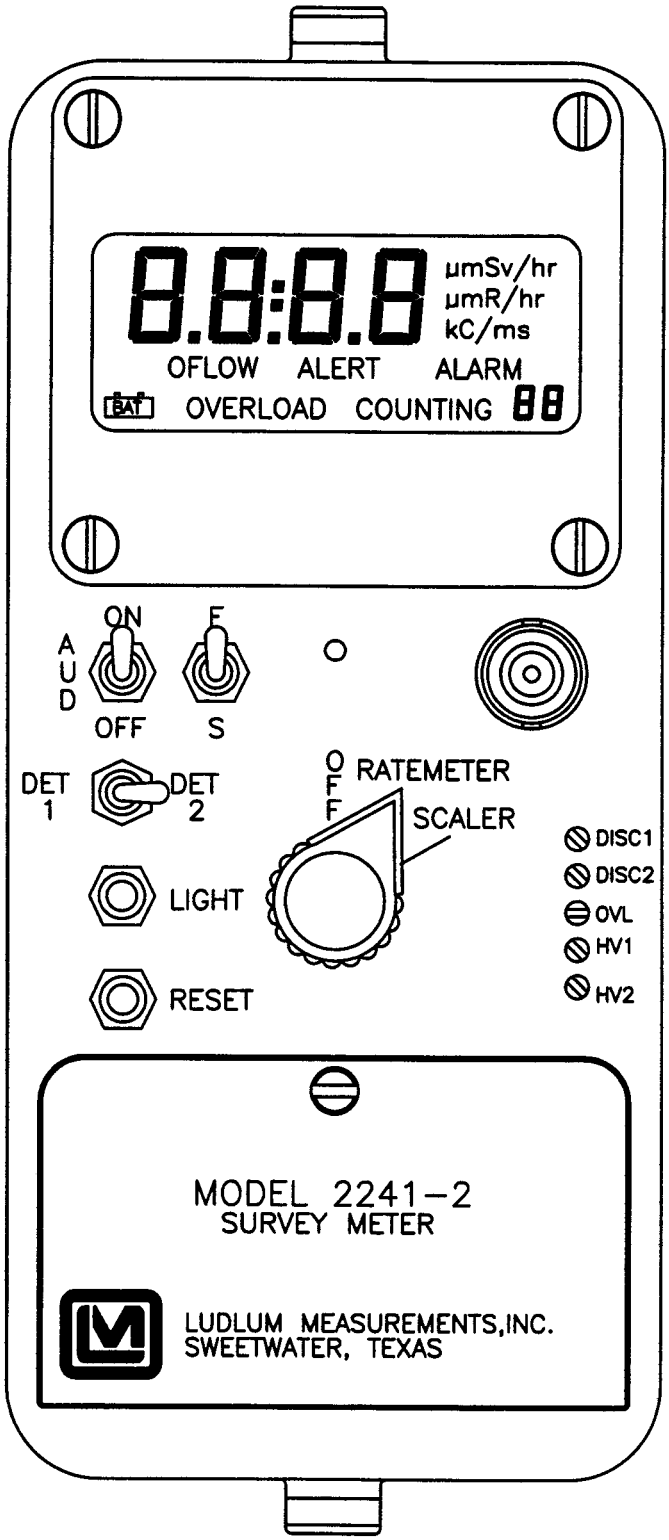

DWN	DATE	CHECKED	APPROVED
ACF	01/22/98	A.W. 1-28-98	JGW 1-22-98

TITLE: MODEL 2241-2

LUDLUM MEASUREMENTS, INC.
501 OAK STREET
SWEETWATER, TEXAS 79556

SERIES	SHEET
408	75

TABLE OF CONTENTS

1. GENERAL 1

2. SPECIFICATIONS 2

3. PRINCIPLE OF OPERATION 3

4. PRELIMINARY INSTRUCTIONS 4
4.1 Unpacking and Repacking 4

5. OPERATING INSTRUCTIONS 5
5.1 Safety Measures 5
5.2 Descriptions of Controls and Functions 5
5.2.1 Operator Controls 5
5.2.2 Main Board 7
5.2.3 Switch Board 7
5.3 Operating Procedures 11
5.4 Calibration 12
5.4.1 General Detector Setup Information 13
5.4.2 Counts/minute (C/m) Calibration 14
5.4.3 R/hr Calibration 15
5.4.4 Determining CC and DTC 15
5.4.5 Detector Overload (OVL) Calibration 21

6. THEORY OF OPERATION 22
6.1 Main Board 22
6.1.1 Detector Input/Amplifier 22
6.1.2 Discriminator 22
6.1.3 Low Voltage Supply 22
6.1.4 High Voltage Supply 22
6.1.5 Detector Overload 23
6.1.6 Microprocessor (μP) 23
6.1.7 Audio 23
6.2 Switch Board 23
6.3 Display Board 23
6.3.1 LCD drive 23
6.3.2 Backlight Drive 23

7. MAINTENANCE 24

PARTS LIST 25
Model 2241-2 Dual Detector Digital Scaler/Ratemeter 25
Main Circuit Board, Drawing 408 x 91 25
Calibration Board, Drawing 408 x 127 26
Display Board, Drawing 408 x 79 26
Switch Board, Drawing 408 x 45 27
Chassis Wiring Diagram, Drawing 408 x 131 27

DRAWINGS AND DIAGRAMS 28

1. GENERAL

The Model 2241-2 is a portable microprocessor-based digital Scaler/ Ratemeter designed for use with scintillation, Geiger-Mueller (G-M), and proportional-type detectors for measurement of ionizing radiation. The data is presented on a 4-digit (6 digits in the Scaler mode) Liquid Crystal Display (LCD) with moving decimal point. A 3-position switch labeled "OFF/ RATEMETER/SCALER" selects the desired operating mode for the instrument.

A locking toggle switch labeled "DET 1" and "DET 2" allows for a quick change of operating parameters between detectors. The pull-and-change toggle switch protects against inadvertent changes. When "DET 1" is selected, Detector 1 parameters for high voltage (HV1), discrimination level (DISC1), and those set by the microprocessor for Detector 1 are selected. Likewise, when "DET 2" is selected, the switch toggles to HV2, DISC2, and the microprocessor-set parameters for Detector 2.

Programmable display units ("RATEMETER" mode only) are represented in R/hr, Sv/h, cpm, or cps with multipliers of micro (μ) or milli (m) for R/hr and Sv/h and kilo (k) for cpm or cps. The display units are auto-ranging, enabling the readout to display a broad range of radiation levels.

The Model 2241-2 incorporates independent adjustable alarms for the "RATEMETER" and "SCALER" operating modes. The "RATEMETER" mode has 2 alarm indications. The first-level alarm is indicated by the word "ALERT" on the LCD. The second-level alarm is indicated by the word "ALARM" and a continuous audible tone. The scaler alarm condition will also display the word "ALARM" and produce the same audible tone. Both of the audible alarms can be silenced (acknowledged) by depressing the "RESET" switch. All of the alarms are concurrent.

Other features include Dead Time Correction (DTC) to compensate for detector dead time; audible click-per-event with programmable 1, 10, 100, and 1000 divide-by; LCD backlight with programmable "ON" time; programmable fixed or variable response time; and count overflow visual alarm, indicating that the counting circuitry is nearing the maximum counting capability.

All of the features described above may be programmed manually using the internal switch board or by computer through the RS-232 port. Two different detector operating parameters may be stored in non-volatile memory. The switch board can be removed after entering or changing parameters to prevent tampering with the setup parameters.

A regulated high voltage power supply, dual setpoints adjustable from 200 to 2500 volts, with detector overload detection and dual adjustable discrimination levels, adds versatility to the instrument. This supports operation for a broad range of detectors and connecting cable lengths. All of the calibration controls are covered to prevent any inadvertent adjustment to the detector operating parameters.

The unit is operated with 2 "D" cell flashlight batteries. The unit body is made of cast-and-drawn aluminum with computer-beige polyurethane paint, which aids in decontamination of surfaces.

2. SPECIFICATIONS

- **POWER:** Two standard "D" size batteries; current drain approx. 35 mA (backlight off); minimum battery voltage 2.2 ± 0.1 Vdc

- **BATTERY DEPENDENCE:** Instrument calibration change less than 3% to battery endpoint

- **BATTERY LIFE:** Approximately 200 hours for alkaline batteries

- **OPERATING TEMPERATURE:** -4 to 122°F (-20 to 50°C)

- **WARM-UP TIME:** Unit may be used immediately after the LCD initialization sequence is completed: approximately 5 seconds after turn-on

- **DISPLAY:** 4-digit LCD with 0.5" (1.3cm) character height; 2 additional 0.2" (0.5cm) digits are used for the overflow counter (scaler mode) and exponential powers (parameter setup)

- **MEASURED RANGES:** Auto-ranging from 00.0 μR/hr - 999 R/hr, .000 μSv/h - 999 Sv/h, 0.00 cpm - 999 kcpm, or 0.00 cps - 999 kcps with programmable decimal point for fractional readings in the tenths or hundredths

- **DISPLAY LINEARITY:** Within ± 10% of the true value with connected detector

- **RESPONSE TIME:** Variable or fixed ratemeter response

Variable - Response time is varied in proportion to the incoming count rate; the 2-position "F/S" (Fast/Slow) toggle switch selects the maximum time constant (TC) for the variable mode – the "F" position varies the TC from 1-10 seconds, and the "S" position varies from 1-30 seconds.

Fixed Response - The fast ("F") response position is programmable from 1-199 seconds, the slow response is 5 times the fast TC. For MDA-type measurements, the fixed response time mode is recommended.

✔NOTE

The TC is defined as a one-time constant which equals 63% of the final reading. To convert to the 10-90% of final reading definition, the TC value will have to be multiplied by 2.25; the readout updates every 2 seconds, therefore response time measurements will be rounded to 2-second intervals; example: fixed TC = 2 seconds X 2.25 = 4.5 seconds for 90% of final reading – it will take 6 seconds before the display (3 each of 2-second intervals) will reach the 90% of final reading value

- **ALERT/ALARM:** Visual and audible adjustable alarm points for both the RATEMETER and SCALER modes; alert annunciator for the RATEMETER mode only. Ratemeter alert/alarm adjustable from 1μR/hr to 999 R/hr, 1μSv/h to 999 Sv/h, 1 to 999 kcpm, 1 to 999 kcps; Scaler alarm is adjustable from 1 to 999999

- **INPUT SENSITIVITY:** Adjustable from 2-100 millivolts; negative pulse response, 2 separate levels for DET 1 and DET 2

- **HIGH VOLTAGE:** Externally

adjustable from 200 to 2500 volts; 2 separate setpoints for DET 1 and DET 2; regulated within ±0.2% at 1000 Vdc; maximum load: 50μA at 1000 Vdc

- **CALIBRATION CONSTANT:** 0.001 to 280 x 10^9 counts/unit

- **DETECTOR DEAD TIME COMPENSATION (DTC):** Adjustable from 0 to 9999 microseconds

- **RS-232 PORT:** 9-pin "D" type connector with programmable baud rate from 150 to 19,200 bps

- **CONNECTOR:** Series C; BNC, MHV, and other input connectors are available upon request

- **SIZE:** 7" (16.5cm) H X 3.5" (8.9cm) W X 8.5" (21.6cm) L, including handle

- **WEIGHT:** 3.5 pounds (1.6kg), including batteries

- **FINISH:** Drawn-and-cast aluminum, with computer-beige polyurethane enamel and silk-screened nomenclature

- **Backlight "ON" Time:** 5, 15, 30, 60, 90, 120, or 240 ±1 second

3. PRINCIPLE OF OPERATION

The Model 2241-2 utilizes microprocessor-based technology, providing an extensive range of operating features. Exposure rate and count rate calibrations can be performed and saved with the appropriate G-M, proportional, and/or scintillation detector. Two independent detector parameters can be stored in memory.

The Model 2241-2 incorporates a detachable switch board which is used to program detector and operating parameters into the non-volatile memory (retains the data even after the power is removed). The switch board may be removed so that the operating parameters cannot be altered. If multiple units are to be used at one location, fewer switch boards may be purchased in order to program all of the instruments. A 16-position rotary switch ("FUNCTION") selects each of the 16 operating and detector parameters. Three pushbutton switches provide the means to change and save the variables for each of the parameters.

An RS-232 port is also available via the switch board for computer connection. Communication baud rate may be set with the "FUNCTION" switch to correspond to the computer baud. The computer can adjust the detector parameters, retrieve the real time ratemeter data, start and stop scaler counter, and retrieve the scaler data.

An LCD provides the readout for the ratemeter and scaler data with the programmed units and multipliers, "ALERT," "ALARM," "OVERLOAD," and "OVERFLOW" annunciators, "low battery" icon, and the scaler counting mode indication ("COUNTING"). The four 0.5" digits are used for the ratemeter and scaler data with the addition of the two 0.2" digits in the lower right hand corner, utilized as a 2-digit overflow counter (equivalent to a 6 digit scaler). The LCD also displays the variables during the manual programming sequence. (See figure below.)

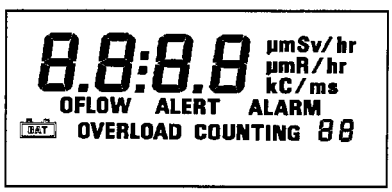

The ratemeter mode is enabled by switching to the "RATEMETER" position and reading the displayed data in the programmed units of either **R/hr**, **Sv/h**, **C/m**, or **C/s**. The scaler mode is selected by selecting the "SCALER" position. Depressing the black pushbutton switch located in the end of the instrument handle starts the scaler count sequence. "COUNTING" will be displayed on the LCD during the counting sequence for the predetermined count time selected in the parameter setup. Once the scaler count is started, the "RATEMETER/SCALER" switch can be switched back and forth without disturbing the scaler counting sequence. Both the ratemeter and scaler ALERT and ALARMs (ALARM only for scaler) will initiate if the respective threshold level(s) is(are) exceeded. All of the alarms are concurrent; therefore, it is not necessary to be in the related ratemeter or scaler operating mode to initiate an ALERT or ALARM condition.

4. PRELIMINARY INSTRUCTIONS

4.1 Unpacking and Repacking

- Remove calibration certificate and place in secure location. Remove instrument and accessories (batteries, cable, etc.) and ensure that all of the items listed on the packing list are in the carton. If more than one instrument is in carton (such as M2241-2 and detector(s)), refer to the calibration certificate(s) for serial number (S/N) match. The Model 2241-2 serial number is located on the front panel below the battery compartment. Most LMI detectors have a label on the base or body of the detector for the Model and S/N identification.

- To return instrument for repair or calibration, provide sufficient packing material to prevent damage during shipment. Provide appropriate warning labels to ensure careful handling. Include detector(s) and related cable(s) for calibration. Include brief information as to the reason for return and return shipping instructions (address, P.O. Box #, etc.).

  - return shipping address
  - customer name or contact
  - telephone number
  - description of service requested and all other necessary information

5. OPERATING INSTRUCTIONS

5.1 Safety Measures

CAUTION

The detector operating voltage (HV) is supplied to the detector by way of the input connector. A mild electric shock may occur if you make contact with the center pin of the input connector. Switch the Model 2241-2 to the "OFF" position before connecting or disconnecting the cable or detector.

5.2 Descriptions of Controls and Functions

5.2.1 Operator Controls

- **OFF/RATEMETER/SCALER Switch:** A 3-position rotary switch which applies power to the instrument and selects RATEMETER or SCALER counting modes.

- **DETector Select Switch:** A protected toggle switch that toggles between DET 1 parameters and DET 2 parameters

- **DISPLAY:** A 4-digit LCD readout with 2-digit overflow (SCALER mode) and moving decimal point. The 2 smaller digits located in the lower right corner of the display indicate counter overflow when in the scaler counting mode (equivalent to a 6-digit scaler) or exponential power when in the parameter setup mode. The upper right of the LCD exhibits units and multiplier(s) – R/hr, mR/hr, or µR/hr; Sv/h, mSv/h or µSv/h; C/m, kC/m, C/s , or kC/s. The bottom part of the readout displays the "ALARM," "ALERT," "OFLOW," "OVERLOAD" annunciators and the "low battery" icon. "COUNTING" indicates that the SCALER mode has been initiated and is in the counting process.

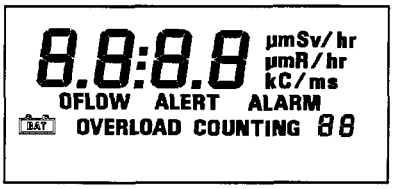

DISPLAY STATUS DEFINITIONS

o **ALARM** - Ratemeter or scaler count has increased above the preset alarm threshold. An audible continuous tone will accompany the "latching" **ALARM** condition. Depressing the "RESET" switch will acknowledge the audible ratemeter and/or scaler alarm. Depressing the "RESET" switch a second time will reset the ratemeter reading and ratemeter alarm. To reset the scaler alarm, depress the count switch located in the carrying handle to re-initiate the scaler count cycle.

o **ALERT** - Ratemeter count has increased above the preset alert threshold. To reset an **ALERT** condition, depress the "RESET" switch once if in the non-alarm condition and twice in an alarm condition. (The first depression in the alarm condition acknowledges the audible alarm.) The ratemeter will reset to the minimum displayable reading each time the alert is reset.

o **OFLOW** (Overflow) - RATEMETER mode – Indicates that the incoming count exceeds the capability to display stable or reliable readings corresponding to the radiation level being measured. The overflow symbol will appear when the ratemeter exceeds 100k cps or if the dead time correction is greater than 75%.

An **OFLOW** will appear in the SCALER mode when the 6-digit display (4 digits display and 2 overflow digits in right corner) reaches 999999 and starts to roll-over again.

○ **OVERLOAD** - Indicates that the detector is being exposed to radiation intensities greater than the detector maximum operating limit. For alpha and/or beta-type scintillation detectors, an "**OVERLOAD**" may indicate that the detector face has been punctured, allowing external light to saturate the photomultiplier tube inside the detector. The overload alarm point is set by adjusting the "OVL" control located underneath the "CAL" cover.

○ **"low battery" icon** - Indicates that the batteries have decreased to the minimum operating voltage of 2.2 ±0.1 Vdc.

○ **COUNTING** - Indicates that the scaler count switch has been depressed, and the scaler is accumulating counts for the pre-determined count time.

• **AUD ON/OFF Switch:** Front panel toggle switch which silences or enables the clicks-per-event audio. The audible ALARM is independent of the "AUD ON/OFF" switch and will override the audible clicks-per-event. An audible alarm can only be silenced by depressing the "RESET" button.

• **F/S (Fast/Slow) Response Switch:** A 2-position toggle switch which selects fast or slow counting response time.

○ For the variable response mode, the "F" position allows the time constant (TC) to vary from 1 to 10 seconds, while the "S" position varies from 1 to 30 seconds. The response time is automatically adjusted in proportion to the incoming count rate between the "F/S" TC variables.

○ For the fixed response mode, the "F" position corresponds to the selected fixed response time - TC. The "S" position is 5 times the selected fast TC.

• **LIGHT (LCD Backlight):** A pushbutton switch, when depressed, illuminates the LCD for a pre-programmed time. The backlight "ON" time can be selected between 5 and 240 seconds during the parameter setup.

• **RESET Pushbutton Switch:** In the non-alarm condition, depressing the "RESET" switch resets the ratemeter display to the minimum display readout. In an alarm condition (ratemeter or scaler), depressing "RESET" will silence the audible alarm. Depressing "RESET" a second time will reset the ratemeter alarm and/or alert condition. The scaler alarm can only be reset by depressing the scaler count switch located in the end of the Model 2241-2 handle.

• **Scaler Count Switch:** Pushbutton switch located in the end of the Model 2241-2 carrying handle which, when depressed, initializes the start of the scaler count accumulation for the preset scaling time. The "OFF/RATEMETER/SCALER" switch must be in the "SCALER" position to initiate the counting cycle. The scaler display uses the 2 digits in the lower right hand corner for the 2 most significant digits of the 6-digit readout. Scaling time can be set from 1 to 9999 seconds in the parameter setup via the switch board. Depressing the "Count" switch after a scaler ALARM will reset the scaler display to "0," resetting the alarm

condition.

■ Remove the "CAL" cover to access the following controls:

- **DISC 1 and DISC 2 (Discriminator 1 and 2):** Two independent multi-turn potentiometers (approximately 20 revolutions), used to vary the detector pulse-counting threshold from 2 to 100 millivolts for DET 1 and DET 2, respectively. A Ludlum Model 500 Pulser or equivalent should be used in checking or adjusting the pulse discrimination parameter.

- **OVL (Detector Overload):** A multi-turn potentiometer (approximately 20 revolutions) which adjusts the detector current level that must be exceeded to initiate an "OVERLOAD" alarm. This control adjusts the current level discrimination point from 0.5 and 40 microamperes, corresponding to the specific detector saturation point.

✔NOTE

Measure the HV at the detector connector with a Ludlum Model 500 Pulser or a high impedance voltmeter with a high voltage probe. The impedance of the voltmeter must be 1000 megohms or greater.

- **HV1 and HV2:** Multi-turn potentiometers (approximately 20 revolutions) used to vary the detector voltage from 200 to 2500 volts. The maximum HV output is adjusted by the "HV LIMIT" potentiometer located on the internal main board.

5.2.2 Main Board

To access the internal circuit boards, unlatch the latches at each end of the Model 2241-2. Carefully separate the top chassis from the bottom cover (referred to as a "can"). The can has the audio speaker (unimorph) with a 2-conductor cable attached to the main board. The audio plug may be disconnected during the internal control adjustments.

- **HV LIMIT (R027):** A multi-turn potentiometer (approximately 20 revolutions) which sets the maximum HV limit with the front panel "HV" control adjusted to the maximum clockwise position. It is adjustable from 1250 to 2500 Vdc.

- **VOLUME (R002):** A multi-turn potentiometer (approximately 20 revolutions) which varies audible click-per-event and alarm audio. Adjust the control to the maximum clockwise position for maximum volume.

✔NOTE

If the "VOLUME" control is adjusted to the maximum counterclockwise position the clicks-per-event or the audible alarm(s) will not be audible when active.

5.2.3 Switch Board

■ The switch board utilizes a 16-position rotary switch ("FUNCTION") to select the 16 setup parameters. (Refer to schematics and component layout drawing near the end of the manual.) All of the setup parameters are stored in the non-volatile EEPROM, which will retain data even after the Model 2241-2 batteries are removed. After the parameters are entered, the switch board can be removed, and the Model 2241-2 will operate from the programmed information for the specific detector setup prior to the removal of the board.

ENTERING OR CHANGING SWITCH BOARD PARAMETERS:

☐ Select the desired parameter to enter or change selecting the corresponding "FUNCTION" switch position. Depress the "ENTER" pushbutton switch, and a character will start to flash. The flashing character indicates that the program is in the parameter change mode.

☐ To change the character, increment the "UP" switch to the desired variable. To shift to another character, increment the "LEFT" switch, which enables the operator to sequence through all the characters on the LCD associated with that particular parameter.

☐ Once the desired data is entered, depress the "ENTER" switch. The LCD should quit flashing and display the new parameter data.

✔NOTE

The DETECTOR SELECT toggle switch allows the Model 2241-2 to have 2 sets of operating parameters.

- **FUNCTION Switch:** A 16-position rotary switch labeled "0-9" and "A-F." This switch selects a parameter setup mode for the Model 2241-2. If the board is not installed, the normal operation mode (counting mode) is selected. If the switch board is installed, the selector switch must be set to the "0" position for normal operation. The following may be changed using this board:

  - detector parameters,
  - current detector setup in use,
  - RS-232 communication baud rate,
  - RS-232 data dump mode, and
  - RS-232 detector parameters set/read mode.

FUNCTION SWITCH POSITION DESCRIPTIONS AND VARIABLES:

- **POSITION 0:** NORMAL OPERATION, places the Model 2241-2 in the normal (counting) operating mode. Unplugging the switch board from the Model 2241-2 main board defaults to the normal operating mode.

- **POSITION 1:** DEAD TIME (μs), allows changing the detector dead time correction for the current detector setup. Setting this parameter to "0" disables dead time correction. The dead time adjusts from 0 to 9999 microseconds (μs). The incoming counts are adjusted for dead time using the following formula:

$$n = \frac{m}{1 - m\tau}$$

where,

n = corrected counts per second

m = incoming count per second

τ = system dead time

- **POSITION 2:** CALIBRATION CONSTANT, allows changing the calibration constant for the current detector setup. The calibration constant (CC) adjusts from 0.001 to 280×10^9. The calibration constant converts counts/time base to units/time base. CC must be set to "1" to readout in cps or cpm.

$$CC = \frac{cps \times time\ base}{rate}$$

CC CONVERSION TABLE

Conversion Rate	Multiply by to get CC
cps/μR/hr	3.6×10^9
cps/mR/hr	3.6×10^6
cps/R/hr	3600
cpm/μR/hr	60×10^6
cpm/mR/hr	60,000
cpm/R/hr	60
cps/μSv/h	3.6×10^7
cps/mSv/h	36,000
cps/Sv/h	36
cpm/μSv/h	60×10^4
cpm/mSv/h	600
cpm/Sv/h	0.6

Example: Ludlum Model 44-9 G-M detector produces approximately 3300 cpm/mR/hr for ^{137}Cs ➜ 60,000 x 3300 = 198×10^6 for CC

- **POSITION 3:** DISPLAY UNITS, selects the display units for the associated detector setup number. The Model 2241-2 and detector may be calibrated in either exposure rate (R/hr or Sv/h) by entering the appropriate Calibration Constant (position 2) and Dead Time correction (position 1). The Model 2241-2 will automatically convert to the correct reading when switching between R and Sv.

The time base for count "C" is set independently in position 4. The display units may be set to:

- R/hr (Roentgens)
- Sv/h (Sieverts)
- C/time base (Counts)

The display is auto-ranging with the appropriate multiplier symbol appearing in-front of the "R," "Sv," or "C" to indicate the range:

- μR/hr, mR/hr, R/hr
- μSv/h, mSv/h, Sv/h
- C/s, kC/s, C/m, kC/m

- **POSITION 4:** TIME BASE: CPS, CPM, selects the display time base for the current detector setup. This time base only applies if the units are set to **C/** (Counts/time). The time base for R/hr and Sv/h is fixed in "hr." For "true" reading (Pulser calibration) cpm or cps calibrations, set the Calibration Constant (CC, parameter 2) to read "1." For geometry calibrations, the detector efficiency can be entered for CC. (Example: For alpha scintillation detector with 25% 2-pi efficiency; enter "250 $_{-3}$" in the CC parameter setup.)

The display time base may be set to:

- seconds (**s**)
- minutes (**m**)

- **POSITION 5:** AUDIO DIVIDE BY, selects the audible clicks-per-event division rate for the current detector setup. If the audio "ON/OFF" switch is off, then no audio clicks will be heard. This parameter ranges from:

0 ≡ Divide By 1
1 ≡ Divide By 10
2 ≡ Divide By 100
3 ≡ Divide By 1000

- **POSITION 6:** RESPONSE TIME, allows changing the time constant (TC) for the current detector setup. If the response is set to "0," the Model 2241-2 automatically calculates (for variable mode) the time constant based on the incoming cps. If a variable of 1-199 is entered for TC, the response time becomes fixed:

Variable Response - Response time is varied in proportion to the incoming count rate. The 2-position "F/S" (Fast/Slow) toggle switch selects the maximum time constant (TC) for the variable mode. The fast position varies the TC from 1-10

seconds, and the slow position varies from 1-30 seconds.

Fixed Response - The Fast ("F") response position is programmable from 1-199 seconds, and the slow response is 5 times the fast TC. For MDA-type measurements, the fixed response time mode is recommended.

✔NOTE

****REFER TO NOTE ON PAGE 2, REGARDING TIME CONSTANT****

- **POSITION 7:** RATEMETER ALARM/ALERT, allows changing the ratemeter alarm for the current detector setup. The units of this alarm are the same as the units for the ratemeter display units. The fifth push of the left button allows the decimal point to be moved. The ratemeter alarm adjusts from 1μ to 999 R/hr (Sv/h) or 1 to 999 kcpm or 1 to 100 kcps. The units of the alarm are determined by the units for the ratemeter.

- **POSITION 8:** SCALER ALARM/COUNT TIME, sets the scaler alarm variable from 1-999999, corresponding to the accumulated scaler count. After the scaler alarm variable is entered, the scaler count time is prompted. The scaler count time is adjustable from 1-9999 seconds.

- **POSITION 9:** NOT USED

- **POSITION A:** NOT USED

- **POSITION B:** LCD Backlight ON TIME, is the amount of time that the LCD backlight will stay on after pressing the front panel switch labeled "LIGHT." This value is stored in EEPROM. Available values are:

  - 5 seconds
  - 30 seconds
  - 60, 90 seconds
  - 180, 240 seconds.

- **POSITION C:** SET MINIMUM DISPLAY, sets the ratemeter minimum displayable reading. Depressing the "RESET" switch displays the minimum ratemeter units. The readout will auto-range up to the maximum displayable but will display "0" for ratemeter readings below the user-programmed minimum variable.

Minimum displayable values:

00.0μ, 000μ, 0.00m, 00.0m, 000m, 0.00, 00.0, 000 R/hr
.000μ, 000μ, 00.0m, 000m, 0.00, 00.0, 000 Sv/h
0.00, 00.0, 000, 0.00k, 00.0k, 000k cpm or cps

- **POSITION D:** R-232 DATA DUMP MODE, allows the RS-232 port to dump ratemeter data every 2 seconds. The Model 2241-2 is fully functional, except all audio is disabled during the data dump mode. The LCD will alternate between the ratemeter and the word **"dUP"** (representing "dump")
.

- **POSITION E:** RS-232 DETECTOR PARAMETERS SETUP MODE, allows the RS-232 port to accept/send a string of parameters corresponding to the current detector setup values.

- **POSITION F:** BAUD RATE, configures the RS-232 port for the following baud: 150, 300, 600, 1200, 2400, 4800, 9600, and 19200. The data is 8 data bits, 1 stop bit with no parity bit. This value is stored in EEPROM. The baud rate can only be programmed by the switch board.

- **RS-232** PORT CONNECTOR: This 9-pin "D" type connector is designed as a

DCE port. A straight wire cable (extension cable) connects the Model 2241-2 to a computer 9-pin RS-232 port.

RS-232 CONNECTOR PIN OUT:

PIN	FUNCTION
1	NC (No Connection)
2	DATA OUT
3	DATA IN
4	NC
5	NC
6	NC
7	HANDSHAKING IN
8	HANDSHAKING OUT
9	NC

LMI offers a PC compatible software program which incorporates the read/write commands necessary to communicate between the PC and Model 2241-2. The program also incorporates an algorithm to calculate the detector Calibration Constant and Dead Time Constant. The software is offered in a DOS version (DOS 6.0 or 6.2, LMI part number 1370-025) or a WINDOWS version (WIN 3.1, LMI part number 1370-024). Software is available on both 3.5-inch or 5.25-inch disks.

5.3 Operating Procedures

BATTERY INSTALLATION

☐ Ensure the Model 2241-2 power switch is in the "OFF" position. Open the battery lid by turning the quarter-turn thumb screw counterclockwise. Install two "D" size batteries in the compartment. Note the (+) and (-) marks inside the battery door. Match the battery polarity to these marks. Close the battery box lid.

✔NOTE

Center post of flashlight battery is positive. The batteries are placed in the battery compartment in opposite directions.

☐ Connect a detector to the Model 2241-2 with the appropriate cable.

☐ Turn the "OFF/RATEMETER/ SCALER" switch to the "RATEMETER" position.

■ The display goes through an initialization sequence. The display will show all "8"s with decimal points. Check to make sure all segments are on as illustrated:

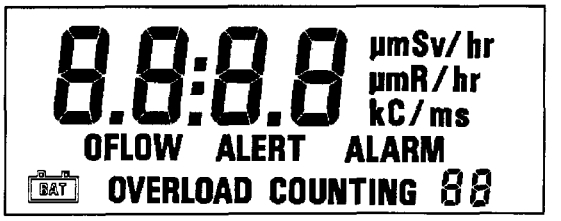

■ The LCD then shows the firmware number in the format "P-XX YY." The "XX" is the firmware number, and the "YY" is the firmware version. (The figure below is for example only, to illustrate location of display.)

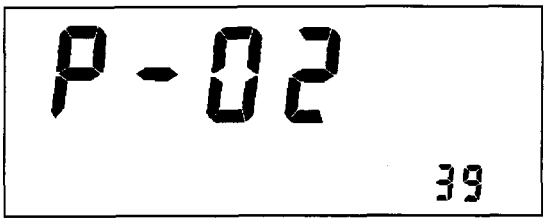

■ The minimum displayable value (for example 00.0µR/hr) should be shown. When switched to the scaler position, a single "0" will be displayed.

■ The display will auto range to the current level (See following figure.) When auto-ranging down, the Model 2241-2 uses multiples of 5. This technique keeps the decimal point from jumping between numbers when viewing values around multiples of 10.

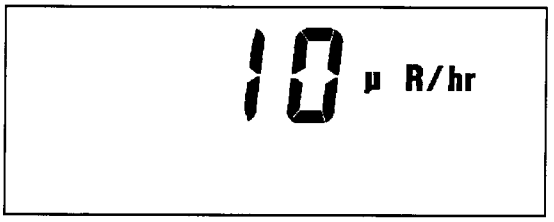

☐ Expose the detector to a check source if the background count is too low to generate a display reading. Switch "AUD ON/OFF" to the "ON" position and confirm the external unimorph produces an audible click for each event detected (audio divide by "1" parameter). The "AUD ON/OFF" switch will silence the clicks if in the "OFF" position; however, an audible alarm condition will still be heard.

☐ Increase the source activity or lower the alert and alarm points to initiate an ALERT and ALARM condition. (Refer to section 5.2.3 for parameter change procedures.) Depress the "RESET" switch to acknowledge the audible alarm. Decrease the radiation activity below the ALERT and ALARM threshold and depress the "RESET" switch to clear the alarm conditions. If an alarm condition is not present depressing the "RESET" switch the first time will reset the alert condition and zero the ratemeter.

☐ Position a check source to produce a ratemeter reading of 100 to 2000 counts/minute or 10-100µR/hr. While observing the ratemeter fluctuations, select between the fast and slow response time ("F/S") positions to observe different variations in the display. The "S" position should respond approximately 5 times slower (for fixed response mode) and 3 times slower (for the variable response mode) than the "F" position. (Refer to section 5.2.3 for explanation.) The slow response position is normally used when the Model 2241-2 is displaying low numbers which require a more stable display. The fast response is used at the high count levels.

☐ Switch to "SCALER" position. Depress Count switch located in the end of the carrying handle to initiate count cycle. The word "COUNTING" should be visible in the display during count cycle and should disappear at the end of the predetermined count time. If a scaler alarm condition occurs, the "RESET" switch can be depressed to acknowledge the alarm, but the Count switch must be depressed to clear the visual "ALARM" to restart count cycle.

☐ Depress and release the "LIGHT" switch. The backlight located behind the LCD should illuminate for pre-programmed "ON" time.

☐ Select the desired F/S, AUD ON/OFF, and RATEMETER or SCALER parameters and proceed to use instrument.

5.4 Calibration

■ The Model 2241-2 calibration routine consists of entering detector parameters into memory by way of the switch board and adjusting the "CAL" controls ("HV," "DISC". and "OVL") for the specific detector operating requirements.

• Section 5.4.1 is a general overview for determining various detector operating voltages (HV) and adjustment of counter input sensitivity (DISC).

● Section 5.4.2 sequences through the pulse generator Counts/minute calibration. The cpm parameter setup is used in the initial instrument checkout procedure.

● Exposure rate calibration is covered in section 5.4.3. The detector Calibration Constant (CC) and Dead Time Compensation (DTC) are the two primary parameters used in the exposure rate calibrations (R/hr and Sv/h). These 2 constants are alternately varied to achieve linearity at the detector non-linear operating regions. An example of the Ludlum Model 44-9 G-M detector calibration is given at the end of section 5.4.3 to illustrate the algorithm used in determining the CC and DTC variables.

5.4.1 General Detector Setup Information

■ The operating point for the instrument and probes is established by setting the probe voltage and instrument sensitivity (HV and DISC). The proper selection of this point is the key to instrument performance. Efficiency, background sensitivity, and noise are fixed by the physical makeup of the given detector and rarely vary from unit to unit. However, the selection of the operating point makes a marked difference in the apparent contribution of these 3 sources of count.

● In setting the operating point, the final result of the adjustment is to establish the system gain so that the desirable signal pulses are above the discrimination level and the unwanted pulses from background radiation and noise are below the discrimination level and are not counted.

● The total system gain can be controlled by adjusting either the instrument sensitivity or the high voltage. "HV" controls the gain of the detector; and "DISC" (Discriminator) controls the instrument counting threshold (sensitivity).

■ In the special case of G-M detectors, a minimum voltage must be applied to establish the Geiger-Mueller characteristic. Further changes in HV will have little effect on this type detector.

■ G-M DETECTORS: The output pulse height of the G-M Detector is not proportional to the energy of the detected radiation. Adjusting "DISC" will have minimal effect on observed count rate unless the "DISC" setting is so low that the instrument will double pulse.

For most G-M Detectors, set "DISC" for 30-40 millivolts and adjust "HV" to the G-M detector recommended high voltage. Most G-M detectors operate at 900 volts, although some miniature detectors operate at 450-550 volts. If a recommended setting is unavailable, plot count rate versus HV to produce a plateau graph. Adjust the HV for 25-50 volts above the knee or start of the plateau. For mixed detector use, both sensitivity and high voltage may be "tailored" for other detectors as long as the G-M detector is operated within the recommended voltage range. Caution must be observed in lowering the input sensitivity to ensure that the counter does not double or multiple pulse.

■ For air proportional alpha detectors, set the "DISC" for 2-millivolt discrimination. Adjust "HV" until the detector just breaks down (shown by a rapid increase of count rate without a source present). Measure the HV output; then decrease the HV setting to operate 100 volts below breakdown.

■ For proportional detectors, set the "DISC" control for 2-millivolt

discrimination (near maximum clockwise). Expose the detector to a check source and plot count rate versus HV, similar to the one in the figure below. Refine the HV adjustment for optimum source efficiency with a minimum acceptable background count.

■ For scintillators, set the "DISC" for 10 millivolts. Plot background and source counts versus HV to produce a plateau graph similar to the one in the figure. Adjust the HV to 25-50 volts above the knee or start of the plateau. This provides the most stable operating point for the detector.

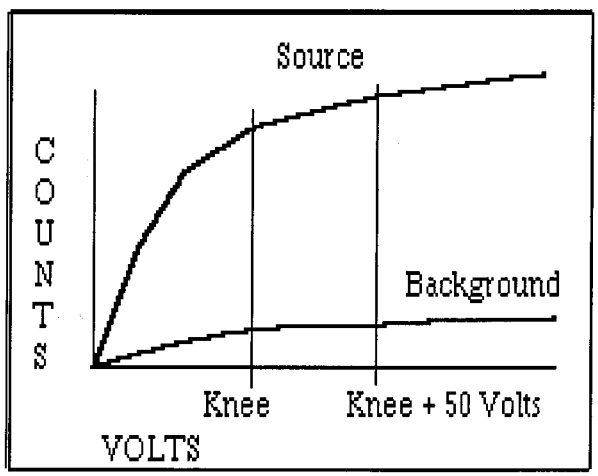

5.4.2 Counts/minute (C/m) Calibration

■ This procedure will setup the Model 2241-2 for the Counts/minute (C/m) mode of operation. Refer to section "5.2.3, ENTERING OR CHANGING SWITCH BOARD PARAMETERS," to enter setup parameter variables.

■ A Ludlum Model 500 Pulser or equivalent is required. If the pulser does not have a high voltage readout, use a high impedance voltmeter with at least 1000 megohm input resistance to measure the detector voltage.

☐ Switch "RATEMETER/SCALER" to the "RATEMETER" position. Select position "DET 1" on the toggle switch located on the front panel.

☐ Select "FUNCTION" switch positions "1-6" and adjust for the following parameters:

Switch Pos.	Parameter	Function
1	0000 s-6	Dead Time
2	0100 -2	Calibration Constant
3	c/	Display Units
4	m	Timebase
5	1	Audio Divideby
6	000 s	Response Time

☐ Position "7" selects the desired ratemeter ALERT and ALARM trip points. If the parameters are undetermined, arbitrarily choose "0050 kC/m" for the alarm and "0045 kC/m" for the alert to confirm operation of the alert/alarm function.

☐ Position "8" selects the scaler ALARM parameter and the scaler count time. If the values are unknown, set the scaler alarm to "4500ALARM00" and the count time to "0060" (60 second count time).

☐ Position "9" is not used, and position "A" is not used. Switch to position "B" and enter "15" for a 15-second backlight "ON" time. Switch to position "C" and enter "00.0 C/m" for the minimum displayable value. Select position "0" to return to normal operation.

☐ Connect the Model 500 Pulser to detector input and adjust "HV" and "DISC" to the specific detector operating parameters.

☐ Adjust the pulser amplitude to 1.5 times the Model 2241-2 discrimination level. Adjust the pulser output to 800 cpm and confirm that the Model 2241-2 reads 800 C/m ±10%. Adjust count output to 200 cpm and confirm that the LCD displays 200 C/m ±2%. Confirm that the 20 and 80% readings for the upper decades are within the pulser input by decading the pulser count output. Alternately switch to the scaler mode to initiate the scaler count accumulation. Confirm that the scaler readout is within ±2% of the pulser input rate.

☐ Ensure that the ALERT and ALARMs function by inputting the preset alarm levels as to initiate the alert and alarm conditions.

5.4.3 R/hr Calibration

■ The following calibration procedure assumes that detector Calibration Constant (CC) and Dead Time Constant (DTC) are already known. If these 2 constants must be determined, reference section 5.4.4 to define CC and DTC.

☐ Switch toggle switch to "DET 2." Detector setup number "1" is usually reserved for the Counts/minute parameter calibration Rotate the "FUNCTION" switch counterclockwise to position "1" and enter the detector Dead Time in μs. Rotate to position "2" and enter the Calibration Constant. Enter the desired parameters for positions "3-F." Switch to position "0" for normal operation.

☐ Expose the detector to calibrated radiation fields extending from the lower to the upper operating range of the detector. Confirm that the linearity is within ±10% of each respective reading. If the readings are off on the lower detector operating region, vary CC. If the readings are off at the upper end of the detector operating region, adjust DTC.

5.4.4 Determining CC and DTC

■ This procedure contains the algorithm *(hi-lo method)* for determining the CC and DTC calibration constants. An example of the Ludlum Model 44-9 G-M detector calibration is used in conjunction with the algorithm calculations to aid in solving the equations.

LMI offers a PC-compatible software program which incorporates the read/write commands necessary to communicate between the PC and Model 2241-2. The program also incorporates the algorithm to calculate the detector CC and DT. The software is offered in a DOS version (DOS 6.0 or 6.2, LMI part number 1370-025) or a WINDOWS version (WIN 3.1, LMI part number 1370-024). Software is available on both 3.5-inch or 5.25-inch disks.

■ The *hi-lo method* refers to the placement of the detector in a radiation field using a 2- point (CC and DT) calibration to linearize the detector response, even in the non-linear operating regions of the detector. The low radiation field (CC) should be a field that yields from 2 to 5 percent count loss. The high radiation field (DT) should be a field that yields from 30 to 60 percent count loss. The algorithm ignores background counts, therefore the low field must be at least ten times the background count. The following summary lists the calibration constraints.

CALIBRATION AND DEAD TIME CALIBRATION CONSTRAINTS

FIELD	CONSTRAINT
BACKGROUND ■	*10 times less than low field
LOW FIELD ■	Yields from 2 to 5 percent count loss
HIGH FIELD ■	Yields from 30 to 60 percent count loss

* This constraint only applies when using 2 sources (2 fields) or a radiation range calibrated without background consideration.

PRELIMINARY CPS SETUP

Refer to section "5.2.3, ENTERING OR CHANGING SWITCH BOARD PARAMETERS," for cps readout variables.

☐ Select position "DET 1" on the toggle switch located on the front panel. Starting with "FUNCTION" switch position "1," enter the following variables:

Switch Pos.	Parameter	Function
1	0000s-6	Dead Time
2	0100 -2	Calibration Constant
3	C/	Display Units
4	m	Timebase
5	N/A	Audio DivideBy
6	N/A	Response Time
7	N/A	Ratemeter Alarm/Alert
8	0060 s	Scaler Alarm/ Count Time
9	Not Used	
A	Not Used	
B	N/A	LCD Backlight
C	000 C/s	Set Minimum Display
D-F	N/A	RS-232 Parameters

The following equations determine the *hi* and *lo* radiation fields used to acquire counts for the CC and DTC algorithm. These calculations require an unknown variable, DT (Dead Time). Typical dead times for some of the standard LMI detectors are referenced in the table at the end of this section. The *lo* count field should be a field which yields between 2 and 5% count loss. The *hi* count field (CPS^{HI}) should be a field which yields between 30 and 60% count loss.

$$CPS^{LO_{2\%}} = \frac{1}{49 \times DT}$$

$$CPS^{LO_{5\%}} = \frac{1}{19 \times DT}$$

$$CPS^{HI_{30\%}} = \frac{1}{2.3333 \times DT}$$

$$CPS^{HI_{60\%}} = \frac{1.5}{DT}$$

Reference the table at the end of this section to determine the cps/exposure rate (cps/ER). The conversion can be determined by placing the detector in a radiation field which produces from 50 to 200 cps.

Calculate the count/exposure rate using the equation below:

$$\frac{cps}{radiation\ field\ in\ exposure\ rate\ units} = cps / ER$$

For example, exposing a LMI Model 44-9 to a 2 mR/hr ^{137}Cs field yields approximately 110 cps so that:

$$\frac{110\ cps}{2\ mR\ /\ hr} = 55\ cps\ /\ mR\ /\ hr$$

The typical dead time for a M44-9 is approximately 85 µs. Therefore, using 85 µs for "DT" in equations 1-4, the *lo* field should be between 240 and 619 cps, and the *hi* field is between 5,040 - 17,650 cps. Dividing the cps values by the 55 cps/mR/hr conversion equates to between 4-11 mR/hr for the *lo* field and 91-320 mR/hr for the *hi* field.

Select a calibrated field between the *lo* and *hi* data points determined above:

lo (CAL_{lo}) = 8 mR/hr

hi (CAL_{hi}) = 200 mR/hr

The following procedure outlines the *hi-lo method.*

Abbreviations used:

units = Sv, R, counts.

CAL_{lo} = *lo* field calibration point.
CAL_{hi} = *hi* field calibration point.

$CORR_{lo}$ = recorded field at low calibration point.
$CORR_{hi}$ = recorded field at high calibration point.

DT = dead time constant entered into Model 2241-2.
CC = calibration constant entered into Model 2241-2.

f_d and a_d are intermediate steps in calculating DT
f_{cal} is an intermediate step in calculating CC

CC AND DTC ALGORITHM

Equations (5) and (6) convert units per time (R/hr Display Units) to units per second :

$$\frac{units}{time} \Rightarrow \frac{units}{second}$$

Insert the cps *lo* data point (8 mR/hr for the M44-9 example) determined from equations (1) and (2):

$$CAL_{lo} = (0.008\ \frac{R}{h}) \times (\frac{1\ h}{60\ m}) \times (\frac{1\ m}{60\ s}) = \quad 2.22 \times 10^{-6}\ \ s$$

Insert the cps hi data point (200 mR/hr for the M44-9 example) determined from equations (3) and (4):

$$CAL_{hi} = (0.200\ \frac{R}{h}) \times (\frac{1\ h}{60\ m}) \times (\frac{1\ m}{60\ s}) = \quad 55.6 \times 10^{-6}\ \ s$$

Place detector in the low field and enter the counts per second:

$$CORR_{lo} = \frac{SAMPL_{lo}}{count\ time} = \quad \frac{counts}{s}$$

NOTE: The low field count sample should be ≥ 3000 counts. Use the Scaler and adjust the count time to accumulate count ≥ 3000.

As an example, assume a 60-second count sample in a low field of 8 mR/hr:

$$CORR_{lo} = \frac{26,427}{60} = \quad 440\ C\ /\ s$$

Place detector in the high field and enter the counts per second:

$$CORR_{hi} = \frac{SAMPL_{hi}}{count\ time} = \quad \frac{counts}{s}$$

Counts/second sample in high field of 200 mR/hr:

$$CORR_{hi} = \frac{5830}{1} = \quad 5830\ C\ /\ s$$

Insert the values calculated in equations (5), (6), (7), and (8) and solve for f_d:

$$f_d = CAL_{hi} - \frac{CORR_{hi} \times CAL_{lo}}{CORR_{lo}} = \frac{units}{s}$$

$$f_d = 55.6 \times 10^{-6} - \frac{5830 \times 2.22 \times 10^{-6}}{440} = 26.2 \times 10^{-6} \quad s$$

Solve for a_d:

$$a_d = (CAL_{hi} \times CORR_{hi}) - (CAL_{lo} \times CORR_{hi}) = \frac{units \cdot count}{s^2}$$

$$a_d = (55.6 \times 10^{-6} \times 5830) - (2.22 \times 10^{-6} \times 5830) = 31.1 \times 10^{-2}$$

Enter the results of equations (9) and (10) into equation (11) to solve for DT:

$$DT = \frac{f_d}{a_d} = \frac{s}{count}$$

$$DT = \frac{26.2 \times 10^{-6}}{31.1 \times 10^{-2}} = 8.4 \times 10^{-6} \quad s$$

Solve for f_{cal}:

$$f_{cal} = CAL_{lo} - (CAL_{lo} \times CORR_{lo} \times DT) = \frac{units}{s}$$

$$f_{cal} = 2.22 \times 10^{-6} - (2.22 \times 10^{-6} \times 440 \times 84 \times 10^{-6}) = 2.14 \times 10^{-6} \quad s$$

Enter the result of equation (12) into:

$$CC = \frac{CORR_{lo}}{f_{cal}} = \frac{count}{units}$$

and solve for CC:

$$CC = \frac{440}{2.14 \times 10^{-6}} = 206 \times 10^{6}$$

☐ Enter the "CC" and "DT" values (positions "1" and "2" of the "FUNCTION" switch), derived from the equations above. Perform section 5.4.3 to confirm that the instrument and detector have been calibrated correctly.

Model 44-9 Parameter Setup

FUNCTION	Parameter
1	0084 S-6
2	0206 06
4	N/A
5-8	as desired
B-C	as desired
D-F	if applicable

TYPICAL COUNT RATE AND DEAD TIME FOR LMI DETECTORS

MODEL & TYPE	COUNT RATE	DEAD TIME in μs (microseconds)
44-6, G-M	20 cps/mR/hr	90-110 μs
44-9, G-M	55 cps/mR/hr	80-90 μs
44-7, G-M	35 cps/mR/hr	240-290 μs
133-2, G-M	17.5 cps/mR/hr	40-55 μs
133-4, G-M	2 cps/mR/hr	40-55 μs
133-6, G-M	0.3 cps/mR/hr	40-55 μs
44-2, Gamma Scint.	2800 cps/mR/hr	8-12 μs*
44-10, Gamma Scint.	15,000 cps/mR/hr	18-20 μs
44-3, Low-Energy Gamma Scint.	N/A, operated in Counts/units mode	8-12 μs*
44-21, Beta/Gamma Scint.	N/A, operated in Counts/units mode	8-12 μs*
43-5, Alpha Scint.	N/A, operated in Counts/units mode	20-28 μs

✔**NOTE**: The data represented in the table above are typical values and may vary among detector and instrument combinations. This table represents some of the common detectors operated with the Model 2241-2. Consult LMI sales department for information concerning detectors not given in the table above.

*The dead time values for these scintillation detectors is due to the dead time of the Model 2241-2 electronics.

5.4.5 Detector Overload (OVL) Calibration

✔NOTE

The detector operating voltage (HV) must be determined and adjusted before the "OVL" adjustment is performed. If the HV is varied or another detector is substituted, "OVL" must be readjusted. If the OVL feature is not used, adjust the control to the maximum counterclockwise position.

■ The detector overload circuit senses current flow through the detector. As the radiation intensity is increased, the detector may start to saturate (decrease pulse production), and the readout may decrease or read zero. But as the pulse output continues to decrease in the saturated field, the detector current drain continues to increase. This increase in current is detected by a comparator circuit which triggers the "OVERLOAD" annunciation on the LCD by way of the microprocessor.

■ For G-M and gamma scintillation detectors, the "OVL" trip point is adjusted to the point to where the readout no longer increases with increasing radiation intensity. In the event that the overload point cannot be determined due to radiation field limitations, adjust the overload point from 5 to 10 times the upper operating range of the detector.

☐ Adjust the "OVL" control to the maximum counterclockwise position.

☐ Place the detector in an increasing radiation field in which the readout no longer increases. Adjust the "OVL" control until the "OVERLOAD" alarm appears. Position the detector between the upper operating limit and the "OVL" set point and ensure the "OVERLOAD" alarm is defeated. Adjust the "OVL" control accordingly.

Example: Ludlum Model 44-9 is calibrated with Model 2241-2 in the R/hr units display, utilizing DT. The upper linear operating point is 400 mR/hr for the M44-9. Place the detector at the 1000 mR/hr point and adjust the "OVL" control to initiate the "OVERLOAD" alarm. Place the detector in the 600-700 mR/hr field and ensure that the "OVERLOAD" is off.

The detector overload or saturation point for alpha and/or beta scintillation detectors is when the detector face (mylar) has been punctured, allowing light to saturate the photomultiplier tube (PMT). The pulse output will decrease or even appear non-responsive to any radiation activity, depending upon the size of the puncture and the light intensity to the PMT.

☐ Expose the detector PMT to a small light leak by loosening the detector window. Some scintillation detectors incorporate a screw in the detector body which, when removed, will simulate a detector face puncture. The ratemeter readout should start to decrease as the light saturates the PMT.

☐ Adjust the "OVL" control until the "OVERLOAD" alarm just appears. Reseal the light leak connection and expose the detector to a radiation source that will produce a near full-scale reading. Confirm that the "OVERLOAD" alarm does not initiate. Readjust the "OVL" control as required.

6. THEORY OF OPERATION

6.1 Main Board

Refer to main board schematic for the following:

6.1.1 Detector Input/Amplifier

Negative-going detector pulses are coupled from the detector through C021 to Amplifier U021. R024 and CR021 protect the input of U021 from inadvertent shorts. Self-biased amplifier U021 provides gain in proportion to R022, divided by R025. Transistor pins 4, 5, and 6 of U021, provide amplification. Pins 10-15 of U021 are coupled as a constant current source to pin 6 of U021. The output self-bias to 2Vbe (approximately 1.4 volts) at pin 7 of U021. This provides just enough bias current through pin 6 of U021 to conduct all of the current from the constant current source. Positive pulses from pin 7 of U021 are coupled to the discriminator (U011) through R031 and C012.

6.1.2 Discriminator

Positive pulses from amplifier U021 are coupled to pin 2 of U011 comparator. The discrimination level is set by the "DISC" control connected to pin 3 of U011. As the positive pulses at pin 2 of U011 increase above DISC reference at pin 3, pin 1 goes low, producing a low pulse. Pin 1 of U011 is normally held high (+5V) by R014.

The low pulse from pin 1 of U021 is coupled to univibrator U001. U001 shapes and fixes the pulse-width to approximately 10 μs. The Univibrator is configured in the non-retriggerable mode. Negative pulses from pin 9 of U001 are coupled to the μP for counting.

6.1.3 Low Voltage Supply

Battery voltage is coupled to DC-DC convertor U231. U231 and related components provide +5V to power the μP, op-amps, and logic circuitry. R135 and R136 provide voltage division for "low battery" detection. Pin 6 of U231 provides a low signal when the battery voltage decreases to +2.2 ±0.1Vdc.

U121 provides the +2.5Vdc reference for the "HV" and "DISC" control references.

6.1.4 High Voltage Supply

High Voltage is developed by blocking oscillator Q241, T141, and C244 and rectified by voltage multiplier CR041-CR043, C041-C043, and C141. High voltage increases as current through R241 increases, with maximum output voltage with Q241 saturated.

High voltage is coupled back through R034 to op-amp pin 2 of U131. Resistor network R027, R132 completes the HV division circuit to ground. R027 provides HV limit from 1250-2500 when the "HV" control on the calibration board is at maximum. The regulated HV output is controlled by the "HV1" and "HV2" potentiometers located under the "CAL" cover on the front panel. This control provides the reference for comparator pin 3, U131. During stable operation, the voltage at pin 2 of U131 will equal the voltage at pin 3 of U131. Pin 1 of U131 will cause conduction of Q141 to increase or decrease until the HV finds a level of stability.

6.1.5 Detector Overload

A voltage drop is developed across R031 and sensed by comparator pins 5, 6 and 7 of U131 as detector current increases. When the voltage at pin 5 of U012 goes below pin 6, pin 7 goes low, signaling U111 (μP) to send the "OVERLOAD" alarm to the LCD. "OVL" (underneath "CAL" cover) control provides adjustment for the overload set point.

6.1.6 Microprocessor (μP)

U111 controls all of the data, control inputs, and display information. The clock frequency is crystal-controlled by Y221 and related components at 6.144 MHz. The μP incorporates internal memory (ROM), storing the program information. C102 resets the μP at power-up to initiate the start of the program routine. During the program loop, the μP looks at all the input switches for initiation or status changes and responds accordingly.

U122 is a 256 x 8 bit EEPROM used to store the setup parameters. The information is transferred serially from the μP. The EEPROM is non-volatile: retains memory even after power is removed.

6.1.7 Audio

Click/event, divide-by, and alarm audio pulse frequency is generated by the μP and coupled to Q101. Q101 then inverts the pulses and drives the bottom of T101. Bias voltage is provided by the volume control (R002) to the top of T101.

6.2 Switch Board

Refer to the switch board schematic for the following:

"S1" ("FUNCTION") is a 16-position binary rotary switch which selects the programmable parameters for the Model 2241-2. The switch selects the parameters using the hexadecimal numbering system via buss lines "SW1-SW4."

"S2-S4" are pushbutton switches which enter/change the variables for each of the 16 parameters.

U1 is a +5V powered RS-232 driver/receiver used to interface the Model 2241-2 to a computer.

6.3 Display Board

Refer to display board schematic for the following:

6.3.1 LCD drive

U111 and U211 are serial input 32-bit LCD drivers. The data is loaded serially into the 32-bit shift registers (internal) via the "D" IN input. The LOAD input instructs the shift register to receive data while the CLOCK input shifts the data through the 32-bit registers. After all the data is loaded, the LOAD line is pulsed by the μP, instructing the registers to transfer the data to the LCD drivers.

The backplane (BP) signal from U211 provides the reference signal (approximately 125 Hz at 5Vdc) to the LCD (DSP1) BP connection. When a segment is illuminated, the signal to that segment will be out-of-phase with the BP signal. If the segment is OFF, the signal will be in-phase with the BP signal.

6.3.2 Backlight Drive

Depressing the "LIGHT" switch instructs the μP to set the BACKLIGHT line, pin 31 on μP, "low" for the predetermined backlight ON time. (Refer to main board

schematic for details.) A "low" condition on pin 31 causes Q212 to conduct sending +3V to P8-3 on Display board With +3V at P8-3 (refer to display board schematic), backlight oscillator Q011, T011, and related components starts to oscillate, producing a 2.5kHz, sine wave signal. The signal is amplified by T011 to 150 volts peak-to-peak to drive the backlight.

7. MAINTENANCE

Instrument maintenance consists of keeping the instrument clean and periodically checking the batteries and the calibration.

An instrument operational check should be performed prior to each use by exposing the detector to a known source and confirming the proper reading on each scale.

Re-calibration should be accomplished after any maintenance or adjustment of any kind has been performed on the instrument. Battery replacements are not considered to be maintenance and do not normally require the instrument to be recalibrated.

Ludlum Measurements recommends recalibration at intervals no greater than one year. Check the appropriate regulations to determine required recalibration intervals.

The batteries should be removed and the battery contacts cleaned of any corrosion at least every 3 months. If the instrument has been exposed to a very dusty or corrosive atmosphere, more frequent battery servicing should be used.

Use a spanner wrench to unscrew the battery contact insulators, exposing the internal contacts and battery springs. Removing the handle will facilitate access to these contacts.

✔NOTE

NEVER STORE THE INSTRUMENT OVER 30 DAYS WITHOUT REMOVING BATTERIES. ALTHOUGH THIS INSTRUMENT WILL OPERATE AT VERY HIGH AMBIENT TEMPERATURES, BATTERY SEAL FAILURE CAN OCCUR AT TEMPERATURES AS LOW AS 100° FAHRENHEIT.

PARTS LIST

Ref. No.	Description	Part No.
	Model 2241-2 Dual Detector Digital Scaler/Ratemeter	
UNIT	Completely Assembled Model 2241-2 Dual Detector Digital Scaler/Ratemeter	48-2731
	Main Circuit Board, Drawing 408 X 91	
BOARD	Completely Assembled Main Circuit	5408-110
•	**CAPACITORS**	
C001	47pF, 100V	04-5660
C002	47pF, 100V	04-5560
C011	0.001µF, 100V	04-5659
C012	0.1µF, 50V	04-5663
C021	100pF, 3kV	04-5532
C031	0.0047µF, 3kV	04-5547
C032	100pF, 3kV	04-5532
C033	0.0047µF, 3kV, C	04-5547
C041-C043	0.0047µF, 3kV, C	04-5547
C101	47µF, 10V	04-5666
C102	10µF, 20V	04-5655
C121	47µF, 10V	04-5666
C122	27pF, 100V	04-5658
C123	27pF, 100V	04-5658
C131	0.0047µF, 3kV	04-5547
C132-C133	0.1µF, 50V	04-5663
C134	0.01µF, 50V	04-5664
C135	47µF, 10V	04-5666
C136	0.01µF, 50V	04-5664
C138	100pF, 100V	04-5661
C139	0.001µF, 100V	04-5659
C137	47µF, 10V	04-5666
C141	0.0047µF, 3kV	04-5547
C241	1µF, 35V	04-5656
C242	68µF, 6.3V	04-5654
C243	0.1µF, 50V	04-5663
C251	68µF, 6.3V	04-5654
•	**TRANSISTORS**	
Q101	2N7002L	05-5840
Q141	MMBT3904T	05-5841
Q211	2N7002L	05-5840
Q212	MMBT4403LT	05-5842
Q241	MJD210	05-5843

Ref. No.	Description	Part No.
•	**INTEGRATED CIRCUITS**	
U001	CD74HC4538M	06-6297
U011	TLC372ID	06-6290
U021	CA3096M	06-6288
U111	N87C51FC PLCC	06-6303
U121	LM285M-2.5	06-6291
U122	X24C02S8I	06-6299
U131	LM358D	06-6312
U231	LT1073CS8-5	05-5852
*	SOCKET 44P	06-6293
•	**DIODES**	
CR021	MMBD7000LT1	07-6355
CR031	GI250-2	07-6266
CR041-CR044	GI250-2	07-6266
CR231	CXSH-4 EB33	07-6358
CR241	MMBD914L	07-6353
CR242	CXSH-4 EB33	07-6358
•	**RESISTORS**	
R001	100k, 1/8W, 1%	12-7834
R002	10k TRIMMER	09-6921
R011-R012	10k, 1/8W, 1%	12-7839
R013	1k, 1/8W, 1%	12-7832
R014	10k, 1/8W, 1%	12-7839
R015	100k, 1/8W, 1%	12-7834
R021	1 MEG	10-7028
R022	392k, 1/8W, 1%	12-7841
R023	10k, 1/8W, 1%	12-7839
R024-R025	4.75k, 1/8W, 1%	12-7858
R026	8.25k, 1/8W, 1%	12-7838
R027	1 MEG TRIMMER	09-6906
R031	4.7 MEG	10-7030
R032	1 MEG	10-7028
R033-R034	1G	12-7686
R111-R113	2.1k, 1/8W, 1%	12-7843
R121	100, 1/8W, 1%	12-7840
R122	6.81k, 1%	12-7857
R131-R132	1 MEG, 1%	12-7844
R133	750k, 1%	12-7882
R134	1 MEG, 1%	12-7844
R135	82.5k, 1%	12-7849
R136	10k, 1/8W, 1%	12-7839
R141	22.1k, 1/8W, 1%	12-7843
R211	2.21k, 1/8W, 1%	12-7835
R231	100, 1/8W, 1%	12-7840
R241	1k, 1/8W, 1%	12-7832
R242	200 OHM, 1/8W,1%	12-7846

Ref. No.	Description	Part No.
• **CRYSTALS**		
Y221	MICRO X-TAL-6.144 MHZ	01-5262
• **INDUCTORS**		
L231	CTX100-2	21-9740
• **TRANSFORMERS**		
T101	AUDIO	4275-083
T141	L8050	40-0902
• **MISCELLANEOUS**		
P1	CONN-1-640456-2 MTA100	13-8061
P2	CONN-1-640456-3 MTA100	13-8100
P3	CONN-640456-6 MTA100	13-8095
P4	CONN-640456-2 MTA100	13-8073
P5	CONN-1-640456-2 MTA100	13-8061

Calibration Board, Drawing 408 x 127

Ref. No.	Description	Part No.
BOARD	Assembled Calibration	5408-148
• **RESISTORS**		
R110-R112	1 MEG TRIMMER	09-6814
R113-R114	100k TRIMMER	09-6813
R115	1 MEG, 1/3W, 5%	12-7751
R116	1k, 1/3W, 5%	12-7750
R118	10k, 1/3W, 5%	12-7748
R119	1 MEG, 1/3W, 5%	12-7751
R120	1k, 1/3W, 5%	12-7750
R121	10k, 1/3W, 5%	12-7748
R122	1 MEG, 1/3W, 5%	12-7751
• **CONNECTORS**		
P7	CONN-640456-8 MTA100	13-8039

Display Board, Drawing 408 x 79

Ref. No.	Description	Part No.
BOARD	Completely Assembled Display	5408-091
• **CAPACITORS**		
C012	27pF, 100V	04-5658
C113	47pF, 100V	04-5660
• **INTEGRATED CIRCUITS**		
U111	AY0438-I/L	06-6358
U114	SP4422N	06-6399
U211	AY0438-I/L	06-6358
• **RESISTORS**		
R001	10k, 1/8W, 1%	12-7839
R002	8.25k, 1/8W, 1%	12-7838
R003-R004	10k, 1/8W, 1%	12-7839
R121	10k, 1/8W, 1%	12-7839
• **INDUCTORS**		
L001-L002	20mH, 70 OHM	21-9792
L011-L012	20mH, 70 OHM	21-9792
• **MISCELLANEOUS**		
*	CONN-640456-8 MTA100	13-8039
DS111	Backlight-EL QUANTEX	07-6382
DSP1	LCD-8246-365-4E1	07-6383

Ref. No.	Description	Part No.
	Switch Board, Drawing No. 408 x 45	
BOARD	Assembled Switch	5408-052
•	**CAPACITORS**	
C1-C2	4.7µF, 10V, DT	04-5578
C3-C4	10µF, 20V, DT	04-5592
C5	4.7µF, 10V, DT	04-5578
C6	100µF, 10V	04-5576
•	**INTEGRATED CIRCUITS**	
U1	MAX220EPE	06-6359
•	**SWITCHES**	
S1	350134GSK	08-6721
S2-S4	3CTH9 PB	08-6716
•	**RESISTORS**	
R1-R2	22k, 1/4W, 5%	10-7070
•	**MISCELLANEOUS**	
P6	CONN-1-640456-3 MTA100	13-8100
P10	CONN-208006-2	13-8451
	Chassis Wiring Diagram, Drawing No. 408 X 131	
•	**AUDIO**	
DS1	UNIMORPH	21-9251
•	**CONNECTOR**	
J1	CONN-1-640442-2 MTA100	13-8407
J2	CONN-1-640442-3 MTA100	13-8138
J3	CONN-640442-6 MTA100	13-8171
J4	CONN-640442-2 MTA100	13-8178
J5	CONN-1-640442-2 MTA100	13-8407
J6	CONN-1-640442-3 MTA100	13-8138
J7-J8	CONN-640442-8 MTA100	13-8184

Ref. No.	Description	Part No.
J9	Series "C" -UG706/U13-7751	
J10	JACK-09-9011-1-4193	18-9080
P10	Handle Pin	7408-055
•	**SWITCHES**	
S1	30-1-PB GRAYHILL	08-6517
S3-S4	7101-SYZ-QE C&K	08-6511
S5	30-1-PB GRAYHILL	08-6517
S6	PA-600-210	08-6501
S7	MPS-103F	08-6699
*	Switch Cap	08-6698
S8	MTL-306D Toggle	08-6777
•	**BATTERY**	
B1-B2	"D" Duracell Battery	21-9313
•	**RESISTORS**	
R1	10 M, 1/4W, 5%	10-7031
•	**MISCELLANEOUS**	
*	Model 2241 Switch Board Add On	4408-053
*	Model 2240 Digital Bezel Assembly	4408-020
*	Bezel Back	7408-025
*	Bezel Back Gasket	7408-026
*	Portable Battery Contact Set	2001-042
*	Model 2241-2 Main Harness	8408-151
*	Portable Harness Can Wires	8363-462
*	Switch Board Harness	8408-027
*	Model 2241 Can Assy.	4408-081
2 EA.	Can Gasket	22-9773
*	Portable Knob	08-6613
*	Assembled Batt. Lid	9408-079
*	Portable Battery Gasket	7363-183
*	Portable Calibration Cover w/Screws	9363-200
*	Model 2241 Handle Assembly w/o Clip	4408-075
*	Cable-C under 25'	40-1004
*(OPTIONAL)	Source Holder Assy.	4062-166
*(OPTIONAL)	Check Source (1µCi Cs-137)	01-5196

DRAWINGS AND DIAGRAMS

Model 2241-2 Assembled View, Drawing 408 x 76
(Optional) Source Holder Assembly, Drawing 62 x 135

Main Circuit Board, Drawing 408 x 91
Main Circuit Board Component Layout, Drawing 408 x 92

Calibration Board, Drawing 408 x 127
Calibration Board Component Layout, Drawing 408 x 128

Display Board, Drawing 408 x 79
Display Board Component Layout, Drawing 408 x 80

Switch Board, Drawing 408 x 45
Switch Board Component Layout, Drawing 408 x 46

Wiring Diagram, Drawing 408 x 131

REV #	ALTERATIONS	DATE	BY
	VALID	12-31-96	TJR

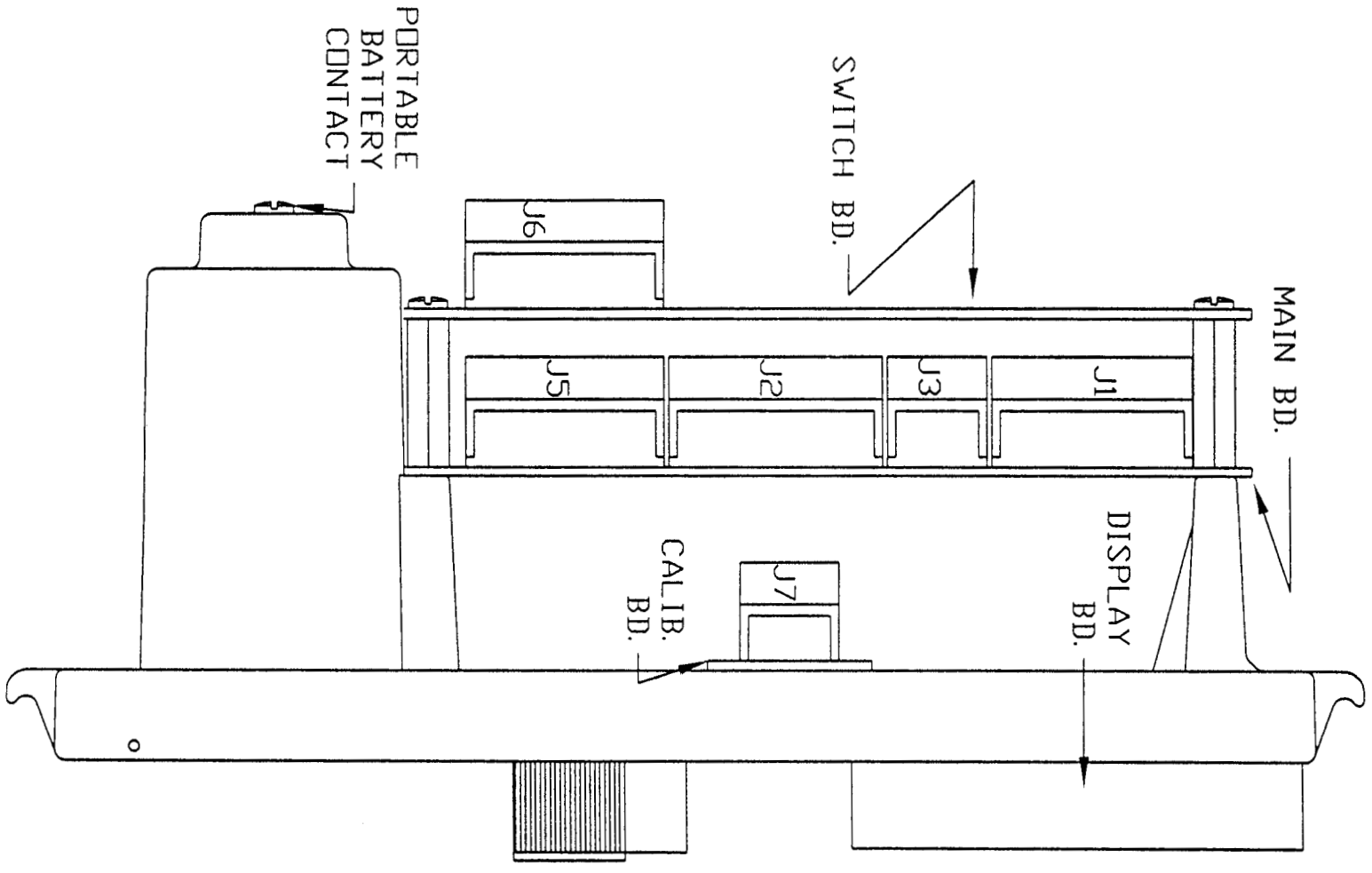

DWN	DATE	CHECKED	QC APPROVED
TJR	12-31-96	12-31-96 JGW	

MODEL: MODEL 2241-2

LUDLUM MEASUREMENTS, INC.
501 OAK STREET
SWEETWATER, TEXAS 79556

SERIES	SHEET
408	76

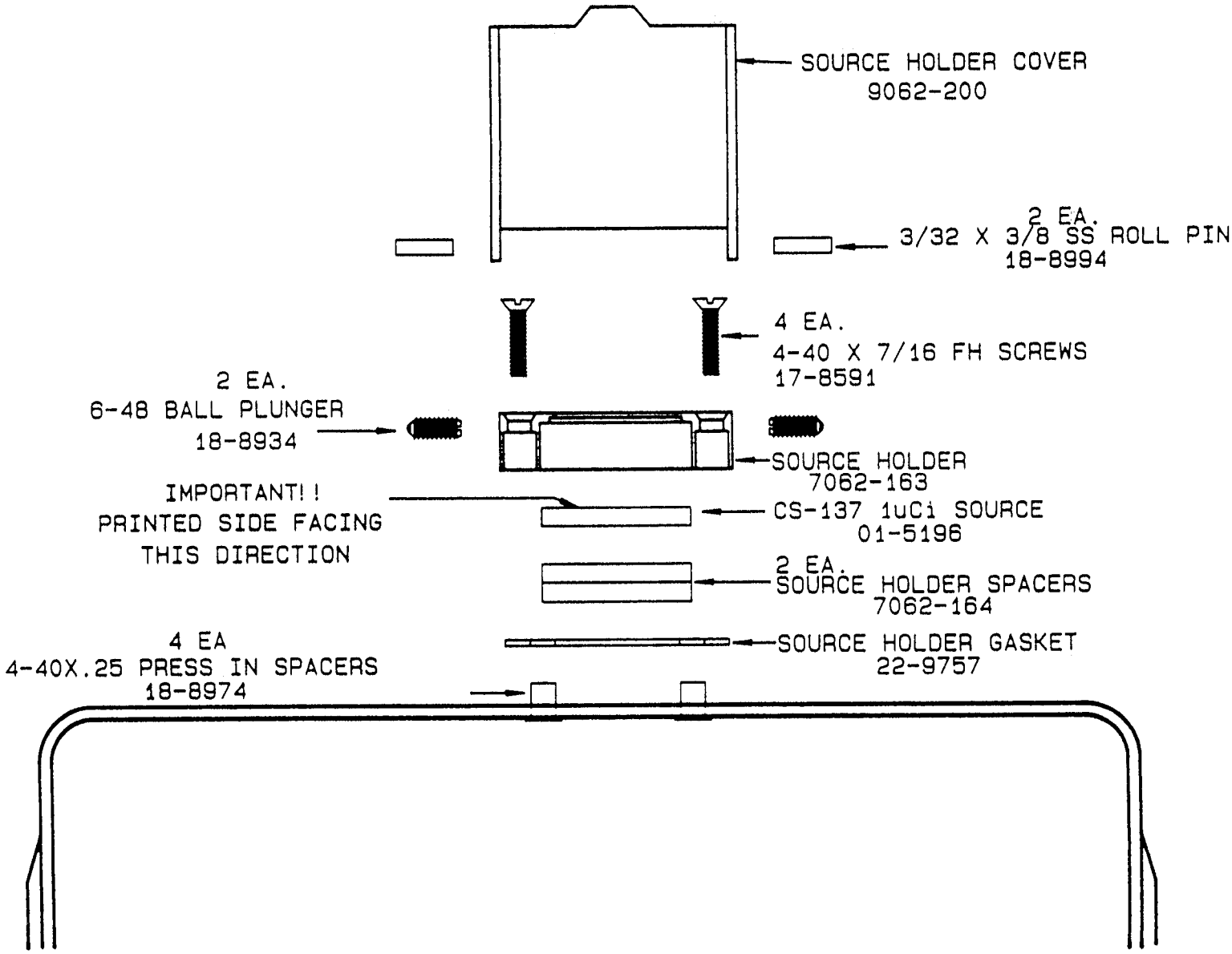

CHG	NO.					CHK	CHK	APP
DWN RQ	DATE 4-27-94	CHK DJ	DATE 7/14/94		APP PGB	DATE 7/14/94	
TOL: SHOP STD ☐ OTHER				SCALE: FULL OTHER ☐			
TITLE SOURCE HOLDER ASSEMBLY							
LUDLUM MEASUREMENTS, INC. 501 OAK STREET SWEETWATER, TEXAS 79556					SERIES 62		SHEET 135

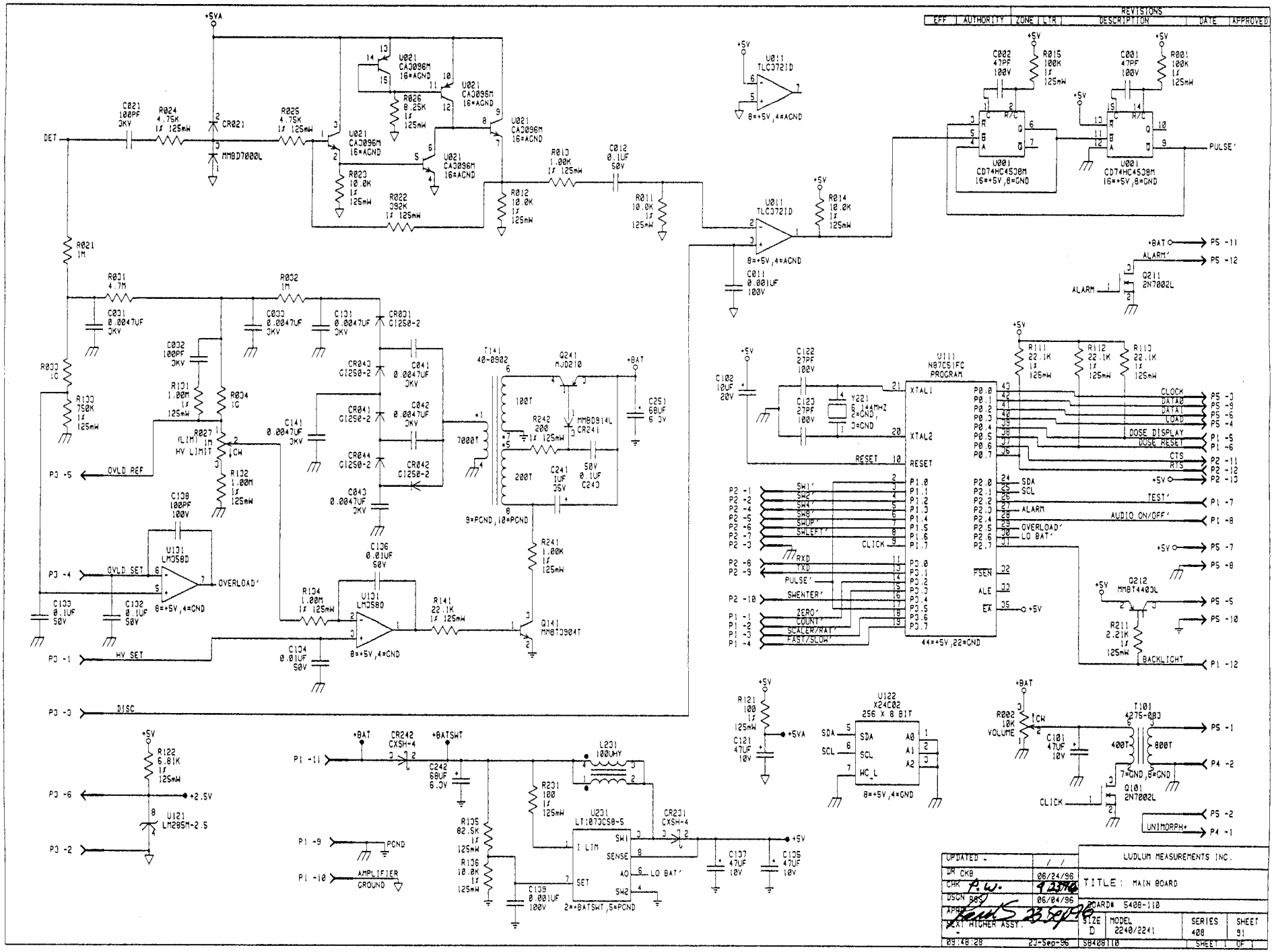
REVISIONS
EFF | AUTHORITY | ZONE | LTR | DESCRIPTION | DATE | APPROVED
DET
+5VA
C021 100PF 3KV
R024 4.75K 1% 125mW
R025 4.75K 1% 125mW
CR021 MMBD7000L
U021 CA3096M 16=AGND
R026 8.25K 1% 125mW
R023 10.0K 1% 125mW
R022 392K 1% 125mW
R013 1.00K 1% 125mW
R012 10.0K 1% 125mW
C012 0.1UF 50V
R011 10.0K 1% 125mW
U011 TLC3721D 8=+5V,4=AGND
C011 0.001UF 100V
R014 10.0K 1% 125mW
C002 47PF 100V
R015 100K 1% 125mW
C001 47PF 100V
R001 100K 1% 125mW
U001 CD74HC4538M 16=+5V,8=GND
PULSE'
+BAT
ALARM'
Q211 2N7002L
R021 1M
R031 4.7M
R032 1M
C031 0.0047UF 3KV
C033 0.0047UF 3KV
C131 0.0047UF 3KV
CR031 C1250-2
CR043 C1250-2
C041 0.0047UF 3KV
CR041 C1250-2
C042 0.0047UF 3KV
CR044 C1250-2
CR042 C1250-2
C043 0.0047UF 3KV
C032 100PF 3KV
R033 1G
R131 1.00M 1% 125mW
R034 1G
R027 1M (LIM) HV LIMIT
R032 1.00M 1% 125mW
R133 750K 1% 125mW
C141 0.0047UF 3KV
T141 40-0902
7000T
100T
200T
Q241 MJD210
R242 200 1% 125mW
MMBD914L CR241
C241 1UF 35V
50V 0.1UF C243
C251 68UF 6.3V
R241 1.00K 1% 125mW
C136 0.01UF 50V
C138 100PF 100V
U131 LM358D
OVLD SET
OVERLOAD'
8=+5V,4=GND
C133 0.1UF 50V
C132 0.1UF 50V
R134 1.00M 1% 125mW
C134 0.01UF 50V
R141 22.1K 1% 125mW
Q141 MMBT3904T
HV SET
OVLD REF
DISC
U111 N87C51FC PROGRAM
XTAL1
XTAL2
RESET
C102 10UF 20V
C122 27PF 100V
C123 27PF 100V
Y221 6.144MHZ 2=GND, 3=GND
R111 22.1K 1% 125mW
R112 22.1K 1% 125mW
R113 22.1K 1% 125mW
CLOCK
DATA0
DATA1
LOAD
DOSE DISPLAY
DOSE RESET
CTS
RTS
SDA
SCL
TEST'
ALARM
AUDIO ON/OFF'
OVERLOAD'
LO BAT'
SW1'
SW2'
SW3'
SW8'
SWUP'
SWLEFT'
CLICK
RXD
TXD
PULSE'
SWENTER'
ZERO'
COUNT'
SCALER/RAT'
FAST/SLOW'
PSEN
ALE
EA
44=+5V,22=GND
Q212 MMBT4403L
R211 2.21K 1% 125mW
BACKLIGHT
R122 6.81K 1% 125mW
U121 LM285M-2.5
+2.5V
PCND
AMPLIFIER GROUND
+BAT
CR242 CXSH-4
+BATSWT
C242 68UF 6.3V
L231 100UHY
R231 100 1% 125mW
U231 LT1073CS8-5
SW1
SENSE
AO
SW2
SET
LIM
2=+BATSWT,5=PCND
CR231 CXSH-4
C137 47UF 10V
C135 47UF 10V
R135 82.5K 1% 125mW
R136 10.0K 1% 125mW
C139 0.001UF 100V
R121 100 1% 125mW
C121 47UF 10V
U122 X24C02 256 X 8 BIT
SDA
SCL
WC_L
A0
A1
A2
8=+5V,4=GND
R202 10K VOLUME
C101 47UF 10V
T101 4275-083
400T
800T
7=GND,8=GND
Q101 2N7002L
UNIMORPH+
LUDLUM MEASUREMENTS INC.
TITLE: MAIN BOARD
BOARD# 5408-110
SIZE D
MODEL 2240/2241
SERIES 408
SHEET 91
09:48:28 23-Sep-96
S8408110

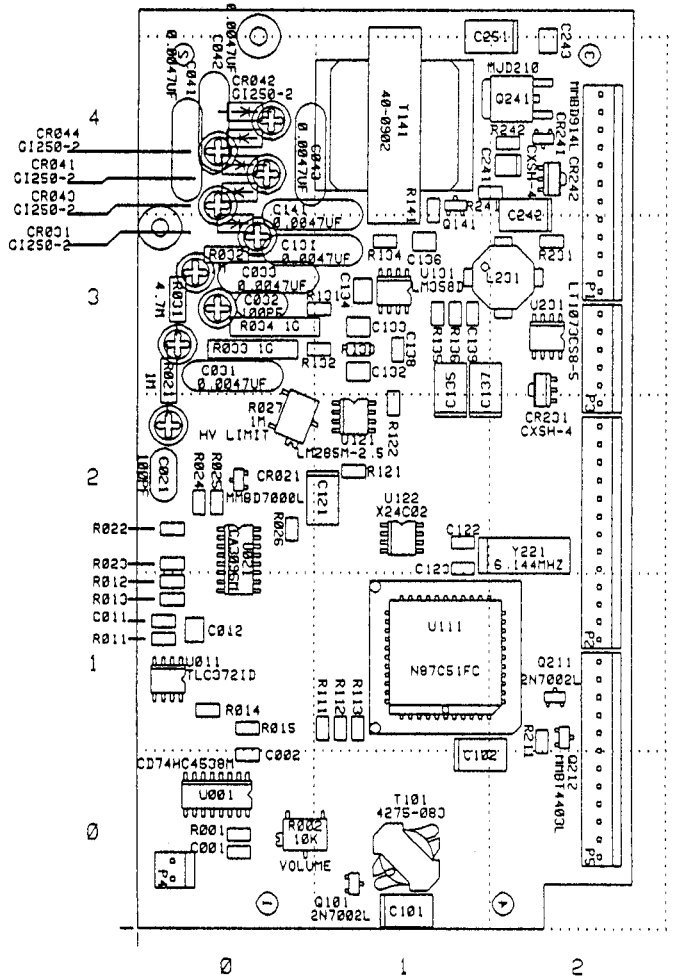

LUDLUM MEASUREMENTS INC. SWEETWATER, TX.				
DR CKB	06/24/96	TITLE: MAIN BOARD		
CHK RW.	9 12 96	BOARD# 5408-110		BS408110
DSGN RSS	06/04/96	MODEL 2240	SERIES 408	SHEET 92
APP Rod S 23 Sep 96		COMP ARTWORK ☐	SLDR ARTWORK ☐	
10:17:22	13-Sep-96	COMP OUTLINE ☒	SLDR OUTLINE ☐	
COMP PASTE ☐	COMP MASK ☐	SLDR PASTE ☐	SLDR MASK ☐	

REVISIONS						
EFF	AUTHORITY	ZONE	LTR	DESCRIPTION	DATE	APPROVED

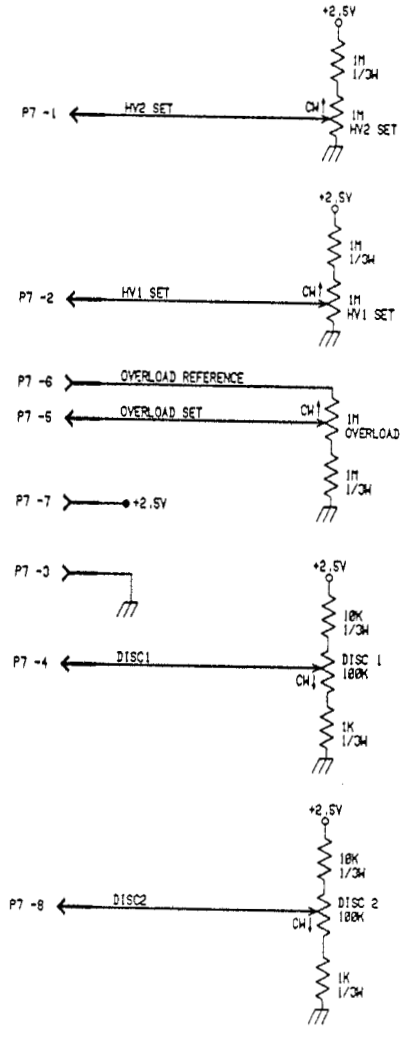

UPDATED	-		LUDLUM MEASUREMENTS INC.
DR	ACF	18-JAN-98	TITLE: CALIBRATION BOARD
CHK	RDS	4Feb98	
DSGN	RSS	09-JAN-98	BOARD# 5408-148
APPD	RSS	4Feb98	SIZE C / MODEL 2241-2 / SERIES 408 / SHEET 127
NEXT HIGHER ASSY. -			
11:28:24		12-Jan-98	5408148 SHEET OF 1

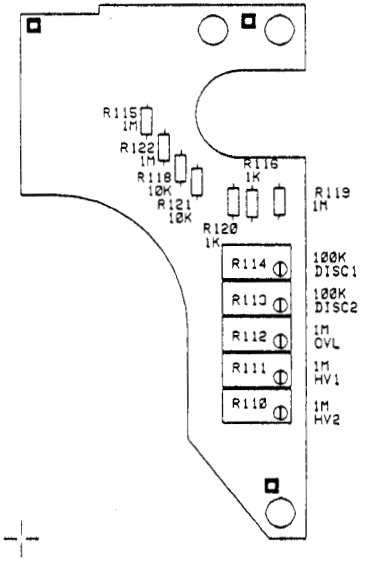

LUDLUM MEASUREMENTS INC. SWEETWATER, TX.				
DR ACF	12-JAN-98	TITLE: CALIBRATION BOARD		
CHK VGW	2-5-98	BOARD# 5408-148	8S408148	
DSGN RSS	09-JAN-98	MODEL 2241-2	SERIES 408	SHEET 128
APP SBS	5-Feb 98	COMP ARTWORK ☐	SLDR ARTWORK ☐	
16:07:18	5-Feb-98	COMP OUTLINE ☐	SLDR OUTLINE ☐	
COMP PASTE ☐	COMP MASK ☐	SLDR PASTE ☐	SLDR MASK ☐	

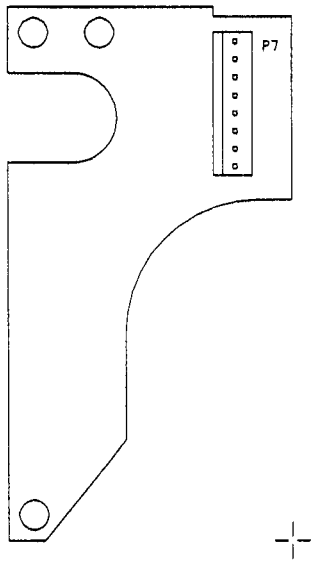

LUDLUM MEASUREMENTS INC. SWEETWATER, TX.				
DR ACF	12-JAN-98	TITLE: CALIBRATION BOARD		
CHK JGW	2-5-98	BOARD# 5408-148		
DSGN RSS	09-JAN-98	MODEL 2241-2	SERIES 408	SHEET 128
APP RSS	5-Feb98	COMP ARTWORK ☐	SLDR ARTWORK ☐	
		COMP OUTLINE ☐	SLDR OUTLINE ☒	
COMP PASTE ☐	COMP MASK ☐	SLDR PASTE ☐	SLDR MASK ☐	

REVISIONS						
EFF	AUTHORITY	ZONE	LTR	DESCRIPTION	DATE	APPROVED

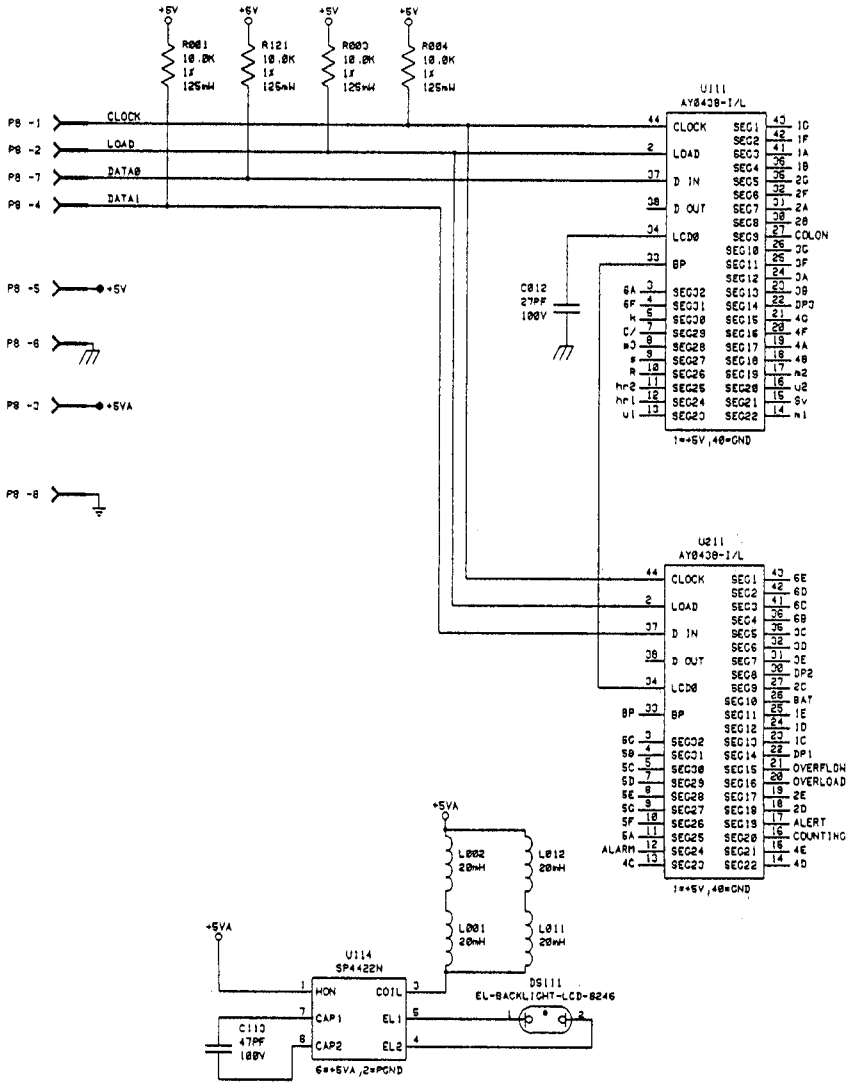

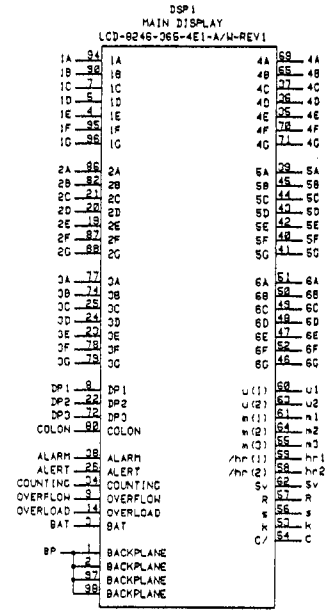

UPDATED -	/ /	LUDLUM MEASUREMENTS INC.	
DR CKB	02/01/96	TITLE: DISPLAY W/E.L.	
CHK P.W.	1.3.97		
DSGN RBG	01/12/96	BOARD# 5408-091	
APPD KDS	03JAN97		
NEXT HIGHER ASSY. -		SIZE D / MODEL 2240/2241	SERIES 408 / SHEET 79
13:18:34	3-Jan-97	5840809!	SHEET 1 OF 1

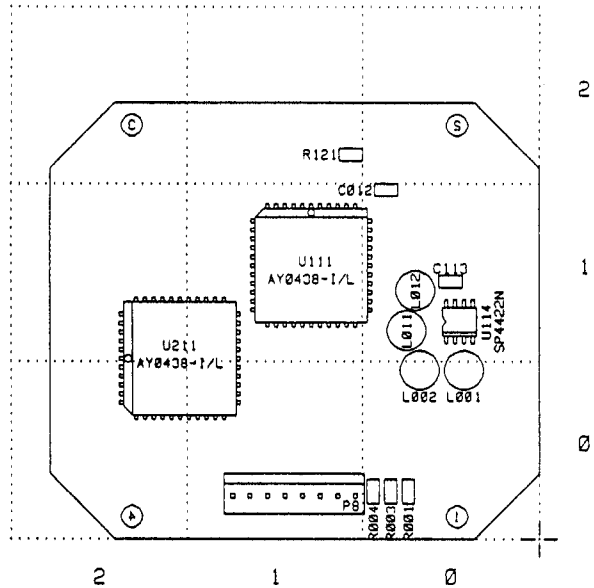

LUDLUM MEASUREMENTS INC. SWEETWATER, TX.				
DR CKB	01/15/96	TITLE: DISPLAY BOARD		
CHK R.C.	9/24/96	BOARD# 5408-091		BS408091
DSGN RSS	01/12/96	MODEL 2240/2241	SERIES 408	SHEET 80
APPROVED	2-8-96	COMP ARTWORK ☐	SLDR ARTWORK ☐	
13:42:00	02-FEB-96	COMP OUTLINE ☐	SLDR OUTLINE ☒	
COMP PASTE ☐	COMP MASK ☐	SLDR PASTE ☐	SLDR MASK ☐	

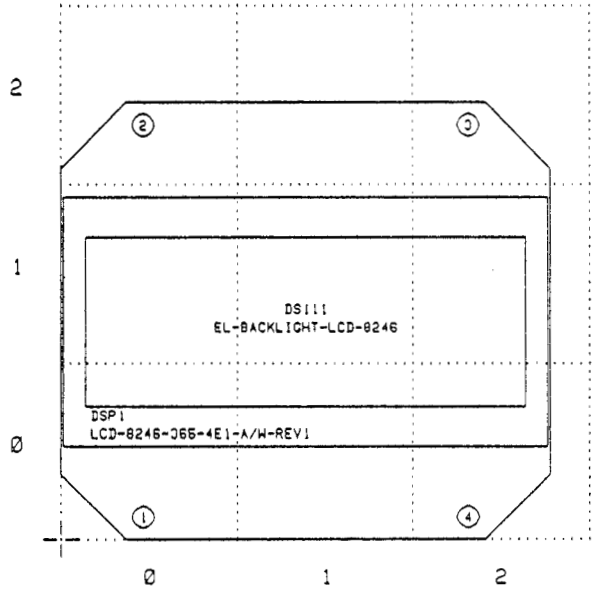

LUDLUM MEASUREMENTS INC. SWEETWATER, TX.					
DR	CKB	01/15/96	TITLE: DISPLAY BOARD W/E.L.		
CHK	R.C.	9/24/96	BOARD# 5400-091		BS400091
DSGN	RSS	01/12/96	MODEL2240/2241	SERIES 400	SHEET 80
APP		9/24/96	COMP ARTWORK ☐		SLDR ARTWORK ☐
15:20:09		24-Sep-96	COMP OUTLINE ☒		SLDR OUTLINE ☐
COMP PASTE ☐		COMP MASK ☐	SLDR PASTE ☐		SLDR MASK ☐

EFF	AUTHORITY	ZONE	LTR	REVISIONS DESCRIPTION	DATE	APPROVED

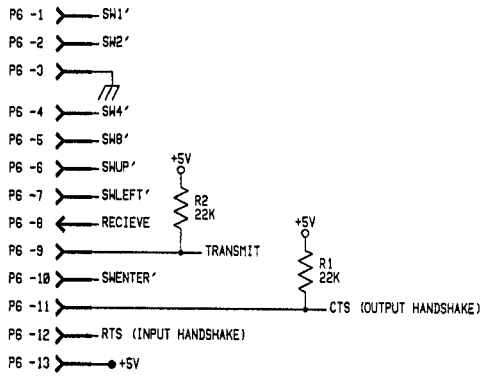

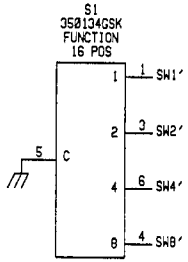

POS	FUNCTION
0	NORMAL OPERATION
1	DEAD TIME (us)
2	CALIBRATION CONSTANT
3	DISPLAY UNITS
4	TIMEBASE: CPS, CPM
5	AUDIO DIVIDE BY
6	RESPONSE TIME
7	RATEMETER ALARM / ALERT
8	SCALER ALARM / COUNT TIME
9	NOT USED
A	DETECTOR SETUP NUMBER
B	LCD BACKLIGHT ON TIME
C	SET MINIMUM DISPLAY
D	RS-232 DATA DUMP MODE
E	RS-232 DETECTOR SETUP MODE
F	RS-232 BAUD RATE

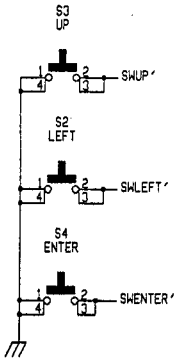

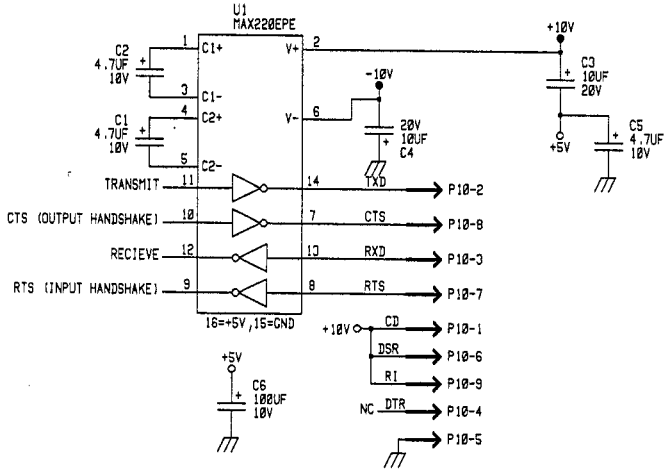

UPDATED CKB	21-DEC-00	LUDLUM MEASUREMENTS INC.
DR CKB	06/24/96	TITLE: SWITCH BOARD
CHK ESS	12-21-00	
DSGN LL	3/17/93	BOARD# S408-052
APPD RDS	21Dec00	SIZE C / MODEL 2241 / SERIES 408 / SHEET 45
NEXT HIGHER ASSY.		
09:54:25	21-Dec-00	SB408052 / SHEET 1 OF 1

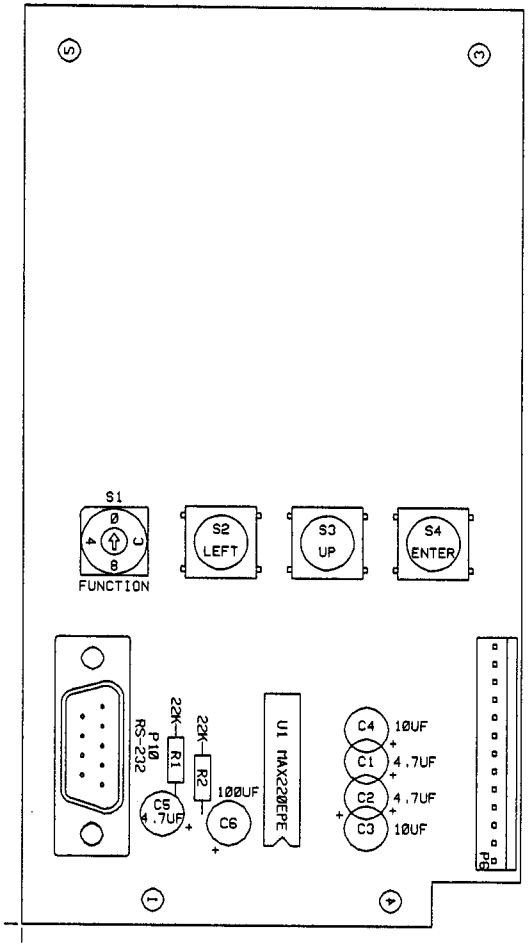

LUDLUM MEASUREMENTS INC. SWEETWATER, TX.			
DR CKB	06/24/96	TITLE: SWITCH BOARD	
CHK RSS	12-21-00	BOARD: 5408-052	
DSGN LL	03/16/94	MODEL: 2241	
APP RDS	21 Dec 00	FILENAME: BS408052	
COMPONENT	SOLDER	09:52:54	21-Dec-00
		REVISION	SERIES / SHEET
OUTLINE	OUTLINE	1.0	408 / 46

EFF	AUTHORITY	ZONE	LTR	REVISIONS DESCRIPTION	DATE	APPROVED

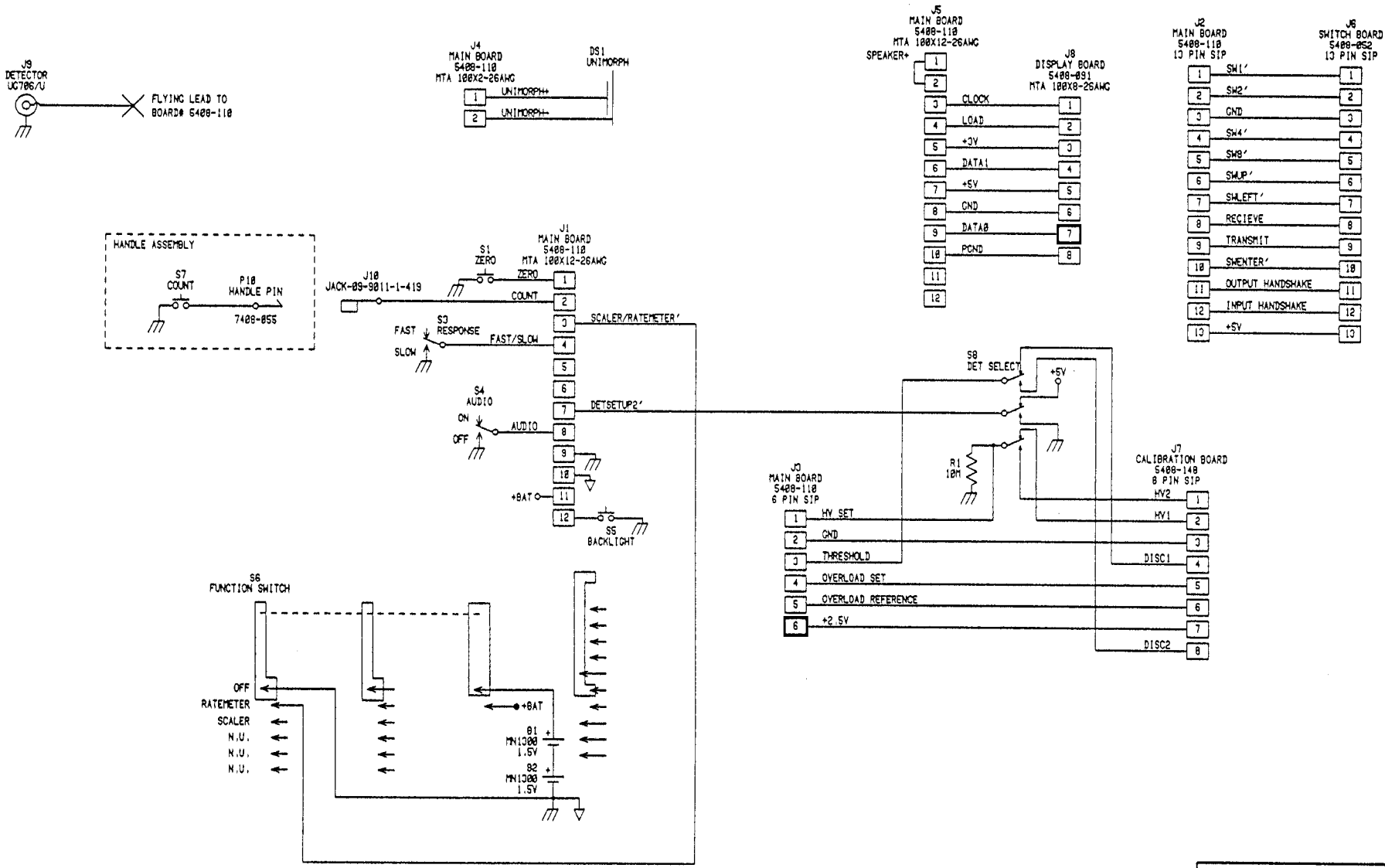

UPDATED	-	
DR ACF		10-JAN-98
CHK RSS		4 Feb 98
DSGN RSS		09-JAN-98
APPD. JGW		2-4-98
NEXT HIGHER ASSY.		
08:24:58		4-Feb-98

LUDLUM MEASUREMENTS INC.

TITLE: WIRING DIAGRAM

BOARD# 408-148

SIZE	MODEL	SERIES	SHEET
C	2241-2	408	101

W408149 SHEET OF 1

BASIC REMEDIATION COMPANY
STANDARD OPERATING PROCEDURES
BMI COMMON AREAS
CLARK COUNTY, NEVADA

SOP-39

PHOTOIONIZATION DETECTOR (PID) SCREENING PROCEDURE

STANDARD OPERATING PROCEDURES

SOP-39
PHOTOIONIZATION DETECTOR (PID) SCREENING PROCEDURE

TABLE OF CONTENTS

Section **Page**

1.0 INTRODUCTION 1

2.0 DEFINITIONS 2

3.0 RESPONSIBILITIES 2

4.0 GUIDELINES 3
- 4.1 Interferences and Limitations 3
- 4.2 Calibration 4
- 4.3 Field Operation 4
- 4.4 Post Operation 5
- 4.5 Maintenance 5

LIST OF ATTACHMENTS

Attachment 1 Ionization Potentials for Volatile Site-Related Chemicals

DISCLAIMER

THE FOLLOWING STANDARD OPERATING PROCEDURE PROVIDES GENERAL GUIDANCE FOR BRC CONTRACTORS FOR TECHNICAL ISSUES ADDRESSED DURING ENVIRONMENTAL SITE INVESTIGATION AND REMEDIATION ACTIVITIES. IT IS NOTED, HOWEVER, THAT EACH SITE IS UNIQUE AND THESE GUIDELINES ARE NOT A SUBSTITUTE FOR COMMON SENSE AND GOOD MANAGEMENT PRACTICES BASED ON PROFESSIONAL TRAINING AND EXPERIENCE. IN ADDITION, INDIVIDUAL CONTRACT TERMS MAY AFFECT THE IMPLEMENTATION OF THIS STANDARD OPERATING PROCEDURE. BRC CONTRACTORS RESERVE THE UNRESTRICTED RIGHT TO CHANGE, MODIFY OR NOT APPLY THESE GUIDELINES IN THEIR SOLE, COMPLETE, AND UNRESTRICTED DISCRETION TO MEET CERTAIN CIRCUMSTANCES, CONTRACTUAL REQUIREMENTS, SITE CONDITIONS, OR JOB REQUIREMENTS.

1.0 INTRODUCTION

The purpose of this Standard Operating Procedure (SOP) is to describe the procedure for using a photoionization detector (PID). The PID is a portable, nonspecific, vapor/gas detector employing the principle of photoionization to detect a variety of chemical compounds in air. A PID is capable of detecting and measuring real-time concentrations of many organic and inorganic vapors in air. A PID is similar to a flame ionization detector (FID) in application; however, the PID has somewhat broader capabilities in that it can detect certain inorganic vapors. Conversely, the PID is unable to respond to certain low molecular weight hydrocarbons, such as methane and ethane, which are readily detected by FID instruments.

The PID employs the principle of photoionization. The analyzer will respond to most vapors that have an ionization potential less than or equal to that supplied by the ionization source, which is an ultraviolet (UV) lamp. Photoionization occurs when an atom or molecule absorbs a photon of sufficient energy to release an electron and form a positive ion. This will occur when the ionization potential of the molecule in electron volts (eV) is less than the energy of the photon. The sensor is housed in a probe and consists of a sealed ultraviolet light source that emits photons with an energy level high enough to ionize many trace organics, but not enough to ionize the major components of air (e.g., nitrogen, oxygen, carbon dioxide). The ionization chamber exposed to the light source contains a pair of electrodes, one a bias electrode, and the second the collector electrode. When a positive potential is applied to the bias electrode, an electro-magnetic field is created in the chamber. Ions formed by the adsorption of photons are driven to the collector electrode. The current produced is then measured and the corresponding concentration displayed on a meter, directly, in units above background. Several probes are available for the PID, each having a different eV lamp and a different ionization potential. The selection of the appropriate probe is essential in obtaining useful field results. Though it can be calibrated to a particular compound, the instrument cannot distinguish between detectable compounds in a mixture of gases and, therefore, indicates an integrated response to the mixture.

Three probes, each containing a different UV light source, are available for use with the PID instrument are 9.5, 10.2, and 11.7 eV. All three detect many aromatic and large molecular hydrocarbons. The 10.2 eV and 11.7 eV probes, in addition, detect some smaller organic molecules and some halogenated hydrocarbons. The 10.2 eV probe is the most useful for environmental response work, as it is more durable than the 11.7 eV probe and detects more compounds than the 9.5 eV probe. Gases with ionization potentials near to or less than that of the lamp will be ionized. These gases will thus be detected and measured by the analyzer. Gases

with ionization potentials higher than that of the lamp will not be detected. Ionization potentials for volatile site-related chemicals are given in Attachment 1.

Typically for the project two PIDs will be used in the field. One PID will employ a 10.2 eV probe, and the other will employ a 11.7 eV probe.

2.0 DEFINITIONS

None.

3.0 RESPONSIBILITIES

The following is a general description of responsibilities related to calibration and operating procedures for the PID used for field monitoring.

The **Project Manager** or **Task Leader** (a qualified Nevada Certified Environmental Manager [C.E.M.]) is responsible for identifying the appropriate PID equipment necessary to adequately define the parameters.

The **Health and Safety Coordinator** will work with the Project Manager in identifying the appropriate safety equipment. The Health and Safety Coordinator will also perform audits to observe field personnel using the PID. If the PID is not being used properly, the Health and Safety Coordinator will provide the necessary training and resources.

The **Field Team Leader** (FTL) (a qualified Nevada C.E.M.) is responsible for including a refresher course on the proper use, calibration, and maintenance of the PID to be used on the project as part of the kick-off meeting. The FTL will ensure on a daily basis that all field team members properly use the PID through the duration of the project.

Field team members are to follow the procedure listed below. The field team members will be responsible for carefully reviewing instruction manuals for the PID to be used on the project. All field team members will be required to sign a form indicating that they know how to properly operate the PID that will be used on their project.

This SOP provides a general description of the calibration and operating procedures defined in the manufacturer's instruction manual, which accompanies each PID. This SOP should be used as a general reference and the manufacturer's instruction manual should be followed at all times by field team members when using the PID.

Other SOPs that reference use of PIDs are SOP-3 (Groundwater Monitoring Well Development), SOP-13 (Operating and Calibration Procedures - Field Equipment), SOP-14 (Field Documentation), SOP-17 (Soil Logging), SOP-18 (Soil Sampling for VOCs Using EnCore™ Samplers), SOP-30 (Field Analytical Procedure), and SOP-37 (Active Soil Gas Investigation).

4.0 GUIDELINES

4.1 Interferences and Limitations

The following identifies some of the potential interferences and limitations with the PID instrument:

1. The PID is a nonspecific total vapor detector. It cannot be used to identify unknown substances; it can only roughly quantify them.

2. Certain toxic gases and vapors, such as hydrogen cyanide, have high ionization potentials and cannot be detected with a PID.

3. It does not detect a compound if the probe used has a lower energy level than the compound's ionization potential, and response may change when gases are mixed.

4. Readings can be reported only relative to the calibration standard used.

5. Total concentrations are relative to the calibration gas used. Therefore, contaminant concentrations cannot be identified. Also, while the instrument scale reads 0 to 2,000 parts per million (ppm), response is linear to the calibration gas.

6. Electrical power lines or power transformers may cause interference with the instrument and thus cause measurement errors. Static voltage sources such as power lines, radio transmissions, or transformers may also interfere with measurements.

7. High winds and high humidity will affect measurement readings. The PID instrument may become unusable under foggy or humid conditions. An indication of this is the needle dropping below zero, or a slow constant climb on the read-out dial.

8. The lamp window must be periodically cleaned to ensure ionization of the new compounds by the probe (i.e., new air contaminants).

9. This instrument is not to be exposed to precipitation (rain). The units are not designed for this service.

10. Do not use this instrument for head space analysis where liquids can inadvertently be drawn into the probe.

11. Transport of calibration gas cylinders by passenger and cargo aircraft must comply with International Air Transport Association (IATA) Dangerous Goods Regulations or the U.S.

Code of Federal Regulations, 49 CFR Parts 100-177. A typical calibration gas included with a PID is isobutylene. It is classified as a non-flammable gas, UN #1556 and the proper shipping name is Compressed Gas. It must be shipped by cargo aircraft only.

4.2 Calibration

There are two steps to the calibration: fresh air and a span calibration to a standard gas. See the operation manual for the specific model being used. Calibration events will be documented in a logbook. Documentation will include the date inspected, person responsible for calibrating the instrument, the instrument number, calibration results, calibration gas information (source, type, concentration).

4.3 Field Operation

1. Unpack the instrument carefully. Unclamp the fasteners on the instrument cover from the main readout assembly. Remove the inner lid from the instrument cover by pulling out the two one-quarter turn fasteners. Remove the probe, handle, and cable from the instrument cover. Attach the handle and probe extension to the probe.

2. Allow the temperature of the unit to equilibrate to its surrounding. This should take about five minutes.

3. All readings are to be recorded in the site logbook. Readings should be recorded, following background readings, as "units above background," not ppm.

4. As with any field instrument, accurate results depend on the operator being completely familiar with the operator's manual. The instructions in the operating manual should be followed explicitly in order to obtain accurate results.

5. Position the probe assembly close to the area to be monitored because the low sampling rate allows for only very localized readings. Under no circumstances should the probe tip assembly be immersed in fluid.

6. While taking care to prevent the PID from being exposed to excessive moisture, dirt, or contamination, monitor the work activity as specified in the site Health and Safety Plan. The PID survey should be conducted at a slow to moderate rate of speed and the intake assembly (the probe) slowly swept from side to side. There is a three to five second delay in read-out depending upon the instruments sensitivity to the contaminant.

7. During drilling activities, PID monitoring is performed at regular intervals downhole, at the headspace, and in the breathing zone. In addition, where elevated organic vapor levels are encountered, monitoring may be performed in the breathing zone during actual drilling. When the activity being monitored is other than drilling, readings should emphasize breathing zone conditions.

8. When the activity is completed or at the end of the day, carefully clean the outside of the PID with a damp disposable towel to remove any visible dirt.

4.4 Post Operation

1. Turn instrument to OFF.

2. Return the PID to a secure area and check the calibration before charging. Connect the instrument to charger and plug in the charger. The probe must be connected to the readout unit to ensure that the unit accepts a charge.

3. Complete logbook entries, verifying the accuracy of entries and signing/initialing all pages. Following completion of a series of "0" readings, verify the instrument is working.

4. Check the equipment, repair or replace damaged equipment, and charge the batteries.

4.5 Maintenance

1. Perform routine calibration prior to each use and at the end of each day.

2. Factory calibrate yearly, when malfunctioning, when the span setting exceeds the maximum span setting for the probe in use, and after the UV light source has been replaced.

3. Clean the main readout assembly after each use. Thoroughly decontaminate the instrument at the completion of the project.

4. Recharge the battery daily.

5. Care should be taken when sampling over solids and liquids so that it is not drawn into the instrument.

ATTACHMENT 1

IONIZATION POTENTIALS FOR VOLATILE SITE-RELATED CHEMICALS

Ionization Potentials for Volatile Site-Related Chemicals

Parameter of Interest	Analytical Method	Compound List	CAS Number	Ionization Potential (eV)
Ions	**EPA 300.0**	Bromide	24959-67-9	n.p.
		Bromine	7726-95-6	10.52
		Chlorate	14866-68-3	n.p.
		Chloride	16887-00-6	n.p.
		Chlorine	7782-50-5	11.48
		Chlorite	14998-27-7	n.p.
		Fluoride	16984-48-8	n.p.
		Nitrate (as N)	14797-55-8	n.p.
		Nitrite (as N)	14797-65-0	n.p.
		Orthophosphate	14265-44-2	n.p.
		Sulfate	14808-79-8	n.p.
	EPA 377.1	Sulfite	14265-45-3	n.p.
	EPA 314.0	Perchlorate	14797-73-0	n.p.
Dissolved Gases	**RSK 175**	Ethane	74-84-0	11.52
		Ethylene	74-85-1	10.51
		Methane	74-82-8	12.61
General Chemistry	**EPA 350.2**	Ammonia	7664-41-7	10.07
	EPA 335.1/335.2	Cyanide	57-12-5	13.6
	EPA 345.1	Iodine	7553-56-2	9.31
Aldehydes	**EPA 8315A**	Acetaldehyde	75-07-0	10.23
		Chloroacetaldehyde	107-20-0	10.61
		Dichloroacetaldehyde	79-02-7	10.5
		Formaldehyde	50-00-0	10.88
		Trichloroacetaldehyde	75-87-6	10.9
Volatile Organic Compounds	**EPA 8260B**	1,1,1,2-Tetrachloroethane	630-20-6	11.1
		1,1,1-Trichloroethane	71-55-6	11.25
		1,1,2,2-Tetrachloroethane	79-34-5	11.10
		1,1,2-Trichloroethane	79-00-5	11.0
		1,1-Dichloroethane	75-34-3	11.04
		1,1-Dichloroethene	75-35-4	9.81
		1,1-Dichloropropene	563-58-6	n.p.
		1,2,3-Trichlorobenzene	87-61-6	9.18
		1,2,3-Trichloropropane	96-18-4	n.p.
		1,2,4-Trichlorobenzene	120-82-1	9.04
		1,2,4-Trimethylbenzene	95-63-6	8.27
		1,2-Dichlorobenzene	95-50-1	9.06
		1,2-Dichloroethane	107-06-2	11.07
		1,2-Dichloropropane	78-87-5	10.8
		1,3,5-Trichlorobenzene	108-70-3	9.3
		1,3,5-Trimethylbenzene	108-67-8	8.4
		1,3-Dichlorobenzene	541-73-1	9.1
		1,3-Dichloropropene	542-75-6	n.p.

Ionization Potentials for Volatile Site-Related Chemicals

Parameter of Interest	Analytical Method	Compound List	CAS Number	Ionization Potential (eV)
Volatile Organic Compounds (continued)	**EPA 8260B**	1,3-Dichloropropane	142-28-9	10.89
		1,4-Dichlorobenzene	106-46-7	8.92
		2,2-Dichloropropane	594-20-7	n.p.
		2,2-Dimethylpentane	590-35-2	n.p.
		2,2,3-Trimethylbutane	464-06-2	n.p.
		2,3-Dimethylpentane	565-59-3	n.p.
		2,4-Dimethylpentane	108-08-7	n.p.
		2-Chlorotoluene	95-49-8	8.72
		2-Hexanone	591-78-6	9.35
		2-Methylhexane	591-76-4	n.p.
		2-Nitropropane	79-46-9	10.74
		3,3-Dimethylpentane	562-49-2	n.p.
		3-Ethylpentane	617-78-7	n.p.
		3-Methylhexane	589-34-4	n.p.
		4-Chlorotoluene	106-43-4	8.69
		4-Methyl-2-pentanone (MIBK)	108-10-1	9.3
		Acetone	67-64-1	9.7
		Acetonitrile	75-05-8	12.2
		Benzene	71-43-2	9.24
		Bromobenzene	108-86-1	9.0
		Bromodichloromethane	75-27-4	10.6
		Bromoform	75-25-2	10.5
		Bromomethane	74-83-9	10.54
		Carbon disulfide	75-15-0	10.07
		Carbon tetrachloride	56-23-5	11.47
		Chlorobenzene	108-90-7	9.07
		Chlorobromomethane	74-97-5	10.77
		Chloroethane	75-00-3	10.98
		Chloroform	67-66-3	11.37
		Chloromethane	74-87-3	11.26
		cis-1,2-Dichloroethene	156-59-2	9.66
		cis-1,3-Dichloropropene	10061-01-5	n.p.
		Cymene (Isopropyltoluene)	99-87-6	8.29
		Dibromochloroethane	73506-94-2	n.p.
		Dibromochloromethane	124-48-1	10.59
		Dibromochloropropane	96-12-8	n.p.
		Dibromomethane	74-95-3	10.41
		Dichloromethane (Methylene chloride)	75-09-2	11.33
		Dimethyldisulfide	624-92-0	7.4
		Ethanol	64-17-5	10.48
		Ethylbenzene	100-41-4	8.77
		Freon-11	75-69-4	11.68

Ionization Potentials for Volatile Site-Related Chemicals

Parameter of Interest	Analytical Method	Compound List	CAS Number	Ionization Potential (eV)
Volatile Organic Compounds (continued)	**EPA 8260B**	Freon-113	76-13-1	11.99
		Freon-12	75-71-8	12.26
		Heptane	142-82-5	9.93
		Isoheptane	31394-54-4	n.p.
		Isopropylbenzene	98-82-8	8.73
		m-Xylene	108-38-3	8.55
		Methyl ethyl ketone (2-Butanone)	78-93-3	9.52
		Methyl iodide	74-88-4	9.54
		MTBE (Methyl tert-butyl ether)	1634-04-4	9.24
		n-Butyl benzene	104-51-8	8.69
		n-Propylbenzene	103-65-1	8.71
		Nonanal	124-19-6	n.p.
		o-Xylene	95-47-6	8.56
		p-Xylene	106-42-3	8.44
		sec-Butylbenzene	135-98-8	8.68
		Styrene	100-42-5	8.46
		tert-Butyl benzene	98-06-6	8.68
		Tetrachloroethene	127-18-4	9.33
		Toluene	108-88-3	8.83
		trans-1,2-Dichloroethene	156-60-5	9.64
		trans-1,3-Dichloropropene	10061-02-6	n.p.
		Trichloroethene	79-01-6	9.46
		Vinyl acetate	108-05-4	9.2
		Vinyl chloride	75-01-4	9.99
		Tentatively Identified Compounds (TICs)	--	--
Semi-Volatile Organic Compounds	**EPA 8270C**	1,2,4,5-Tetrachlorobenzene	95-94-3	9
		1,4-Dioxane	123-91-1	9.19
		2-Methylnaphthalene	91-57-6	7.91
		Acenaphthene	83-32-9	7.75
		Acenaphthylene	208-96-8	8.12
		Acetophenone	98-86-2	9.28
		Aniline	62-53-3	7.72
		Anthracene	120-12-7	7.44
		Benzo(a)anthracene	56-55-3	7.45
		Benzo(a)pyrene	50-32-8	7.12
		Benzo(g,h,i)perylene	191-24-2	7.17
		Chrysene	218-01-9	7.6
		Dibenzo(a,h)anthracene	53-70-3	7.39
		Diphenyl sulfide	139-66-2	7.85
		Diphenyl sulfone	127-63-9	9.16
		Fluoranthene	206-44-0	7.9
		Fluorene	86-73-7	7.91

Ionization Potentials for Volatile Site-Related Chemicals

Parameter of Interest	Analytical Method	Compound List	CAS Number	Ionization Potential (eV)
Semi-Volatile Organic Compounds (continued)	**EPA 8270C**	Hexachlorobenzene	118-74-1	9
		m,p-Cresol	106-44-5	8.34
		Naphthalene	91-20-3	8.14
		Nitrobenzene	98-95-3	9.94
		o-Cresol	95-48-7	8.24
		Pentachlorobenzene	608-93-5	8.8
		Phenanthrene	85-01-8	7.89
		Phenol	108-95-2	8.49
		Pyrene	129-00-0	7.43
		Pyridine	110-86-1	9.26
		Thiophenol	108-98-5	8.3
		All other SVOCs	108-98-5	n.p.

Notes:
n.p. - not published.
Source: National Institute of Standards and Technology (NIST) Chemistry WebBook (http://webbook.nist.gov).

BASIC REMEDIATION COMPANY
STANDARD OPERATING PROCEDURES
BMI COMMON AREAS
CLARK COUNTY, NEVADA

SOP-40

DATA REVIEW/VALIDATION

STANDARD OPERATING PROCEDURES

SOP-40
DATA REVIEW/VALIDATION

TABLE OF CONTENTS

Section **Page**

1.0 INTRODUCTION 1

2.0 DEFINITIONS 2

3.0 VALIDATION QUALIFICATIONS 2

4.0 GUIDELINES 6
- 4.1 Chain of Custody 6
- 4.2 Preservation and Holding Times 6
- 4.3 Calibration 6
- 4.4 Blanks 7
- 4.5 Duplicates 7
  - 4.5.1 Analytical Duplicates 7
  - 4.5.2 Field Duplicates 7
- 4.6 Spikes 7
  - 4.6.1 Organic Analyses 7
  - 4.6.2 Inorganic Analyses 9

5.0 DATA REVIEW AND DATA VALIDATION 10
- 5.1 Data Review 10
- 5.2 Data Validation 10

6.0 REFERENCES 16

LIST OF TABLES

Table 1. Laboratory Qualifiers 3
Table 2. Functional Guidelines Validation Qualifiers 3
Table 3. Project-Specific Validation Qualifiers 4
Table 4. Validation Reason Codes 4
Table 5. Data Review/Validation Decision Points 11

DISCLAIMER

THE FOLLOWING STANDARD OPERATING PROCEDURE PROVIDES GENERAL GUIDANCE FOR BRC CONTRACTORS FOR TECHNICAL ISSUES ADDRESSED DURING ENVIRONMENTAL SITE INVESTIGATION AND REMEDIATION ACTIVITIES. IT IS NOTED, HOWEVER, THAT EACH SITE IS UNIQUE AND THESE GUIDELINES ARE NOT A SUBSTITUTE FOR COMMON SENSE AND GOOD MANAGEMENT PRACTICES BASED ON PROFESSIONAL TRAINING AND EXPERIENCE. IN ADDITION, INDIVIDUAL CONTRACT TERMS MAY AFFECT THE IMPLEMENTATION OF THIS STANDARD OPERATING PROCEDURE. BRC CONTRACTORS RESERVE THE UNRESTRICTED RIGHT TO CHANGE, MODIFY OR NOT APPLY THESE GUIDELINES IN THEIR SOLE, COMPLETE, AND UNRESTRICTED DISCRETION TO MEET CERTAIN CIRCUMSTANCES, CONTRACTUAL REQUIREMENTS SITE CONDITIONS, OR JOB REQUIREMENTS. ANY DEVIATIONS FROM STANDARD OPERATING PROCEDURES SHALL BE DOCUMENTED IN THE DATA VALIDATION REPORT IN THE APPROPRIATE QUALITY CONTROL SECTION.

1.0 INTRODUCTION

The *BRC Quality Assurance Project Plan* (QAPP; BRC and ERM 2008) provides the criteria and procedures by which data generated in the field and at the laboratories will be verified and validated. Sample results will be validated in accordance with the following U.S. Environmental Protection Agency (USEPA) guidance documents:

- USEPA *Contract Laboratory Program National Functional Guidelines for Organic Data Review* (USEPA 1999).
- USEPA *Contract Laboratory Program National Functional Guidelines for Low-Concentration Organic Data Review* (USEPA 2001).
- USEPA *Contract Laboratory Program National Functional Guidelines for Inorganic Data Review* (USEPA 2004).
- USEPA *National Functional Guidelines for Chlorinated Dibenzo-p-Dioxins (CDDs) and Chlorinated Dibenzofurans (CDFs) Data Review* (USEPA 2005).
- U.S. Department of Energy *Evaluation of Radiochemical Data Usability, ES/ER/MS-5* (U.S. Department of Energy 1997).

These documents provide detailed procedures for review of analytical data and are to be the primary source of guidance for validation of data collected for BMI Common Areas projects. Recognizing that not all possible analytical deviations are presented in the Functional Guidelines, these guidance documents allow for the use of individual professional judgment in data validation. In addition, the specific analytical methods used in site characterization shall be used to evaluate laboratory data and the laboratories' adherence to the analytical methods.

The purpose of this Standard Operating Procedure (SOP) is to provide further guidance regarding issues subject to professional judgment, to ensure consistency in the data validation process and in qualifier application for BMI Common Areas data. This SOP is to be used in conjunction with the Functional Guidelines and the QAPP and does not serve as complete instruction for data validation. Only those clarifications made to specific parameters are discussed in this SOP. If a quality assurance/quality control (QA/QC) parameter is not discussed; it is understood that the Functional Guidelines are to be followed exactly as written.

It should be noted that this SOP has been developed to provide additional project-specific guidelines beyond those presented in the Functional Guidelines. All data review/validation for

the BMI Common Areas project will be directed by a qualified project chemist who will use professional judgment in all aspects of the data review/validation process. It is possible that a situation could arise such that deviations from this SOP could be warranted based on the project chemist's professional judgment. Such deviations will not be lightly undertaken, as it is BRC's intent to sustain a high level of comparability in the project data set. In such cases, the deviations will be clearly noted and the rationale explained in the associated QA/QC report.

2.0 DEFINITIONS

%R	Percent recovery
CCV	Continuing calibration verification
DL	Detection limit
USEPA	U.S. Environmental Protection Agency
LCS	Laboratory control sample
LCSD	Laboratory control sample duplicate
MDL	Method detection limit
MS	Matrix spike
MSD	Matrix spike duplicate
QA	Quality assurance
QC	Quality control
RPD	Relative percent difference
RL	Report Limit
TDS	Total Dissolved Solids

3.0 VALIDATION QUALIFICATIONS

Based on data validation and review, data qualifiers are placed in the electronic database to signify whether the data are acceptable, acceptable with qualification, or rejected. Definitions of laboratory qualifiers, validation qualifiers, and reason codes that define a particular validation qualifier that are used to qualify data are presented in Tables 1 through 4 below. Validation qualifiers and definitions are based on those used by USEPA in the current validation guidelines presented in Section 1.

Table 1. Laboratory Qualifiers

Laboratory Qualifier	Definition
U	Organic and inorganic analyses: the analyte was not detected above the level of the reported sample quantitation limit.
B	Inorganic analyses: the analyte was detected between the method detection limit and the sample quantitation limit. Organic analyses: the analyte was detected in the associated method blank.
J	Organic analyses: the analyte was detected between the method detection limit and the sample quantitation limit.
E	Organic and inorganic analyses: the sample concentration was greater than the calibration's upper limit and should be considered to be an estimated value.
*	Inorganic analyses: the analytical duplicate precision was not within control limits.
N	Inorganic analyses: the matrix spike was not within control limits.
D	Organic and inorganic analyses: the sample result was diluted.

Table 2. Functional Guidelines Validation Qualifiers

Functional Guidelines Validation Qualifier	Definition
J	The result is an estimated quantity. The associated numerical value is the approximate concentration of the analyte in the sample.
U	The analyte was detected, but qualified as nondetected during data validation due to blank contamination.
UJ	The nondetected analyte was qualified as estimated at the sample quantitation limit. The reported sample quantitation limit is approximate and may be inaccurate or imprecise.
R	The sample result is rejected and unusable due to serious deficiencies in meeting quality control criteria. The analyte may or may not be present in the sample.
J+	Inorganics analyses: the result is an estimated quantity, biased high. The associated numerical value is the approximate concentration of the analyte in the sample.
J-	Inorganics analyses: the result is an estimated quantity, biased low. The associated numerical value is the approximate concentration of the analyte in the sample.

Table 3. Project-Specific Validation Qualifiers

Project-Specific Validation Qualifier	Definition
X	The analytical result is not used for reporting because a more accurate and precise result is reported in its place.
Z	The associated data has not been subjected to the data review/validation process.
J+	Organics analyses: the result is an estimated quantity, biased high. The associated numerical value is the approximate concentration of the analyte in the sample.
J-	Organics analyses: the result is an estimated quantity, biased low. The associated numerical value is the approximate concentration of the analyte in the sample.
J-TDS	Inorganic analysis: the analytical result is estimated based on failure of Total Dissolved Solids (TDS) correctness check performed in accordance with Standard Methods (see Section 5.1)
J-CAB	Inorganic analysis: the analytical result is estimated based on failure of cation-anion balance correctness check performed in accordance with Standard Methods
J-TDS&CAB	Inorganic analysis: the analytical result is unreliable based on failure of cation-anion balance and TDS correctness checks performed in accordance with Standard Methods.

Table 4. Validation Reason Codes

Validation Reason Code	Definition
1	The sample preparation and/or analytical holding time was exceeded.
2#	The analyte was detected below the report limit but above the method detection limit.
3	The analyte was detected in an associated laboratory blank sample.
4	The MS/MSD recovery was outside of control limits.
5	The LCS recovery was outside of control limits.
6##	The MS/MSD RPD was outside of control limits.
7##	The LCS RPD was outside of control limits.
8	The surrogate recovery was outside of control limits.
9##	Level IV data validation qualification.
10	The sample chromatogram did not resemble the standard hydrocarbon pattern.
11	The sample concentration was greater than the instrument's calibration range.

Table 4. Validation Reason Codes

Validation Reason Code	Definition
12	The calibration criterion of RRF, %D, and/or %RSD was not met.
13	The analyte was detected in field blank, rinsate blank, and/or trip blank sample.
14	The internal standards did not meet control criteria.
15	The serial dilution did not meet control criteria.
16	The difference between columns did not meet control criteria.
17	Field duplicates did not meet the 50% RPD control criterion.
18	Sample receipt temperature exceeded the acceptable range of from 4 to 6 degrees Celsius.
19	Analytical duplicate precision did not meet control criteria.
20	Headspace in vials containing water samples to be analyzed for volatiles.
21	The tracer yields did not meet control criteria.
22	The ratio of the measured TDS value to the mathematically calculated TDS sum was outside the specified error range (the cation-anion balance was within the error limits specified in Standard Methods).
23	The cation-anion balance was outside the error limits specified in Standard Methods (the ratio of the measured TDS value to the mathematically calculated TDS sum was within the specified error range).
24	The cation-anion balance was outside the error limits specified in Standard Methods, and the ratio of the measured TDS value to the mathematically calculated TDS sum was outside the specified error range.

[#] This reason code is applied to data entries with lab qualifiers J or B, as defined above.

[##] These reason codes were used in the validation of historical data and will not be used in current and future site investigations.

In historical data validation, the qualifiers B and BJ were used to denote samples that were qualified as nondetected and/or nondetected and estimated at the report limit. In keeping with the Functional Guidelines, the U qualifier will be used for those data that are qualified as nondetected due to blank contamination.

Although it is BRC's intention that all data collected for the BMI Common Areas project will be subjected to data review and/or data validation, for certain historical data and potential future data there may be occasions in which it is deemed infeasible or unnecessary. For any such data

included in the database, a Z qualifier will be assigned in the qualifier column to indicate that the associated data have not been subjected to the data review/validation process.

4.0 GUIDELINES

4.1 Chain of Custody

The chain of custody shall be evaluated for any discrepancies, and if any are found, they will be documented in the narrative. The laboratory shall be contacted to resolve any chain of custody discrepancies.

4.2 Preservation and Holding Times

The Functional Guidelines shall be followed for qualification of sample data for preservation or holding time exceedances with the following clarification. Non-detected volatile sample results should be rejected (R) if the sample temperature is considered to be at or above 15 degrees Celsius, and the sample shipments have arrived at the laboratory more than four hours after collection of the last sample. If this condition exists, detected sample results should be qualified as estimated, with a low bias (J-).

Holding time exceedances are qualified due to the potential loss of analyte. Detections will be qualified as estimated, with a low bias (J-). However, in the case of pH where an exceedance of holding time does not necessarily correspond to a potential decrease in value, results will be qualified as estimated (J). Non-detect values are qualified as estimated (UJ) for organic and non-metal exceedances less than two times the holding time, or rejected (R) if exceeded for metals or if the holding time is exceeded by two times for organics and non-metals.

4.3 Calibration

The Functional Guidelines shall be followed for the qualification of sample data based on calibration exceedances with the following clarification. Non-detected organic sample data shall be rejected (R) if the continuing calibration verification (CCV) percent difference (%D) exceeds ±75%. Detected sample data shall be qualified as estimated (J- or J+, depending on the bias of the CCV %D).

4.4 Blanks

The Functional Guidelines shall be followed for the qualification of sample data based on blank contamination, following the appropriate 5× or 10× rule. The following clarification applies to inorganic sample data qualified on the basis of blank results.

The Functional Guidelines allow for professional judgment in the qualification of sample data when the blank contamination is greater than the detection limit (DL), but less than the report limit (RL), and the sample results are greater than the RL. If deemed appropriate, professional judgment can be used to qualify these results as estimated, with a high bias (J+).

4.5 Duplicates

4.5.1 Analytical Duplicates

The Functional Guidelines shall be followed for the qualification of inorganic sample data based on analytical duplicate results.

4.5.2 Field Duplicates

The Functional Guidelines do not specify qualification of samples based on field duplicate imprecision. However, the QAPP for the BMI Common Areas (BRC and ERM 2008) has determined a control criterion of a relative percent difference of 50% for field duplicates.

If the field duplicate RPD exceeds the 50% limit, non-detected sample results shall be qualified as estimated at the report limit (UJ) and detected results shall be qualified as estimated (J). The RPD will be calculated using the reporting limit for non-detected sample results. Similar to analytical duplicates, this limit does not apply when the result for either the sample or its duplicate is less than 5× the RL. For this situation, the absolute value of the RL is to be used as the control limit.

4.6 Spikes

4.6.1 Organic Analyses

Organic analyses are commonly reported with a laboratory control sample (LCS, or commonly referred to as a blank spike), and an LCS duplicate (LCSD), although an LCSD is not always

analyzed and reported with a sample batch. In addition, a matrix spike (MS) and a matrix spike duplicate (MSD) are sometimes included in the data report.

Spike Exceedances that do not Result in Qualified Data

- Organic sample data are not qualified on the basis of relative percent differences (RPD) outliers if ***any*** of the LCS, LCSD, MS, and/or MSD percent recoveries (%R) are in control.
- Organic sample data are not qualified if a spike is biased high and the associated sample results are non-detected as described in the Functional Guidelines.
- Organic sample data are not qualified if ***any one*** LCS, LCSD, MS, or MSD is out of control, but ***any other*** LCS, LCSD, MS, or MSD associated with the batch is in control.
- Organic sample data are not qualified if the MS/MSD used is from a different client or sample batch (batch QC). However, if the sample used for the MS/MSD is a site sample and it can reasonably be determined that the sample matrix is similar, professional judgment should be used to determine if the remaining samples in the analytical batch should be qualified based on the MS/MSD outlier.

Spike Exceedances that Result in Qualified Data

- If LCS and/or LCSD percent recoveries are less than 10 percent and the MS/MSD results are biased low or no MS/MSD was analyzed with the batch, qualify non-detected organic sample results as rejected (R) and detected sample results as estimated, biased low (J-).
- If a particular organic compound in all of the LCS, LCSD, MS, ***and*** MSDs is biased low, qualify associated detected data for that compound as estimated, biased low (J-), and associated non-detected data as estimated at the report limit (UJ).
- If a particular compound in all of the LCS, LCSD, MS, ***and*** MSDs is biased high, qualify detected data for that compound as estimated, biased high (J+).
- Professional judgment should be used when MS/MSD results are out of control and other QA/QC parameters such as surrogate spikes and internal standards are out of control as well, even if the LCS/LCSD is in control. This would indicate a systematic matrix interference and qualification would be justified.

4.6.2 Inorganic Analyses

Inorganic analyses are commonly reported with an LCS and a MS, although there may be circumstances when a laboratory may report an LCS/LCSD and/or a MS/MSD.

Spike Exceedances that do not Result in Qualified Data

- Inorganic sample data are not qualified on the basis of RPD outliers if the LCS/LCSD and MS/MSD percent recoveries are in control.
- Inorganic sample data are not qualified if a spike is biased high and the associated sample results are non-detected as described in the Functional Guidelines.
- Inorganic sample data are not qualified if the MS/MSD used is from a different client or sample batch (batch QC). However, if the sample used for the MS/MSD is a site sample and it can reasonably be determined that the sample matrix is similar, professional judgment should be used to determine if the remaining samples in the analytical batch should be qualified based on the MS/MSD outlier.

Spike Exceedances that Result in Qualified Data

- For LCS %Rs that are less than 50%, use the Functional Guidelines' rule to qualify non-detected inorganic data as rejected (R) and detected data as estimated, biased low (J-).
- For MS/MSD %Rs that are less than 30%, use the Functional Guidelines' rule to qualify non-detected inorganic data as rejected (R) and detected results as estimated, biased low (J-).
- If analytes in the LCS and LCSD are biased low, qualify detected data as estimated, biased low (J-), and associated non-detected inorganic data as estimated at the report limit (UJ).
- If analytes in the MS and MSD are biased low, qualify detected data as estimated, biased low (J-), and associated non-detected inorganic data as estimated at the report limit (UJ).
- If analytes in the LCS and LCSD are biased high, qualify detected data as estimated, biased high (J+).
- If analytes in the MS and MSD are biased high, qualify detected data as estimated, biased high (J+).

- If the LCS %R is less than 50% and the LCSD %R (or vice versa) is lower than the control limit but not less than 50%, qualify non-detected inorganic sample results as rejected (R), and qualify detected sample results as estimated, biased low (J-).

- If the MS %R is less than 30% and the MSD %R (or vice versa) is lower than the control limit but not less than 30%, qualify non-detected inorganic sample results as rejected (R), and qualify detected sample results as estimated, biased low (J-).

5.0 DATA REVIEW AND DATA VALIDATION

5.1 Data Review

A data review is conducted on data packages that are considered summary data packages, which include a case narrative, summary forms listing the sample results, surrogate results (as appropriate), and QA/QC forms summarizing method blanks, LCS/LCSDs, and MS/MSDs. In addition, analytical duplicates, if performed, will be presented in the summary data package. No raw data are included in a summary data package. Only those QA/QC results that are presented shall be evaluated. No judgments will be made to the data based on missing QA/QC results, given that every opportunity shall be made to identify and locate such records. For applicable inorganics data packages (i.e., those containing cation-anion and TDS data for water samples), the QA/QC will include performing correctness checks as described in the American Public Health Association *Standard Methods for the Examination of Water and Wastewater* (APHA, 1999), including cation-anion balances and determination of measured versus calculated TDS. The inorganic correctness check qualifiers shown in Table 5 will be applied to ions and TDS where appropriate.

5.2 Data Validation

Data validation is performed on full data packages. These data packages include all of the elements listed above, plus all associated raw data. In addition to reviewing all of the data quality parameters listed in the Functional Guidelines for each analysis type, recalculation of 10 percent of the data, including QA/QC samples, will be performed. QA/QC Review items, decision points, applicable qualifiers, and data subject to those qualifiers are presented in Table 5.

Table 5. Data Review/Validation Decision Points

Data Review Item	Condition	Detect Result Qualifier[1]	Non-Detect Result Qualifier[1]	Scope of Qualification
HOLDING TIMES (SOP 40, § 4.2) **Data Review and Validation**	Holding time consistent with Method requirements	none	none	
	Organic and Non-Metal Analyses: Holding time exceeded by 2 times or less	J- or J (for pH)	UJ	All analytes reported in the affected sample and method
	Holding time exceeded by greater than 2 times	J- or J (for pH)	R	
	Metal Analyses: Holding time exceeded	J-	R	
SAMPLE TEMPERATURE (SOP 40, § 4.2) **Data Review and Validation**	Temperature consistent with Method requirements	none	none	
	Cooler temperature > 6°C	J-	UJ	All analytes reported in the affected sample and method
	Cooler temperature ≥ 15°C and samples arrived at laboratory > 4 hours after last sample collected	J-	R (volatiles only)	
CALIBRATION (SOP 40, § 4.3) **Data Validation**	Please see the appropriate National Functional Guidelines for individual criteria. The RRF and linearity criteria in the Functional Guidelines shall be followed.			
	Organic Analyses: Continuing calibration verification (CCV) percent difference > appropriate GC or GC/MS limit ≤ ±75%	J+/J- (depending on bias)	UJ (if biased low)	All affected analytes associated with the CCV
	Continuing calibration verification (CCV) percent difference > ±75%	J+/J- (depending on bias)	R	
BLANKS (method, field, equipment, trip) (SOP 40, § 4.4) **Data Review and Validation**	**Organic Analyses**: Sample analyte result ≤ blank result multiplied by 5X or 10X, as appropriate	U	none	Analytes detected in samples that are detected in the associated blank
	Sample analyte result > blank result multiplied by 5X or 10X, as appropriate	none	none	
	Inorganic Analyses: Blank result ≥ MDL but ≤ RL and sample result ND or sample result > RL	none	none	

Table 5. Data Review/Validation Decision Points

Data Review Item	Condition	Detect Result Qualifier[1]	Non-Detect Result Qualifier[1]	Scope of Qualification
BLANKS (Continued)	Blank result ≥ MDL but ≤ RL and sample result ≥ MDL but ≤ RL	U	none	Analytes detected in samples that are detected in the associated blank
	Blank result > RL and sample result ND	none	none	
	Blank result > RL and Sample Result ≥ MDL but ≤ RL	U	none	
	Calibration Blank result > RL and Sample Result > RL but < Calibration blank result	U	none	
	Calibration Blank result > RL and Sample Result > Calibration blank result	None; unless professional judgment suggests otherwise	none	
	Non-Calibration Blank (i.e. preparation, field or equipment) result > RL and Sample Result > RL but < 10x blank result	J+; unless professional judgment suggests "U"	none	
	Non-Calibration Blank result > RL and Sample Result > 10x blank result	none	none	
DUPLICATES (SOP 40, § 4.5) **Data Review and Validation**	**Analytical Duplicates (inorganic results only):** Relative Percent Difference ≤ 20%	none	none	Apply to samples in the analytical batch
	Relative Percent Difference > 20%, when detection in sample and duplicate >5x RL	J	UJ	
	Difference > Absolute value of RL, when detection in sample **or** duplicate ≤5x RL	J	UJ	
	Field Duplicates (inorganic or organic results): Relative Percent Difference ≤ 50%	none	none	Apply to sample and duplicate
	Relative Percent Difference > 50%, when detection in sample and duplicate >5x RL	J	UJ	
	Difference > Absolute value of RL, when detection in sample **or** duplicate ≤5x RL	J	UJ	

Table 5. Data Review/Validation Decision Points

Data Review Item	Condition	Detect Result Qualifier[1]	Non-Detect Result Qualifier[1]	Scope of Qualification
SURROGATE RECOVERY (organic methods only) **TRACER/CARRIER RECOVERY (applicable radiochemistry methods only)** [as per Functional Guidelines; not discussed in SOP 40] **Data Review and Validation**	% Recovery ≤ 10	J-	R	For GC and GC/MS volatile organics and GC and HPLC semi-volatile organics, all analytes reported in the affected sample For GC/MS semi-volatile organics, all analytes in the affected sample that have the same acid or base-neutral fraction as the surrogate For radiochemistry methods, all reported isotopes in affected sample
	% Recovery > 10% and < Laboratory Lower Limit	J-	UJ	
	% Recovery > Laboratory Upper Limit Note: For GC/MS semi-volatile analysis, two or more surrogates in a fraction must be out of criteria for qualification unless recovery < 10%.	J+	none	
MATRIX SPIKE/MATRIX SPIKE DUPLICATE RECOVERY (SOP 40, § 4.6) **Data Review and Validation**	**<u>Organic Analyses</u>**: % Recovery for a particular compound ≤ Laboratory Lower Limit in all LCS. LCSD, MS, and MSDs	J-	UJ	Affected analyte in the associated parent sample or all associated samples as discussed in the main text(2)
	% Recovery > Laboratory Lower Limit and ≤ Laboratory Upper Limit	none	none	
	% Recovery > Laboratory Upper Limit in all LCS. LCSD, MS, and MSDs	J+	none	
	<u>Inorganic Analyses:</u> MS/MSD % Recoveries ≤ 30%	J-	R	
	% Recovery for a particular compound ≤ 30% in **one** of either the MS or MSD and ≤ 75% for the other (MS or MSD)	J-	R	
	% Recovery for a particular compound > 30% and ≤ 75% in both the MS and MSD	J-	UJ	
	MS/MSD % Recoveries > 75% and ≤ 125%	none	none	
	% Recovery for a particular compound > 125% in both MS and MSD	J+	none	

Table 5. Data Review/Validation Decision Points

Data Review Item	Condition	Detect Result Qualifier[1]	Non-Detect Result Qualifier[1]	Scope of Qualification
LABORATORY CONTROL SAMPLE/ LABORATORY CONTROL SAMPLE DUPLICATE RECOVERY (SOP 40, § 4.6) **Data Review and Validation**	**Organic Analyses**: LCS/LCSD % Recoveries for a particular compound ≤ 10% **and** MS/MSD not performed or biased low	J-	R	Affected analyte in the associated parent sample or all associated samples as discussed in the main text(2)
	% Recovery for a particular compound ≤ Laboratory Lower Limit in all LCS. LCSD, MS, and MSDs	J-	UJ	
	LCS/LCSD % Recoveries > Laboratory Lower Limit and ≤ Laboratory Upper Limit	none	none	
	% Recovery > Laboratory Upper Limit in all LCS. LCSD, MS, and MSDs	J+	none	
	Inorganic Analysis: LCS/LCSD % Recoveries ≤ 50%	J-	R	
	% Recovery for a particular compound < 50% in **one** of either the LCS or LCSD and ≤ Laboratory Lower Limit for the other (LCS or LCSD)	J-	R	
	% Recovery for a particular compound > 50% and ≤ Laboratory Lower Limit in both the LCS and LCSD	J-	UJ	
	LCS/LCSD % Recoveries > Laboratory Lower Limit and ≤ Laboratory Upper Limit	none	none	
	% Recovery for a particular compound > Laboratory Upper Limit in both LCS and LCSD	J+	none	

Table 5. Data Review/Validation Decision Points

Data Review Item	Condition	Detect Result Qualifier[1]	Non-Detect Result Qualifier[1]	Scope of Qualification
INORGANIC CORRECTNESS CHECKS (water samples) (SOP 40, § 5.1) **Data Review and Validation**	Ratio of TDS (Measured)/TDS (calculated) ≥1.0 and ≤1.2	none	none	All analytes used to calculate TDS and TDS in affected sample
	Ratio of TDS (Measured)/TDS (calculated) <1.0 or >1.2	J-TDS	none	
	Cation-anion difference falls below the criterion on the right (dependent on magnitude of anion sum): **When Anion Sum (meq/L)** — **Σ Cation Σ Anion Difference** 0 to 3.0 — ± 0.2 meq/L 3.0 to 10.0 — ± 2% (3) 10.0 to 800 — ± 5% (3)	none	none	All cations and anions in affected sample
	Using the above ranges/criteria, cation-anion difference falls above the criterion on the right:	J-CAB	none	
	Both TDS and cation-anion balance checks do not pass above metrics	J-TDS&CAB	none	TDS, analytes used to calculate TDS, and anions and cations in affected sample

Notes:

1. Data review qualifiers follow the EPA Functional Guidelines. The overall data-review qualifier is a summation of all qualifiers contributed by each applicable data review item listed here. The hierarchy is as follows:
   J + U = UJ
   J + UJ = UJ
   J^+ + J = J
   J^- + J = J
   J^+ + J^- = J
   R + any qualifier = R
   Each result record is updated with applicable individual data-review item qualifiers and the overall data-review qualifier.

2. For organic data, no qualifiers added on this basis if ***any one*** of the LCS, LCSD, MS, or MSD % Recoveries is in control. Furthermore, inorganic or organic sample data are not qualified if the MS/MSD used is from a different client or sample batch, unless it can be reasonably determined that the sample matrix is similar; professional judgment is used in such cases to determine whether qualifiers are warranted. Professional judgment should be used when MS/MSD results are out of control and other QA/QC parameters (i.e., surrogate spikes and internal standards) are out of control as well, even if the LCS/LCSD is in control; this would indicate a systematic matrix interference and qualification would be justified.

3. % difference for cation-anion balance to be determined using the following formula:

$$\% \text{ difference} = 100 \frac{\Sigma \text{ cations} - \Sigma \text{ anions}}{\Sigma \text{ cations} + \Sigma \text{ anions}}$$

6.0 REFERENCES

Basic Remediation Company (BRC) and Environmental Resources Management (ERM). 2008. BRC Quality Assurance Project Plan. BMI Common Areas, Clark County, Nevada. April.

American Public Health Association (APHA). 1999. Standard Methods for the Examination of Water and Wastewater, 1999. 20th Edition, Section 1030 E - Checking Correctness of Analyses. January.

U.S. Environmental Protection Agency (USEPA). 1999. National Functional Guidelines for Organic Data Review. USEPA 540/R-99-008. OSWER 9240.1-05A-P. October.

U.S. Environmental Protection Agency (USEPA). 2001. National Functional Guidelines for Low-Concentration Organic Data Review. USEPA 540-R-00-006. OSWER 9240.1-34. June.

U.S. Environmental Protection Agency (USEPA). 2004. National Functional Guidelines for Inorganic Data Review. USEPA 540-R-04-004. OSWER 9240.1-45. October.

U.S. Environmental Protection Agency (USEPA). 2005. National Functional Guidelines for Chlorinated Dibenzo-p-Dioxins (CDDs) and Chlorinated Dibenzofurans (CDFs) Data Review. OSWER 9240.1-51, EPA-540-R-05-001. September.

U.S. Department of Energy. 1997. Evaluation of Radiochemical Data Usability. U.S. Department of Energy ES/ER/MS-5. April.

BASIC REMEDIATION COMPANY
STANDARD OPERATING PROCEDURES
BMI COMMON AREAS
CLARK COUNTY, NEVADA

SOP-41

APPROACH FOR SURFACE SOIL SAMPLING

STANDARD OPERATING PROCEDURES

SOP-41
APPROACH FOR SURFACE SOIL SAMPLING

TABLE OF CONTENTS

Section **Page**

1.0 INTRODUCTION 1

2.0 APPROACH 2

3.0 REFERENCES 4

DISCLAIMER

THE FOLLOWING STANDARD OPERATING PROCEDURE PROVIDES GENERAL GUIDANCE FOR BRC CONTRACTORS FOR TECHNICAL ISSUES ADDRESSED DURING ENVIRONMENTAL SITE INVESTIGATION AND REMEDIATION ACTIVITIES. IT IS NOTED, HOWEVER, THAT EACH SITE IS UNIQUE AND THESE GUIDELINES ARE NOT A SUBSTITUTE FOR COMMON SENSE AND GOOD MANAGEMENT PRACTICES BASED ON PROFESSIONAL TRAINING AND EXPERIENCE. IN ADDITION, INDIVIDUAL CONTRACT TERMS MAY AFFECT THE IMPLEMENTATION OF THIS STANDARD OPERATING PROCEDURE. BRC CONTRACTORS RESERVE THE UNRESTRICTED RIGHT TO CHANGE, MODIFY OR NOT APPLY THESE GUIDELINES IN THEIR SOLE, COMPLETE, AND UNRESTRICTED DISCRETION TO MEET CERTAIN CIRCUMSTANCES, CONTRACTUAL REQUIREMENTS SITE CONDITIONS, OR JOB REQUIREMENTS. ANY DEVIATIONS FROM STANDARD OPERATING PROCEDURES SHALL BE DOCUMENTED IN THE DATA VALIDATION REPORT IN THE APPROPRIATE QUALITY CONTROL SECTION.

1.0 INTRODUCTION

This Standard Operating Procedure (SOP) is a guidance document that describes the sampling approach for surface soils. This SOP was prepared by Basic Remediation Company (BRC) to define how surface soil samples will be collected at its Common Areas site in Henderson Nevada. BRC has conducted and expects to conduct several additional sampling programs in conjunction with site characterization and remediation confirmation activities at the Common Areas site. Regardless of program goals, BRC and the Nevada Division of Environmental Protection (NDEP) have agreed that non-composite or discrete soil samples are preferred in all cases. It should be noted, however, that sampling for asbestos does involve composite sampling and is conducted using SOP-12.

There are no binding statutory or regulatory (Federal or Nevada) definitions of what constitutes "surface" soil, for all investigation sampling scenarios. There is also no definitive U.S. Environmental Protection Agency (USEPA) guidance on this subject. For example, the USEPA Guidance for Data Useability in Risk Assessment (Part A) (1992) notes that surface soil is the top 0 to 6 inches of soil. Yet another guidance – the *Corrective Action Strategy: Guide for Pilot Projects* (USEPA 2000) notes that surface soil is defined as 0 to 12 inches. More recent guidance on this subject is also provided in the USEPA (2002) *Supplemental Guidance for Developing Soil Screening Levels for Superfund Sites*. This guidance notes that

> For purposes of soil screening analyses, EPA distinguishes between surface and subsurface soils as follows: surface soils are located within two centimeters of the ground surface, and subsurface soils are located more than two centimeters below the surface.

However, the same document also states that

> However, other CSMs [conceptual site models] may feature residential activities (e.g., gardening) or commercial/industrial (e.g., outdoor maintenance or landscaping) or construction activities that may disturb soils to a depth of up to two feet, potentially exposing receptors to contaminants in subsurface soil via direct contact pathways such as ingestion and dermal absorption.

The notion that surface soils can be deeper than the first few inches of soil is further strengthened by a document from USEPA Region 9 (1999) which notes that implements such as augers or a series of extension rods, etc. can be used to bore a hole to the "desired sampling depth" in order to obtain surface soils.

Thus, one can infer that EPA defines surface soil as the 0-2 cm or 0-6 inches (depending on the guidance) but defines the soil exposure depth interval for "shallow" soil (for chronic workers and residential receptors) to be 0-2 ft (USEPA, 2002).

BRC has developed an NDEP-approved Site-Related Chemicals (SRC) List which contains over 400 analytes. Even when only a portion of the analytes are addressed for any given investigation purpose, a significant amount of sample volume is typically required in order to obtain sufficient sample to support analytical demands, including quality control. This significant requirement for sample volumes renders a very shallow vertical definition of surface soil impractical. Given the magnitude of sample volume required, defining surface soil, strictly as the upper 2 cm per the USEPA guidance above would necessitate collecting a sample over a large lateral area. BRC believes that this would not be the most representative method for collecting samples.

2.0 APPROACH

Because the subsurface at the Common Areas consists of Quaternary alluvium (Qal) from grade to several tens of feet below grade, several analytical and geotechnical parameters are not anticipated to significantly vary, for project purposes, within the upper 2 feet of the subsurface. BRC generally considers a soil sample from no deeper than 2 feet to be appropriate for characterization of shallow soil from upper Qal unit.

It should also be noted that during redevelopment, nominal grading and mixing activities at the site are expected to extend to at least a depth of 2 feet. Soils are expected to be graded, reworked, mixed and recompacted. It is the belief of BRC that this provides further justification of a surface soil definition of 0 to 2 feet, from an exposure standpoint. To reiterate, after remediation, the Site will be completely, graded, mixed, sorted and recompacted. It is expected that this activity will involve at least the first two feet soil and this provides adequate reasoning to use the 0 to 2 feet depth interval as the basis for the surface soil depth interval and associated exposure point concentration calculations for forthcoming health risk assessments. If desired, a 0 to 6 inch depth interval may also be used for surface soils, with the collection of the soils over a larger area (approximately four times larger) in order to obtain adequate soil mass for analytical purposes. It is also noted that the regional background dataset defines surface soils as the 0 to 6 inch depth interval. This is another consideration for the collection of surface soils from this depth interval in future sampling efforts to insure maximum comparability.

Thus, BRC's overall approach is to collect a surface sample from the smallest possible geometry (both vertically and horizontally), consistent with meeting sample volume requirements. Thus, if

small sample volumes are required (such as for targeted analytes), lateral extents and vertical extents can be minimized. For example, sample depths may be restricted to 6 inches. In no case can the vertical depth exceed 2 feet. BRC believes that this approach strikes a proper balance between avoiding creating a composite sample either horizontally or vertically. The preferred methodology, however, will be to collect samples from 0-6" for maximum comparability to the existing background datasets.

3.0 REFERENCES

U.S. Environmental Protection Agency (USEPA). 1992. Guidance for Data Usability in Risk Assessment. Part A. Office of Emergency and Remedial Response, Washington D.C. Publication 9285.7-09A. PB92-963356. April.

U.S. Environmental Protection Agency (USEPA). 1999. USEPA Region 9 Laboratory Field Sampling Guidance Document #1205 – Soil Sampling, September.

U.S. Environmental Protection Agency (USEPA). 2000. Corrective Action Strategy: Guide for Pilot Projects. Region 6. November.

U.S. Environmental Protection Agency (USEPA). 2002. Supplemental Guidance for Developing Soil Screening Levels for Superfund Sites. Office of Solid Waste and Emergency Response, Washington, DC. OSWER 9355.4-24. December.

BASIC REMEDIATION COMPANY
STANDARD OPERATING PROCEDURES
BMI COMMON AREAS
CLARK COUNTY, NEVADA

SOP-42

SUBSURFACE SOIL SAMPLING BY GEOPROBE™ METHODS

STANDARD OPERATING PROCEDURES

SOP-42
SUBSURFACE SOIL SAMPLING BY GEOPROBE™ METHODS

TABLE OF CONTENTS

Section **Page**

1.0 INTRODUCTION 1
1.1 Purpose and Applicability 1
1.2 General Principles 1
1.3 Quality Assurance Planning Considerations 2
1.4 Health and Safety Considerations 2

2.0 RESPONSIBILITIES 5
2.1 Project Manager or Task Leader 5
2.2 Site Hydrogeologist 5
2.3 Field Team Leader 5
2.4 Project Geologist/Sampling Engineer 5
2.5 Drilling Subcontractor 6

3.0 RESPONSIBILITIES 6

4.0 METHOD 6
4.1 General Method Description 7
4.2 Equipment Decontamination 8
4.3 Sampling Procedures - Macro-Core Sampler 8
4.3.1 Sampler Preparation 8
4.3.2 Sampling 8
4.3.3 Sample Recovery 9
4.4 Sampling Procedures - Large Bore Sampler 9
4.4.1 Sampler Preparation 9
4.4.2 Sampling 9
4.4.3 Sample Recovery 10
4.5 Sample Containment 10
4.5.1 General 10
4.5.2 Volatile Organic Samples 10

5.0 QUALITY CONTROL 11

6.0 DOCUMENTATION 11

7.0 REFERENCES 11

LIST OF FIGURES

Figure 1 Soil Sampling Tools – Macro-Core Sampler - Parts 3
Figure 2 Soil Sampling Tools – Probe Drive System/Large Bore 4

LIST OF TABLES

Table 1 Geoprobe Systems Soil Sampler Characteristics.....7

LIST OF ATTACHMENTS

Attachment 1 Example Boring/Lithologic Log Form

DISCLAIMER

THE FOLLOWING STANDARD OPERATING PROCEDURE PROVIDES GENERAL GUIDANCE FOR BRC CONTRACTORS FOR TECHNICAL ISSUES ADDRESSED DURING ENVIRONMENTAL SITE INVESTIGATION AND REMEDIATION ACTIVITIES. IT IS NOTED, HOWEVER, THAT EACH SITE IS UNIQUE AND THESE GUIDELINES ARE NOT A SUBSTITUTE FOR COMMON SENSE AND GOOD MANAGEMENT PRACTICES BASED ON PROFESSIONAL TRAINING AND EXPERIENCE. IN ADDITION, INDIVIDUAL CONTRACT TERMS MAY AFFECT THE IMPLEMENTATION OF THIS STANDARD OPERATING PROCEDURE. BRC CONTRACTORS RESERVE THE UNRESTRICTED RIGHT TO CHANGE, MODIFY OR NOT APPLY THESE GUIDELINES IN THEIR SOLE, COMPLETE, AND UNRESTRICTED DISCRETION TO MEET CERTAIN CIRCUMSTANCES, CONTRACTUAL REQUIREMENTS, SITE CONDITIONS, OR JOB REQUIREMENTS.

1.0 INTRODUCTION

1.1 Purpose and Applicability

This Standard Operating Procedure (SOP) describes the methods available for collecting subsurface soil samples using commercially available hydraulic push/percussion (Geoprobe™ Systems or other similar vendor) soil probing equipment. Subsurface soil samples may be obtained using this system for purposes of determining subsurface soil conditions and for obtaining soil samples for physical and/or chemical evaluation. The purpose of this SOP is to provide a description of a specific method or procedure to be used in the collection of subsurface soil samples using the hydraulic push/percussion method. Subsurface soil is defined as unconsolidated material which may consist of one or a mixture of the following materials: sand, gravel, silt, clay, peat (or other organic soils), and fill material. Subsurface soil sampling, conducted in accordance with this SOP will promote consistency in sampling and provide a basis for sample representativeness.

This SOP covers subsurface soil sampling using Geoprobe™ Systems equipment; specifically, the Macro-Core Soil Sampler and the Large Bore Sampler. Use of this sampling equipment requires use of the Geoprobe™ hydraulically-powered percussion/probing machine. Geoprobe™ sampling is usually performed by subcontractors, although rental equipment is available for use by trained operators.

The Geoprobe™ sampling methods covered in this SOP are applicable to unconsolidated soil/fill materials and to a maximum depth of approximately 50 feet. Sampling depths are greatly dependent upon soil density as the hydraulically-powered probing unit has power limitations. Sample recovery is also somewhat dependent on grain size as very coarse gravel, cobbles, and boulders will occasionally cause premature refusal of the sampler. It is generally preferable to have some prior knowledge of site soil conditions if sampling activities are proposed where equipment limitations may become a factor.

1.2 General Principles

Soil sampling using the Geoprobe™ System requires use of the hydraulically-powered percussion/probing machine and either the Macro-Core Soil Sampler or the Large Bore Sampler soil sampling devices. The percussion/probing machine is typically mounted onto the bed of a pickup truck, van or all terrain vehicle (ATV) so that a stable working platform is established. The percussion/probing machine, through its hydraulic operation, pushes and hammers the soil

sampling equipment vertically into the ground within the targeted sampling interval. The soil sampler is then extracted from the ground to recover the sample.

The Macro-Core Sampler (Figure 1) consists of a 45-inch long by 1.5-inch diameter open-ended steel sampling tool with liners made of clear plastic (cellulose acetate butyrate), stainless steel, or Teflon. The tool is designed for use in a continuous sampling capacity in an open borehole up to depths of approximately 24 feet. The borehole walls are required to stay open in order to collect a sample from the next depth interval. Once the sampling tool is removed from the ground, the inserted liner containing the soil sample is removed from the tool. The soil sample is then cut from or extracted from the liner. This sampling tool is most often used for soil profiling and collection of larger volume soil samples (1,300 ml).

The Large Bore Sampler (Figure 2) consists of a 22-inch long by a slightly over 1-inch diameter steel sampling tool and may be used for sampling to depths of approximately 30 feet. Various liner types are available for use with this sampler, and include: plastic, brass, stainless steel, and Teflon. The metal liners are available in segmented 6-inch lengths. The sampler is designed for discrete interval sampling and is not affected significantly by borehole wall collapse. This sampler is similar to a piston sampler where a retractable drive (piston) point is withdrawn when the targeted sampling interval is achieved and the soil sample enters the sampler. Once the sampler is removed from the ground, the inserted liner containing the soil sample is extracted from the sampler and the soil sample is then cut from or extracted from the liner. The segmented liner materials and discrete interval sampling capability gives this device greater suitability for collection of smaller volume soil samples (320 ml).

1.3 Quality Assurance Planning Considerations

Sampling personnel will follow specific quality assurance guidelines as outlined in the site-specific Quality Assurance Project Plan (QAPP). The QAPP details the quality assurance requirements which will allow for collection of representative samples from representative sampling points. Quality assurance requirements outlined in the QAPP typically suggest the collection of a sufficient quantity of field duplicate, field blank, and other samples.

1.4 Health and Safety Considerations

The health and safety considerations for the site, including both potential physical and chemical hazards, are addressed in the site-specific Health and Safety Plan (HASP). All field activities will be conducted in conformance to this HASP.

SOIL SAMPLING TOOLS - Macro-Core Sampler - Parts

Macro-Core Sampler
AT-720 Series
The sampler features a nickel-plated sample tube that is 48" long x 2.0" in diameter, a hardened tool steel cutting shoe that has a 1.5" diameter opening, and a tapered drive head that fits standard Geoprobe probe rods. The overall length assembled is 51.25". Sample recovery is 45" long x 1.50" diameter (1302 ml) in a PETG liner.

PARTS	
AT-720	MC Cutting Shoe
AT-721	MC Drive Head
AT-722	MC Sample Tube
AT-725	MC PETG (clear plastic) Liner
AT-726	MC Vinyl End Cap
AT-727	MC Shoe Wrench

KITS
Assembled Macro-Core Sampler*
Part No. AT-720K
Includes the following parts:
(1) **AT-720** MC Cutting Shoe
(1) **AT-721** MC Drive Head
(1) **AT-722** MC Sample Tube
*kit does not include liners and end caps

LINERS	
AT-725K	MC PETG Liners (pre-flared, clear plastic) Box of 66 only
AT-726K	MC Vinyl End Caps (fit AT-725 liners) Box of 66 pairs (66 red/66 black)

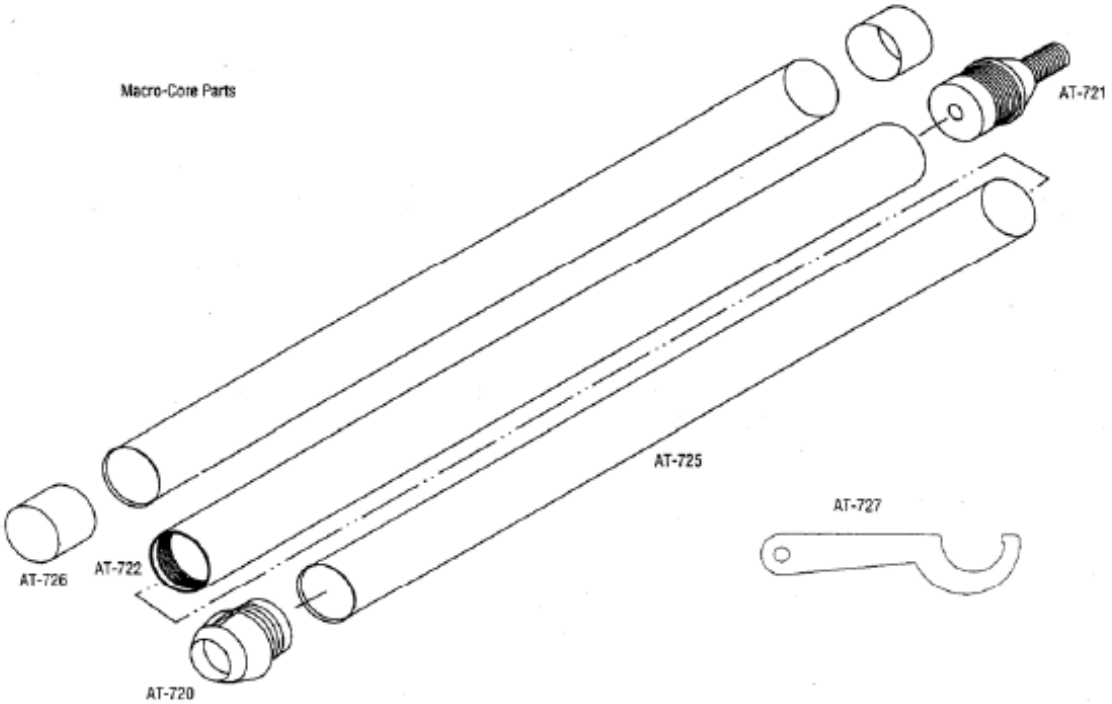

Geoprobe Systems

Figure 1. Soil Sampling Tools – Macro-Core Sampler - Parts

SOIL SAMPLING TOOLS - Probe Drive System/Large Bore

Large Bore Sampler
AT-660 Series
Features nickel plated sample tube, replaceable hardened tool steel cutting shoe and removable liner. Recovers core approximately 22" long x 1-1/16" diameter (320 ml). Uses STD Piston Stop-Pin. Recommended for sampling depths up to 30 feet. Liners available in brass, stainless steel, PTFE (Teflon), or PETG (clear plastic).

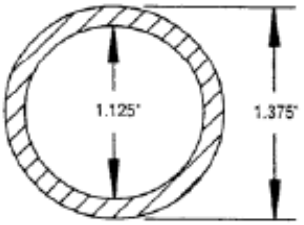

Actual size of sample tube

Large Bore Sampler Parts:

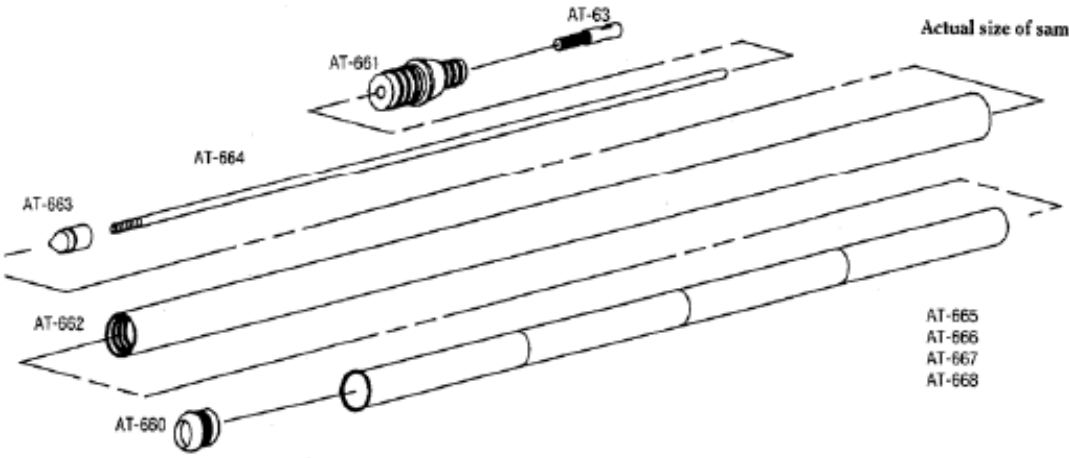

PARTS

Large Bore Sampler Parts	Liners	Also required:
AT-660 LB Cutting Shoe	**AT-665** LB PETG Liner	**AT-63** STD Stop-Pin
AT-661 LB Drive Head	**AT-666** LB Brass Liner	**AT-63R** Stop-Pin O-rings
AT-662 LB Sample Tube	**AT-667** LB Stainless Liner	**AT-67** Extension Rod
AT-663 LB Piston Tip	**AT-668** LB PTFE Liner	**AT-68** Extension Rod Coupler
AT-664 LB Piston Rod		**AT-69** Extension Rod Handle
AT-669 LB Shoe Wrench		

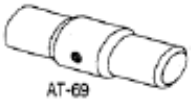

PARTS

Parts used with all Probe-Drive Samplers	
AT-63	STD Stop-Pin
AT-63R	Stop-Pin O-rings
AT-67	Extension Rod
AT-68	Extension Rod Coupler
AT-69	Extension Rod Handle

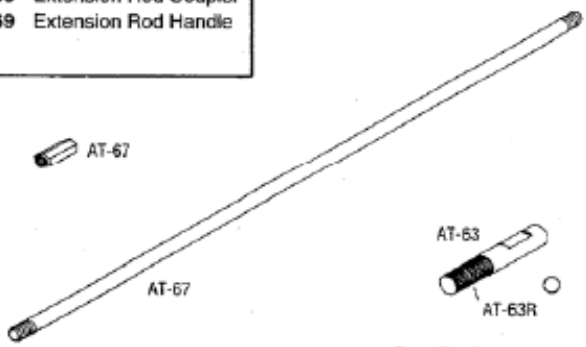

Extension Rod Parts

Stop-Pin Parts

Geoprobe Systems

Figure 2. Soil Sampling Tools – Probe Drive System/Large Bore

As part of the health and safety procedures all boring locations will be cleared for underground utilities by notifying the appropriate notification agency (i.e. Dig Alert, Underground Service Alert [USA], etc.) prior to any intrusive activities occurring. In addition, a geophysical survey of each boring location may be performed by a third party geophysical company. After all sampling locations have been cleared by the above procedures, a hand auger or air-knife, will be used to advance the borehole for the first eight (8) feet to confirm no underground utilities are present.

If the soil sampling occurs at a facility that issues internal "dig permits", these will be obtained prior to any other permits being obtained or notifications being issued.

2.0 RESPONSIBILITIES

2.1 Project Manager or Task Leader

The Project Manger or Task Leader (a qualified Nevada C.E.M.) will select the site-specific drilling methods, with input from the Site Hydrogeologist and Field Team Leader and will maintain close supervision of the activities and progress.

2.2 Site Hydrogeologist

The Site Hydrogeologist selects site-specific drilling options and assists in the preparation f technical provisions of drilling procedures and details.

2.3 Field Team Leader

The Field Team Leader implements the selected drilling program and assists in the selection of drilling methods.

2.4 Project Geologist/Sampling Engineer

It will be the responsibility of the project geologist/sampling engineer to conduct subsurface soil sampling in a manner which is consistent with this SOP. The project geologist/sampling engineer will observe all activities pertaining to subsurface soil sampling to ensure that the SOP is followed, and to record all pertinent data onto a boring log (Attachment 1). It is also the project geologist/sampling engineer's responsibility to indicate the specific targeted sampling depth or sampling interval to the drilling subcontractor. The project geologist/sampling engineer is also responsible for the collection of representative environmental or stratigraphic characterization

samples once the sampling device has been retrieved and opened. Additional sample collection responsibilities include labeling, handling, and storage of samples until further chain-of-custody procedures are implemented.

2.5 Drilling Subcontractor

It will be the responsibility of the drilling subcontractor to provide the necessary Geoprobe™ equipment for obtaining subsurface soil samples. This generally includes the truck or ATV-mounted percussion/probing machine and one or more Macro-Core and Large Bore samplers in good operating condition, appropriate liners, and other necessary equipment for borehole preparation and sampling. It is the drilling subcontractor's responsibility to provide and maintain their own boring logs if desired. Equipment decontamination materials will also be provided by the subcontractor and will meet project specifications.

3.0 RESPONSIBILITIES

In addition to those materials provided by the subcontractor, the project geologist/sampling engineer will require:

- Project Sampling Plan, QAPP, and HASP
  - Boring Logs
  - Teaspoon or spatula
  - Sample kit (bottles, labels, custody records and tape, cooler)
  - Sample collection pan
  - Folding rule or tape measure
  - Utility knife
  - Equipment decontamination materials (as required by QAPP)
  - Health and safety equipment (as required by HASP)
  - Field project notebook/pen

All sampling equipment which comes in direct contact with environmental samples during the sample collection process should be constructed of stainless steel, Teflon, or glass, unless specified otherwise in the Project Sampling Plan or QAPP.

4.0 METHOD

The following sections describe the procedures to be used for collection of soil samples using the Macro-Core Sampler and the Large Bore Sampler.

4.1 General Method Description

Geoprobe™ soil sampling methods generally involve collection of soil samples by driving the sampling tool directly into the ground using the percussion/probing machine. Both the Macro-Core and Large Bore soil samplers consist of metal tubes of seamless construction which can not be split apart like split-spoons. Liner/sleeve inserts are required in order to extract an intact soil core/sample from the sampling device.

Both sampling devices operate by being directly pushed/hammered into the ground by the percussion/probing machine. The borehole is created as the sampling device is advanced downward.

The Macro-Core Sampler collects samples continuously and requires that an open borehole be maintained for efficient sample recovery. The Large Bore Sampler contains a piston tip/drive point which allows for advancing the sampler to a designated depth for discrete interval sampling. The piston tip is retracted when the desired sampling interval is reached. When the soil sampling device is retrieved from the borehole, the drive head, cutting shoe and/or piston assembly is removed, and the liner insert with sample is removed from the sampling device. The project geologist/sampling engineer is then given access to the sample for whatever purpose is required.

Table 1 summarizes the construction characteristics and sampling attributes of each type of sampler. The appropriate type of sampler should be selected based on project-specific sampling requirements.

Table 1. Geoprobe Systems Soil Sampler Characteristics

Sampler Type	Length (in.)	Diameter (in.)	Volume (ml)	Sleeve Liner Type	Suitability[1]			
					Soil Logging	Physical Testing	Chemical-Inorganics	Chemical-Organics
Macro-Core	45	1.5	1,300	Acetate	A	A	A	B
				Stainless Steel	B	A	B	A
				Teflon	A	A	A	A
Large Bore	22	1.06	320	Acetate	A	A	A	B
				Brass	B	A	B	B
				Stainless Steel	B	A	B	A
				Teflon	A	A	A	A

[1] A - Preferred suitability
B - Acceptable suitability

4.2 Equipment Decontamination

Each sampling device must be decontaminated prior to its initial use and following collection of each soil sample, especially if sampling for analytical testing purposes is conducted. If sampling for soil logging only is conducted, thorough sampler decontamination between samples may not be necessary although sufficient cleansing is necessary for the sampler to operate properly. However, equipment will be steam cleaned between sample locations. Site-specific requirements for equipment decontamination are detailed in the Project Sampling Plan and the QAPP.

4.3 Sampling Procedures - Macro-Core Sampler

(Note: These procedures are excerpted from Geoprobe™ Systems literature. This SOP assumes that the subcontractor will perform sampling; therefore, detailed procedures regarding sample acquisition are not provided.)

4.3.1 Sampler Preparation

- Decontaminate the sampler parts (cutting shoe, sample tube, liners) before assembly.
- Assemble the sampler by first placing the liner over the inside end of the cutting shoe, then inserting the liner/shoe assembly into the sample tube, and then finally threading the cutting shoe into the sample tube.
- Tighten the cutting shoe with the shoe wrench.
- Thread the sampler onto the drive head.

4.3.2 Sampling

- Using the percussion/probing machine, drive the sampler into the ground until the drive head reaches the ground surface.
- For deeper samples, the borehole walls must remain stable. The cutting shoe is designed with a tapered surface to limit sidewall scraping. Add additional probe rods until the sampler reaches the targeted sample interval, and then drive the sampler through the desired sample interval.
- Use the machine hydraulics to pull the sampler from the borehole.

4.3.3 Sample Recovery

- Once the sampler has been removed from the borehole, the sampler must be unthreaded from the drive head, the cutting shoe unthreaded from the sampler, and the liner/shoe assembly removed from the sample tube.
- Disconnect the cutting shoe from the liner which contains the soil sample.
- The recovered soil sample may now be viewed, logged, and extracted from the liner for analysis (refer to Section 4.5 for sample containment procedures).

4.4 Sampling Procedures - Large Bore Sampler

(Note: These procedures are excerpted from Geoprobe™ Systems literature. This SOP assumes that the subcontractor will perform sampling; therefore, detailed procedures regarding sample acquisition are not provided.)

4.4.1 Sampler Preparation

- Decontaminate the sampler parts (cutting shoe, piston rod/tip, sample tube, liners) before assembly.
- Assemble the sampler by first placing the liner on the cutting shoe, then threading the liner/shoe assembly into the sample tube, then connecting the piston tip to the piston rod, and then finally inserting the piston tip/rod assembly into the sample tube. Tighten the cutting shoe with the shoe wrench.
- Thread the sampler onto the drive head. Thread the stop-pin onto the drive head (stop-pin holds the piston tip/rod in place while driving the sampler to the desired sample interval).

4.4.2 Sampling

- Using the percussion/probing machine, drive the sampler into the ground until the upper portion of the targeted sampling interval is achieved.
- Unthread and remove the stop-pin from the drive head using extension rods. This will activate the piston tip/rod.
- Drive the sampler through the targeted sampling interval to collect the sample. The piston tip/rod will retract as the sample enters the sample tube.
- Use the machine hydraulics to pull the sampler from the ground.

4.4.3 Sample Recovery

- Once the sampler has been removed from the ground, the sampler must be unthreaded from the drive head, then the cutting shoe unthreaded from the sample tube, and the liner/shoe assembly removed from the sample tube.

- Disconnect the cutting shoe from the liner which contains the soil sample. The recovered soil sample may now be viewed, logged, and extracted from the liner for analysis (refer to Section 4.5 for sample containment procedures).

4.5 Sample Containment

The following sections provide a general description of sample handling after removal from the samplers/sleeves. The Project Sampling Plan and QAPP should be consulted and followed for the site-specific sampling handling procedures and requirements.

4.5.1 General

- The soil sample can be removed from the liner following viewing and/or logging. Non-segmented acetate or Teflon liners should be cut with a utility knife into approximate 6-inch lengths to facilitate sample extraction or to isolate specific sample zones targeted for analysis. Segmented metal liners can be manually separated.

- Once the liner has been separated, the soil sample may be extracted from the individual liner segments with a spoon or spatula. Except for volatile organic samples (see below), the soil sample should be placed into a sample collection pan and homogenized, then placed directly into the required sample container.

- Once filled, the sample container should be properly capped, cleaned and labeled and placed in a cooler, per the QAPP. Sample chain-of-custody and preservation procedures should then be initiated.

- Perform equipment decontamination following containment of the sample.

4.5.2 Volatile Organic Samples

- Use of Teflon liners is preferred when sampling for analysis of volatile organic compounds (VOC) because these liners are more inert. In order to limit the potential for loss of volatiles, the soil sample should be removed from the liner as soon as possible after sample recovery. VOC soil samples should be selected from a central point within the liner unless another specific sample zone has been targeted. The liner should be cut with a knife and the sample immediately extracted and containerized. Clean and label the container and place it into a cooler immediately. Residual sample may then be used to fill other sample or logging requirements.

5.0 QUALITY CONTROL

Quality control requirements are dependent on project-specific sampling objectives. The site-specific QAPP will provide requirements for equipment decontamination (frequency and materials), sample preservation and holding times, sample container types, sample packaging and shipment, as well as requirements for the collection of various quality assurance samples such as trip blanks, field blanks, equipment blanks, and field duplicate samples.

6.0 DOCUMENTATION

Various forms are required to ensure that adequate documentation is made of sample collection activities. These forms include:

- Boring logs
- Field log books
- Sample collection records (optional)
- Chain-of-custody records
- Shipping labels

Boring logs (Attachment 1) will provide visual and descriptive information for each sample collected and are the most critical form of documentation generated during a soil sampling program. The field log book is kept as a general log of activities and should not be used in place of the boring log. Occasionally, sample collection records are used to supplement boring logs, especially for environmental samples which have been collected for laboratory analysis. Chain-of-custody forms are transmitted with the samples to the laboratory for sample tracking purposes. Shipping labels are required if sample coolers are to be transported to the laboratory by a third party (courier service). Original copies of these records will be maintained in the appropriate project files.

7.0 REFERENCES

Geoprobe™ Systems, August 1993, "1993-94 Equipment and Tools Catalog".

ATTACHMENT 1

EXAMPLE BORING/LITHOLOGIC LOG FORM

Site Sketch Map	Boring #: MW#: Sheet 1 of
	Project:
	Job #: Site:
	Logged By: Reviewed By:
	Drilling Contractor:
	Drill Rig Type/Method:
	Drillers Name:
	Borehole Diam./Drill Bit Type: Total Depth / Ref. Elev.
	Sampler Type:
Depth to 1st Water (▽): Time/Date:	Drill Start Time/Date: Drill Finish Time/Date:
Depth to Water After Drilling (▼): Time/Date:	Well Completion Time/Date:
Depth to other Water Bearing Zones:	Soil Boring Backfill Time/Date:

PID/OVA	Sample Interval	Recovered (in.)	Blow Counts / 6 in.	Retained for Analysis	Casing Type & Size	Annulus Filler	Depth (Feet)	USCS Soil Type	Soil Description	Estimated % Of: Gravel	Sand: Coarse	Sand: Medium	Sand: Fine	Silt/clay
							1							
							2							
							3							
							4							
							5							
							6							
							7							
							8							
							9							
							10							
							11							
							12							

QA/QC

Boring #: MW#: Project: Sheet of

PID/OVA	Sample Interval	Recovered (in.)	Blow Counts / 6 in.	Retained for Analysis.	Casing Type & Size	Annulus Filler	Depth (Feet)	USCS Soil Type	Soil Description	Gravel	Estimated % Of Sand: Coarse	Med.	Fine	Silt/Clay
							2							
							3							
							4							
							5							
							6							
							7							
							8							
							9							
							0							
							1							
							2							
							3							
							4							
							5							
							6							
							7							
							8							
							9							
							0							
							1							
							2							

QA/QC

APPENDIX A

NDEP COMMENTS ON THE BRC STANDARD OPERATING PROCEDURES AND BRC'S RESPONSE TO COMMENTS

Appendix A-1

1. General, there are a variety of errors and omissions throughout this document. As part of the response to this letter please generate an additional standard operating procedure (SOP) to be included in this document. The SOP should be titled "Quality Assurance and Quality Control for Submittals to the NDEP" and should discuss the procedures that will be implemented to improve the quality of documents that are submitted to the NDEP.

Response: *BRC has included SOP-0 titled* "Quality Assurance and Quality Control for Submittals to the NDEP*" to propose steps to implement to improved the quality of documents submitted to the NDEP.*

2. SOP-3, the NDEP has the following comments:
   a. Page 7, in the statement "4.937 (BD multiplier minus…", the multiplier should be 4.29.

Response: *BRC has revised the document accordingly.*

3. SOP-6, the NDEP has the following comments:
   a. Please note that the title page of this SOP differs from the title in the list of SOPs.

Response: *BRC has revised the list of SOPs to reflect the SOP title page.*

   b. Attachment 1 is referred to throughout the SOP, however, the attachment is blank. This is a problem throughout the document and is noted below in specific comments.

Response: *BRC has removed this attachment and provides a reference to the project Quality Assurance Project Plan (QAPP) which contains this information.*

   c. Section 4.2.1, page 3, BRC states "Sample containers will be filled with adequate headspace (approximately 90 percent) for safe handling upon opening, except containers for volatile organic compound (VOC) analyses, which will be filled completely with no headspace." 90% headspace for any sample is not consistent with normal sampling procedures; it is unclear why this much headspace is specified.

Response: *BRC has revised the text to clarify this issue.*

   d. Section 4.2.3, page 5, Attachment 3 is referenced here, however, Attachment 3 is blank.

Response: *BRC has revised the SOP to include Attachment 3, which now Attachment 1.*

4. SOP-11, page 5 last paragraph, the reference listed in this paragraph for Robertson et al. has a date 1988. There is no Robertson et al., 1988 reference in the reference section. There is a Robertson and Campanella 1986 reference. Please verify and correct this issue.

Response: *The references in this SOP have been corrected to reflect Robertson and Campanella 1986.*

5. SOP-12, the NDEP has the following comments:
   a. Section 1.1, page 1, please note that the use of Ziploc bags for soil moisture content samples can result in poor moisture content estimates. It is difficult to verify that the bags are completely sealed and stay sealed and the bags can easily be punctured. Normally, moisture content samples are placed in plastic or metal containers with tight fitting lids.

Response: *A note to this issue has been added to this SOP. It should be noted that this SOP was prepared by Dr. D. Wayne Berman, a recognized expert in the field of asbestos sampling and assessment.*

   b. Section 1.2, page 2, item 1, the acronym "ACM" is used without explanation. All acronyms should be explained at their first use. This issue should be corrected throughout the report and additional instances will generally not be repeated in this letter.

Response: *All first instances of acronyms and abbreviations have been defined.*

   c. Section 1.2, page 2, item 3, In the first sentence a volume of magnitude 125 is specified, however the units are "cm". Please correct this issue.

Response: *This issue has been corrected.*

6. SOP-14, Attachment 6 is supposed to contain forms, however, it is blank.

Response: *BRC has revised the SOP to include Attachment 6.*

7. SOP16, the NDEP has the following comments:
   a. Page 16, the 1st sentence states "Flux measurements will be conducted on solid and liquid livestock waste materials." It appears that this SOP was generated for another project that involved livestock wastes and was not given an appropriate QA/QC check prior to inclusion.

Response: *BRC has revised the SOP to delete the text.*

b. Page 17, 2nd paragraph, the acronym "OVA" is used without explanation, see comment above.

Response: *BRC has revised the SOP to define OVA.*

c. Page 17, last bullet, in the procedure for data collection the last instruction is, "Monitor the gas concentrations and record data every residence time." Specify where in the system and with what instrumentation the gas concentrations are being monitored.

Response: *The monitoring instrumentation has been provided. It should be noted that this SOP was prepared by Dr. C. E. Schmidt, a recognized expert in the field of soil vapor flux sampling.*

d. Figure 5-1, the example form appears to be incomplete. Column labels for temperatures and gas concentrations are missing. Additionally the page number is missing.

Response: *This figure has been corrected and is now Attachment 1.*

e. Section 6.0, the page numbering for the SOP begins at Page 1 again at Section 6.0. Page numbering of an SOP should be consecutive and non-redundant.

Response: *The page numbering has been corrected.*

f. Section 8.3, 1st paragraph, last sentence, the sentence reads, "Reanalysis or resembling may be recommended at this time if data are determined to be unacceptable…" Did the author intend, "Reanalysis or <u>resampling</u> may be recommended…"? (underline added for emphasis Please correct this issue.

Response: *This sentence has been corrected.*

g. Section 9.0, page 10, please explain what the term "malls" refers to in the last sentence of this section.

Response: *This has been corrected to read 'MDLs'.*

h. Section 9.3, page 17, this section refers to the commercial laboratory QUALITY MANUAL (July 2001) as being attached to the SOP. The QUALITY MANUAL (July 2001) is not appended to the SOP.

Response: *This has been corrected. The reference is now to the laboratory manual included in the project QAPP.*

8. SOP-19, page 1, last paragraph, BRC refers to decontamination procedures while the topic of the SOP is Borehole Abandonment. The paragraph should be revised to reflect the focus on borehole abandonment.

Response: *This paragraph has been corrected.*

9. SOP-29, the NDEP has the following comments:
   a. Section 3.0, page 4, it is suggested that the location (including map) and phone numbers for the closest hospital and fire department be included.

Response: *This information is provided in the project Health and Safety Plan. A reference to this plan has been added.*

   b. Section 8.1, page 17, item 12 BRC should define FOL, see previous comments regarding acronyms.

Response: *This term has been replaced with 'Project Manager.'*

   c. Section 9.0, the References section includes a full description for the OSHA document referred to in Section 1.0 but does not include the information for DOT and EPA listed here.

Response: *This information has been provided.*

10. SOP-32, the NDEP has the following comments:
   a. General, please explain if each XRF value is an average of several readings or single readings. Providing this type of information can help with the development of a data analysis approach.

Response: *Because of limitations with XRF sampling, and it's inappropriateness for use for the project, this SOP has been removed.*

   b. General, please explain how the laboratory results will be used with the field XRF data. Will the results be evaluated for correlation? Will the field results be adjusted based on laboratory results? Some discussion should be included in this SOP to understand how all the data will be assessed.

Response: *Because of limitations with XRF sampling, and it's inappropriateness for use for the project, this SOP has been removed.*

   c. Section 7.2.3, pages 10 and 11, the detection limit equation needs clarification. Is D.L. = [3*(2*BC)^0.5 * (concentration of standard)]/standard net count or is (2)^0.5 a factor?

What parameters require the square root to be taken? Are the numbers, 3 and 2, factors? The equation as written is confusing, please clarify.

Response: *Because of limitations with XRF sampling, and it's inappropriateness for use for the project, this SOP has been removed.*

d. Section 7.2.3, pages 10 and 11, the signal to noise equation and text is also confusing. Is the numerator (total signal + the background)^0.5 or is only the total signal taken to the ½ power? What is meant by "Use the following equation to determine the percent signal acceptance (which should be 10 percent)." 10 percent of what? This acceptance criterion is unclear, please clarify.

Response: *Because of limitations with XRF sampling, and it's inappropriateness for use for the project, this SOP has been removed.*

11. SOP-35, Section 6.0, page 5, step 3, BRC states, "Place blue ice packs around soil and water samples to maintain necessary temperatures during shipment." However, in SOP5, Section 4.7.1, page 21 BRC states, "Frozen blue ice" is not recommended. In SOP 6, Section 4.3.2, page 11 BRC states, "In addition, experience has shown that blue ice is inadequate to maintain sample temperature and it will not be used for sample preservation." BRC should take a consistent approach to ensuring sample temperature during shipment.

Response: *References to blue ice have been removed. In addition, a consistent approach to maintaining sample temperature during shipment has been implemented.*

12. SOP-36, Section 3.0, page 2, BRC refers to Table 1 and Table 2 in Attachment 1. This attachment was not included with the SOP.

Response: *Reference to these tables is now to the ASTM guidance, and references to an attachment have been removed.*

13. SOP-37, the NDEP has the following comments:
    a. Section 4.1.1, page 5, please be advised that including a reference or table of appropriate container types would be valuable to this part of the SOP.

Response: *Reference to the project QAPP, which contains sample container requirements, has been provided.*

b. Section 4.4.1.1, pages 9 and 10, BRC states "Coelution of the target analytes is not acceptable unless the compounds are distinguished and quantified by two different types of detectors in use at that time." Coelution should have some quantitative definition (or reference to one) so that the analysts can determine when a problem exists.

Response: *Comment noted; however no change has been made to the SOP. This language is from a State of California guidance document and no other definition is provided. Although this SOP has been included, it is unlikely that this procedure will be used at the site. Instead vapor flux per SOP-16 will be conducted. Should BRC use active soil gas investigations, this SOP will be revised in a future work plan.*

c. Section 4.4.1.3, page 12, the first full paragraph on page 12 discusses the need to reanalyze samples when the concentration of constituents exceeds 50% of the highest concentration of the calibration range. The reason for this criterion is unclear, if a calibration model has been determined acceptable (e.g. via an r^2 or other specification) why should samples not exceed 50% of the highest level. This criterion should be clarified.

Response: *Comment noted; however no change has been made to the SOP. This language is from a State of California guidance document and no other definition is provided. Although this SOP has been included, it is unlikely that this procedure will be used at the site. Instead vapor flux per SOP-16 will be conducted. Should BRC use active soil gas investigations, this SOP will be revised in a future work plan.*

d. Section 4.4.1.3, page 12, in the second full paragraph on page 12 the SOP states, "Surrogate analysis and second column confirmation are not mandatory." Does this only apply to GC/MS analyses or all GC analyses? The reason for not using second column confirmation needs further clarification. If this is meant to apply to GC analyses the dropping of second column confirmation should be justified.

Response: *The issue of second column confirmation is addressed in Section 3.4.1.2, therefore, this sentence has been removed.*

e. Section 4.4.1.3, page 12, in the fourth full paragraph on page 12 the SOP states, "If high VOC concentration in an area is known from previous soil gas analysis the procedures specified in this SOP regarding high concentration samples are not necessary when analyzing samples from the area in question." It is unclear what is meant by "…the procedures specified in this SOP regarding high concentration samples…" No such delineation for "high concentration samples" is specified in the SOP. Also, please discuss what procedures are not required for high concentration samples, and why they would be exempt.

Response: *This sentence has been removed from the SOP.*

f. Section 4.4.1.4, page 16, the bullet that begins with "Environmental Sample" indicates sample concentration should be specified in µg/L. Gas concentrations should also specify temperature and pressure when these units are used. If the analyses assume nominal temperature and pressure or standard temperature and pressure (e.g. STP) this should be

stated. Also, the data reporting should include a quality assurance summary and an explanation of any qualifications with the data.

Response: *A bullet listing "Sample temperature and pressure (if gas sample is collected)" is listed immediately below reference to Concentration in µg/L. Also, data validation and qualification procedures are described elsewhere (e.g., the project QAPP).*

Appendix A-2

1. General Comment, it is the NDEP's assumption that the SOPs have not changed, outside of the changes detailed in the response-to-comments (RTC) letter. If this is not the case, please discuss this matter with the NDEP.

Response: *NDEP is correct. Other than the following: standard formatting changes for consistency; abbreviation and spelling corrections; page numbering corrections; corrections to references; and corrections to ensure consistency between the SOP titles and the SOP list, no other changes were made to the document.*

2. General Comment, please consider including an SOP for PID screening techniques. This SOP should describe the selection of bulbs for the PID and how this selection correlates to the site-related chemical (SRC) list. Limitations of this technique should also be discussed (due to high ionization potentials of certain contaminants at the site). This SOP could be expanded to include the use of Draeger tubes or other screening techniques, if applicable. It is the belief of the NDEP that this SOP is necessary and should be tied to SOP-37; the project Health and Safety Plan (HASP); and other applicable SOPs. This new SOP should list the other SOPs that need to reference this SOP.

Response: *SOP-39, titled "Photoionization Detector (PID) Screening Procedure", has been added to the list of SOPs and SOP document.*

SOP-39 contains the following text regarding other SOPs that have reference the use of PIDs: "Other SOPs that reference use of PIDs are SOP-3 (Groundwater Monitoring Well Development), SOP-13 (Operating and Calibration Procedures - Field Equipment), SOP-14 (Field Documentation), SOP-17 (Soil Logging), SOP-18 (Soil Sampling for VOCs Using EnCore™ Samplers), SOP-30 (Field Analytical Procedure), and SOP-37 (Active Soil Gas Investigation)."

In addition, the following has been added to each of the seven SOPs that reference use of PIDs: "(Note: see SOP-39 for additional information on PID principles and procedures.)"

3. General Comment, Introduction, this section should discuss how this document fulfills the requirements of a field sampling plan (FSP) as described by the USEPA. Please include references to the applicable reference materials. It is the preference of the NDEP that this document is referred to as an FSP in the future (for compliance with USEPA guidance).

Response: *The title has been changed to 'Field Sampling and Standard Operating Procedures' to reflect its content. In addition, text has been added to the Introduction that references the following USEPA guidance documents regarding FSPs:*

USEPA. 1988. Guidance for Conducting Remedial Investigations and Feasibility Studies Under CERCLA. Interim Final. EPA/540/G-89/004. Office of Emergency and Remedial Response, Washington, DC. October.

USEPA. 2001. Guidance for Preparing Standard Operating Procedures (SOPs). EPA QA/G-6. EPA/240/B-01/004. Office of Environmental Information, Washington, DC. March.

USEPA. 2002. Guidance on Choosing a Sampling Design for Environmental Data Collection for Use in Developing a Quality Assurance Project Plan. EPA QA/G-5S. Office of Environmental Information, Washington, DC. December.

USEPA. 2006. Guidance on Systematic Planning Using the Data Quality Objectives Process. EPA QA/G-4 . Office of Environmental Information, Washington, DC. February.

Reference to field sampling plans, and the required elements of such plans, has also been added to the Introduction section. In addition, Section 2 References, has been added to the document.

4. SOP-0, Quality Assurance and Quality Control for Submittals to the NDEP, the NDEP has the following comments:
   a. General comment, please add a step to the review process to include the development of a tracking mechanism to document which team members completed quality checks on the submittal. This documentation should be included in all future submittals as a sheet behind the CEM jurat. In addition, it is requested that the CEM jurat page be dated by the project CEM when it is signed.

Response: *The following sentence has been added to the final paragraph of this SOP "Sign-off by team members who have completed quality checks on the document shall be included on a sheet behind the CEM jurat." The SOP already states in the 2nd to last paragraph, regarding the CEM jurat, that "…the date on which the document was signed, …".*

   b. Section 3.0, the SOP specifies that the reviewer will check drawings for "gross errors". It is requested that the reviewer check the drawing for "errors" not "gross errors" exclusively.

Response: *The word 'gross' has been removed.*

   c. Section 3.0, it is recommended that the reviewer check the drawings versus all applicable tables and text. Drawings should correlate to the information being described in the tables as text.

Response: *The first bullet of Section 3.0 has been changed to: "Review of all project drawings and designs to identify errors; conflicts between drawings, tables, and text; and omissions in detail, dimensions, and identification."*

   d. Section 4.0, please note that NDEP comments should be reviewed prior to generation of any part of the submittal. This SOP states that "review comments, along with comment responses, shall be reviewed prior to submitting comment responses to the NDEP." It is

the belief of the NDEP that this statement does not properly weight the importance of the review of the NDEP's comments. In addition, the entire document (calculations, drawings, text) should be checked to determine compliance with the NDEP's comments and BRC's responses, prior to submittal.

Response: *The following sentence has been added to the final paragraph of this SOP "In addition, the entire document (including calculations, drawings, and text) shall be checked to determine compliance with the NDEP's comments and BRC's responses, prior to submittal."*

5. SOP-16, the NDEP has the following comments:
   a. BRC has not responded appropriately to the NDEP's previous comment #7a dated February 1, 2006. The bullet has not been revised and no reference is provided for the reviewer to determine where to locate the documentation regarding the instrumentation that is being used. BRC states that "The monitoring instrumentation has been provided. It should be noted that this SOP was prepared by Dr. C.E. Schmidt, a recognized expert in the field of soil vapor flux sampling." The response should have stated that "The monitoring instrumentation has been provided in Section xx.xx and the bullet has been revised to include a cross-reference." Additionally, please note that Dr. Schmidt's credentials were not in question as part of this comment and the statement provided by BRC is not an appropriate response.

Response: *We believe the comment is referring to NDEP's previous comment #7c. The following is the revision that was made to Section 5.2, page 14, 6th bullet, based on this previous comment "Monitor the outlet gas concentrations using an OVA and record data every residence time". As stated previously in this section (1st paragraph of page 14) "The outlet line will include a sampling manifold for monitoring and/or collection of the gaseous specie of interest."*

   b. Section 6.4, page 19, please verify that the specified laboratories are included in the project QAPP, as applicable.

Response: *Because of NDEP laboratory-certification requirements, it is anticipated that STL will be used for all air sample analyses. SOP-16 text has been revised to reflect the use of STL rather than Environmental Analytical Services (EAS) and Radon Testing Corporation of America.*

6. SOP-38, the certificate of calibration that is provided as an attachment to this SOP is past due. Per the SOP, calibrations should be performed annually, at a minimum. Please insure that the equipment is properly calibrated prior to use.

Response: *Comment noted. The equipment will be properly calibrated prior to use.*

Appendix A-3

1. SOP-39, the NDEP has the following comments:
   a. Section 1.0, it appears that it may be appropriate to develop a SOP-40 for FID screening procedures. Please discuss this matter with the NDEP.

Response: *A flame ionization detector (FID) is useful for quantifying combustible substances; however, based on site knowledge for the Eastside, CAMU, and other BMI Common Areas, it is not anticipated that conditions will be encountered that require the use of FID screening procedures. Should our understanding of the site change, a SOP for FID screening procedures will be developed.*

   b. Section 1.0, HNU is not defined prior to use.

Response: *HNU is a company name, there is no definition for it. However, HNU has been replaced with 'PID instrument' in the SOP.*

   c. Attachment 1, several of the ionization potentials that are listed appear to be incorrect, examples are provided below:

Response: *Attachment 1 has been corrected. The primary source for ionization potentials is now the National Institute of Standards and Technology (NIST) Chemistry WebBook (http://webbook.nist.gov) as footnoted in the attachment.*

Appendix A-4

Response to NDEP Comments on SOP-16 Flux Chamber Source Testing dated July 26, 2006

Section 1.0 - Introduction

The SOP does not address how the data will be applied in the post-remediation health risk assessment (HRA). It would be useful for all parties to document (in this SOP ***or*** in Chapter 9 of the Closure Plan) how the flux chamber data (VOCs and radon) will be used in the HRA.

Response: *VOC and radon flux data collected from the site under current, pre-remediation conditions, provides baseline air pathway analysis data useful for predicting exposure from site contamination to receptors prior to remediation (i.e., surface emissions and transport via ambient air to receptors on site or off site), or to receptors in structures on site without remediation. In other words, these data, with the exception of exposure scenarios that include baseline site conditions or no-action alternatives, are not useful for the post-remediation HRA. For instance, if there is an area of the site where the no action alternative is selected, then these present site conditions data or baseline assessment data are directly applicable to estimating exposure, such as vapor intrusion into future buildings. But if an area of the site is identified for a remedial action, then the baseline flux data collected in this investigation will have no application for the post-remediation HRA, and post remediation flux data will have to be collected after the selected remedial action is completed. This information has been added to Section 1.*

Section 2 – Project Description

Page 2, last paragraph – "There is no data available that might be used to direct the selection of test locations for radon testing other than potential effluent disposal information." Soil matrix data and groundwater data should be used to guide flux chamber sample locations for radon.

Response: *Originally, the concern for actual radon exposure was low and the radon testing was offered at the selected VOC test locations for radon flux screening at collocated screening locations. Static headspace samplers are going to be used for this purpose, and there is really no scientific reason for co-locating the radon sampling activities. Given this request, the radionuclide soil data will be reviewed and unique test locations for radon screening will be identified. The radon test locations will be provided in the Field Sampling Plan (FSP). The SOP has been modified accordingly.*

The text indicates that VOC flux data will be used to assess/identify radon flux locations. Please clarify the intent and/or provide rationale that VOCs and radon in subsurface sources are likely to be co-located.

Response: *As stated above, the reason for co-locating radon and VOC test locations were for sampling convenience given that the radon sampling activity was considered a screening-level exercise. New radon test locations will be presented in the FSP for both static and dynamic flux chamber testing which are based on the radionuclide data base. The text has been changed accordingly.*

Page 4, Item Number 3. – Please provide further information (including reference citations) regarding the role of the "other" flux chamber studies that have been conducted that will be "directly" comparable to the data collected.

Response:

1) Case Study in USEPA User's Guide; Section 4
2) See list below.

Note that the intent of this comment was to say that flux data collected by the USEPA flux chamber technology can be used in a similar fashion to other collected data, and can be used to compare site specific data from one site to another, if that meets the needs of the program. For instance, this may be of use in assessing potential remedial options. The list of references below with annotation provides information on a case study basis that may be of interest. A similar comment to this effect has been added to Section 2.

Schmidt, CE, "Evaluating Direct Measurement Approaches Used for Assessing Potential Air Pathway Impacts to Occupants in Structures Over Subsurface Sources", AWMA Symposium on Air Quality Measurement Methods and Technology, San Francisco, California, April, 2005.
This work demonstrates the utility of applying the EPA multi-tiered assessment approach; Tier III technologies show that the Tier II assessment using soil gas and predictive modeling demonstrated an incomplete pathway.

Stelljes, Mark, CE Schmidt, "Assessing Potential Air Pathway Impacts to Occupants of Future Structures in Cold Climates Using Predictive Modeling and Surface Flux Measurements on Undeveloped Sites", AWMA Symposium on Air Quality Measurement Methods and Technology, San Francisco, California, April, 2005.
A case study is presented where an APA was conducted in a cold climate region prior to the construction of building on a site with a contaminated groundwater plume.

Leet, R. CE Schmidt, "Case Study- Tier 3 Assessments of Potential Risks to Occupants of an Office Building Over a Groundwater Contaminated Plume Via the Indoor Air Pathway," Paper No. 455, Proceedings of the 97th Annual Meeting of the Air and Waste Management Association, Indianapolis, Indiana, June, 2004.
This paper reports the use of Tier III APA data for assessing exposure via soil gas to occupants in a structure over a contaminated groundwater plume.

Babyak, A., CE Schmidt, "Using EPA's Dynamic Flux Chamber to Measure Vapor Flux from Subsurface Sources, Dealing with Regulatory Buy-In: Two Case Examples in California," Paper

No. 219, Proceedings of the 97th Annual Meeting of the Air and Waste Management Association, Indianapolis, Indiana, June, 2004.
This paper presents two case studies where an APA was performed to define vapor intrusion from gasoline station sites.

Schmidt, CE. A. Babyak, "Comparison of Static Chamber and Dynamic Chamber Technology for Assessing Infiltration of Soil Gas into Structures," Paper No. 277, Proceedings of the 97th Annual Meeting of the Air and Waste Management Association, Indianapolis, Indiana, June, 2004.
This paper is a technical discussion that compares the utility of static and dynamic flux chambers for assessing vapor intrusion.

Kick, R., CE Schmidt, JD McDermott , "Case Study- Assessing Potential Air Pathway Exposure to Occupants in Structures Over Groundwater Impacted by Volatile Organic Compounds Using Environmental Data Collected on Public and Private Property," Paper No. 279, Proceedings of the 97th Annual Meeting of the Air and Waste Management Association, Indianapolis, Indiana, June, 2004.
This paper describes an APA conducted in a neighborhood over a contaminated groundwater plume.

Richter, Rich, Schmidt, C.E., "Assessing Realistic Risk to Indoor Occupants from Subsurface VOC Contamination," Paper No. 69, Air and Waste Management Association Symposium on Air Quality Measurement Methods and Technology, San Francisco, California, November 13-15, 2002.
This paper is a case study where an APA was performed in order to evaluate the potential health risk to residents in a housing complex over gasoline plume in groundwater.

Boehnker, David, John Tiffany, Schmidt, C.E., "Estimating Exposure to Residents With Basements Using Measured Surface and Subsurface Flux Data," Paper No. 67, Air and Waste Management Association Symposium on Air Quality Measurement Methods and Technology, San Francisco, California, November 13-15, 2002.
This paper presents an APA was designed and conducted to assess potential impact to occupants in structures with basements over a subsurface source, without testing in the structures.

Bejorklund, Brian, Schmidt, C.E., Robin Streeter, "Air Pathway Analysis Characterizing Potential Exposure from a Dissolved-Phase Groundwater Plume using Direct Flux Measurement," Paper No. 64, Air and Waste Management Association Symposium on Air Quality Measurement Methods and Technology, San Francisco, California, November 13-15, 2002.
A case study is presented where an APA is conducted in a neighborhood located over a contaminated groundwater plume.

Schmidt, C.E., Teri Copeland, Jim Van de Water, Michael Manning, "Predicting Potential Exposure fro the Occupants in Future Buildings Using Direct Measurement and Predictive Modeling Techniques," Paper No. 43141, 95th Annual Meeting of the Air and Waste Management Association, Baltimore, MD, June, 2002.

This paper presents the work that can be performed for assessing the exposure to occupants' in the future building scenario using APA.

Schmidt, C.E., Jared Rubin, AIndoor Infiltration Assessments of VOCs from Contaminated Groundwater Using the US EPA Flux Chamber≅, Paper No. 446, 93rd Annual Meeting of the Air and Waste Management Association, Salt Lake City, Utah, June, 2000.
This paper is a case study reporting an APA applied to a regional contaminated groundwater plume for exposure assessment purposes.

Schmidt, C.E., et. al., "Comparison of Measured Versus Modeled Surface Flux of VOCs from Contaminated Groundwater≅, Paper No. 447, 93rd Annual Meeting of the Air and Waste Management Association, Salt Lake City, Utah, June, 2000.
This paper compares measured to modeled flux rate data for a subsurface source.

Schmidt, C.E., Teri Copeland, Rich Pesin, "Comparison of Measured and Modeled Emissions from Subsurface Contamination at an Industrial Site in a Residential Neighborhood", 98-WPC.01, 91th Annual Meeting of the Air and Waste Management Association, San Diego, California, June, 1998.
This paper compares measured to modeled flux rate data for a subsurface source.

Schmidt, C.E., T.F. Zdeb, "Direct Measurement of Indoor Infiltration Using the US EPA Flux Chamber and Dispersion Modeling", 98-TA9C.01, 91th Annual Meeting of the Air and Waste Management Association, San Diego, California, June, 1998.
This paper describes a comprehensive site assessment where the USEPA flux chamber technology was used to assess vapor intrusion though a slab.

Schmidt, C.E., A.S. Johnson, "Technical Approach Developed to Assess the Volatilization and Migration of Volatile Organic Compounds From Contaminated Ground Water." Proceedings of the 1989 EPA/AWMA Symposium on Measurement of Toxic and Related Air Pollutants, Raleigh, North Carolina, May 1989.
This paper describes the APA approach used to assess the volatilization of compounds from a subsurface source.

Johnson, A.S., C.E. Schmidt, R. Vandervort. "Indoor Air Sampling for Volatile Organic Compounds Associated with Environmental Contamination," Proceedings of the Third Annual Hazardous Materials Management Conference and Exposition, Anaheim, California, April 1986.
This paper presents indoor air sampling for the purpose of assessing indoor air exposure from subsurface sources.

<u>Section 2, Page 6 – Calculation of Flux Data</u>

This section should be titled, "Calculation of Flux Rate". The text in this section should read as follows: "The compound-specific flux rate will be calculated using (1) the laboratory data for compound concentration in the flux chamber Summa canister (ug/m3; pCi/m^3), the sweep air inflow rate (L/min), and the surface areas of the chamber (0.13 m^2). The calculation result gives a direct measure of the flux rate of compounds (ug/m^2-min) from a given surface.

Response: *Agreed. The changes to the text as provided include adding the information for the radon calculation for both the static and dynamic flux chamber using the flux unit format as requested.*

It would be helpful to include any unique calculation parameters for the calculation of radon flux.

Response: *Agreed, and a calculation for radon has been added. As far as the laboratory data for radon, the analysis of the activated charcoal canisters left over a 24-hour time period is reported in pCi/L which is simply 0.001 pCi/m^3 (1000 liters in a cubic meter). We will use the radon concentration as reported from the laboratory in the equations provided in the SOP.*

Section 2.5 – Calculation of Total Emission Rate

Please edit this section as follows: The emission rate (ug/m^3 or pCi/m^3) of compounds from a land surface area will be…

Response: *Agreed. Changes made to SOP.*

Please provide additional information regarding the calculation of radon flux from static chamber data. Also, please provide information as to how dynamic flux chamber data will be used for radon.

Response: *The calculation of radon flux, for both the static and dynamic chamber testing is provided above. Likewise, the calculation of VOC and radon emissions (flux times surface area) is also provided as indicated.*

Regarding how the data will be used; the flux data for radon will be used first to identify the presence of radon beyond background levels, then secondly, provide input for the evaluation of exposure. Further, the dynamic flux chamber measurement made with a USEPA chamber, taken at a colocated location with a static measurement, will be used to develop a correlation between the static chamber and dynamic chamber measurement. It is not known how these measurements will compare, given that most radon exposure work is conducted by using the activated charcoal samplers in an existing building over a 24-hour exposure time period. It is possible that both the static chamber (screening level by choice of technology) and dynamic chamber radon flux data will both show 'non-detection' for radon. As such, the conclusion will be that radon is not a concern for the HRA. If, however, radon is detected, in both the static chamber tests and dynamic chamber tests, it is likely that the static chamber concentration data will be used as an exposure concentration in a HRA, and the dynamic chamber radon flux data will be used in an exposure scenario with a given building intrusion fraction and ventilation rate.

Comments to this effect have been added to the SOP

Section 4 – Quality Assurance Objectives

Table 1 – first box: Please confirm the total number of TO-14 target compounds (2?).

Response: *The correct compound number is 12. This change has been made to the text.*

The SOP should clarify which analytical method will be used (TO-14 or TO-15). The SOP provides a list of the TO-15 analytes and method detection limits. If EPA Method TO-14 is used, please list the analytes, method detection limits, and method-specific QA/QC procedures (e.g., please explain if TO-15 QA/QC criteria be applied for TO-14 analyses).

Response: *Both TO-14 and TO-15 will be used for the program. The difference has to do with sample preparation and operating mode of the detector. The TO-14 will be used with a sample dryer and will be operated in the selective ion mode, and the TO-15 does not use a dryer and will be operated in the full scan mode (more species including polar species at higher detection limits). These two analytical methods will achieve the program objectives of scanning for many species and providing low detection limits for key species. Appropriate analytical clarification and protocols have been added to the SOP.*

Table 2 -Measurement Quality Objectives. The precision value is +-30% (also found in the table in Attachment 3), yet the text in Section 4.1 says <50% RPD and Attachment 4 contains a Table that uses the <50% value. These are inconsistent and should be clarified. Also, it is unclear what is meant by Field Quality Control in Attachment 4 when the table deals with results obtained in the laboratory.

Response: *The total inaccuracy and total imprecision for the testing is additive; analytical and field sampling. We assess analytical precision and accuracy is determined from laboratory QC- from standards in the laboratory (lab duplicate analysis and spike recovery) and these limits are ±30%. The total inaccuracy and imprecision are determined from field QC- field spikes (if part of the program) and field replicate samples. The criteria for total (field and lab) accuracy and precision is ±50%. Some clarification has been added to the SOP. Note that a table of lab QC specifications has also been added to the text.*

Page 9 – First paragraph after the bullets. Reference is made to "offsite" analysis. Please clarify why offsite data will be subjected to a different analytical reporting level than onsite data.

Response: *Onsite data have different QC criteria and reporting levels than off site data. The field data are for screening level analysis collected by crude (by comparison) analytical techniques were the offsite analysis is as 'good as it gets'. The quantitative data are the offsite analytical data.*

Section 4.3 – Representativeness

A key component of representativeness for HRA is documentation of adequate spatial coverage for exposure assessment. Considerations include source information, area-specific results, and future human receptor location information. No mention is made of this aspect of representativeness. Please clarify.

Response: *Correct. The representativeness of these data can only be assessed after the data are collected and evaluated. For most SOPs, the discussion of representativenss of the data refers to each point where data are collected and not the overall representativeness of the data. It is possible that the highest VOC and radon flux be selected for the HRA as 'representative' meaning that some expectation of high values, say 90% C.L. has been achieved. There is probably no value in generating a representative 'average' per area tested given that the highest value makes the most sense as input to the HRA. However, as stated in the SOP, these data will be evaluated and follow-on data will be collected to meet the data objectives of the program. The FSP will address data representatives in comparison of the project objectives.*

Section 5.1 – Static Chamber Technique for Radon

Page 12 – Please insert text as follows: "For this study, assessment of radon gas will be performed using both the USEPA recommended emission flux chamber ***and a static chamber method***, however…."

Response: *Agreed. Change made to the SOP.*

Page 12 – Please provide the citation for the USEPA static headspace chamber.

Response: *Citation provided below. Note that USEPA recommends this approach for screening-level analysis; they provide several options for static chamber flux testing.*

1. USEPA. *Office of Air Quality Planning and Standards, Air Superfund National Technical Guidance Study Series, Volume 2: Estimation of Baseline Air Emissions at Superfund Sites;* Interim Final, EPA-450/1-89/002, 1989, pp.60-63.

Page 12 – Please provide the conversion factors for 0.1 pCi/L radon = surface flux of 100 pCi/m2-min. Also, please note that, for flux units, when "minute" [min] is in the denominator, the " $^{-1}$ " should not be included.

Response: *Note that there was an error in the text. The calculation is as follows:*
(0.1 pCi/L)(1000 L/m^3) or 100 pCi/m^3 concentration in the flux chamber, resulting in a radon flux of: (100 pCi/m^3)(0.019 m^2)/(1,440 minutes)(0.067 m^2) = 0.020 pCi/m^2-min. The change has been made in the SOP.
(Note that the 'flux unit' has historically been written as ug/m^2,min^{-1} to avoid confusion, and ug/m^2-min is certainly acceptable.)

Section 5.2 – Surface Emission Isolation Flux Chamber Sampling

Page 12 – Please make the following edit: "Isolation emission flux chamber sampling is a ***dynamic*** direct measurement.

Response: *Agreed. Change made to the SOP.*

Page 14, first full paragraph, second sentence. Please make the following edit: "The sweep air is added ***at*** a flow… Also, please provide additional detail regarding "the TVA-1000".

Response: *Agreed. Change has been made to the SOP.*

The TVA-1000 is a real time hydrocarbon analyzer that measures the total organic content by flame ionization detection (FID) and photoionization detection (PID). The FID sees all carbon containing compounds including methane to some response level and generally results in the higher accounting of 'total hydrocarbon' concentration. The PID responds to compounds that have ionization potentials less than the detector lamp and can be used to define a subset of hydrocarbon compounds such as aromatic compounds, chlorinated compounds, and compounds with unsaturated carbon-carbon bonds. Comparing FID or 'total' hydrocarbon response to PID or 'ionizable' hydrocarbon response has utility in understanding similarity in field test data from test location to test location.

Section 5.3 – Sampling for VOCs/Radon in the Flux Chamber

Page 15, 3rd full paragraph. Please provide additional information regarding the criteria for when TO-14 SIM analysis will be conducted.

Response: *The criteria for selection and those locations selected for analysis by TO-14 (SIM) and TO-15 full scan will be identified in the FSP. An additional comment to this effect was added to the SOP.*

Page 16. Please provide additional information regarding the use of radon data from dynamic chambers.

Response: *Addressed in prior comments.*

Section 8.3 – Data Validation

This section describes the general approach for data validation; however, it does not describe (or reference) the guidelines that will be used to determine when data should be flagged. For example, will data be flagged if the holding times are exceeded? The SOP should be more specific as to how the data will be qualified for the items that will be reviewed (e.g., what

guidance will be used). One option is to state that qualification would generally follow the EPA National Functional Guidelines, even though these are not specifically written for air methods.

Response: *Agreed. The data validation process is one where the USEPA National Functional Guidelines will be followed as applied systematically to the APA data set. The following data qualifiers may be used, depending on the data set:*
B- compound found in the laboratory or method blank sample
U- compound reported at less that method detection limit
J- compound reported at above method detection limit but below reporting limit
E- compound exceeded instrument calibration range

These data qualifiers have been added to Section 8.3 of the SOP.

Section 8.4 – Reporting

Page 22. Please add the following to the list of bullets:

- Non-detect results will be recorded as "< [reporting limit]".

Response: *Agreed. The addition has been made to the SOP.*

Note that a more useful approach is to flag data as 'U' (written after the method detection limit number in a separate column in the data table) for non-detect, 'J' for data reported between method detection limit and reporting limit, and 'no flag' for data reported above reporting limit. This would provide for a complete reporting and qualifying scheme. Data below reporting limit are useful but may not be selected for use quantitatively.

Note that additional data qualification may be useful, including criteria that include the flux chamber system blank data and background data, if appropriate.

Section 9.0 – Analytical Procedures and Calibration

Please provide detail regarding the specific data reported by the lab and whether or not additional calculations are made (for VOCs and/or radon) for reporting flux rate.

Response: *The laboratory reports the VOC data in ppbv and ug/m^3, and the radon laboratory reports data in pCi/L. Our data reporting will calculate flux with spread sheet calculations footnoted per sheet.*

This comment has been added to Section 9.0 of the SOP.

Section 9.3.2 – USEPA Method TO-14

Page 26. Please provide rationale for the proposed TO-14 SIM analytes. The target TO-14 SIM analytes should represent the most toxic (i.e., requiring the lowest reporting limits) site-related VOCs. In general, non-carcinogens will not require SIM analysis.

Response: *The TO-14 target list is a project list of compounds selected for low level detection for a variety of reasons, including abundance in groundwater and toxicity. BRC is open to suggestion regarding the proposed TO-14 SIM or low level analysis list. Note that MDLs have been revised and reporting limits added to the SOP.*

Section 9.4 – USEPA Recommended Method for Measuring Radon Gas in Air with Charcoal Canisters

Page 27. Please provide a description of the AC canister and a full citation for USEPA, April, 2001.

Response: *Further description has been added to the text, however, there isn't much to add. The small, cylindrical activated canister is simply opened and suspended inside the test chamber. After the sampling or exposure time period, the canister is resealed and shipped to the laboratory. As far as the protocol, the citation for the protocol, the USEPA Guidance is found on the USEPA web site. We can include a hard copy of the document, along with an updated version, which has not changed for charcoal canister sampling. Additional information has been added to the SOP.*

Section 10 – Internal Quality Control and Attachment 3

Please clarify that USEPA Method TO-15 quality control criteria will be met.

Response: *Agreed. A comment has been added to the text.*

Section 12 – Preventative Maintenance Procedures

Page 32. The only field equipment discussed is the rotometer. Are preventative maintenance procedures relevant to the flux chamber and other associated equipment?

Response: *Correct; the only preventative maintenance relevant to flux chamber testing is the rotometer device. The balance of the equipment, provided it meets USEPA specifications at the time of testing, require no preventative maintenance other than method cleaning procedures.*

Section 16 – References

Page 38. Please include in this section full references for the following citations:

Dixon, W.J., 1953.
W.J. Dixon, "Processing Data for Outliers," Biometrics, 1953, Vol. 9, No. 1, pp. 74-89

USEPA, 1986. Measurement of Gaseous Emission Rates From Land Surfaces Using an Emission Isolation Flux Chamber, Users Guide. EPA Environmental Monitoring Systems Laboratory, Las Vegas, Nevada, EPA Contract No. 68-02-3889, Radian Corporation, February. (available as pdf file on the web site www.ceschmidt.com)

USEPA, 1986. Validation of Flux Chamber Emission Measurements on a Soil Surface. Draft Report. Prepared for: Shelly J. Williamson, USEPA, Environmental Monitoring Systems Laboratory, Exposure Assessment Division, Las Vegas, Nevada. Prepared by Radian Corporation, June 19. (not cited in the SOP).

USEPA, 1997. Compendium of Methods for the Determination of Toxic Organic Compounds in Ambient Air, 2nd Ed. Compendium Method TO-15, Determination of Volatile Organic Compounds (VOCs) in Ambient Air Collected in Specially Prepared Canisters with Subsequent Analysis by Gas Chromoatography/Mass Spectrometry. Center for Environmental Research Information, Office of Research and Development, January.

USEPA, 1999. Compendium of Methods for the Determination of Toxic Organic Compounds in Ambient Air, 2nd Ed. Compendium Method TO-14A, Determination of Volatile Organic Compounds (VOCs) in Ambient Air Using Specially Prepared Canisters with Subsequent Analysis by Gas Chromatography. Center for Environmental Research Information, Office of Research and Development, January.

USEPA Office of Air and Radiation (6604J)guidance document titled "*Indoor Radon and Radon Decay Product Measurement Device Protocols'* dated August, EPA 402-R-92-004, July 1992 revised, (www.epa.gov/radon/pubs/devprot1.html).

USEPA. Office of Air Quality Planning and Standards, Air Superfund National Technical Guidance Study Series, Volume 2: Estimation of Baseline Air Emissions at Superfund Sites; Interim Final, EPA-450/1-89/002, 1989.

Response: *The full references are now in Section 16 in the SOP.*

Appendix A-5

Response to NDEP Comments on SOP-40 Data Review/Validation dated July 16, 2007

1. General comment regarding "Disclaimer", BRC states ""BRC CONTRACTORS RESERVE THE UNRESTRICTED RIGHT TO CHANGE, MODIFY OR NOT APPLY THESE GUIDELINES IN THEIR SOLE, COMPLETE, AND UNRESTRICTED DISCRETION TO MEET CERTAIN CIRCUMSTANCES, CONTRACTUAL REQUIREMENTS SITE CONDITIONS, OR JOB REQUIREMENTS." BRC should take note that the Guidance for Data Usability in Risk Assessment (EPA, 1992) states that "Knowledge that SOPs were developed and followed increases confidence that the quality of the data can be determined, and the level of certainty in risk assessment can be established." (Emphasis added) BRC is required to explain and document deviations from the SOPs.

Response: *The sentence, "ANY DEVIATIONS FROM THE STANDARD OPERATING PROCEDURES SHALL BE DOCUMENTED IN THE DATA VALIDATION REPORT IN THE APPROPRIATE QUALITY CONTROL SECTION" has been added to the disclaimer.*

2. Section 1.0, please explain if the radiochemistry data be validated using any guidance that can be cited in this section.

Response: *Radiochemical data will be validated using "Evaluation of Radiochemical Data Usability, U.S. Department of Energy, ES/ER/MS-5, April, 1995." This reference has been added to Section 1.0.*

3. Table 3, consider adding the "Z" qualifier that is discussed in 3.0, page 5, to this table.

Response: *The "Z" qualifier has been added to the project-specific validation qualifier section of the table in Section 3.*

4. Section 4.0, the NDEP has the following comments:
   a. This section should address broken Chain-of-Custody (COC) issues.

Response: *A discussion of chain of custody issues has been added to Section 4.*

   b. Holding times are not discussed in this section of the SOP but are included in Table 5. Consider adding some text in this section that discusses how holding times will be validated.

Response: *The Functional Guidelines are referenced in Section 4.2 for holding time exceedances. A discussion on the evaluation of holding times and the appropriate action for qualifying the samples based on holding time exceedances has been added to Section 4.2*

c. Section 4.1. The criterion for rejection volatiles that are ≥20 ºC is somewhat arbitrary. Professional judgment should be used. For example, if the samples were collected and shipped overnight, there should have been sufficient time to reach the 4±ºC criterion. Non-detect volatile results for samples found above approximately 10 ºC should be considered for rejection.

Response: *It should be noted that historical data validation summary reports that have been approved by NDEP have not rejected data that were at 13 ºC. Therefore, to maintain project consistency, BRC proposes that the criterion be adjusted to 15 ºC. This is also consistent with internal Laboratory Data Consultants (LDC) policy. In addition, text has also been added to Section 1.0 to note that data review/validation for the BMI Common Areas project will be directed by a qualified project chemist who will use professional judgment in all aspects of the data review/validation process.*

d. Section 4.2. This section (and Table 5) should also include the steps for validating and qualifying calibration data where a Relative Response Factor (RRF) and model linearity (e.g. calibration coefficient) are part of the calibration steps.

Response: *The Functional Guidelines are referenced in Section 4.2 for calibration exceedances. The Functional Guidelines include evaluation of relative response factors and action to take to qualify the data based on RRF exceedances. Since the Functional Guidelines will be followed for RRF qualification, RRF information was not added to the table. The sentence in the table, "Please see the appropriate National Functional Guidelines for individual criteria" has been revised to read, "Please see the appropriate National Functional Guidelines for individual criteria. The RRF and linearity criteria in the Functional Guidelines shall be followed."*

e. Section 4.3, Table 5, and Blanks in General. Validation and qualification of samples associated with blanks that contain contaminants should include professional judgment for both organic and inorganic analytes. The 5X or 10X rules should not be used blindly. Table 5 includes a number of cases where the samples will be censored (qualified with a "U") based on blank contamination. While this may be appropriate in the majority of cases, there are times where censoring data results in lost information that can be important in decision making. For example, in cases where the analyte raw concentration is greater than the raw blank concentration, but less than 5 or 10X, and the analyte is near or above an important action level (e.g. the USEPA Region IX PRG or the USEPA MCL), professional judgment should be used to determine the best qualifier. The use of professional judgment should be an option for all censoring cases included in Table 5.

Response: *BRC understands that the use of professional judgment applies to all parameters of evaluation included in the Functional Guidelines, including qualifying data based on blank contamination. As noted above, text has been added to Section 1.0 to note that data review/validation for the BMI Common Areas project will be directed by a qualified project chemist who will use professional judgment in all aspects of the data review/validation process.*

5. Sections 5.1 and 5.2, and Table 5. Sections 5.1 and 5.2 discuss the difference between Data Review and Data Validation; however the title to Table 5 is Data Review. This would imply these rules are only to be used with Data Review. Clarify the use of Data Review in Table 5 (including note 1). Are these to be applied to both Data Review and Data Validation activities?

Response: *Table 5 has been modified to make clear what parameters refer to data review and what parameters refer to data validation.*

6. Notes to Table 5. Considering adding an overall data-review/validation qualifier in cases where both a J+ and a J- are encountered for a data point.

Response: *BRC believes that the qualification of a sample indicating both a high bias and a low bias is not technically meaningful. QC results may indicate a high bias based on one QC outlier and a low bias or undetermined bias based on another QC outlier. The direction of the bias on the associated sample result cannot be determined. BRC suggests qualification in such sample results as a "J" without a bias indicator.*

7. Library. The SOP uses the term "Library", apparently in place of "Laboratory" throughout the document.

Response: *The document has been revised to remove the term "library" and to make each reference appropriately reflect the Functional Guidelines and the SOP.*

8. Table 5. The table should clarify that the J-TDS, J-CAB, and J-TDS & CAB qualifiers should be applied to all applicable ions and TDS (where appropriate).

Response: *The text in Section 5.1 has been revised to specify that these qualifiers will be applied to applicable ions and TDS where appropriate.*

Appendix A-6

Response to NDEP Comments on SOP-16 Flux Chamber Source Testing dated December 11, 2007

I. GENERAL COMMENTS

1. Please note that page numbers called out are based on the redline strikeout version.

Response: *Noted.*

2. Please confirm that the document date should be November 21, 2007 (cover page still shows the August 27, 2007 date) and that Dr. Schmidt authored this revision.

Response: *Yes, SOP-16 Revision 2 was prepared and submitted November 21, 2007. The latest revision of SOP-16, Revision 3, and these responses to comments, were prepared by Dr. Schmidt, and, dated and submitted January 4, 2008.*

3. The SOP does not appear to reflect flux chamber investigations other than the originally planned on-site investigation. Please update the SOP such that investigations other than the original on site investigation are adequately addressed. Please note that specific investigations do not need to be identified.

Response: *Agreed. The intent of SOP-16 was to create a technical guidance document that reflected the sample collection and analytical methodology that was to be used on all site work regardless of geography. SOP Revision 3 addresses this goal and the revisions should reflect this purpose. All of the geographic-specific information will be found in area-specific work plans or the Field Sampling Plans (FSPs).*

Please note that SOP documents and work plans are meant to be 'living documents', to be updated periodically. We have focused on the specific work plans and did not bring this version current to reflect changes in the program. In that spirit, there are potential changes currently in the making, which include the field research regarding assessing radon flux. SOP-16 Revision 3, for instance, still carries the 'static chamber' technology (AKA 5-gallon bucket) approach using activated charcoal sorbent canisters as an option to real-time radon monitoring in the dynamic flux chamber using the PTG-7RN radon detector. Currently, we need to carry both approaches until the tried and true but antiquated static chamber method can be replaced with the radon detector method, if proven. Likewise, the nomenclature and analytical menu currently in use as per the latest round of meeting and requested changes to the program have been incorporated (e.g., TO-14 nomenclature replaced by TO-15; TO-15 SIM short list at lowest RLs and TO-15 long list at the best possible RLs).

II. SPECIFIC COMMENTS

Section 1.0 Introduction

1. Page 1, third paragraph – This paragraph is very confusing, does not address investigations such as the current off-site investigation, and doesn't appear to add value to the SOP. The NDEP recommends deleting this paragraph. Please note that pre-remediation flux data can be used for purposes of post-remediation risk assessments if risks associated with the pre-remediation data are de minimis. If not, the contribution of pre-remediation flux risks to pre-remediation risk (i.e. cumulative risk) should be considered when establishing cumulative remediation goals.

Response: *Agreed. This paragraph has been removed from the document. BRC believes the reason this paragraph was added had to do with intended data use, which is often a topic included in APA work plans or SOP documents.*

Section 4.0 Quality Assurance Objectives

2. Page 8 (and other sections that discuss analytical methods), it is not clear why EPA Method TO-14 is still cited in the SOP. EPA Method TO-15 provides a more comprehensive list of VOCs and NDEP recently provided an evaluation of the laboratory's (EAS) reporting limits to BRC which supports the use of this method. Please provide rationale for including both methods in the SOP.

Response: *This is partly a 'carry-over' from historic application of the TO-14 versus TO-15 analytical methodology. Historically when cryo-trapping was used as the method for concentrating the air sample from the canister prior to injection into the GC, TO-14 was the method as opposed to TO-15 which allowed for sample concentration using a solid sorbent and thermal desorption. The cryo-trapping was better for attaining low, low level RLs and MDLs where the solid sorbent trapping and thermal desorption was better for a wide range of compounds including polar compounds that act like water. The revision herein reflects the current 'state of the art' for the method which is TO-15 SIM short list (lowest attainable RLs and MDLs for a short list of compounds) and TO-15 full scan analysis (best RLs and MDLs for a long list of compounds).*

3. Page 9, Table 1, please note that EAS currently lists 86 analytes for EPA Method TO-15 yet Table 1 indicates that 70 target compounds will be reported. Please identify the TO-15 analytes that will not be reported and provide rationale for excluding them from flux chamber investigations.

Response: *The target list of 86 compounds is EAS's full list available for analysis based on the number of standards that they have in house for compounds that respond as VOCs (vapor pressure) for analysis from a canister. Low detection limits, which are important, are achieved by limiting the number of compounds in the analysis. Seventy compounds have been selected and*

16 eliminated from the list. The modified list is an effort to focus on compounds that may be found as related to known compound use on the site and compounds found in groundwater, and eliminate compounds that are believed to be unrelated or ubiquitous in the urban environment. The full list doesn't really add any useful information and causes the analysis to be less sensitive. The main goal is to be able to identify the signature of any target plumes, provide data for exposure assessment, and insure that there are not unknown compounds that may be present.

4. Page 11, first paragraph after bullets, reference is made to "this" testing effort. Please revise this sentence to read "The data collection will include Level 3…". Also, please add a description of the most recently proposed radon data collection methodology in this and other sections that address radon data collection (e.g., Sections 2.2, 2.4, 5.1, 5.3, 9.4). Alternately, it could be noted that this SOP will be revised pending the validation of the new, proposed radon data collection method.

Response: *Agreed. The document has been revised to reflect this comment. Also, as noted above, potential changes currently in the making, which include the field research regarding assessing radon flux will be reflected in a future revision of this SOP.*

5. Page 13, Section 4.4, please delete references to "the post-remediation risk assessment". Please note that representativeness criteria are also dependent on source and exposure information as well as data distributions.

Response: *Reference to post-remediation risk assessment has been removed. References to data distribution as well as source and exposure information have been added.*

6. Page 30, Section 9.3.2 , Table 7, please provide rationale for the analytes listed for SIM analysis, as well as the need for the RLs listed.

Response: *The 22 compounds selected for SIM analysis are believed to be those most likely to be detected as compared to the full list, based on historical data collection efforts. Like the selection of the 70 from the maximum available full scan list of 86, lowest detection limits are achieved by limiting the compound list for the analysis. The combination of using a reasonably comprehensive full list and a project-specific short list for SIM offers the 'best of both worlds', meaning what SIM and full scan TO-15 can afford.*

Appendix A-7

Response to NDEP Comments on SOP-16 Flux Chamber Source Testing dated January 25, 2008

GENERAL COMMENTS

1. The NDEP understands and appreciates that BRC is in the process of obtaining and testing the PTG-7RN (real time) radon detector and associated interface methods with the surface flux chamber. As the current SOP-16 is written, there are a number of radon methods that may be used, including static versus dynamic charcoal-based methods and dynamic PTG-7RN methods (and combinations thereof), and it is difficult for the NDEP to separate out the methods in the various discussions, as written. We recommend that the charcoal and PTG-7RN methods be briefly described (citing the associated guidance) up front in the current SOP (e.g., p. 3), with a statement that the final method will be identified following field verification studies. We recommend that the more detailed discussions regarding radon flux methods (e.g., bottom of p. 5 to top of p. 6 and Sections 2.2, 2.4, 5.1, 5.3 [radon components], and 9.4) be deleted until the final method is identified. It is simply too confusing to follow the methods, and combinations of methods, that are being proposed as it is currently written.

Response: *The manufacturer of the PTG-7RN has indicated a delivery date of mid-February, at which time (as schedule allows), the analyzer will be evaluated and field tested against the activated charcoal (AC) canister technique for assessing exposure to radon. As background, there are two radon detection techniques (AC canister integrated sampler and PTG-7RN real time analyzer) and two flux chamber technologies (static chamber- AKA 5-gallon bucket and the USEPA dynamic flux chamber.). Both detection techniques can be used in both chamber technologies, and the SOP-16 document reflects that. However, it is BRC's hope that we will be able to dismiss the AC canister (integrated technique) and be able to obtain valid radon flux data from the USEPA flux chamber and real time analyzer (PTG-7RN) combination. So, after successful completion of the demonstration of the real time analyzer, we plan on revising the SOP-16 document to only include the USEPA dynamic flux chamber and real time analyzer for all on and off site applications. Therefore, it would make sense to hold off on the revision of the SOP-16 document until we have evaluated the real time analyzer, which greatly improves the APA and will allow for a streamlined SOP-16.*

BRC suggests a meeting or teleconference between Dr. Schmidt, BRC, NDEP, and NDEP's consultant to discuss the procedure to be used to verify that use of the PTG-7RN detector for radon flux will work for the project. A conceptual approach has been developed that collects side-by-side radon flux from two measurement approaches at the same three locations over a potential radon gas emitting source; dynamic flux with the radon monitor, and static flux with integrated, activated charcoal canister sampling. The test includes identifying three 'near-by' locations at one site, setting out the 5-gallon bucket static chamber equipped with two activated charcoal canisters each and securing the buckets for a 48 hour integration or exposure time-period. During this time period, the dynamic flux chamber will be used to measure the flux at each location three times per day over the two days. The average of the 'within one day' and

'day-to-day' real time flux will be compared to the average of the replicate charcoal canister flux at each location. This will determine the comparability of the measurement methods, which assumes that the close proximity of the test location by each method is not a factor in the analysis. The added benefit of this approach is that the variability of radon flux, both within day and day-to-day variability, can be examined by reviewing the real time flux data collected with the dynamic flux chamber and the radon monitor. It is proposed that the testing take place on the BRC Eastside property.

2. NDEP requests a discussion regarding the verification testing of the PTG-7RN real time methodology. This discussion should include, reviewing the scope of the work plan and a follow up to discuss the results of the verification testing.

Response: *A work plan for assessing efficacy of using the PTG-7RN radon detector (real time instrument), is attached. It describes the operation of the PTG-7RN and the scope of work intended for the demonstration of the efficacy of the measurement approach. Basically, the verification testing will challenge the analyzer against static chambers placed on a potential radon source onsite. The plan is to place three static chambers on a potential radon source for a 48-hour time period as per the operation of the AC canisters technique, and concurrently perform multiple dynamic flux chamber measurements adjacent to the static chambers at multiple times per day for the two day time period. An evaluation of the techniques will be made by comparing the results of the assessment with the static chamber and AC canisters to the radon count in the dynamic flux chamber averaged over the time interval.*

Note- the PTG-7RN is a simple ion chamber that works like a Geiger Counter. Energy particles emitted from the source are detected as radon gas over an integration period of no more than one-hour. The advantage of the real time instrument is that a sensitive assessment of radon gas can be made over a short time constant, which will allow field testing to occur without having to leave static or dynamic chambers on test locations over the 48-hour time period needed for the AC canisters. Give the sensitivity of the instrument, which counts single energy particles, it is possible that a shorter sampling interval can be used for the field assessment provided that a minimum ion count is achieved per test location.

SPECIFIC COMMENTS

1. Table of Contents, Section 9.3.2 – Please add the term "SIM" in the title of this section (please make the same edit for body of text section title). This is a global edit which needs to be carried through the document and will not be repeated for every instance.

Response: *Agreed. The TO-15 full scan and TO-15 SIM analysis will be properly identified throughout the SOP-16 document.*

2. Section 1.0 Introduction, page 1, second paragraph, 6th line, Please delete the words "static chamber", as this sentence refers to the flux chamber program in general.

Response: *Agreed. The words 'static chamber' have been deleted from this sentence.*

3. Section 2.0, page 3, second full paragraph, 4th line, Following the statement "…based on the soil matrix data", please add "and/or groundwater data".

Response: *Agreed. this text has been added to this sentence.*

4. Table 1, page 10, please note in the table that the "22 target compounds" method is TO-15 SIM.

Response: *Agreed. 'SIM' has been added to this section of the table.*

5. Section 9.3.1, USEPA Method TO-15, Canister Sampling Gas Chromatograph/Mass Spectroscopy (GC/MS) for VOCs, please provide a list of the 16 TO-15 analytes that will not be tested for, as well as rationale for their exclusion.

Response: *The 16 analytes not included have been listed, as well as the rationale for their exclusion. Basically all 16 analytes are not considered site-related chemicals (SRCs) for the project.*

6. Table 6, page 32, please provide rationale for the SIM compounds (e.g., the TO-15 reporting limits without SIM that exceed risk-based levels). Please identify why non-carcinogens such as TEX are included on the SIM list.

Response: *The TO-15 SIM compound list has been revised to include those chemicals which do not reach target reporting limits. See also response to specific comment 6 below.*

7. Section 16.0, References, Please delete the USEPA 1999 reference for TO-14.

Response: *Agreed. Reference to USEPA 1999 has been deleted.*

APPENDIX A-6, Response to NDEP Comments dated December 11, 2007:

Specific Comment 3 (Please identify the TO-15 analytes that will not be reported and provide rationale for excluding them from flux chamber investigations). This comment was not adequately addressed. Please create a table of the 16 TO-15 analytes and list, for each one, the rationale for excluding the analyte from the site testing program.

Response: *See response to specific comment #5 above.*

Specific Comment 6 (Please provide rationale for the analytes listed for SIM analysis, as well as the need for the RLs listed). This comment was not adequately addressed. Please create a table

of the 22 target SIM analytes listed in the current Table 6, and document that TO-15 (no SIM) RLs are inadequate for these analytes. The criterion for SIM analysis is that, without the SIM, RLs do not meet risk-based targets.

Response: *Attachment 4 has been added to the SOP to demonstrate which of the analytes need TO-15 SIM analysis in order to meet reporting limit requirements.*

Appendix A-8

Response to NDEP Comments on SOP-16 Flux Chamber Source Testing dated March 18, 2008

1. General comment, please note that the page numbers and line numbers referenced below are based on the "redlines accepted" printout of the document provided by BRC.

I. SOP-16, Flux Chamber Source Testing
Section 1.0 - Introduction
1. Page 1, first paragraph, 5th line, in order to provide a definition for "site" please insert the word "site" after "Common Areas". Please also insert "and off-site areas of interest" after the word "Nevada".

Response: *These changes have been made to the document on page 1.*

2. Page 1, third paragraph, 6th line, please replace "…conducted on site" with …"conducted related to the site".

Response: *This change has been made to the document on page 1.*

Section 4.0 – Quality Assurance Objectives

3. Page 7, Table 1, The table lists 22 target compounds for which SIM analysis will be run, however in Attachment A, only 20 compounds are identified for which risk-based reporting limits are not achieved. See also Comment below. Please note that this comment is only provided for clarity regarding documentation of the SIM analyte selection process and revision to the selected analytes is not necessary.

Response: *The list of target compounds for SIM analysis has been changed to the 20 compounds identified for which risk-based reporting limits are not achieved with the full scan mode. This number of target compounds has been changed to 20 on page 8, page 29, and Table 6.*

4. Page 10, first full paragraph, line 2, please insert "(if used") after "radon charcoal sample collection".

Response: *Because the static chamber technique and radon charcoal sample collection method has been re-inserted into the SOP, this text still pertains and has not been revised as suggested by this comment.*

Section 5.2 Sampling for VOCs/Radon in the Flux Chamber

5. Page 15, top of page (and top of page 16 under "Integrated Sampling"), based on the SAP submittal, some abbreviated method descriptions should be provided for both of the radon

methods, either here, in another section of the SOP, or in the SAP (Schmidt, February 2008). At a minimum, some description of the passive charcoal method should be provided, as the method is still considered to be a candidate method in the current SOP-16 and will be used in the proposed SAP.

Response: *Note that SOP-16 has been greatly revised to accommodate the testing that has taken place, and that is proposed to take place. This includes static flux chamber testing and AC canister sampling from the static chamber, and USEPA dynamic chamber testing and PTG-7Rn sampling from the chamber. These changes have been made throughout the SOP. See the included redline/strikeout version of the text for these changes.*

Section 9.3.1 USEPA Method TO-15 Full Scan Analysis, Canister Sampling Gas Chromatography/Mass Spectroscopy (GC/MS) for VOCs

6. Page 25, first full paragraph, it is requested that BRC include the SRC list for documentation or at a minimum provide a reference.

Response: *Reference to the BRC SRC list has been added to Section 9.3.1, page 27.*

7. Page 25, second paragraph, end of second sentence, please delete the second period.

Response: *This change has been made to the document on page 28.*

8. Page 25, third line from bottom of page, please provide the reference for "the USEPA draft scope of work for VOC compounds in ambient air".

Response: *Reference has been provided on page 28.*

Section 9.3.2 USEPA Method TO-15 SIM, Canister Sampling Gas Chromatography/Mass Spectroscopy (GC/MS) for VOCs

9. Page 26, bottom of page, please insert "conservative" before "risk-based target levels" (e.g., while some reporting limits may not meet the 1 x 10-6 risk target, most or all reporting limits meet the 1 x 10-5 risk target).

Response: *This change has been made to the document on page 29.*

10. Page 27, Table 6, two of the analytes listed in the SIM list (1,2-dichlorobenzene and 1,3-dichlorobenzene) are documented to have sufficient reporting limits in Attachment 4. Please clarify the SIM selection criteria.

Response: *See response to comment #3 above.*

Appendix A-7, Response to NDEP Comments Dated January 25, 2008

11. Response-to-Comment (RTC) for Comment #6, two compounds included on the SIM list (Table 6) appear to have adequate TO-15 Full Scan reporting limits. Please clarify.

Response: *See response to comment #3 above.*

Appendix A-9

Response to NDEP Comments on SOP-42 Subsurface Soil Sampling By Geoprobe™ Methods dated November 10, 2008

1. Table of Contents, the listing for "Attachment 1" is incorrect.

Response: *The listing for Attachment 1 has been corrected to read "Example Boring/Lithologic Log Form."*

2. Section 4.2, pg 8, while "thorough" decontamination may not be required, it is suggested that the equipment be steam cleaned between locations. If BRC disagrees, please provide additional specificity within this section regarding how the decision will be made regarding the need for decontamination.

Response: *The following has been added as the second to last sentence in Section 4.2 "However, equipment will be steam cleaned between sample locations."*

Appendix A-10

Response to NDEP Comments on SOP-16 Flux Chamber Source Testing dated November 3, 2008

I. COMMENTS TO PREVIOUS COMMENTS

Previous NDEP comment

10. Page 27, Table 6, two of the analytes listed in the SIM list (1,2-dichlorobenzene and 1,3-dichlorobenzene) are documented to have sufficient reporting limits in Attachment 4. Please clarify the SIM selection criteria.

Current Comment November 2008

Table 6 - Please delete the duplicate listing of 1,1,1,2-Tetrachloroethane (CAS Number 630-20-6) to maintain the correct count of 20 SIM analytes.

Response: *The duplicate listing of 1,1,1,2-tetrachloroethane has been deleted from Table 6.*

II. CURRENT COMMENTS

Section 5.2 Sampling for VOCs and Radon in the Dynamic Flux Chamber

It is the understanding of the NDEP that the PTG-7Rn instrument will not be used going forward. The SOP needs to be revised to reflect this.

Response: *Agreed. Reference to the PTG-7Rn instrument has been removed from the SOP. The SOP now only refers to the static flux chamber with activated carbon canisters method for radon.*

Section 5.3 Static Flux Chamber Sampling Using a 5-Gallon Bucket

Page 17 - Please use terminology for this method that is consistent with that used in the radon methodology verification report (i.e., replace "a 5 Gallon Bucket" with "Activated Charcoal Canisters").

Response: *The method uses a 5-gallon bucket as a static flux chamber, with activated charcoal canisters placed inside this chamber. Therefore, the correct terminology is 'static flux chamber with activated charcoal (AC) canisters.' This term is now used consistently in both the SOP and the verification study technical memorandum.*

Page18, short paragraph before equation – Please replace "24 hours" with "48 hours".

Response: *The wording has been changed in the revised SOP.*