SOIL BORING LOG KM-5655-B

KERR-McGEE CORPORATION Hydrology Dept. - S&EA Division	KM SUBSIDIARY KMCC	LOCATION Henderson	BORING NUMBER TR-1

DEPTH IN FEET	LITHOLOGIC DESCRIPTION	GRAPHIC LOG	UNIFIED SOIL FIELD CLASS.	BLOWS PER 6"	PID (ppm)	SOIL SAMPLE NO.	TYPE	DEPTH	REC.	REMARKS OR FIELD OBSERVATIONS
	0-37' GRAVELLY SAND, sdy GRAVEL and SAND, interbedded. mod. brown (5YR 4/4). Poorly sorted (well graded). Gravel up to 2" diam. Sand vc-vf... predom m-f, A-SR. Minor silt 10-20%, no clay mod $CaCO_3$ rinds on gravel grains		SW							
5			SP							
			GP							
10										
	8'-12' inc. gravel size									
15	16-20' m-vf sand w/ minor pea gravel		SW							
20			GP							
25	25'-29' m-vf sand w/ minor pea gravel little silt - 10-20%		SP							
30	31-33' Gravelly		GP							
35	35'-37' damp		SP							
37										QAL
	37'-104' sdy SILT (20-30%, vfg, A-SA grains),	4	ML							mc fg

EXPLANATION

- ▼ Water Table (24 Hour)
- ▽ Water Table (Time of Boring)
- PID Photoionization Detection (ppm)
- NO. Identifies Sample by Number
- TYPE Sample Collection Method

SPLIT-BARREL; AUGER; ROCK CORE; THIN-WALLED TUBE; CONTINUOUS SAMPLER; NO RECOVERY

- DEPTH Depth Top and Bottom of Sample
- REC. Actual Length of Recovered Sample in Feet

GRAPHIC LOG LEGEND

CLAY; SILT; SAND; GRAVEL; SILTY CLAY; CLAYEY SILT; DEBRIS FILL; HIGHLY ORGANIC (PEAT); SANDY CLAY; CLAYEY SAND

DATE DRILLED	9-1-99
PAGE	1 of 8
DRILLING METHOD	ARCH
DRILLED BY	Beylik
LOGGED BY	EJ KRISH
EXISTING GRADE ELEVATION (FT. AMSL)	
LOCATION OR GRID COORDINATES	

SOIL BORING LOG KM-5655-B

KERR-McGEE CORPORATION Hydrology Dept. - S&EA Division	KM SUBSIDIARY KMCC	LOCATION HENDERSON, NV	BORING NUMBER TR 1

DEPTH IN FEET	LITHOLOGIC DESCRIPTION	GRAPHIC LOG	UNIFIED SOIL FIELD CLASS.	BLOWS PER 6"	PID (ppm)	SOIL SAMPLE NO.	TYPE	DEPTH	REC.	REMARKS OR FIELD OBSERVATIONS
285 290 295	280-298' Gravelly Ss., mod brn (5YR 3/6). Com. calcareous cement. hard. vf-vc w/ com sm-granules to 1/8"-1/4" of qtz and volcanics (basalt, decite, andesite)		GW/ GP							HARD & fractured
298 305	298'-305 sl. silty Ss., mod brn (5YR 4/6). Var. calc. cement ... softer than above, 20-25% silt, vfg sd.		SM							
310 312	305-312' Gravelly Ss. mod brn (5YR 3/6 to 5YR 4/6) hard, calcareous cement vf-vc w/ com volc + qtz granules.		GW/ GP							hard & fractured WTR sampler @ 312'
	TD 312'									

EXPLANATION

- ▼ Water Table (24 Hour)
- ▽ Water Table (Time of Boring)
- PID Photoionization Detection (ppm)
- NO. Identifies Sample by Number
- TYPE Sample Collection Method

SPLIT-BARREL | AUGER | ROCK CORE | THIN-WALLED TUBE | CONTINUOUS SAMPLER | NO RECOVERY

- DEPTH Depth Top and Bottom of Sample
- REC. Actual Length of Recovered Sample in Feet

GRAPHIC LOG LEGEND

CLAY | DEBRIS FILL | SILT | HIGHLY ORGANIC (PEAT) | SAND | SANDY CLAY | GRAVEL | CLAYEY SAND | SILTY CLAY | CLAYEY SILT

DATE DRILLED	PAGE
9-2-99	8 of 8

DRILLING METHOD: ARCH

DRILLED BY: BEYLIK

LOGGED BY: E. KRISH

EXISTING GRADE ELEVATION (FT. AMSL):

LOCATION OR GRID COORDINATES:

KERR-McGEE CORPORATION
HYDROLOGY DEPARTMENT
MONITORING WELL INSTALLATION DIAGRAM

Protective Pipe
Yes ☑ No ☐
Steel ☑ PVC ☐
Surveying Pin ?
Yes ☐ No ☑

Casing Cap Vent ? Yes ☐ No ☐
Lock ? Yes ☐ No ☐
Weep Hole ? Yes ☐ No ☐

Concrete Pad _____ Ft. x _____ Ft. x _____ Inches

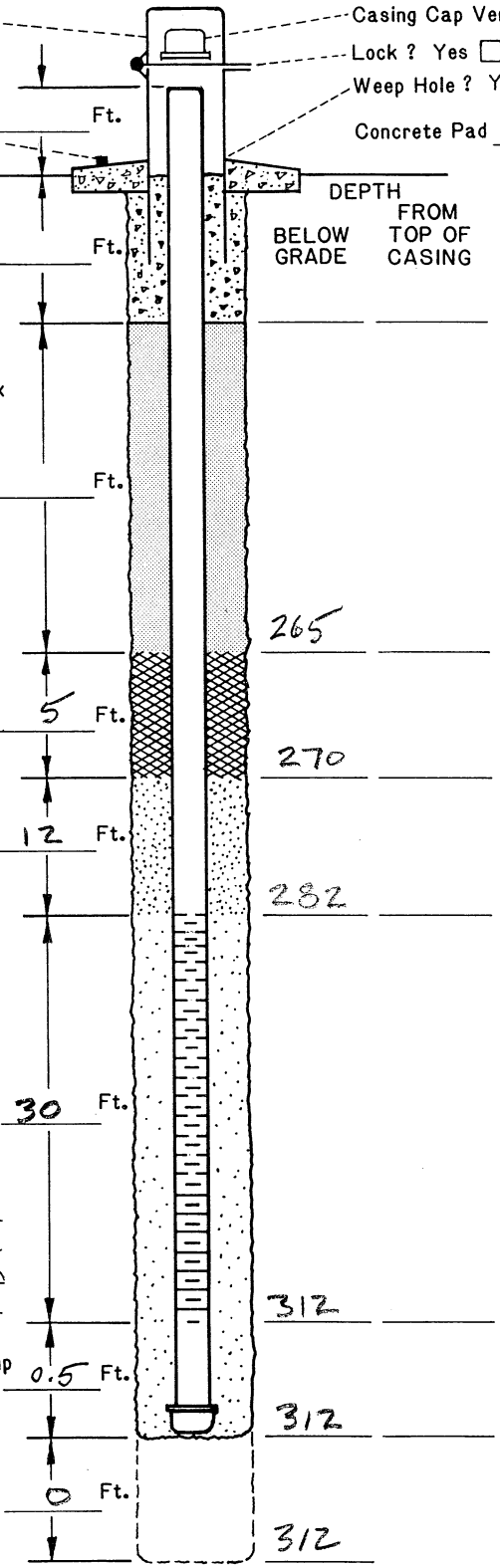

DRILLING INFORMATION:

1. Borehole Diameter= 9 5/8 Inches.
2. Were Drilling Additives Used ? Yes ☐ No ☒
   Revert ☐ Bentonite ☐ Water ☐
   Solid Auger ☐ Hollow Stem Auger ☐
3. Was Outer Steel Casing Used ? Yes ☐ No ☒
   Depth= _____ to _____ Feet.
4. Borehole Diameter for Outer Casing _____ Inches.

WELL CONSTRUCTION INFORMATION:

1. Type of Casing: PVC ☒ Galvanized ☐ Teflon ☐
   Stainless ☐ Other _____
2. Type of Casing Joints: Screw-Couple ☒ Glue-Couple ☐ Other _____
3. Type of Well Screen: PVC ☒ Galvanized ☐
   Stainless ☐ Teflon ☐ Other _____
4. Diameter of Casing and Well Screen:
   Casing 4" Inches, Screen 4" Inches.
5. Slot Size of Screen: .020
6. Type of Screen Perforation: Factory Slotted ☒
   Hacksaw ☐ Drilled ☐ Other _____
7. Installed Protector Pipe w/Lock: Yes ☒ No ☐

WELL DEVELOPMENT INFORMATION:

1. How was Well Developed ? Bailing ☐ Pumping ☒
   Air Surging (Air or Nitrogen) ☐ Other _____
2. Time Spent on Well Development ?
   60 / _____ Minutes/~~Hours~~
3. Approximate Water Volume Removed ? 90 Gallons
4. Water Clarity Before Development ? Clear ☒
   Turbid ☐ Opaque ☐
5. Water Clarity After Development ? Clear ☒
   Turbid ☐ Opaque ☐
6. Did Water have Odor ? Yes ☐ No ☒
   If Yes, Describe _____
7. Did Water have any Color ? Yes ☐ No ☒
   If Yes, Describe _____

WATER LEVEL INFORMATION:

Water Level Summary (From ~~Top of Casing~~) ng

During Drilling _____ Ft. Date _____
Before Development +4.2 Ft. Date 10-7-99
After Development +13.9 Ft. Date 1-13-00

Driller/Firm Beylik (Schoonmaker) Drill Rig Type Dresser TW70 Date Installed 9-3-99

Drill Crew EBERLY / PABILLA Well No. TR-1 Kerr-McGee Hydrologist E. KRISH

SOIL BORING LOG KM-5655-B

KERR-McGEE CORPORATION Hydrology Dept. - S&EA Division	KM SUBSIDIARY KMCLLC	LOCATION HENDERSON	BORING NUMBER TR-2

DEPTH IN FEET	LITHOLOGIC DESCRIPTION	GRAPHIC LOG	UNIFIED SOIL FIELD CLASS.	BLOWS PER 6"	PID (ppm)	SOIL SAMPLE NO.	TYPE	DEPTH	REC.	REMARKS OR FIELD OBSERVATIONS
	TOTAL DEPTH 180'									
	SEE LOG FROM WELL TR-1 (12' EAST OF TR-2) FOR LITHOLOGY									

EXPLANATION

- ▼ Water Table (24 Hour)
- ▽ Water Table (Time of Boring)
- PID Photoionization Detection (ppm)
- NO. Identifies Sample by Number
- TYPE Sample Collection Method

SPLIT-BARREL; AUGER; ROCK CORE; THIN-WALLED TUBE; CONTINUOUS SAMPLER; NO RECOVERY

DEPTH Depth Top and Bottom of Sample
REC. Actual Length of Recovered Sample in Feet

GRAPHIC LOG LEGEND

CLAY; SILT; SAND; GRAVEL; SILTY CLAY; CLAYEY SILT; DEBRIS FILL; HIGHLY ORGANIC (PEAT); SANDY CLAY; CLAYEY SAND; _____; _____

DATE DRILLED	PAGE
9/8/99	1 of 1

DRILLING METHOD: ARCH

DRILLED BY: BEYLIK

LOGGED BY: T. REED

EXISTING GRADE ELEVATION (FT AMSL):

LOCATION OR GRID COORDINATES:

KERR-McGEE CORPORATION
HYDROLOGY DEPARTMENT
MONITORING WELL INSTALLATION DIAGRAM

Protective Pipe
Yes ☑ No ☐
Steel ☑ PVC ☐
Surveying Pin ?
Yes ☐ No ☑

Casing Cap Vent ? Yes ☑ No ☐
Lock ? Yes ☐ No ☐
Weep Hole ? Yes ☐ No ☐
Concrete Pad _____ Ft. x _____ Ft. x _____ Inches

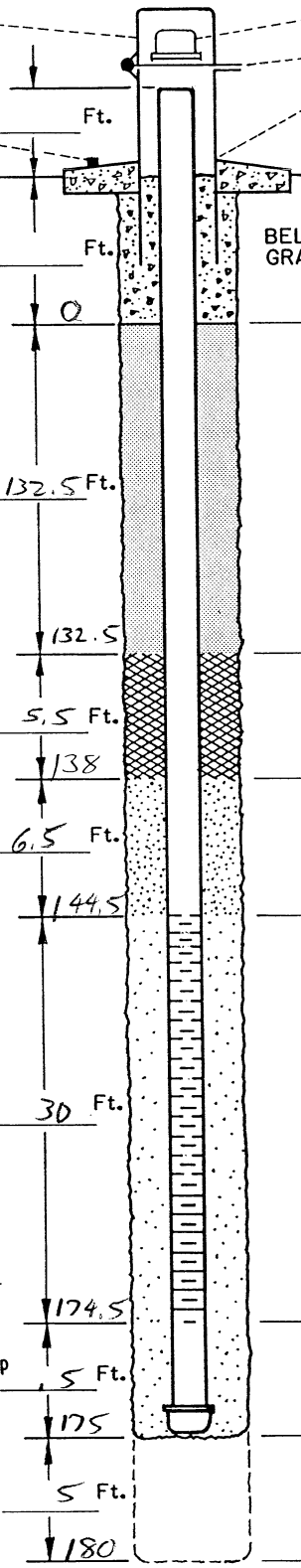

	Ft.	DEPTH BELOW GRADE	DEPTH FROM TOP OF CASING
Ft.			
Concrete	Ft.		
0			
Cement/Bentonite Grout Mix	132.5 Ft.		
132.5			
Bentonite Seal	5.5 Ft.		
138			
Filter Pack Above Screen	6.5 Ft.		
144.5			
FILTER PACK MATERIAL	30 Ft.		
174.5			
Dense Phase Sampling Cup	5 Ft.		
175			
Overdrilled Material Backfill	5 Ft.		
180			

Cement/Bentonite Grout Mix
Yes ☑ No ☐
5.5 Gallons Water to 94Lb. Bag Cement & 3-5 Lb. Bentonite Powder
Other: _____

Bentonite Seal
Pellets ☑ Slurry ☐

Filter Pack Above Screen

FILTER PACK MATERIAL
Silica Sand ☑
Washed Sand ☐
Pea Gravel ☐
Other: _____
Sand Size #3

Dense Phase Sampling Cup
Bottom Plug
Yes ☒ No ☐

Overdrilled Material Backfill
Grout ☐ Sand ☑
Caved Material ☐
Other: _____

DRILLING INFORMATION:

1. Borehole Diameter= 9 5/8 Inches.
2. Were Drilling Additives Used ? Yes ☐ No ☑
   Revert ☐ Bentonite ☐ Water ☐
   Solid Auger ☐ Hollow Stem Auger ☐
3. Was Outer Steel Casing Used ? Yes ☐ No ☑
   Depth= _____ to _____ Feet.
4. Borehole Diameter for Outer Casing _____ Inches.

WELL CONSTRUCTION INFORMATION:

1. Type of Casing: PVC ☑ Galvanized ☐ Teflon ☐
   Stainless ☐ Other _____
2. Type of Casing Joints: Screw-Couple ☑ Glue-Couple ☐ Other _____
3. Type of Well Screen: PVC ☑ Galvanized ☐
   Stainless ☐ Teflon ☐ Other _____
4. Diameter of Casing and Well Screen:
   Casing 4 Inches, Screen 4 Inches.
5. Slot Size of Screen: .020
6. Type of Screen Perforation: Factory Slotted ☑
   Hacksaw ☐ Drilled ☐ Other _____
7. Installed Protector Pipe w/Lock: Yes ☑ No ☐

WELL DEVELOPMENT INFORMATION:

1. How was Well Developed ? Bailing ☐ Pumping ☒
   Air Surging (Air or Nitrogen) ☐ Other _____
2. Time Spent on Well Development ?
   45 / _____ Minutes/~~Hours~~
3. Approximate Water Volume Removed ? 45 Gallons
4. Water Clarity Before Development ? Clear ☐
   Turbid ☒ Opaque ☐
5. Water Clarity After Development ? Clear ☒
   Turbid ☐ Opaque ☐
6. Did Water have Odor ? Yes ☐ No ☒
   If Yes, Describe _____
7. Did Water have any Color ? Yes ☐ No ☒
   If Yes , Describe _____

WATER LEVEL INFORMATION:

Water Level Summary (From ~~Top of Casing~~) ng

During Drilling _____ Ft. Date _____
Before Development -30.1 Ft. Date 10-7-99
After Development -29.9 Ft. Date 1-13-00

Driller/Firm A. SCHOONMAKER/BEYLICK Drill Rig Type DRESSER TW 70 Date Installed 9/9/99
Drill Crew J. EBERLEY/H. PADILLA Well No. TR-2 Kerr-McGee Hydrologist T. REED

SOIL BORING LOG KM-5655-B

KERR-McGEE CORPORATION Hydrology Dept. - S&EA Division	KM SUBSIDIARY KMCLLC	LOCATION HENDERSON	BORING NUMBER TR-3

DEPTH IN FEET	LITHOLOGIC DESCRIPTION	GRAPHIC LOG	UNIFIED SOIL FIELD CLASS.	BLOWS PER 6"	PID (ppm)	SOIL SAMPLE NO.	TYPE	DEPTH	REC.	REMARKS OR FIELD OBSERVATIONS
	FILL: SANDY GRAVEL,									
5	4-15 SAND w/ SILT AND GRAVEL; VF- COARSE- GRAINED; V. SLI. MOIST; MOD. YELLOWISH-BROWN 10YR 5/4		SW							
10										
15	15-27 GRAVEL w/ SAND & SILT; HARD DRILLING; LARGEST COBBLES @ 24-27'; V. SLI. MOIST; PALE YELLOWISH-BROWN 10YR 6/2		GW							
20										
25										
27										QAL
30	27-190' SILT, w/ SCATTERED sdy and/or clayey layers. Mod brn (5YR 4/4). Moist, calcareous. w/ scattered nodular caliche zones throughout		ML							MC fg
35	27'-32 sdy, f-mg (20-30% sd) 38-43, 1/16-1/2" nodules (caliche)									
40										

EXPLANATION

- ▼ Water Table (24 Hour)
- ▽ Water Table (Time of Boring)
- PID Photoionization Detection (ppm)
- NO. Identifies Sample by Number
- TYPE Sample Collection Method

SPLIT-BARREL; AUGER; ROCK CORE; THIN-WALLED TUBE; CONTINUOUS SAMPLER; NO RECOVERY

- DEPTH Depth Top and Bottom of Sample
- REC. Actual Length of Recovered Sample in Feet

GRAPHIC LOG LEGEND

CLAY; SILT; SAND; GRAVEL; SILTY CLAY; CLAYEY SILT; DEBRIS FILL; HIGHLY ORGANIC (PEAT); SANDY CLAY; CLAYEY SAND; CALICHE; _____

DATE DRILLED	PAGE
9/10-	1 of 7

DRILLING METHOD: ARCH / CORE

DRILLED BY: BEYLIK DRLG.

LOGGED BY: T. REED

EXISTING GRADE ELEVATION (FT AMSL):

LOCATION OR GRID COORDINATES:

SOIL BORING LOG KM-5655-B

KERR-McGEE CORPORATION Hydrology Dept. - S&EA Division	KM SUBSIDIARY KMC-LLC	LOCATION HENDERSON	BORING NUMBER TR-3

DEPTH IN FEET	LITHOLOGIC DESCRIPTION	GRAPHIC LOG	UNIFIED SOIL FIELD CLASS.	BLOWS PER 6"	PID (ppm)	SOIL SAMPLE NO.	TYPE	DEPTH	REC.	REMARKS OR FIELD OBSERVATIONS
40										
45	@ 45' wet, saturated to TD		ML							
50										WTR SMPL @ 50'
	51-52 hard cemented caliche layer									
	52-57 10-25% vfg sandy w/ 2" zone of pebbles (up to 2" diam) in silt matrix @ 54'									
55										
	57-65 calichified, nodular 1/16 - 1/2" yell gry (5Y 8/1)									Pesticide odor from 50' to 130'
60										
	62-64 10-20% vfg sd									
65										
70			ML							
	72-82 calichified silt, nodular 1/16 - 3/4"									
75										
80										

EXPLANATION

- ▼ Water Table (24 Hour)
- ▽ Water Table (Time of Boring)
- PID Photoionization Detection (ppm)
- NO. Identifies Sample by Number
- TYPE Sample Collection Method

SPLIT-BARREL | AUGER | ROCK CORE | THIN-WALLED TUBE | CONTINUOUS SAMPLER | NO RECOVERY

- DEPTH Depth Top and Bottom of Sample
- REC. Actual Length of Recovered Sample in Feet

GRAPHIC LOG LEGEND

CLAY | DEBRIS FILL | SILT | HIGHLY ORGANIC (PEAT) | SAND | SANDY CLAY | GRAVEL | CLAYEY SAND | SILTY CLAY | CALICHE | CLAYEY SILT | _____

DATE DRILLED	PAGE
9/10 - 9/12	2 of 7

DRILLING METHOD: ARCH - CORE

DRILLED BY: BEYLIK

LOGGED BY: T. REED

EXISTING GRADE ELEVATION (FT. AMSL):

LOCATION OR GRID COORDINATES:

SOIL BORING LOG KM-5655-B

KERR-McGEE CORPORATION Hydrology Dept. - S&EA Division	KM SUBSIDIARY KMC-LLC	LOCATION HENDERSON	BORING NUMBER TR-3

DEPTH IN FEET	LITHOLOGIC DESCRIPTION	GRAPHIC LOG	UNIFIED SOIL FIELD CLASS.	BLOWS PER 6"	PID (ppm)	SOIL SAMPLE NO.	TYPE	DEPTH	REC.	REMARKS OR FIELD OBSERVATIONS
	@ 82' mod brn 5YR4/4									
	82'-93' sdy, 20-30% vf-fg									
85										
			ML							
90										
95										
	97-100' calichified zone yell gry(5Y8/1) nodular to 3/4"									
100										
	100-110 sdy (vf-fg), 25%, w/ minor vc - 1/4" A-SA vlc grains 105'-110'									
105										
			ML							
110	110-115 calichified zone, nodular to 1/2" yell gry									
115										
120										

EXPLANATION

- ▼ Water Table (24 Hour)
- ▽ Water Table (Time of Boring)
- PID Photoionization Detection (ppm)
- NO. Identifies Sample by Number
- TYPE Sample Collection Method

SPLIT-BARREL; AUGER; ROCK CORE; THIN-WALLED TUBE; CONTINUOUS SAMPLER; NO RECOVERY

- DEPTH Depth Top and Bottom of Sample
- REC. Actual Length of Recovered Sample in Feet

GRAPHIC LOG LEGEND

CLAY; DEBRIS FILL; SILT; HIGHLY ORGANIC (PEAT); SAND; SANDY CLAY; GRAVEL; CLAYEY SAND; SILTY CLAY; CALICHE; CLAYEY SILT; _____

DATE DRILLED	PAGE
9/10 - 9/12	3 of 7

DRILLING METHOD: ARCH

DRILLED BY: BETZIK

LOGGED BY: T. REED

EXISTING GRADE ELEVATION (FT. AMSL):

LOCATION OR GRID COORDINATES:

SOIL BORING LOG KM-5655-B

KERR-McGEE CORPORATION Hydrology Dept. - S&EA Division	KM SUBSIDIARY KMC-LLC	LOCATION HENDERSON	BORING NUMBER TR-3

DEPTH IN FEET	LITHOLOGIC DESCRIPTION	GRAPHIC LOG	UNIFIED SOIL FIELD CLASS.	BLOWS PER 6"	PID (ppm)	SOIL SAMPLE NO.	TYPE	DEPTH	REC.	REMARKS OR FIELD OBSERVATIONS
	SILT, as above, mod brn (5YR 4/4)									pesticide odor ends @ 130'
125										
			ML							
130										
135	135-141' calichified, nodular, zone 1/16"-1/2" nodules									
140										
145	140-150 sdy, vf-fg, 30%		ML							
150										
155										
160										

EXPLANATION

- ▼ Water Table (24 Hour)
- ▽ Water Table (Time of Boring)
- PID Photoionization Detection (ppm)
- NO. Identifies Sample by Number
- TYPE Sample Collection Method

SPLIT-BARREL · AUGER · ROCK CORE · THIN-WALLED TUBE · CONTINUOUS SAMPLER · NO RECOVERY

DEPTH Depth Top and Bottom of Sample
REC. Actual Length of Recovered Sample in Feet

GRAPHIC LOG LEGEND

CLAY · SILT · SAND · GRAVEL · SILTY CLAY · CLAYEY SILT · DEBRIS FILL · HIGHLY ORGANIC (PEAT) · SANDY CLAY · CLAYEY SAND · CALICHE · _____

DATE DRILLED	PAGE
9/10-9/12/99	4 of 7

DRILLING METHOD: ARCH

DRILLED BY: BETLIK

LOGGED BY: T. REED

EXISTING GRADE ELEVATION (FT. AMSL):

LOCATION OR GRID COORDINATES:

SOIL BORING LOG KM-5655-B

KERR-McGEE CORPORATION Hydrology Dept. - S&EA Division	KM SUBSIDIARY KMC-LLC	LOCATION HENDERSON	BORING NUMBER TR-3

DEPTH IN FEET	LITHOLOGIC DESCRIPTION	GRAPHIC LOG	UNIFIED SOIL FIELD CLASS.	BLOWS PER 6"	PID (ppm)	SOIL SAMPLE NO.	TYPE	DEPTH	REC.	REMARKS OR FIELD OBSERVATIONS
160	160'-168' calichified nodular (1/16-1/4" diam), yell gry, sdy (vf-fg)									
165			ML							
170										
175			ML							
180	180'-195' calichified, nodular, zone									
185										
190										MC fg
	190'-200' SAND, vf-fg, mod brn, com calc. cement,									MC cg hard drilling
	192'-196' SAND, pebbly. Mod brn matrix & "salt & pepper" volc ash pebbles. vfg sd, A-SA, 1/16"-1/2" pebbles		SW							
200										

EXPLANATION

- ▼ Water Table (24 Hour)
- ▽ Water Table (Time of Boring)
- PID Photoionization Detection (ppm)
- NO. Identifies Sample by Number
- TYPE Sample Collection Method

SPLIT-BARREL; AUGER; ROCK CORE; THIN-WALLED TUBE; CONTINUOUS SAMPLER; NO RECOVERY

- DEPTH Depth Top and Bottom of Sample
- REC. Actual Length of Recovered Sample in Feet

GRAPHIC LOG LEGEND

CLAY; DEBRIS FILL; SILT; HIGHLY ORGANIC (PEAT); SAND; SANDY CLAY; GRAVEL; CLAYEY SAND; SILTY CLAY; CALICHE; CLAYEY SILT; _____

DATE DRILLED	PAGE
9/10-12/99	5 of 7

DRILLING METHOD: ARCH

DRILLED BY: BEYUK

LOGGED BY: T. REED

EXISTING GRADE ELEVATION (FT. AMSL):

LOCATION OR GRID COORDINATES:

SOIL BORING LOG KM-5655-B

KERR-McGEE CORPORATION Hydrology Dept. - S&EA Division	KM SUBSIDIARY KMCLLC	LOCATION HENDERSON	BORING NUMBER TR-3

DEPTH IN FEET	LITHOLOGIC DESCRIPTION	GRAPHIC LOG	UNIFIED SOIL FIELD CLASS.	BLOWS PER 6"	PID (ppm)	SOIL SAMPLE NO.	TYPE	DEPTH	REC.	REMARKS OR FIELD OBSERVATIONS
	200'-230' SILT, sdy med brn, vf-fg w/ 30-40% sd in matrix. calcareous w/ minor 1/16" caliche nodules									
205										
210										
	212-230 calichified nodular zone (1/16"-1/2")		ML							
215										
220										
225										
230	230-251.5 SAND, vf-f w/m grains, A-SA, sp. calc cement gry oran (10YR 7/4)		SW							
235										
240										

EXPLANATION

- ▼ Water Table (24 Hour)
- ▽ Water Table (Time of Boring)
- PID Photoionization Detection (ppm)
- NO. Identifies Sample by Number
- TYPE Sample Collection Method

SPLIT-BARREL · AUGER · ROCK CORE · THIN-WALLED TUBE · CONTINUOUS SAMPLER · NO RECOVERY

- DEPTH Depth Top and Bottom of Sample
- REC. Actual Length of Recovered Sample in Feet

GRAPHIC LOG LEGEND

CLAY · SILT · SAND · GRAVEL · SILTY CLAY · CLAYEY SILT · DEBRIS FILL · HIGHLY ORGANIC (PEAT) · SANDY CLAY · CLAYEY SAND · CALICHE

DATE DRILLED	PAGE
9/10-12/99	6 of 7

DRILLING METHOD: ARCH

DRILLED BY: BEYLIK

LOGGED BY: T. REED

EXISTING GRADE ELEVATION (FT. AMSL)

LOCATION OR GRID COORDINATES

SOIL BORING LOG KM-5655-B

KERR-McGEE CORPORATION Hydrology Dept. - S&EA Division	KM SUBSIDIARY KMCLLC	LOCATION HENDERSON	BORING NUMBER TR-3

DEPTH IN FEET	LITHOLOGIC DESCRIPTION	GRAPHIC LOG	UNIFIED SOIL FIELD CLASS.	BLOWS PER 6"	PID (ppm)	SOIL SAMPLE NO.	TYPE	DEPTH	REC.	REMARKS OR FIELD OBSERVATIONS
	SAND, as above									
245			SW							
250										
	TD 251.5'									

EXPLANATION

- ▼ Water Table (24 Hour)
- ▽ Water Table (Time of Boring)
- PID Photoionization Detection (ppm)
- NO. Identifies Sample by Number
- TYPE Sample Collection Method

SPLIT-BARREL · AUGER · ROCK CORE · THIN-WALLED TUBE · CONTINUOUS SAMPLER · NO RECOVERY

- DEPTH Depth Top and Bottom of Sample
- REC. Actual Length of Recovered Sample in Feet

GRAPHIC LOG LEGEND

CLAY · DEBRIS FILL · SILT · HIGHLY ORGANIC (PEAT) · SAND · SANDY CLAY · GRAVEL · CLAYEY SAND · SILTY CLAY · CLAYEY SILT

DATE DRILLED	PAGE
9/10-12/99	7 of 7

DRILLING METHOD: ARCH

DRILLED BY: BEYLIK

LOGGED BY: T. REED

EXISTING GRADE ELEVATION (FT AMSL)

LOCATION OR GRID COORDINATES

KERR-McGEE CORPORATION
HYDROLOGY DEPARTMENT
MONITORING WELL INSTALLATION DIAGRAM

Protective Pipe
Yes ☑ No ☐
Steel ☑ PVC ☐
Surveying Pin ?
Yes ☐ No ☑

Casing Cap Vent ? Yes ☐ No ☐
Lock ? Yes ☐ No ☐
Weep Hole ? Yes ☐ No ☐
Concrete Pad _____ Ft. x _____ Ft. x _____ Inches

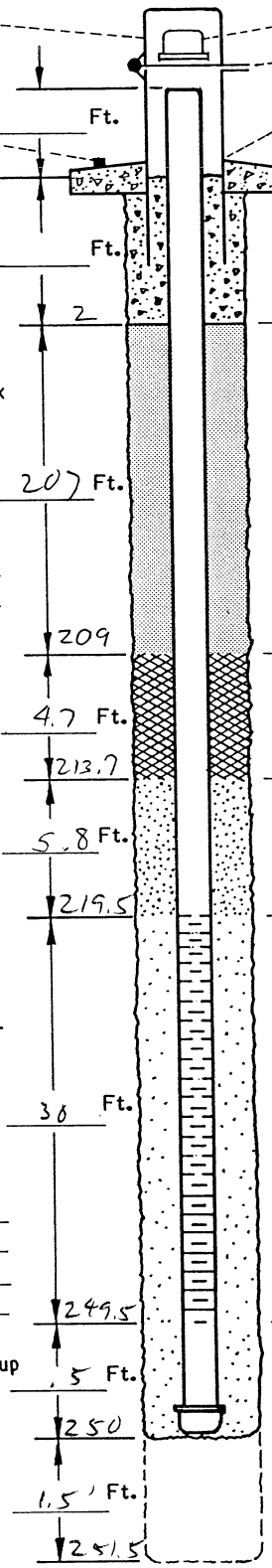

DEPTH FROM TOP OF CASING | DEPTH BELOW GRADE

Cement/Bentonite Grout Mix
Yes ☑ No ☐
5.5 Gallons Water to 94Lb. Bag Cement & 3-5 Lb. Bentonite Powder
Other: _____

Bentonite Seal
Pellets ☑ Slurry ☐

Filter Pack Above Screen

FILTER PACK MATERIAL
Silica Sand ☑
Washed Sand ☐
Pea Gravel ☐
Other: _____
Sand Size #3

Dense Phase Sampling Cup
Bottom Plug
Yes ☐ No ☑

Overdrilled Material Backfill
Grout ☐ Sand ☑
Caved Material ☐
Other: _____

DRILLING INFORMATION:

1. Borehole Diameter= 9 5/8 Inches.
2. Were Drilling Additives Used ? Yes ☐ No ☑
   Revert ☐ Bentonite ☐ Water ☐
   Solid Auger ☐ Hollow Stem Auger ☐
3. Was Outer Steel Casing Used ? Yes ☐ No ☑
   Depth= _____ to _____ Feet.
4. Borehole Diameter for Outer Casing _____ Inches.

WELL CONSTRUCTION INFORMATION:

1. Type of Casing: PVC ☑ Galvanized ☐ Teflon ☐
   Stainless ☐ Other _____
2. Type of Casing Joints: Screw-Couple ☑ Glue-Couple ☐ Other _____
3. Type of Well Screen: PVC ☑ Galvanized ☐
   Stainless ☐ Teflon ☐ Other _____
4. Diameter of Casing and Well Screen:
   Casing 4 Inches, Screen 4 Inches.
5. Slot Size of Screen: 0.020
6. Type of Screen Perforation: Factory Slotted ☑
   Hacksaw ☐ Drilled ☐ Other _____
7. Installed Protector Pipe w/Lock: Yes ☑ No ☐

WELL DEVELOPMENT INFORMATION:

1. How was Well Developed ? Bailing ☐ Pumping ☒
   Air Surging (Air or Nitrogen) ☐ Other _____
2. Time Spent on Well Development ?
   45 / _____ Minutes/~~Hours~~
3. Approximate Water Volume Removed ? 450 Gallons
4. Water Clarity Before Development ? Clear ☒
   Turbid ☐ Opaque ☐
5. Water Clarity After Development ? Clear ☒
   Turbid ☐ Opaque ☐
6. Did Water have Odor ? Yes ☐ No ☑
   If Yes, Describe _____
7. Did Water have any Color ? Yes ☐ No ☒
   If Yes, Describe _____

WATER LEVEL INFORMATION:

Water Level Summary (From ~~Top of Casing~~) ng

During Drilling _____ Ft. Date _____
Before Development -8.0 Ft. Date 10-7-99
After Development -3.6 Ft. Date 1-13-00

Driller/Firm A. SCHOONMAKER / BEYLIK Drill Rig Type DRESSER TW 70 Date Installed 9/12-13/99
Drill Crew J. EBERLY / S. PADILLA Well No. TR-3 Kerr-McGee Hydrologist T. REED

SOIL BORING LOG KM-5655-B

KERR-McGEE CORPORATION Hydrology Dept. - S&EA Division	KM SUBSIDIARY KMCLLC	LOCATION HENDERSON	BORING NUMBER TR-4

DEPTH IN FEET	LITHOLOGIC DESCRIPTION	GRAPHIC LOG	UNIFIED SOIL FIELD CLASS.	BLOWS PER 6"	PID (ppm)	SOIL SAMPLE NO.	TYPE	DEPTH	REC.	REMARKS OR FIELD OBSERVATIONS
	TOTAL DEPTH 147' SEE LOG FROM WELL TR-3 (~10' SOUTH OF TR-4) FOR LITHOLOGY									

EXPLANATION

- ▼ Water Table (24 Hour)
- ▽ Water Table (Time of Boring)
- PID Photoionization Detection (ppm)
- NO. Identifies Sample by Number
- TYPE Sample Collection Method

SPLIT-BARREL · AUGER · ROCK CORE · THIN-WALLED TUBE · CONTINUOUS SAMPLER · NO RECOVERY

- DEPTH Depth Top and Bottom of Sample
- REC. Actual Length of Recovered Sample in Feet

GRAPHIC LOG LEGEND

CLAY · DEBRIS FILL · SILT · HIGHLY ORGANIC (PEAT) · SAND · SANDY CLAY · GRAVEL · CLAYEY SAND · SILTY CLAY · CLAYEY SILT

DATE DRILLED	PAGE
9/14/99	1 of 1

DRILLING METHOD: ARCH

DRILLED BY: SEYLIK

LOGGED BY: T. REED

EXISTING GRADE ELEVATION (FT AMSL)

LOCATION OR GRID COORDINATES

KERR-McGEE CORPORATION
HYDROLOGY DEPARTMENT
MONITORING WELL INSTALLATION DIAGRAM

Protective Pipe
Yes ☑ No ☐
Steel ☑ PVC ☐
Surveying Pin ?
Yes ☐ No ☑

Casing Cap Vent ? Yes ☐ No ☐
Lock ? Yes ☐ No ☐
Weep Hole ? Yes ☐ No ☐
Concrete Pad _____ Ft. x _____ Ft. x _____ Inches

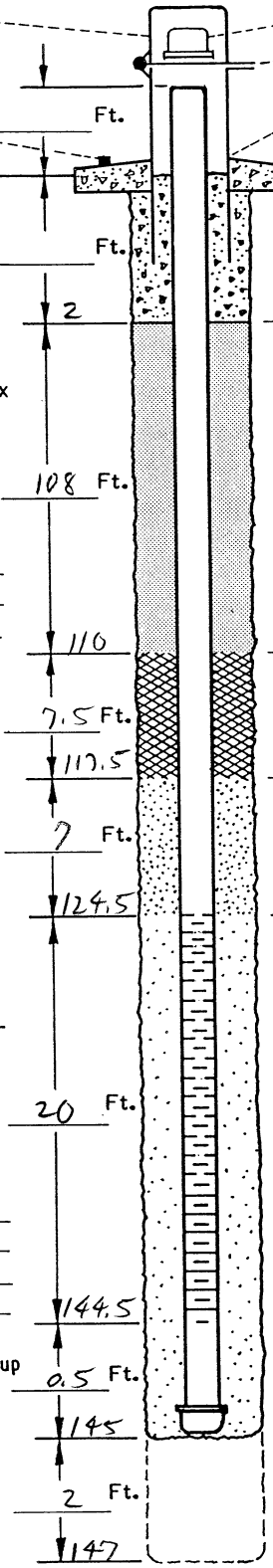

	Ft.	DEPTH BELOW GRADE	DEPTH FROM TOP OF CASING
Concrete			
	2		
Cement/Bentonite Grout Mix	108		
	110		
Bentonite Seal	7.5		
	117.5		
Filter Pack Above Screen	7		
	124.5		
FILTER PACK MATERIAL	20		
	144.5		
Dense Phase Sampling Cup	0.5		
	145		
Overdrilled Material Backfill	2		
	147		

Cement/Bentonite Grout Mix
Yes ☑ No ☐
5.5 Gallons Water to 94Lb. Bag Cement & 3-5 Lb. Bentonite Powder
Other: _____

Bentonite Seal
Pellets ☑ Slurry ☐

Filter Pack Above Screen

FILTER PACK MATERIAL
Silica Sand ☑
Washed Sand ☐
Pea Gravel ☐
Other: _____
Sand Size #3

Dense Phase Sampling Cup
Bottom Plug
Yes ☐ No ☐

Overdrilled Material Backfill
Grout ☐ Sand ☑
Caved Material ☐
Other: _____

DRILLING INFORMATION:

1. Borehole Diameter= 9 5/8 Inches.
2. Were Drilling Additives Used ? Yes ☐ No ☑
   Revert ☐ Bentonite ☐ Water ☐
   Solid Auger ☐ Hollow Stem Auger ☐
3. Was Outer Steel Casing Used ? Yes ☐ No ☑
   Depth= _____ to _____ Feet.
4. Borehole Diameter for Outer Casing _____ Inches.

WELL CONSTRUCTION INFORMATION:

1. Type of Casing: PVC ☑ Galvanized ☐ Teflon ☐
   Stainless ☐ Other _____
2. Type of Casing Joints: Screw-Couple ☑ Glue-Couple ☐ Other _____
3. Type of Well Screen: PVC ☑ Galvanized ☐
   Stainless ☐ Teflon ☐ Other _____
4. Diameter of Casing and Well Screen:
   Casing 4 Inches, Screen 4 Inches.
5. Slot Size of Screen: 0.020
6. Type of Screen Perforation: Factory Slotted ☑
   Hacksaw ☐ Drilled ☐ Other _____
7. Installed Protector Pipe w/Lock: Yes ☑ No ☐

WELL DEVELOPMENT INFORMATION:

1. How was Well Developed ? Bailing ☐ Pumping ☒
   Air Surging (Air or Nitrogen) ☐ Other _____
2. Time Spent on Well Development ?
   45 / _____ Minutes/~~Hours~~
3. Approximate Water Volume Removed ? 225 Gallons
4. Water Clarity Before Development ? Clear ☐
   Turbid ☒ Opaque ☐
5. Water Clarity After Development ? Clear ☒
   Turbid ☐ Opaque ☐
6. Did Water have Odor ? Yes ☐ No ☒
   If Yes, Describe _____
7. Did Water have any Color ? Yes ☐ No ☒
   If Yes, Describe _____

WATER LEVEL INFORMATION:

Water Level Summary (From ~~Top of Casing~~) ng

During Drilling _____ Ft. Date _____
Before Development -36.4 Ft. Date 10-7-99
After Development -36.35 Ft. Date 1-13-00

Driller/Firm A. SCHOONMAKER / BEYUK
Drill Rig Type DRESSER TW 70
Date Installed 9/15/99
Drill Crew J. EBERLEY / S. PADILLA
Well No. TR-4
Kerr-McGee Hydrologist T. REED

SOIL BORING LOG KM-5655-B

KERR-McGEE CORPORATION Hydrology Dept. - S&EA Division	KM SUBSIDIARY KMCLLC	LOCATION HENDERSON	BORING NUMBER TR-5

DEPTH IN FEET	LITHOLOGIC DESCRIPTION	GRAPHIC LOG	UNIFIED SOIL FIELD CLASS.	BLOWS PER 6"	PID (ppm)	SOIL SAMPLE NO.	TYPE	DEPTH	REC.	REMARKS OR FIELD OBSERVATIONS
	SANDY GRAVEL w/ SILT; SLI. MOIST; GRAYISH-ORANGE PINK 5YR 7/2		GW							
5	SAND (VF-MED.) WITH SILT AND GRAVEL; SLI. MOIST; 5YR 7/2		SW							
10	SANDY GRAVEL, SLI. MOIST; SOME SILT; GRAYISH-ORANGE PINK 5YR 7/2		GW							
15										
20	SAND; VF-F GRAINED; MED-COARSE SAND OCC. TO COMMON; SLI.-MOD. MOIST; LT. BROWN 5YR 6/4		SW							
25	GRAVELLY SAND; VF-COARSE; MOD. MOIST; LT. BROWN; 5YR 6/4		SW							
30										
35										Qal
37	37-62 SILT w/thin sdy zones, mod yell brn (10YR5/4) calcareous		ML							MC fg
40										

EXPLANATION

- ▼ Water Table (24 Hour)
- ▽ Water Table (Time of Boring)
- PID Photoionization Detection (ppm)
- NO. Identifies Sample by Number
- TYPE Sample Collection Method

SPLIT-BARREL; AUGER; ROCK CORE; THIN-WALLED TUBE; CONTINUOUS SAMPLER; NO RECOVERY

- DEPTH Depth Top and Bottom of Sample
- REC. Actual Length of Recovered Sample in Feet

GRAPHIC LOG LEGEND

CLAY; SILT; SAND; GRAVEL; SILTY CLAY; CLAYEY SILT; DEBRIS FILL; HIGHLY ORGANIC (PEAT); SANDY CLAY; CLAYEY SAND; _____; _____

DATE DRILLED	PAGE
9/16-9/22/99	1 of 7

DRILLING METHOD: ARCH

DRILLED BY: BEYLIK

LOGGED BY: T. REED

EXISTING GRADE ELEVATION (FT. AMSL):

LOCATION OR GRID COORDINATES:

SOIL BORING LOG KM-5655-B

KERR-McGEE CORPORATION Hydrology Dept. - S&EA Division	KM SUBSIDIARY KM LLC	LOCATION Henderson	BORING NUMBER TB-5

DEPTH IN FEET	LITHOLOGIC DESCRIPTION	GRAPHIC LOG	UNIFIED SOIL FIELD CLASS.	BLOWS PER 6"	PID (ppm)	SOIL SAMPLE NO.	TYPE	DEPTH	REC.	REMARKS OR FIELD OBSERVATIONS
	37-50 sdy, 20% vf-fg									
45			ML							
50	50-57 nodular to semi-massive caliche									
55										
60										
62	62-72 SAND, silty w/ minor vc volc grains. Mod brn. A-SA, fg w/ vf and minor vc. Calcareous		SM							
65										
70										
72	72-78 Gravel, sdy, granule size (1/16"-1/4") volcanic grams w/ vf-fg matrix. calcareous.		SW							
75										
78	78-130 SILT, w/minor interbedded cly silt and		ML							
80										

EXPLANATION

- ▼ Water Table (24 Hour)
- ▽ Water Table (Time of Boring)
- PID Photoionization Detection (ppm)
- NO. Identifies Sample by Number
- TYPE Sample Collection Method

SPLIT-BARREL | AUGER | ROCK CORE | THIN-WALLED TUBE | CONTINUOUS SAMPLER | NO RECOVERY

- DEPTH Depth Top and Bottom of Sample
- REC. Actual Length of Recovered Sample in Feet

GRAPHIC LOG LEGEND

CLAY | DEBRIS FILL | SILT | HIGHLY ORGANIC (PEAT) | SAND | SANDY CLAY | GRAVEL | CLAYEY SAND | SILTY CLAY | CALICHE | CLAYEY SILT | _____

DATE DRILLED	PAGE
9/16-9/22/99	2 of 7

DRILLING METHOD: ARCH

DRILLED BY: BEACK

LOGGED BY: T. REED

EXISTING GRADE ELEVATION (FT AMSL):

LOCATION OR GRID COORDINATES:

SOIL BORING LOG KM-5655-B

KERR-McGEE CORPORATION Hydrology Dept. - S&EA Division	KM SUBSIDIARY KMCLLC	LOCATION HENDERSON	BORING NUMBER TR-5

DEPTH IN FEET	LITHOLOGIC DESCRIPTION	GRAPHIC LOG	UNIFIED SOIL FIELD CLASS.	BLOWS PER 6"	PID (ppm)	SOIL SAMPLE NO.	TYPE	DEPTH	REC.	REMARKS OR FIELD OBSERVATIONS
	vfg sdy silt, mod brn, soft w/ minor calcareous cement throughout.									
85	Scattered nodular caliche zones throughout									
90			ML							
95										
100										
105										
110	112-115		ML							
	CALICHE-CEMENTED ZONE, nodular									
115										
120										

EXPLANATION

- ▼ Water Table (24 Hour)
- ▽ Water Table (Time of Boring)
- PID Photoionization Detection (ppm)
- NO. Identifies Sample by Number
- TYPE Sample Collection Method

SPLIT-BARREL · AUGER · ROCK CORE · THIN-WALLED TUBE · CONTINUOUS SAMPLER · NO RECOVERY

- DEPTH Depth Top and Bottom of Sample
- REC. Actual Length of Recovered Sample in Feet

GRAPHIC LOG LEGEND

CLAY · DEBRIS FILL · SILT · HIGHLY ORGANIC (PEAT) · SAND · SANDY CLAY · GRAVEL · CLAYEY SAND · SILTY CLAY · CLAYEY SILT

DATE DRILLED	PAGE
9/16-9/22/99	3 of 7

DRILLING METHOD: ARCH

DRILLED BY: BEYLIK

LOGGED BY: T. REED

EXISTING GRADE ELEVATION (FT. AMSL)

LOCATION OR GRID COORDINATES

SOIL BORING LOG KM-5655-B

KERR-McGEE CORPORATION Hydrology Dept. - S&EA Division	KM SUBSIDIARY KMCLLC	LOCATION HENDERSON	BORING NUMBER TR-5

DEPTH IN FEET	LITHOLOGIC DESCRIPTION	GRAPHIC LOG	UNIFIED SOIL FIELD CLASS.	BLOWS PER 6"	PID (ppm)	SOIL SAMPLE NO.	TYPE	DEPTH	REC.	REMARKS OR FIELD OBSERVATIONS
	SILT AS ABOVE; CALICHE-CEMENTED ZONES @ 122-125' nodular caliche									
125										
130			ML							
	132'-147' calcified silt, com sd to pebble sized caliche A-SA, caliche nodules									
135										
140										
145										
	147-150' silt as above, calcareous									
150	150-158 nodular caliche zone									
155			ML							
	158-180 silt as above calcareous									
160										

EXPLANATION

- ▼ Water Table (24 Hour)
- ▽ Water Table (Time of Boring)
- PID Photoionization Detection (ppm)
- NO. Identifies Sample by Number
- TYPE Sample Collection Method

SPLIT-BARREL; AUGER; ROCK CORE; THIN-WALLED TUBE; CONTINUOUS SAMPLER; NO RECOVERY

- DEPTH Depth Top and Bottom of Sample
- REC. Actual Length of Recovered Sample in Feet

GRAPHIC LOG LEGEND

CLAY; SILT; SAND; GRAVEL; SILTY CLAY; CLAYEY SILT; DEBRIS FILL; HIGHLY ORGANIC (PEAT); SANDY CLAY; CLAYEY SAND; _____; _____

DATE DRILLED	PAGE
9/16-9/22/99	4 of 7

DRILLING METHOD: ARCH

DRILLED BY: BETLIK

LOGGED BY: T. REED

EXISTING GRADE ELEVATION (FT. AMSL)

LOCATION OR GRID COORDINATES

SOIL BORING LOG KM-5655-B

KERR-McGEE CORPORATION Hydrology Dept. - S&EA Division	KM SUBSIDIARY KMCLLC	LOCATION HENDERSON	BORING NUMBER TR-5

DEPTH IN FEET	LITHOLOGIC DESCRIPTION	GRAPHIC LOG	UNIFIED SOIL FIELD CLASS.	BLOWS PER 6"	PID (ppm)	SOIL SAMPLE NO.	TYPE	DEPTH	REC.	REMARKS OR FIELD OBSERVATIONS
160										
165										
170			ML							
175										
	177-180 nodular caliche									MC fg
180	180-200 SAND, silty, mod brn, soft, vfw/fg, A-SA, w/ 20-30% silt calcareous, w/ scattered minor amts of sd/granule size caliche nodules.									MC cg
185										
			SM							
190	187-195 common calichification									
195										

EXPLANATION

- ▼ Water Table (24 Hour)
- ▽ Water Table (Time of Boring)
- PID Photoionization Detection (ppm)
- NO. Identifies Sample by Number
- TYPE Sample Collection Method

SPLIT-BARREL | AUGER | ROCK CORE | THIN-WALLED TUBE | CONTINUOUS SAMPLER | NO RECOVERY

- DEPTH Depth Top and Bottom of Sample
- REC. Actual Length of Recovered Sample in Feet

GRAPHIC LOG LEGEND

CLAY | DEBRIS FILL | SILT | HIGHLY ORGANIC (PEAT) | SAND | SANDY CLAY | GRAVEL | CLAYEY SAND | SILTY CLAY | CLAYEY SILT

DATE DRILLED	PAGE
9/16-9/22/99	5 of 7

DRILLING METHOD: ARCH

DRILLED BY: BEYLIK

LOGGED BY: T. REED

EXISTING GRADE ELEVATION (FT. AMSL)

LOCATION OR GRID COORDINATES

SOIL BORING LOG KM-5655-B

KERR-McGEE CORPORATION Hydrology Dept. - S&EA Division	KM SUBSIDIARY KMCC	LOCATION HENDERSON	BORING NUMBER TR-5

DEPTH IN FEET	LITHOLOGIC DESCRIPTION	GRAPHIC LOG	UNIFIED SOIL FIELD CLASS.	BLOWS PER 6"	PID (ppm)	SOIL SAMPLE NO.	TYPE	DEPTH	REC.	REMARKS OR FIELD OBSERVATIONS
200	200 - 216 SAND, mod brn (5YR 5/4), vf-fg w/ v. minor mg, A-SA, w/10-20% silt. Mod. calc. cement. w/scattered minor caliche nodules (fg - pea grav size)		SW							
205										
210										
215										
	216-219 SILT, sdy, soft, (20-30% vfg), mod brn,		ML							
220	219 - 233 SAND, (as above), vf-fg, mod brn, A-SA, with interbeds (thin) containing VC-1/8" vole grains. Calcareous cement. Fractured w/ calcite on frac. surfaces		SW							
225										
230										
235	233 - 252.5 SAND, gravelly, mod brn, vf-f w/ VC-1/4", A-SA, granules of basalt, andesite, dacite		SW							

EXPLANATION

- ▼ Water Table (24 Hour)
- ▽ Water Table (Time of Boring)
- PID Photoionization Detection (ppm)
- NO. Identifies Sample by Number
- TYPE Sample Collection Method

SPLIT-BARREL; AUGER; ROCK CORE; THIN-WALLED TUBE; CONTINUOUS SAMPLER; NO RECOVERY

- DEPTH Depth Top and Bottom of Sample
- REC. Actual Length of Recovered Sample in Feet

GRAPHIC LOG LEGEND

CLAY; DEBRIS FILL; SILT; HIGHLY ORGANIC (PEAT); SAND; SANDY CLAY; GRAVEL; CLAYEY SAND; SILTY CLAY; CLAYEY SILT

DATE DRILLED	9/16/99 - 9/22/99
PAGE	6 of 7
DRILLING METHOD	ARCH
DRILLED BY	BEYLIK
LOGGED BY	E. KRISH
EXISTING GRADE ELEVATION (FT. AMSL)	
LOCATION OR GRID COORDINATES	

SOIL BORING LOG KM-5655-B

KERR-McGEE CORPORATION Hydrology Dept. - S&EA Division	KM SUBSIDIARY KMCC	LOCATION HENDERSON	BORING NUMBER TR-5

DEPTH IN FEET	LITHOLOGIC DESCRIPTION	GRAPHIC LOG	UNIFIED SOIL FIELD CLASS.	BLOWS PER 6"	PID (ppm)	SOIL SAMPLE NO.	TYPE	DEPTH	REC.	REMARKS OR FIELD OBSERVATIONS
	Calcareous cement common.									
245			SW							
250										
	TD 252.5									

EXPLANATION

- ▼ Water Table (24 Hour)
- ▽ Water Table (Time of Boring)
- PID Photoionization Detection (ppm)
- NO. Identifies Sample by Number
- TYPE Sample Collection Method

SPLIT-BARREL · AUGER · ROCK CORE · THIN-WALLED TUBE · CONTINUOUS SAMPLER · NO RECOVERY

- DEPTH Depth Top and Bottom of Sample
- REC. Actual Length of Recovered Sample in Feet

GRAPHIC LOG LEGEND

CLAY · DEBRIS FILL · SILT · HIGHLY ORGANIC (PEAT) · SAND · SANDY CLAY · GRAVEL · CLAYEY SAND · SILTY CLAY · CLAYEY SILT

DATE DRILLED	PAGE
9/16-9/22/99	7 of 7
DRILLING METHOD: ARCH	
DRILLED BY: BEYLIK	
LOGGED BY: E. KRISH	
EXISTING GRADE ELEVATION (FT. AMSL)	
LOCATION OR GRID COORDINATES	

KERR-McGEE CORPORATION
HYDROLOGY DEPARTMENT
MONITORING WELL INSTALLATION DIAGRAM

Protective Pipe
Yes ☑ No ☐
Steel ☑ PVC ☐
Surveying Pin ? Yes ☐ No ☑

Casing Cap Vent ? Yes ☐ No ☐
Lock ? Yes ☐ No ☐
Weep Hole ? Yes ☐ No ☐
Concrete Pad _____ Ft. x _____ Ft. x _____ Inches

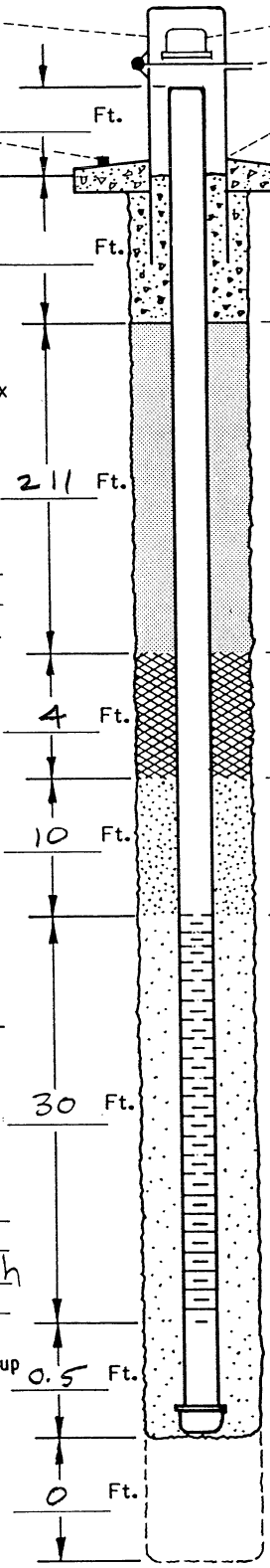

	Ft.	DEPTH FROM TOP OF CASING BELOW GRADE
		0
Concrete	Ft.	
Cement/Bentonite Grout Mix: Yes ☒ No ☐; 5.5 Gallons Water to 94Lb. Bag Cement & 3-5 Lb. Bentonite Powder	211 Ft.	
Other:		
Bentonite Seal: Pellets ☒ Slurry ☐	4 Ft.	211
Filter Pack Above Screen	10 Ft.	221
FILTER PACK MATERIAL: Silica Sand ☒; Washed Sand ☐; Pea Gravel ☐; Other: ; Sand Size #3 mesh	30 Ft.	251
Dense Phase Sampling Cup; Bottom Plug: Yes ☒ No ☐	0.5 Ft.	251.5
Overdrilled Material Backfill: Grout ☐ Sand ☐; Caved Material ☐; Other:	0 Ft.	

DRILLING INFORMATION:

1. Borehole Diameter= 9 5/8 Inches.
2. Were Drilling Additives Used ? Yes ☐ No ☒
   Revert ☐ Bentonite ☐ Water ☐
   Solid Auger ☐ Hollow Stem Auger ☐
3. Was Outer Steel Casing Used ? Yes ☐ No ☒
   Depth= _____ to _____ Feet.
4. Borehole Diameter for Outer Casing 4 Inches.

WELL CONSTRUCTION INFORMATION:

1. Type of Casing: PVC ☒ Galvanized ☐ Teflon ☐
   Stainless ☐ Other _____
2. Type of Casing Joints: Screw-Couple ☒ Glue-Couple ☐ Other _____
3. Type of Well Screen: PVC ☒ Galvanized ☐
   Stainless ☐ Teflon ☐ Other _____
4. Diameter of Casing and Well Screen:
   Casing 4 Inches, Screen 4 Inches.
5. Slot Size of Screen: .020
6. Type of Screen Perforation: Factory Slotted ☒
   Hacksaw ☐ Drilled ☐ Other _____
7. Installed Protector Pipe w/Lock: Yes ☐ No ☐

WELL DEVELOPMENT INFORMATION:

1. How was Well Developed ? Bailing ☐ Pumping ☒
   Air Surging (Air or Nitrogen) ☐ Other _____
2. Time Spent on Well Development ?
   45 / _____ Minutes ~~/Hours~~
3. Approximate Water Volume Removed ? 175 Gallons
4. Water Clarity Before Development ? Clear ☐
   Turbid ☒ Opaque ☐
5. Water Clarity After Development ? Clear ☒
   Turbid ☐ Opaque ☐
6. Did Water have Odor ? Yes ☐ No ☒
   If Yes, Describe _____
7. Did Water have any Color ? Yes ☐ No ☒
   If Yes, Describe _____

WATER LEVEL INFORMATION:

Water Level Summary (From ~~Top of Casing~~) ng

During Drilling _____ Ft. Date _____
Before Development -14.6 Ft. Date 10-7-99
After Development -13.9 Ft. Date 1-13-00

Driller/Firm Schoonmaker/BEYLIK Drill Rig Type DTW70 Date Installed 9-22-99
Drill Crew EBERLY, PADILLA Well No. TR-5 Kerr-McGee Hydrologist E. KRISH

SOIL BORING LOG KM-5655-B

KERR-McGEE CORPORATION Hydrology Dept. - S&EA Division	KM SUBSIDIARY KMCC	LOCATION HENDERSON	BORING NUMBER TR 6

DEPTH IN FEET	LITHOLOGIC DESCRIPTION	GRAPHIC LOG	UNIFIED SOIL FIELD CLASS.	BLOWS PER 6"	PID (ppm)	SOIL SAMPLE NO.	TYPE	DEPTH	REC.	REMARKS OR FIELD OBSERVATIONS
	TD 80' 15' North of TR 5 see TR 5 lith log for lithology									

EXPLANATION

- ▼ Water Table (24 Hour)
- ▽ Water Table (Time of Boring)
- PID Photoionization Detection (ppm)
- NO. Identifies Sample by Number
- TYPE Sample Collection Method

SPLIT-BARREL · AUGER · ROCK CORE · THIN-WALLED TUBE · CONTINUOUS SAMPLER · NO RECOVERY

DEPTH Depth Top and Bottom of Sample
REC. Actual Length of Recovered Sample in Feet

GRAPHIC LOG LEGEND

CLAY · DEBRIS FILL · SILT · HIGHLY ORGANIC (PEAT) · SAND · SANDY CLAY · GRAVEL · CLAYEY SAND · SILTY CLAY · CLAYEY SILT

DATE DRILLED	PAGE
9-24-99	1 of 1

DRILLING METHOD: ARCH

DRILLED BY: BEYLIK

LOGGED BY: E. KRISH

EXISTING GRADE ELEVATION (FT. AMSL)

LOCATION OR GRID COORDINATES

KERR-McGEE CORPORATION
HYDROLOGY DEPARTMENT
MONITORING WELL INSTALLATION DIAGRAM

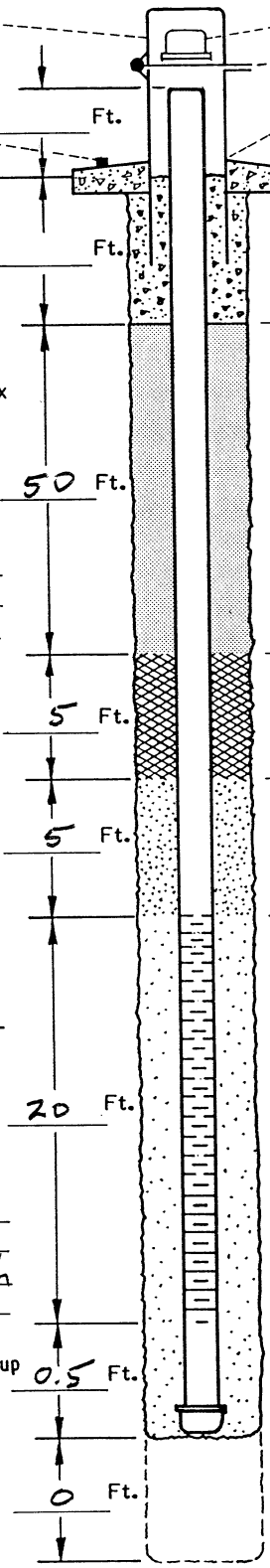

Protective Pipe
Yes ☑ No ☐
Steel ☑ PVC ☐
Surveying Pin ?
Yes ☐ No ☑

Ft.

Concrete Ft.

Cement/Bentonite Grout Mix
Yes ☒ No ☐
5.5 Gallons Water to 94Lb. Bag Cement & 3-5 Lb. Bentonite Powder
Other: _____

50 Ft.

Bentonite Seal
Pellets ☐ Slurry ☐

5 Ft.

Filter Pack Above Screen

5 Ft.

FILTER PACK MATERIAL
Silica Sand ☒
Washed Sand ☐
Pea Gravel ☐
Other: _____
Sand Size #3 mesh

20 Ft.

Dense Phase Sampling Cup
Bottom Plug
Yes ☒ No ☐

0.5 Ft.

Overdrilled Material Backfill
Grout ☐ Sand ☐
Caved Material ☐

0 Ft.

Other: _____

Casing Cap Vent ? Yes ☐ No ☐
Lock ? Yes ☐ No ☐
Weep Hole ? Yes ☐ No ☐
Concrete Pad _____ Ft. x _____ Ft. x _____ Inches

DEPTH BELOW GRADE	DEPTH FROM TOP OF CASING
0	
50	
55	
60	
80	
80.5	

DRILLING INFORMATION:

1. Borehole Diameter= 9 5/8 Inches.
2. Were Drilling Additives Used ? Yes ☐ No ☒
   Revert ☐ Bentonite ☐ Water ☐
   Solid Auger ☐ Hollow Stem Auger ☐
3. Was Outer Steel Casing Used ? Yes ☐ No ☒
   Depth= _____ to _____ Feet.
4. Borehole Diameter for Outer Casing _____ Inches.

WELL CONSTRUCTION INFORMATION:

1. Type of Casing: PVC ☒ Galvanized ☐ Teflon ☐
   Stainless ☐ Other _____
2. Type of Casing Joints: Screw-Couple ☒ Glue-Couple ☐ Other _____
3. Type of Well Screen: PVC ☒ Galvanized ☐
   Stainless ☐ Teflon ☐ Other _____
4. Diameter of Casing and Well Screen:
   Casing 4 Inches, Screen 4 Inches.
5. Slot Size of Screen: .020
6. Type of Screen Perforation: Factory Slotted ☐
   Hacksaw ☐ Drilled ☐ Other _____
7. Installed Protector Pipe w/Lock: Yes ☐ No ☐

WELL DEVELOPMENT INFORMATION:

1. How was Well Developed ? Bailing ☐ Pumping ☒
   Air Surging (Air or Nitrogen) ☐ Other _____
2. Time Spent on Well Development ?
   60 / _____ Minutes/~~Hours~~
3. Approximate Water Volume Removed ? 600 Gallons
4. Water Clarity Before Development ? Clear ☒
   Turbid ☐ Opaque ☐
5. Water Clarity After Development ? Clear ☒
   Turbid ☐ Opaque ☐
6. Did Water have Odor ? Yes ☒ No ☐
   If Yes, Describe Pesticide
7. Did Water have any Color ? Yes ☐ No ☒
   If Yes , Describe _____

WATER LEVEL INFORMATION:

Water Level Summary (From ~~Top of Casing~~) ng

During Drilling _____ Ft. Date _____
Before Development -37.6' Ft. Date 10-7-99
After Development -36.9 Ft. Date 1-13-00

Driller/Firm Schoonmaker / BEYLIK
Drill Rig Type DTW 70
Date Installed 9-24-99
Drill Crew EBERLY / PADILLA
Well No. TR6
Kerr-McGee Hydrologist E KRISH

SOIL BORING LOG KM-5655-B

KERR-McGEE CORPORATION Hydrology Dept. - S&EA Division	KM SUBSIDIARY KMCC	LOCATION HENDERSON	BORING NUMBER TR7

DEPTH IN FEET	LITHOLOGIC DESCRIPTION	GRAPHIC LOG	UNIFIED SOIL FIELD CLASS.	BLOWS PER 6"	PID (ppm)	SOIL SAMPLE NO.	TYPE	DEPTH	REC.	REMARKS OR FIELD OBSERVATIONS
5, 10	0-12 GRAVEL, sdy, gry oran (10YR 7/4) and mod yell brn (10YR 5/4). 60-70% gravel up to 1" diam in sd (f-vc) matrix. Mod. calcite cement. Mod calichification		GW							
12, 15, 20	12-20 SAND, gravelly, as above w/ 30-40% 1" diam volc gravel		SW							
26	20-26 SAND, silty gry oran (10YR 7/4) vf-vc w/ 20% silt in matrix		SM							
30, 35	26-43 SAND, gry orange (10YR 7/4) vf-m w/ minor vc, A-SA, calcareous w/ sp-sd-size caliche nodules		SW							damp @ 28'

EXPLANATION

- Water Table (24 Hour)
- Water Table (Time of Boring)
- PID Photoionization Detection (ppm)
- NO. Identifies Sample by Number
- TYPE Sample Collection Method

SPLIT-BARREL, AUGER, ROCK CORE, THIN-WALLED TUBE, CONTINUOUS SAMPLER, NO RECOVERY

- DEPTH Depth Top and Bottom of Sample
- REC. Actual Length of Recovered Sample in Feet

GRAPHIC LOG LEGEND

CLAY, SILT, SAND, GRAVEL, SILTY CLAY, CLAYEY SILT, DEBRIS FILL, HIGHLY ORGANIC (PEAT), SANDY CLAY, CLAYEY SAND

DATE DRILLED	PAGE
9/25-9/26/99	1 of 8

DRILLING METHOD: ARCH

DRILLED BY: BEYLIK

LOGGED BY: E KRISH

EXISTING GRADE ELEVATION (FT. AMSL)

LOCATION OR GRID COORDINATES

SOIL BORING LOG KM-5655-B

KERR-McGEE CORPORATION Hydrology Dept. - S&EA Division	KM SUBSIDIARY KMCC	LOCATION HENDERSON	BORING NUMBER TR7

DEPTH IN FEET	LITHOLOGIC DESCRIPTION	GRAPHIC LOG	UNIFIED SOIL FIELD CLASS.	BLOWS PER 6"	PID (ppm)	SOIL SAMPLE NO.	TYPE	DEPTH	REC.	REMARKS OR FIELD OBSERVATIONS
			SW							Qal
43	43'-49' SILT, with thin interbeds of sdy(vfg) SILT and clayey SILT. Gry oran (10YR7/4)		ML							MC fg MC fg
50 55	49'-63' SAND, vf-mg, A-SA, com. caliche cement. gry oran (10YR 7/4) Fractured		SW							MC cg
60										WATER @ 63'
65	63'-70' Gravel, sdy, gry orange and dk yell brn (10YR 4/2). Pea gravel size volc grains		GW							
70										
75	70'-82' SAND, gry orange, vf-m w/ tr vc. Com caliche cement. Fractured		SW							

EXPLANATION

- ▼ Water Table (24 Hour)
- ▽ Water Table (Time of Boring)
- PID Photoionization Detection (ppm)
- NO. Identifies Sample by Number
- TYPE Sample Collection Method

SPLIT-BARREL · AUGER · ROCK CORE · THIN-WALLED TUBE · CONTINUOUS SAMPLER · NO RECOVERY

DEPTH Depth Top and Bottom of Sample
REC. Actual Length of Recovered Sample in Feet

GRAPHIC LOG LEGEND

CLAY · SILT · SAND · GRAVEL · SILTY CLAY · CLAYEY SILT · DEBRIS FILL · HIGHLY ORGANIC (PEAT) · SANDY CLAY · CLAYEY SAND

DATE DRILLED	PAGE
9/25-9/26/99	2 of 8

DRILLING METHOD: ARCH

DRILLED BY: BEYLIK

LOGGED BY: KRISH

EXISTING GRADE ELEVATION (FT. AMSL)

LOCATION OR GRID COORDINATES

SOIL BORING LOG KM-5655-B

KERR-McGEE CORPORATION Hydrology Dept. - S&EA Division	KM SUBSIDIARY KMCC	LOCATION HENDERSON	BORING NUMBER TR7

DEPTH IN FEET	LITHOLOGIC DESCRIPTION	GRAPHIC LOG	UNIFIED SOIL FIELD CLASS.	BLOWS PER 6"	PID (ppm)	SOIL SAMPLE NO.	TYPE	DEPTH	REC.	REMARKS OR FIELD OBSERVATIONS
			SW							
82	82'-85' SILT, sdy, gry oran, sp. caliche frags.		ML							
85	85'-90' GRAVEL, sdy, gryoran + dk yell brn, vf-mg, A-SA w/sp. vc. Volc gravel to 1" diam.		GW							WTR-bearing MC cg
90	90'-186' SILT and sdy (vfg) SILT. Gry orange (10YR 7/4) and mod yell brn (10YR 5/4) scattered calichified zones throughout		ML							MC fg
95	90'-106' sdy silt, vf-fg, 20-25% sd									
100	106-110' inc. in clay in matrix, 10-20%									
105										
110	110'-114' com caliche nodules									
115	114'-125' 20-25% clay in matrix, w/ 10-15% vf-fg sd									

EXPLANATION

- ▼ Water Table (24 Hour)
- ▽ Water Table (Time of Boring)
- PID Photoionization Detection (ppm)
- NO. Identifies Sample by Number
- TYPE Sample Collection Method

SPLIT-BARREL; AUGER; ROCK CORE; THIN-WALLED TUBE; CONTINUOUS SAMPLER; NO RECOVERY

- DEPTH Depth Top and Bottom of Sample
- REC. Actual Length of Recovered Sample in Feet

GRAPHIC LOG LEGEND

CLAY; DEBRIS FILL; SILT; HIGHLY ORGANIC (PEAT); SAND; SANDY CLAY; GRAVEL; CLAYEY SAND; SILTY CLAY; CLAYEY SILT

DATE DRILLED	PAGE
9/25-9/26/99	3 of 8

DRILLING METHOD: ARCH

DRILLED BY: BEYLIK

LOGGED BY: E. KRISH

EXISTING GRADE ELEVATION (FT. AMSL)

LOCATION OR GRID COORDINATES

SOIL BORING LOG KM-5655-B

KERR-McGEE CORPORATION Hydrology Dept. - S&EA Division	KM SUBSIDIARY KMCC	LOCATION HENDERSON	BORING NUMBER TR7

DEPTH IN FEET	LITHOLOGIC DESCRIPTION	GRAPHIC LOG	UNIFIED SOIL FIELD CLASS.	BLOWS PER 6"	PID (ppm)	SOIL SAMPLE NO.	TYPE	DEPTH	REC.	REMARKS OR FIELD OBSERVATIONS
125										
130	128'-134' nodular caliche zone in sdy SILT		ML							
135	134-156' sdy SILT, com caliche nodules, w/ 20-30% vf-fg sd A-SR									
140										
145										
150	147-156' semi-massive caliche zone w/ tr. vc sd to sm. granules (volc). Cemented zone is sdy		ML							
155	156'-160' mod caliche still sdy, 15-25%									

EXPLANATION

- ▼ Water Table (24 Hour)
- ▽ Water Table (Time of Boring)
- PID Photoionization Detection (ppm)
- NO. Identifies Sample by Number
- TYPE Sample Collection Method

SPLIT-BARREL; AUGER; ROCK CORE; THIN-WALLED TUBE; CONTINUOUS SAMPLER; NO RECOVERY

- DEPTH Depth Top and Bottom of Sample
- REC. Actual Length of Recovered Sample in Feet

GRAPHIC LOG LEGEND

CLAY; SILT; SAND; GRAVEL; SILTY CLAY; CLAYEY SILT; DEBRIS FILL; HIGHLY ORGANIC (PEAT); SANDY CLAY; CLAYEY SAND; _____; _____

DATE DRILLED	9/25-9/26/99
PAGE	4 of 8
DRILLING METHOD	ARCH
DRILLED BY	BEYLIK
LOGGED BY	E. KRISH
EXISTING GRADE ELEVATION (FT. AMSL)	
LOCATION OR GRID COORDINATES	

SOIL BORING LOG KM-5655-B

KERR-McGEE CORPORATION Hydrology Dept. - S&EA Division	KM SUBSIDIARY KMCC	LOCATION HENDERSON	BORING NUMBER TR-7

DEPTH IN FEET	LITHOLOGIC DESCRIPTION	GRAPHIC LOG	UNIFIED SOIL FIELD CLASS.	BLOWS PER 6"	PID (ppm)	SOIL SAMPLE NO.	TYPE	DEPTH	REC.	REMARKS OR FIELD OBSERVATIONS
	160'-195' com calichification in sdy SILT									
165										
170										
			ML							
175										
180										
185										
	186'-190' SAND, silty, hard, caliche cemented, vf-mg w/tr c-vc		SM							
190										
	186-217 SILT, sdy, vf-fg, mod yell brn (10YR 9/4).									
195			ML							
	190'-195' com-abu calichification									

EXPLANATION

- ▼ Water Table (24 Hour)
- ▽ Water Table (Time of Boring)
- PID Photoionization Detection (ppm)
- NO. Identifies Sample by Number
- TYPE Sample Collection Method

SPLIT-BARREL · AUGER · ROCK CORE · THIN-WALLED TUBE · CONTINUOUS SAMPLER · NO RECOVERY

- DEPTH Depth Top and Bottom of Sample
- REC. Actual Length of Recovered Sample in Feet

GRAPHIC LOG LEGEND

CLAY · DEBRIS FILL · SILT · HIGHLY ORGANIC (PEAT) · SAND · SANDY CLAY · GRAVEL · CLAYEY SAND · SILTY CLAY · CLAYEY SILT

DATE DRILLED	PAGE
9/25-9/26/99	5 of 8

DRILLING METHOD: ARCH

DRILLED BY: BEYLIK

LOGGED BY: E. KRISH

EXISTING GRADE ELEVATION (FT. AMSL)

LOCATION OR GRID COORDINATES

SOIL BORING LOG KM-5655-B

KERR-McGEE CORPORATION Hydrology Dept. - S&EA Division	KM SUBSIDIARY KMCC	LOCATION HENDERSON	BORING NUMBER TR7

DEPTH IN FEET	LITHOLOGIC DESCRIPTION	GRAPHIC LOG	UNIFIED SOIL FIELD CLASS.	BLOWS PER 6"	PID (ppm)	SOIL SAMPLE NO.	TYPE	DEPTH	REC.	REMARKS OR FIELD OBSERVATIONS
205 210 215 217	210'-217' hard, com caliehtification		ML							MC fg
220	217-220 GRAVEL, sdy, calcareous, f-vc		GW							pea gravel size volc grains MC cg
225	220-225 SAND, cly vf-m w/vc, cemented 223'-225'		SM							
230 235	225-292' TD Gravel, sdy, vf-vc, up to 2"-3" diam. volc Com caliche cement, hard, fractured.		GW							

EXPLANATION

- ▼ Water Table (24 Hour)
- ▽ Water Table (Time of Boring)
- PID Photoionization Detection (ppm)
- NO. Identifies Sample by Number
- TYPE Sample Collection Method

SPLIT-BARREL; AUGER; ROCK CORE; THIN-WALLED TUBE; CONTINUOUS SAMPLER; NO RECOVERY

- DEPTH Depth Top and Bottom of Sample
- REC. Actual Length of Recovered Sample in Feet

GRAPHIC LOG LEGEND

CLAY; DEBRIS FILL; SILT; HIGHLY ORGANIC (PEAT); SAND; SANDY CLAY; GRAVEL; CLAYEY SAND; SILTY CLAY; CLAYEY SILT

DATE DRILLED	PAGE
9/25-9/26/99	6 of 8

DRILLING METHOD: ARCH

DRILLED BY: BEYLIK

LOGGED BY: E. KRISH

EXISTING GRADE ELEVATION (FT. AMSL)

LOCATION OR GRID COORDINATES

SOIL BORING LOG KM-5655-B

KERR-McGEE CORPORATION Hydrology Dept. - S&EA Division	KM SUBSIDIARY KMCC	LOCATION HENDERSON	BORING NUMBER TR7

DEPTH IN FEET	LITHOLOGIC DESCRIPTION	GRAPHIC LOG	UNIFIED SOIL FIELD CLASS.	BLOWS PER 6"	PID (ppm)	SOIL SAMPLE NO.	TYPE	DEPTH	REC.	REMARKS OR FIELD OBSERVATIONS
245										
250										
255			GW							
260										
265										
270	270 - 286 silty water w/ gravels due to v. thin silty interbeds ?									
275			GM							

EXPLANATION

- ▼ Water Table (24 Hour)
- ▽ Water Table (Time of Boring)
- PID Photoionization Detection (ppm)
- NO. Identifies Sample by Number
- TYPE Sample Collection Method

SPLIT-BARREL · AUGER · ROCK CORE · THIN-WALLED TUBE · CONTINUOUS SAMPLER · NO RECOVERY

- DEPTH Depth Top and Bottom of Sample
- REC. Actual Length of Recovered Sample in Feet

GRAPHIC LOG LEGEND

CLAY · DEBRIS FILL · SILT · HIGHLY ORGANIC (PEAT) · SAND · SANDY CLAY · GRAVEL · CLAYEY SAND · SILTY CLAY · CLAYEY SILT

DATE DRILLED	PAGE
9/25-9/26/99	7 of 8

DRILLING METHOD: ARCH

DRILLED BY: BEYLIK

LOGGED BY: E. KRISH

EXISTING GRADE ELEVATION (FT. AMSL)

LOCATION OR GRID COORDINATES

SOIL BORING LOG KM-5655-B

KERR-McGEE CORPORATION Hydrology Dept. - S&EA Division	KM SUBSIDIARY KMCC	LOCATION HENDERSON	BORING NUMBER TR7

DEPTH IN FEET	LITHOLOGIC DESCRIPTION	GRAPHIC LOG	UNIFIED SOIL FIELD CLASS.	BLOWS PER 6"	PID (ppm)	SOIL SAMPLE NO.	TYPE	DEPTH	REC.	REMARKS OR FIELD OBSERVATIONS
285			GM							
292			GW							
	TD 292'									

EXPLANATION

- ▼ Water Table (24 Hour)
- ▽ Water Table (Time of Boring)
- PID Photoionization Detection (ppm)
- NO. Identifies Sample by Number
- TYPE Sample Collection Method

SPLIT-BARREL; AUGER; ROCK CORE; THIN-WALLED TUBE; CONTINUOUS SAMPLER; NO RECOVERY

- DEPTH Depth Top and Bottom of Sample
- REC. Actual Length of Recovered Sample in Feet

GRAPHIC LOG LEGEND

CLAY; SILT; SAND; GRAVEL; SILTY CLAY; CLAYEY SILT; DEBRIS FILL; HIGHLY ORGANIC (PEAT); SANDY CLAY; CLAYEY SAND; ____; ____

DATE DRILLED	PAGE
9/25-9/26/99	8 of 8

DRILLING METHOD: ARCH

DRILLED BY: BEYLIK

LOGGED BY: E. KRISH

EXISTING GRADE ELEVATION (FT AMSL):

LOCATION OR GRID COORDINATES:

KERR-McGEE CORPORATION
HYDROLOGY DEPARTMENT
MONITORING WELL INSTALLATION DIAGRAM

Protective Pipe
Yes ☒ No ☐
Steel ☒ PVC ☐
Surveying Pin ?
Yes ☐ No ☒

Casing Cap Vent ? Yes ☐ No ☐
Lock ? Yes ☐ No ☐
Weep Hole ? Yes ☐ No ☐
Concrete Pad _____ Ft. x _____ Ft. x _____ Inches

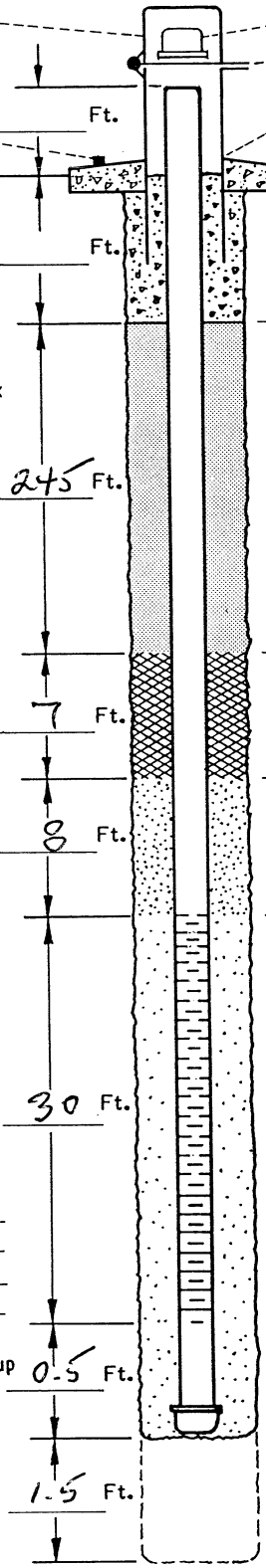

		DEPTH BELOW GRADE	DEPTH FROM TOP OF CASING
Ft.			
Concrete	Ft.	0	
Cement/Bentonite Grout Mix: Yes ☒ No ☐; 5.5 Gallons Water to 94Lb. Bag Cement & 3-5 Lb. Bentonite Powder	245 Ft.	245	
Bentonite Seal: Pellets ☒ Slurry ☐	7 Ft.	252	
Filter Pack Above Screen	8 Ft.	260	
FILTER PACK MATERIAL: Silica Sand ☒; Washed Sand ☐; Pea Gravel ☐; Sand Size #3	30 Ft.	290	
Dense Phase Sampling Cup; Bottom Plug Yes ☒ No ☐	0.5 Ft.	290.5	
Overdrilled Material Backfill: Grout ☐ Sand ☒ Caved Material ☐	1.5 Ft.	292	

Other: _____

DRILLING INFORMATION:

1. Borehole Diameter= 9 5/8 Inches.
2. Were Drilling Additives Used ? Yes ☐ No ☒
   Revert ☐ Bentonite ☐ Water ☐
   Solid Auger ☐ Hollow Stem Auger ☐
3. Was Outer Steel Casing Used ? Yes ☐ No ☒
   Depth= _____ to _____ Feet.
4. Borehole Diameter for Outer Casing _____ Inches.

WELL CONSTRUCTION INFORMATION:

1. Type of Casing: PVC ☒ Galvanized ☐ Teflon ☐
   Stainless ☐ Other _____
2. Type of Casing Joints: Screw-Couple ☒ Glue-Couple ☐ Other _____
3. Type of Well Screen: PVC ☒ Galvanized ☐
   Stainless ☐ Teflon ☐ Other _____
4. Diameter of Casing and Well Screen:
   Casing 4 Inches, Screen 4 Inches.
5. Slot Size of Screen: .020
6. Type of Screen Perforation: Factory Slotted ☒
   Hacksaw ☐ Drilled ☐ Other _____
7. Installed Protector Pipe w/Lock: Yes ☒ No ☐

WELL DEVELOPMENT INFORMATION:

1. How was Well Developed ? Bailing ☐ Pumping ☒
   Air Surging (Air or Nitrogen) ☐ Other _____
2. Time Spent on Well Development ?
   45 / _____ Minutes/~~Hours~~
3. Approximate Water Volume Removed ? 510 Gallons
4. Water Clarity Before Development ? Clear ☒
   Turbid ☐ Opaque ☐
5. Water Clarity After Development ? Clear ☒
   Turbid ☐ Opaque ☐
6. Did Water have Odor ? Yes ☐ No ☒
   If Yes, Describe _____
7. Did Water have any Color ? Yes ☐ No ☒
   If Yes , Describe _____

WATER LEVEL INFORMATION:

Water Level Summary (From ~~Top of Casing~~) ng

During Drilling _____ Ft. Date _____
Before Development -39.5 Ft. Date 10-7-99
After Development -37.85 Ft. Date 1-13-00

Driller/Firm Schoonmaker/Boylik Drill Rig Type DTW 70 Date Installed 9-27-99
Drill Crew EBERLY, PADILLA Well No. TR7 Kerr-McGee Hydrologist E. KRISH

SOIL BORING LOG KM-5655-B

KERR-McGEE CORPORATION Hydrology Dept. - S&EA Division	KM SUBSIDIARY KMCC	LOCATION HENDERSON	BORING NUMBER TR8

DEPTH IN FEET	LITHOLOGIC DESCRIPTION	GRAPHIC LOG	UNIFIED SOIL FIELD CLASS.	BLOWS PER 6"	PID (ppm)	SOIL SAMPLE NO.	TYPE	DEPTH	REC.	REMARKS OR FIELD OBSERVATIONS
	HOLE LOCATED 12 ft South of TR7 - see TR7 for Lithology TD 98'									
	NOTE: IN TR8 first MC gravel started @ 62' and ended at 93 ft.									

EXPLANATION

- ▼ Water Table (24 Hour)
- ▽ Water Table (Time of Boring)
- PID Photoionization Detection (ppm)
- NO. Identifies Sample by Number
- TYPE Sample Collection Method

SPLIT-BARREL | AUGER | ROCK CORE | THIN-WALLED TUBE | CONTINUOUS SAMPLER | NO RECOVERY

- DEPTH Depth Top and Bottom of Sample
- REC. Actual Length of Recovered Sample in Feet

GRAPHIC LOG LEGEND

CLAY | DEBRIS FILL | SILT | HIGHLY ORGANIC (PEAT) | SAND | SANDY CLAY | GRAVEL | CLAYEY SAND | SILTY CLAY | CLAYEY SILT

DATE DRILLED	PAGE
9/30/99	1 of 1

DRILLING METHOD: ARCH

DRILLED BY: BEYLIK

LOGGED BY: E. KRISH

EXISTING GRADE ELEVATION (FT. AMSL)

LOCATION OR GRID COORDINATES

KERR-McGEE CORPORATION
HYDROLOGY DEPARTMENT
MONITORING WELL INSTALLATION DIAGRAM

Protective Pipe
Yes ☒ No ☐
Steel ☒ PVC ☐
Surveying Pin ?
Yes ☐ No ☒

Casing Cap Vent ? Yes ☐ No ☐
Lock ? Yes ☐ No ☐
Weep Hole ? Yes ☐ No ☐
Concrete Pad _____ Ft. x _____ Ft. x _____ Inches

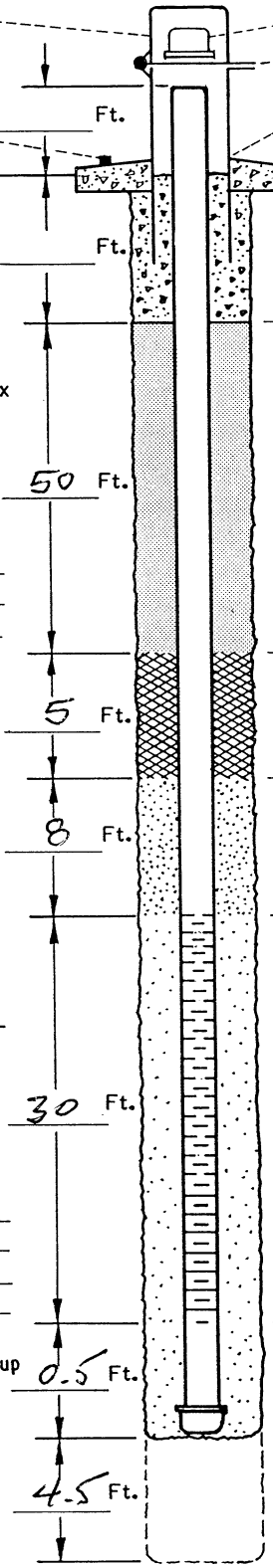

	Ft.	DEPTH BELOW GRADE	DEPTH FROM TOP OF CASING
Concrete		0	
Cement/Bentonite Grout Mix (Yes ☒ No ☐; 5.5 Gallons Water to 94Lb. Bag Cement & 3-5 Lb. Bentonite Powder; Other: ____)	50	50	
Bentonite Seal (Pellets ☒ Slurry ☐)	5	55	
Filter Pack Above Screen	8	63	
FILTER PACK MATERIAL (Silica Sand ☐ Washed Sand ☐ Pea Gravel ☐ Other: ____ Sand Size #3)	30	93	
Dense Phase Sampling Cup Bottom Plug (Yes ☒ No ☐)	0.5	93.5	
Overdrilled Material Backfill (Grout ☐ Sand ☒ Caved Material ☐ Other: ____)	4.5	98	

DRILLING INFORMATION:

1. Borehole Diameter= 9 5/8 Inches.
2. Were Drilling Additives Used ? Yes ☐ No ☒
   Revert ☐ Bentonite ☐ Water ☐
   Solid Auger ☐ Hollow Stem Auger ☐
3. Was Outer Steel Casing Used ? Yes ☐ No ☒
   Depth= _____ to _____ Feet.
4. Borehole Diameter for Outer Casing _____ Inches.

WELL CONSTRUCTION INFORMATION:

1. Type of Casing: PVC ☒ Galvanized ☐ Teflon ☐
   Stainless ☐ Other _____
2. Type of Casing Joints: Screw-Couple ☒ Glue-Couple ☐ Other _____
3. Type of Well Screen: PVC ☒ Galvanized ☐
   Stainless ☐ Teflon ☐ Other _____
4. Diameter of Casing and Well Screen:
   Casing 4 Inches, Screen 4 Inches.
5. Slot Size of Screen: .020
6. Type of Screen Perforation: Factory Slotted ☒
   Hacksaw ☐ Drilled ☐ Other _____
7. Installed Protector Pipe w/Lock: Yes ☒ No ☐

WELL DEVELOPMENT INFORMATION:

1. How was Well Developed ? Bailing ☐ Pumping ☒
   Air Surging (Air or Nitrogen) ☐ Other _____
2. Time Spent on Well Development ?
   45 / _____ Minutes/~~Hours~~
3. Approximate Water Volume Removed ? 425 Gallons
4. Water Clarity Before Development ? Clear ☒
   Turbid ☐ Opaque ☐
5. Water Clarity After Development ? Clear ☒
   Turbid ☐ Opaque ☐
6. Did Water have Odor ? Yes ☐ No ☒
   If Yes, Describe _____
7. Did Water have any Color ? Yes ☐ No ☒
   If Yes , Describe _____

WATER LEVEL INFORMATION:

Water Level Summary (From ~~Top of Casing~~) ng

During Drilling _____ Ft. Date _____
Before Development -52.8 Ft. Date 10-7-99
After Development -53.0 Ft. Date 1-13-00

Driller/Firm Schoonmaker/Beylik Drill Rig Type DTW70 Date Installed 9-30-99
Drill Crew Eberly, Padilla Well No. TR8 Kerr-McGee Hydrologist E KRISH

SOIL BORING LOG KM-5655-B

KERR-McGEE CORPORATION Hydrology Dept. - S&EA Division	KM SUBSIDIARY KMC LLC	LOCATION HENDERSON, NV	BORING NUMBER TR9

DEPTH IN FEET	LITHOLOGIC DESCRIPTION	GRAPHIC LOG	UNIFIED SOIL FIELD CLASS.	BLOWS PER 6"	PID (ppm)	SOIL SAMPLE NO.	TYPE	DEPTH	REC.	REMARKS OR FIELD OBSERVATIONS
0	0-12 GRAVEL, sdy, mod yell brn (10YR 5/2), 20-25% vf-vc sd, A-SA. Gravels (volcanics) up to 2-4" Com. caliche coatings Boulders (1'-2') near surface		GW							
12	12-31 SAND, gravelly, mod yell brn and gry orange (10YR 7/4). 20% pea gravel (volcanics) A-SA. Sand vf-cg. mod-com caliche 16-20 hard caliche zone		SW							
31	31-45 SAND, silty, Gry oran to pale yell brn (10YR 6/4). 25% silt. f-m w/cg. A-SR. Com caliche coatings		SM							

EXPLANATION

- ▼ Water Table (24 Hour)
- ▽ Water Table (Time of Boring)
- PID Photoionization Detection (ppm)
- NO. Identifies Sample by Number
- TYPE Sample Collection Method

SPLIT-BARREL; AUGER; ROCK CORE; THIN-WALLED TUBE; CONTINUOUS SAMPLER; NO RECOVERY

- DEPTH Depth Top and Bottom of Sample
- REC. Actual Length of Recovered Sample in Feet

GRAPHIC LOG LEGEND

CLAY; DEBRIS FILL; SILT; HIGHLY ORGANIC (PEAT); SAND; SANDY CLAY; GRAVEL; CLAYEY SAND; SILTY CLAY; CLAYEY SILT

DATE DRILLED	PAGE
10-6-99	1 of 7

DRILLING METHOD: ARCH

DRILLED BY: BEYLIK

LOGGED BY: Ed KRISH

EXISTING GRADE ELEVATION (FT. AMSL)

LOCATION OR GRID COORDINATES

SOIL BORING LOG KM-5655-B

KERR-McGEE CORPORATION Hydrology Dept. - S&EA Division	KM SUBSIDIARY KMC LLC	LOCATION HENDERSON, NV	BORING NUMBER TR9

DEPTH IN FEET	LITHOLOGIC DESCRIPTION	GRAPHIC LOG	UNIFIED SOIL FIELD CLASS.	BLOWS PER 6"	PID (ppm)	SOIL SAMPLE NO.	TYPE	DEPTH	REC.	REMARKS OR FIELD OBSERVATIONS
			SM							Qal
45	45-70 SAND, sl. slty, mod yell brn (10YR 5/4), 10% silt. vf-f w trm g									MC cg
50										
	51'-70' SAND, sl. slty, pale yell brn (10YR 6/4), 10% slty. vf-f w/com c-vc. A-SR (c-vc are volc grains) - Mod calcareous									
55			SP							damp below 55'
60	52-60 com calicification									
65	68-70 com. calichification									
70	70-75 Gravel, slty, sdy volc pea gravel, pale yell brn, 40% silt matrix com. calichification		GM							
75	75'-83' SAND, sl slty as above com. calichification		SW							

EXPLANATION

- ▼ Water Table (24 Hour)
- ▽ Water Table (Time of Boring)
- PID Photoionization Detection (ppm)
- NO. Identifies Sample by Number
- TYPE Sample Collection Method

SPLIT-BARREL | AUGER | ROCK CORE | THIN-WALLED TUBE | CONTINUOUS SAMPLER | NO RECOVERY

- DEPTH Depth Top and Bottom of Sample
- REC. Actual Length of Recovered Sample in Feet

GRAPHIC LOG LEGEND

CLAY | DEBRIS FILL | SILT | HIGHLY ORGANIC (PEAT) | SAND | SANDY CLAY | GRAVEL | CLAYEY SAND | SILTY CLAY | CLAYEY SILT

DATE DRILLED	PAGE
10-6-99	2 of 7

DRILLING METHOD: ARCH

DRILLED BY: BEYLIK

LOGGED BY: ED KRISH

EXISTING GRADE ELEVATION (FT. AMSL)

LOCATION OR GRID COORDINATES

SOIL BORING LOG KM-5655-B

KERR-McGEE CORPORATION Hydrology Dept. - S&EA Division	KM SUBSIDIARY KMC LLC	LOCATION HENDERSON, NV	BORING NUMBER TR9

DEPTH IN FEET	LITHOLOGIC DESCRIPTION	GRAPHIC LOG	UNIFIED SOIL FIELD CLASS.	BLOWS PER 6"	PID (ppm)	SOIL SAMPLE NO.	TYPE	DEPTH	REC.	REMARKS OR FIELD OBSERVATIONS
83			SW							
90	83-95' Gravel. dk yell brn (10YR4/2) to brn blk (3YR2/1). Mix of volc, qtz, caliche up to 1/4" diam		GW							FIRST WTR @ 85'
95	95'-99' SAND, hard-calichified. vf-vc w/ minor granules. A-SR gry orange (10YR7/4)		SW							
99	99'-102' Gravel, as above		GW							
102	102'-106' SAND, silty, gry oran (10YR7/4), vf-f w/mior c-vc		SM							MC cg
106	106-133 SILT, sdy, cly. Gry oran (10YR7/4). 10-20% clay, 10-20% vf-vc sand (volc grains com). 10-20% sd-granule-sized caliche nodules scattered throughout		ML							MC fg
110										
115										

EXPLANATION

- ▼ Water Table (24 Hour)
- ▽ Water Table (Time of Boring)
- PID Photoionization Detection (ppm)
- NO. Identifies Sample by Number
- TYPE Sample Collection Method

SPLIT-BARREL | AUGER | ROCK CORE | THIN-WALLED TUBE | CONTINUOUS SAMPLER | NO RECOVERY

- DEPTH Depth Top and Bottom of Sample
- REC. Actual Length of Recovered Sample in Feet

GRAPHIC LOG LEGEND

CLAY | DEBRIS FILL | SILT | HIGHLY ORGANIC (PEAT) | SAND | SANDY CLAY | GRAVEL | CLAYEY SAND | SILTY CLAY | CLAYEY SILT

DATE DRILLED	PAGE
10-6-99	3 of 7

DRILLING METHOD: ARCH

DRILLED BY: BEYLIK

LOGGED BY: ED KRISH

EXISTING GRADE ELEVATION (FT. AMSL)

LOCATION OR GRID COORDINATES

SOIL BORING LOG KM-5655-B

KERR-McGEE CORPORATION Hydrology Dept. - S&EA Division	KM SUBSIDIARY KMC LLC	LOCATION HENDERSON, NV	BORING NUMBER TR9

DEPTH IN FEET	LITHOLOGIC DESCRIPTION	GRAPHIC LOG	UNIFIED SOIL FIELD CLASS.	BLOWS PER 6"	PID (ppm)	SOIL SAMPLE NO.	TYPE	DEPTH	REC.	REMARKS OR FIELD OBSERVATIONS
125			ML							
130										
135	133-168 SILT, sdy-cly, grg oran, with thin layers of sdy volc gravel (1/2'-1' thick)									
140	@133' gravel lens mod sd-granule-size caliche nodules scattered throughout									
145	@143' gravel lens									
	@147' gravel lens		ML							
	@149' gravel lens									
150	149'-156' com calichification									
	@153' gravel lens									
155										
	@157' gravel lens									

EXPLANATION

- ▼ Water Table (24 Hour)
- ▽ Water Table (Time of Boring)
- PID Photoionization Detection (ppm)
- NO. Identifies Sample by Number
- TYPE Sample Collection Method

SPLIT-BARREL; AUGER; ROCK CORE; THIN-WALLED TUBE; CONTINUOUS SAMPLER; NO RECOVERY

- DEPTH Depth Top and Bottom of Sample
- REC. Actual Length of Recovered Sample in Feet

GRAPHIC LOG LEGEND

CLAY; SILT; SAND; GRAVEL; SILTY CLAY; CLAYEY SILT; DEBRIS FILL; HIGHLY ORGANIC (PEAT); SANDY CLAY; CLAYEY SAND

DATE DRILLED	10-6-99
PAGE	4 of 7
DRILLING METHOD	ARCH
DRILLED BY	BEYLIK
LOGGED BY	ED KRISH
EXISTING GRADE ELEVATION (FT AMSL)	
LOCATION OR GRID COORDINATES	

SOIL BORING LOG KM-5655-B

KERR-McGEE CORPORATION Hydrology Dept. - S&EA Division	KM SUBSIDIARY KMC LLC	LOCATION HENDERSON, NV	BORING NUMBER TR9

DEPTH IN FEET	LITHOLOGIC DESCRIPTION	GRAPHIC LOG	UNIFIED SOIL FIELD CLASS.	BLOWS PER 6"	PID (ppm)	SOIL SAMPLE NO.	TYPE	DEPTH	REC.	REMARKS OR FIELD OBSERVATIONS
	@163' gravel lens		ML							
165										
	@167' gravel lens									
168										
170	168'-212' SILT, sdy, gry oran, 10-20% vf-f w/ tr-sp c-vc (volc) grains									
175										
180	180-186 massive caliche zone		ML							
185										
	186-195 com caliche									
190										
195										

EXPLANATION

- ▼ Water Table (24 Hour)
- ▽ Water Table (Time of Boring)
- PID Photoionization Detection (ppm)
- NO. Identifies Sample by Number
- TYPE Sample Collection Method

SPLIT-BARREL · AUGER · ROCK CORE · THIN-WALLED TUBE · CONTINUOUS SAMPLER · NO RECOVERY

DEPTH Depth Top and Bottom of Sample
REC. Actual Length of Recovered Sample in Feet

GRAPHIC LOG LEGEND

CLAY · SILT · SAND · GRAVEL · SILTY CLAY · CLAYEY SILT · DEBRIS FILL · HIGHLY ORGANIC (PEAT) · SANDY CLAY · CLAYEY SAND

DATE DRILLED	PAGE
10-7-99	5 of 7

DRILLING METHOD: ARCH

DRILLED BY: BEYLIK

LOGGED BY: ED KRISH

EXISTING GRADE ELEVATION (FT AMSL)

LOCATION OR GRID COORDINATES

SOIL BORING LOG KM-5655-B

KERR-McGEE CORPORATION Hydrology Dept. - S&EA Division	KM SUBSIDIARY KMC LLC	LOCATION HENDERSON	BORING NUMBER TR9

DEPTH IN FEET	LITHOLOGIC DESCRIPTION	GRAPHIC LOG	UNIFIED SOIL FIELD CLASS.	BLOWS PER 6"	PID (ppm)	SOIL SAMPLE NO.	TYPE	DEPTH	REC.	REMARKS OR FIELD OBSERVATIONS
205	@ 203' 1/2'-1' gravel volc (pea gravel) 204-212 Cvm caliche @ 207' 1/2'-1' volc gravel (pea gravel)		ML							
210										MC fg
215	212-250 TD GRAVEL sdy. Grayish and dusky yell brn (10YR 2/2) 10-20% sd (vf-vc) matrix gravels (volc) granule to 1/2" diam		GW							MC cg
220	212-220 uncemented abund. WTR									
225	220-250 caliche cemented									
230	228'-230' silty gravel zone									
235										
	@ 240' layer of cobbles									

EXPLANATION

- ▼ Water Table (24 Hour)
- ▽ Water Table (Time of Boring)
- PID Photoionization Detection (ppm)
- NO. Identifies Sample by Number
- TYPE Sample Collection Method

SPLIT-BARREL; AUGER; ROCK CORE; THIN-WALLED TUBE; CONTINUOUS SAMPLER; NO RECOVERY

DEPTH Depth Top and Bottom of Sample
REC. Actual Length of Recovered Sample in Feet

GRAPHIC LOG LEGEND

CLAY; SILT; SAND; GRAVEL; SILTY CLAY; CLAYEY SILT; DEBRIS FILL; HIGHLY ORGANIC (PEAT); SANDY CLAY; CLAYEY SAND

DATE DRILLED	PAGE
10-6-99	6 of 7

DRILLING METHOD: ARCH

DRILLED BY: BEYLIK

LOGGED BY: ED KRISH

EXISTING GRADE ELEVATION (FT. AMSL)

LOCATION OR GRID COORDINATES

SOIL BORING LOG KM-5655-B

KERR-McGEE CORPORATION Hydrology Dept. - S&EA Division	KM SUBSIDIARY KMC LLC	LOCATION HENDERSON	BORING NUMBER TR9

DEPTH IN FEET	LITHOLOGIC DESCRIPTION	GRAPHIC LOG	UNIFIED SOIL FIELD CLASS.	BLOWS PER 6"	PID (ppm)	SOIL SAMPLE NO.	TYPE	DEPTH	REC.	REMARKS OR FIELD OBSERVATIONS
245	245-247 silty matrix @ 247' layer of cobbles		GW							
250	TD 250									

EXPLANATION

- ▼ Water Table (24 Hour)
- ▽ Water Table (Time of Boring)
- PID Photoionization Detection (ppm)
- NO. Identifies Sample by Number
- TYPE Sample Collection Method

SPLIT-BARREL; AUGER; ROCK CORE; THIN-WALLED TUBE; CONTINUOUS SAMPLER; NO RECOVERY

DEPTH Depth Top and Bottom of Sample
REC. Actual Length of Recovered Sample in Feet

GRAPHIC LOG LEGEND

CLAY; SILT; SAND; GRAVEL; SILTY CLAY; CLAYEY SILT; DEBRIS FILL; HIGHLY ORGANIC (PEAT); SANDY CLAY; CLAYEY SAND; _____; _____

DATE DRILLED	PAGE
10-6-99	7 of 7

DRILLING METHOD: ARCH

DRILLED BY: BEYLIK

LOGGED BY: ED KRISH

EXISTING GRADE ELEVATION (FT. AMSL)

LOCATION OR GRID COORDINATES

KERR-McGEE CORPORATION
HYDROLOGY DEPARTMENT
MONITORING WELL INSTALLATION DIAGRAM

Protective Pipe
Yes ☒ No ☐
Steel ☒ PVC ☐
Surveying Pin ?
Yes ☐ No ☒

Casing Cap Vent ? Yes ☐ No ☐
Lock ? Yes ☐ No ☐
Weep Hole ? Yes ☐ No ☐
Concrete Pad _____ Ft. x _____ Ft. x _____ Inches

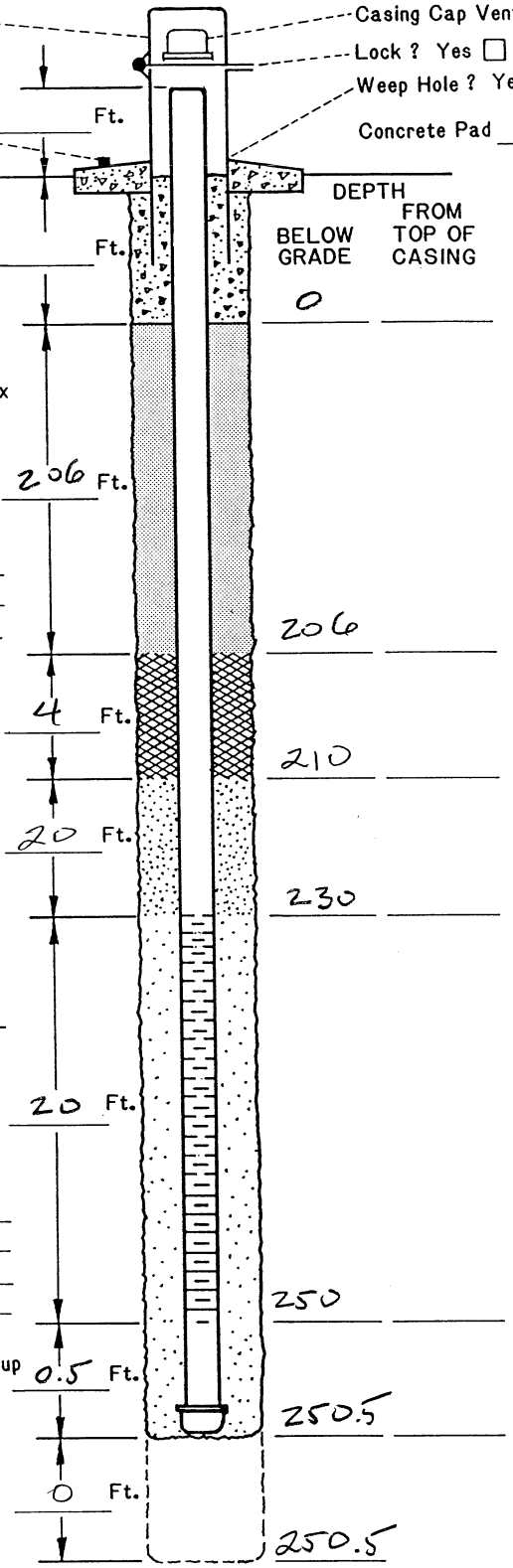

Concrete _____ Ft.

Cement/Bentonite Grout Mix
Yes ☒ No ☐
5.5 Gallons Water to 94Lb. Bag Cement & 3-5 Lb. Bentonite Powder
Other: _____

206 Ft.

Bentonite Seal
Pellets ☒ Slurry ☐

4 Ft.

Filter Pack Above Screen

20 Ft.

FILTER PACK MATERIAL
Silica Sand ☒
Washed Sand ☐
Pea Gravel ☐
Other: _____
Sand Size #3

20 Ft.

Dense Phase Sampling Cup
Bottom Plug
Yes ☒ No ☐

0.5 Ft.

Overdrilled Material Backfill
Grout ☐ Sand ☒
Caved Material ☐
Other: _____

0 Ft.

DRILLING INFORMATION:

1. Borehole Diameter= 9 5/8 Inches.
2. Were Drilling Additives Used ? Yes ☐ No ☒
   Revert ☐ Bentonite ☐ Water ☐
   Solid Auger ☐ Hollow Stem Auger ☐
3. Was Outer Steel Casing Used ? Yes ☐ No ☒
   Depth= _____ to _____ Feet.
4. Borehole Diameter for Outer Casing _____ Inches.

WELL CONSTRUCTION INFORMATION:

1. Type of Casing: PVC ☒ Galvanized ☐ Teflon ☐
   Stainless ☐ Other _____
2. Type of Casing Joints: Screw-Couple ☒ Glue-Couple ☐ Other _____
3. Type of Well Screen: PVC ☒ Galvanized ☐
   Stainless ☐ Teflon ☐ Other _____
4. Diameter of Casing and Well Screen:
   Casing 4" Inches, Screen 4" Inches.
5. Slot Size of Screen: 0.020
6. Type of Screen Perforation: Factory Slotted ☒
   Hacksaw ☐ Drilled ☐ Other _____
7. Installed Protector Pipe w/Lock: Yes ☐ No ☐

WELL DEVELOPMENT INFORMATION:

1. How was Well Developed ? Bailing ☐ Pumping ☒
   Air Surging (Air or Nitrogen) ☐ Other _____
2. Time Spent on Well Development ?
   60 / _____ Minutes/~~Hours~~
3. Approximate Water Volume Removed ? 720 Gallons
4. Water Clarity Before Development ? Clear ☒
   Turbid ☐ Opaque ☐
5. Water Clarity After Development ? Clear ☒
   Turbid ☐ Opaque ☐
6. Did Water have Odor ? Yes ☐ No ☒
   If Yes, Describe _____
7. Did Water have any Color ? Yes ☐ No ☒
   If Yes, Describe _____

WATER LEVEL INFORMATION:

Water Level Summary (From ~~Top of Casing~~) ng

During Drilling _____ Ft. Date _____
Before Development -64.0 Ft. Date 10-7-99
After Development -63.6 Ft. Date 1-13-00

Driller/Firm Schoonmaker/Baylik Drill Rig Type DTW-70 Date Installed 10-7-99
Drill Crew Eberly/Padilla Well No. TR 9 Kerr-McGee Hydrologist ED KRISH

SOIL BORING LOG KM-5655-B

KERR-McGEE CORPORATION Hydrology Dept. - S&EA Division	KM SUBSIDIARY KMC LLC	LOCATION HENDERSON	BORING NUMBER TR 10

DEPTH IN FEET	LITHOLOGIC DESCRIPTION	GRAPHIC LOG	UNIFIED SOIL FIELD CLASS.	BLOWS PER 6"	PID (ppm)	SOIL SAMPLE NO.	TYPE	DEPTH	REC.	REMARKS OR FIELD OBSERVATIONS
	TOTAL DEPTH 100'									
	SEE LOG FOR TR-9 FOR LITHOLOGY									

EXPLANATION

- ▼ Water Table (24 Hour)
- ▽ Water Table (Time of Boring)
- PID Photoionization Detection (ppm)
- NO. Identifies Sample by Number
- TYPE Sample Collection Method

SPLIT-BARREL · AUGER · ROCK CORE · THIN-WALLED TUBE · CONTINUOUS SAMPLER · NO RECOVERY

DEPTH Depth Top and Bottom of Sample
REC. Actual Length of Recovered Sample in Feet

GRAPHIC LOG LEGEND

CLAY · DEBRIS FILL · SILT · HIGHLY ORGANIC (PEAT) · SAND · SANDY CLAY · GRAVEL · CLAYEY SAND · SILTY CLAY · CLAYEY SILT

DATE DRILLED	PAGE
10-8-99	1 of 1

DRILLING METHOD: ARCH

DRILLED BY: BEYLIK

LOGGED BY: Ed Krish

EXISTING GRADE ELEVATION (FT AMSL)

LOCATION OR GRID COORDINATES

KERR-McGEE CORPORATION
HYDROLOGY DEPARTMENT
MONITORING WELL INSTALLATION DIAGRAM

Protective Pipe
Yes ☒ No ☐
Steel ☒ PVC ☐
Surveying Pin ?
Yes ☐ No ☒

Casing Cap Vent ? Yes ☐ No ☐
Lock ? Yes ☐ No ☐
Weep Hole ? Yes ☐ No ☐
Concrete Pad _____ Ft. x _____ Ft. x _____ Inches

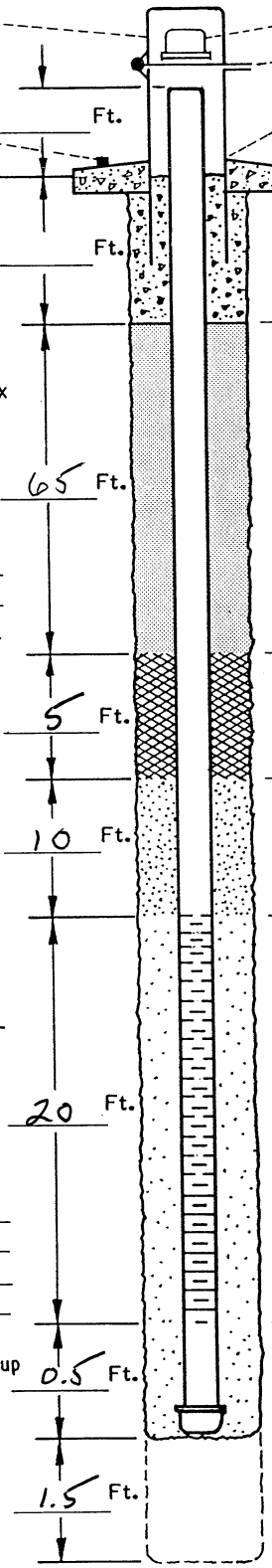

	Ft.	DEPTH BELOW GRADE	DEPTH FROM TOP OF CASING
Ft.			
Concrete	Ft.	0	
Cement/Bentonite Grout Mix	65 Ft.	65	
Bentonite Seal	5 Ft.	70	
Filter Pack Above Screen	10 Ft.	80	
FILTER PACK MATERIAL	20 Ft.	100	
Dense Phase Sampling Cup	0.5 Ft.	101.5	
Overdrilled Material Backfill	1.5 Ft.	102	

Cement/Bentonite Grout Mix
Yes ☒ No ☐
5.5 Gallons Water to 94Lb. Bag Cement & 3-5 Lb. Bentonite Powder
Other: _____

Bentonite Seal
Pellets ☒ Slurry ☐

Filter Pack Above Screen

FILTER PACK MATERIAL
Silica Sand ☒
Washed Sand ☐
Pea Gravel ☐
Other: _____
Sand Size 3 mesh

Dense Phase Sampling Cup
Bottom Plug
Yes ☒ No ☐

Overdrilled Material Backfill
Grout ☐ Sand ☒
Caved Material ☐
Other: _____

DRILLING INFORMATION:

1. Borehole Diameter= 9 5/8 Inches.
2. Were Drilling Additives Used ? Yes ☐ No ☒
   Revert ☐ Bentonite ☐ Water ☐
   Solid Auger ☐ Hollow Stem Auger ☐
3. Was Outer Steel Casing Used ? Yes ☐ No ☒
   Depth= _____ to _____ Feet.
4. Borehole Diameter for Outer Casing 9 5/8 Inches.

WELL CONSTRUCTION INFORMATION:

1. Type of Casing: PVC ☒ Galvanized ☐ Teflon ☐
   Stainless ☐ Other _____
2. Type of Casing Joints: Screw-Couple ☒ Glue-Couple ☐ Other _____
3. Type of Well Screen: PVC ☒ Galvanized ☐
   Stainless ☐ Teflon ☐ Other _____
4. Diameter of Casing and Well Screen:
   Casing 4" Inches, Screen 4" Inches.
5. Slot Size of Screen: 0.02
6. Type of Screen Perforation: Factory Slotted ☒
   Hacksaw ☐ Drilled ☐ Other _____
7. Installed Protector Pipe w/Lock: Yes ☒ No ☐

WELL DEVELOPMENT INFORMATION:

1. How was Well Developed ? Bailing ☐ Pumping ☒
   Air Surging (Air or Nitrogen) ☐ Other _____
2. Time Spent on Well Development ?
   45 / _____ ~~Minutes~~/Hours
3. Approximate Water Volume Removed ? 560 Gallons
4. Water Clarity Before Development ? Clear ☒
   Turbid ☐ Opaque ☐
5. Water Clarity After Development ? Clear ☒
   Turbid ☐ Opaque ☐
6. Did Water have Odor ? Yes ☐ No ☒
   If Yes, Describe _____
7. Did Water have any Color ? Yes ☐ No ☒
   If Yes, Describe _____

WATER LEVEL INFORMATION:

Water Level Summary (From ~~Top of Casing~~) ng

During Drilling _____ Ft. Date _____
Before Development -59.7 Ft. Date 10-9-99
After Development -60.1 Ft. Date 1-13-00

Driller/Firm Schoonmaker/Beylik Drill Rig Type DTW-70 Date Installed 10-8-99
Drill Crew Eberly, Padilla Well No. TR 10 Kerr-McGee Hydrologist Ed Krish

SOIL BORING LOG KM-5655-B

KERR-McGEE CORPORATION Hydrology Dept. - S&EA Division	KM SUBSIDIARY KMC LLC	LOCATION HENDERSON, NV	BORING NUMBER TR 11

DEPTH IN FEET	LITHOLOGIC DESCRIPTION	GRAPHIC LOG	UNIFIED SOIL FIELD CLASS.	BLOWS PER 6"	PID (ppm)	SOIL SAMPLE NO.	TYPE	DEPTH	REC.	REMARKS OR FIELD OBSERVATIONS
	0 - 4 GRAVEL, sdy, mod yell brn (10YR 5/4), sd vf-vc, gravel up to 1" diam. A-SR, com caliche cement		GW							
5	4-8 sand, vf-vc, A-SA		SW							
	7-8 hard caliche									
10	8-28 SAND, gravelly, gry oran (10YR 7/4) to mod yell brn (10YR 5/4). vf-vc, A-SA, gravel to to 1" diam Com. caliche cement		SP							
15										
20										
25	24-28 lg cobbles w/ com caliche, hard		GP							
30	28-32 SAND, w/ minor caliche and granules vf-vc		SW							
35	32-50 GRAVEL, hard, cemented, fractured Com caliche cement. Minor sd interbeds and in matrix Gry oran and dusky yell brn		GW							

EXPLANATION

- ▼ Water Table (24 Hour)
- ▽ Water Table (Time of Boring)
- PID Photoionization Detection (ppm)
- NO. Identifies Sample by Number
- TYPE Sample Collection Method

SPLIT-BARREL | AUGER | ROCK CORE | THIN-WALLED TUBE | CONTINUOUS SAMPLER | NO RECOVERY

DEPTH Depth Top and Bottom of Sample
REC. Actual Length of Recovered Sample in Feet

GRAPHIC LOG LEGEND

CLAY | DEBRIS FILL | SILT | HIGHLY ORGANIC (PEAT) | SAND | SANDY CLAY | GRAVEL | CLAYEY SAND | SILTY CLAY | CLAYEY SILT

DATE DRILLED	PAGE
10-10-99	1 of 7

DRILLING METHOD: ARCH

DRILLED BY: BEYLIK

LOGGED BY: Ed Krish

EXISTING GRADE ELEVATION (FT AMSL)

LOCATION OR GRID COORDINATES

SOIL BORING LOG KM-5655-B

KERR-McGEE CORPORATION Hydrology Dept. - S&EA Division	KM SUBSIDIARY KMC LLC	LOCATION Henderson, NV	BORING NUMBER TR 11

DEPTH IN FEET	LITHOLOGIC DESCRIPTION	GRAPHIC LOG	UNIFIED SOIL FIELD CLASS.	BLOWS PER 6"	PID (ppm)	SOIL SAMPLE NO.	TYPE	DEPTH	REC.	REMARKS OR FIELD OBSERVATIONS
45			GW							damp @ 42'
										WET @ 47 ▽
50	50 - 84 SILT and SILT, sdy, interbedded. brn (5YR 5/4). Non-calcareous sdy zones contain up to 25-30% vf-fg sd, A-5A		ML							ORGANIC ODOR 42'-80'
55										
60										
65										
70										
75										

EXPLANATION

- ▼ Water Table (24 Hour)
- ▽ Water Table (Time of Boring)
- PID Photoionization Detection (ppm)
- NO. Identifies Sample by Number
- TYPE Sample Collection Method

SPLIT-BARREL | AUGER | ROCK CORE | THIN-WALLED TUBE | CONTINUOUS SAMPLER | NO RECOVERY

DEPTH Depth Top and Bottom of Sample
REC. Actual Length of Recovered Sample in Feet

GRAPHIC LOG LEGEND

CLAY | DEBRIS FILL | SILT | HIGHLY ORGANIC (PEAT) | SAND | SANDY CLAY | GRAVEL | CLAYEY SAND | SILTY CLAY | CLAYEY SILT

DATE DRILLED	PAGE
10-10-99	2 of 7

DRILLING METHOD: ARCH

DRILLED BY: BEYLIK

LOGGED BY: Ed Krish

EXISTING GRADE ELEVATION (FT AMSL)

LOCATION OR GRID COORDINATES

SOIL BORING LOG KM-5655-B

KERR-McGEE CORPORATION Hydrology Dept. - S&EA Division	KM SUBSIDIARY KMC LLC	LOCATION HENDERSON, NV	BORING NUMBER TR11

DEPTH IN FEET	LITHOLOGIC DESCRIPTION	GRAPHIC LOG	UNIFIED SOIL FIELD CLASS.	BLOWS PER 6"	PID (ppm)	SOIL SAMPLE NO.	TYPE	DEPTH	REC.	REMARKS OR FIELD OBSERVATIONS
			ML							ORGANIC ODOR ENDS @ 80'
84	84-102 CLAY, silty and SILT, cly. Yell gry (5Y 7/2) and mod gry yell grn (5GY 6/2) Com thin layers and nodules of soft caliche (white)		CL							
90										
95										
100	98-102 color change to brn (5YR 5/4). w/ mod sm caliche nodules									
105	102-112 SILT, sdy brn (5YR 5/4) contains 20-25% vfg sd mod com soft caliche nodules throughout		ML							
110										
115	112'-130' SILT, brn (5YR 5/4). w/ minor sdy SILT interbeds Contains zones of hard caliche 112-117 hard caliche		ML							

EXPLANATION

- ▼ Water Table (24 Hour)
- ▽ Water Table (Time of Boring)
- PID Photoionization Detection (ppm)
- NO. Identifies Sample by Number
- TYPE Sample Collection Method

SPLIT-BARREL | AUGER | ROCK CORE | THIN-WALLED TUBE | CONTINUOUS SAMPLER | NO RECOVERY

DEPTH Depth Top and Bottom of Sample
REC. Actual Length of Recovered Sample in Feet

GRAPHIC LOG LEGEND

CLAY | DEBRIS FILL | SILT | HIGHLY ORGANIC (PEAT) | SAND | SANDY CLAY | GRAVEL | CLAYEY SAND | SILTY CLAY | CLAYEY SILT

DATE DRILLED	PAGE
10-10-99	3 of 7

DRILLING METHOD: ARCH

DRILLED BY: BEYLIK

LOGGED BY: Ed KRISH

EXISTING GRADE ELEVATION (FT AMSL)

LOCATION OR GRID COORDINATES

SOIL BORING LOG KM-5655-B

KERR-McGEE CORPORATION Hydrology Dept. - S&EA Division	KM SUBSIDIARY KMC LLC	LOCATION HENDERSON	BORING NUMBER TR 11

DEPTH IN FEET	LITHOLOGIC DESCRIPTION	GRAPHIC LOG	UNIFIED SOIL FIELD CLASS.	BLOWS PER 6"	PID (ppm)	SOIL SAMPLE NO.	TYPE	DEPTH	REC.	REMARKS OR FIELD OBSERVATIONS
	@117' 1/2' of volc granules and nodular caliche									
125			ML							
130	130-158 SILT, sdy brn, 25-30% vf-fg sd in matrix									
135	w/ scattered sm caliche nodules scattered throughout		ML							
140										
145	140-158 hard dense calicification									
150										
155										
158	158-165 SAND, silty brn. vf-fg, A-SA, 30%		SM							

EXPLANATION

- ▼ Water Table (24 Hour)
- ▽ Water Table (Time of Boring)
- PID Photoionization Detection (ppm)
- NO. Identifies Sample by Number
- TYPE Sample Collection Method

SPLIT-BARREL | AUGER | ROCK CORE | THIN-WALLED TUBE | CONTINUOUS SAMPLER | NO RECOVERY

DEPTH Depth Top and Bottom of Sample
REC. Actual Length of Recovered Sample in Feet

GRAPHIC LOG LEGEND

CLAY | DEBRIS FILL | SILT | HIGHLY ORGANIC (PEAT) | SAND | SANDY CLAY | GRAVEL | CLAYEY SAND | SILTY CLAY | CLAYEY SILT

DATE DRILLED	PAGE
10-10-99	4 of 7

DRILLING METHOD: ARCH

DRILLED BY: BEYLIK

LOGGED BY: ED KRISH

EXISTING GRADE ELEVATION (FT AMSL)

LOCATION OR GRID COORDINATES

SOIL BORING LOG KM-5655-B

KERR-McGEE CORPORATION Hydrology Dept. - S&EA Division	KM SUBSIDIARY KMC LLC	LOCATION HENDERSON, NV	BORING NUMBER TR11

DEPTH IN FEET	LITHOLOGIC DESCRIPTION	GRAPHIC LOG	UNIFIED SOIL FIELD CLASS.	BLOWS PER 6"	PID (ppm)	SOIL SAMPLE NO.	TYPE	DEPTH	REC.	REMARKS OR FIELD OBSERVATIONS
	silt in matrix.		SM							
165	165-170 SILT, w/ minor sdy silt. brn		ML							
170	170-205 SAND, silty, brn, vf-fg, A-SA, Com caliche cement throughout.		SM							
175										
180	180-185 contains 10-20% vc-granule size volc grains									
185										
190	190-205 Abu hard caliche in sand									
195										

EXPLANATION

- ▼ Water Table (24 Hour)
- ▽ Water Table (Time of Boring)
- PID Photoionization Detection (ppm)
- NO. Identifies Sample by Number
- TYPE Sample Collection Method

SPLIT-BARREL | AUGER | ROCK CORE | THIN-WALLED TUBE | CONTINUOUS SAMPLER | NO RECOVERY

DEPTH Depth Top and Bottom of Sample
REC. Actual Length of Recovered Sample in Feet

GRAPHIC LOG LEGEND

CLAY | DEBRIS FILL | SILT | HIGHLY ORGANIC (PEAT) | SAND | SANDY CLAY | GRAVEL | CLAYEY SAND | SILTY CLAY | CLAYEY SILT

DATE DRILLED	PAGE
10-10-99	5 of 7

DRILLING METHOD: ARCH

DRILLED BY: BEYLIK

LOGGED BY: ED KRISTI

EXISTING GRADE ELEVATION (FT. AMSL)

LOCATION OR GRID COORDINATES

SOIL BORING LOG KM-5655-B

KERR-McGEE CORPORATION Hydrology Dept. - S&EA Division	KM SUBSIDIARY KMC LLC	LOCATION HENDERSON, NV	BORING NUMBER TR-11

DEPTH IN FEET	LITHOLOGIC DESCRIPTION	GRAPHIC LOG	UNIFIED SOIL FIELD CLASS.	BLOWS PER 6"	PID (ppm)	SOIL SAMPLE NO.	TYPE	DEPTH	REC.	REMARKS OR FIELD OBSERVATIONS
			SM							
205	205-208 SAND, silty brn, 20-30% silt		SM							
210	208-230 SAND, gravelly, brn. Hard, abu caliche cement vf-mg interbedded w/ vf-vc + granules.									
215	208-216 sdy gravel vf-vc + granules (volc)		SW-SP							
220	216-225 vf-mg									
225	225-230 sdy gravel vf-vc + granules (volc)									
230	230-235 SILT, sdy brn + gryoran (10YR 6/4) 10-20% vfg sd. Com sd-size caliche nodules		ML							
235	235-252 SAND, slty gryoran (10YR 6/4). Com caliche cement, vf-c w/ minor vc + granules		SM							

EXPLANATION

- ▼ Water Table (24 Hour)
- ▽ Water Table (Time of Boring)
- PID Photoionization Detection (ppm)
- NO. Identifies Sample by Number
- TYPE Sample Collection Method

SPLIT-BARREL; AUGER; ROCK CORE; THIN-WALLED TUBE; CONTINUOUS SAMPLER; NO RECOVERY

DEPTH Depth Top and Bottom of Sample
REC. Actual Length of Recovered Sample in Feet

GRAPHIC LOG LEGEND

CLAY; DEBRIS FILL; SILT; HIGHLY ORGANIC (PEAT); SAND; SANDY CLAY; GRAVEL; CLAYEY SAND; SILTY CLAY; CLAYEY SILT

DATE DRILLED	PAGE
10-10-99	6 of 7

DRILLING METHOD: ARCH

DRILLED BY: BEYLIK

LOGGED BY: ED KRISH

EXISTING GRADE ELEVATION (FT. AMSL)

LOCATION OR GRID COORDINATES

SOIL BORING LOG KM-5655-B

KERR-McGEE CORPORATION Hydrology Dept. - S&EA Division	KM SUBSIDIARY KMC LLC	LOCATION HENDERSON, NV	BORING NUMBER TR11

DEPTH IN FEET	LITHOLOGIC DESCRIPTION	GRAPHIC LOG	UNIFIED SOIL FIELD CLASS.	BLOWS PER 6"	PID (ppm)	SOIL SAMPLE NO.	TYPE	DEPTH	REC.	REMARKS OR FIELD OBSERVATIONS
	10-20% volc granules									
	Fractured									
245			SM							
250										
	TD 252'									

EXPLANATION

- ▼ Water Table (24 Hour)
- ▽ Water Table (Time of Boring)
- PID Photoionization Detection (ppm)
- NO. Identifies Sample by Number
- TYPE Sample Collection Method

SPLIT-BARREL · AUGER · ROCK CORE · THIN-WALLED TUBE · CONTINUOUS SAMPLER · NO RECOVERY

DEPTH Depth Top and Bottom of Sample
REC. Actual Length of Recovered Sample in Feet

GRAPHIC LOG LEGEND

CLAY · SILT · SAND · GRAVEL · SILTY CLAY · CLAYEY SILT · DEBRIS FILL · HIGHLY ORGANIC (PEAT) · SANDY CLAY · CLAYEY SAND

DATE DRILLED	PAGE
10-10-99	7 of 7

DRILLING METHOD: ARCH

DRILLED BY: BEYLIK

LOGGED BY: ED KRISH

EXISTING GRADE ELEVATION (FT. AMSL)

LOCATION OR GRID COORDINATES

KERR-McGEE CORPORATION
HYDROLOGY DEPARTMENT
MONITORING WELL INSTALLATION DIAGRAM

Protective Pipe
Yes ☒ No ☐
Steel ☒ PVC ☐
Surveying Pin ? Yes ☐ No ☒

Casing Cap Vent ? Yes ☐ No ☐
Lock ? Yes ☐ No ☐
Weep Hole ? Yes ☐ No ☐
Concrete Pad _____ Ft. x _____ Ft. x _____ Inches

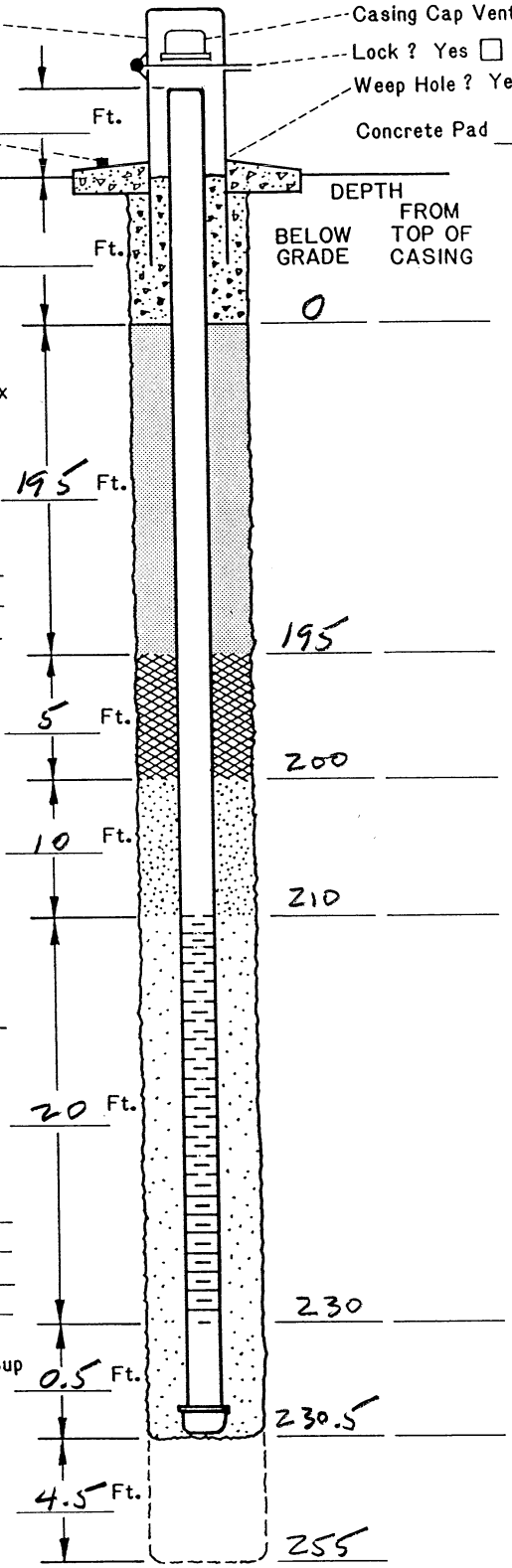

DRILLING INFORMATION:

1. Borehole Diameter= 9 5/8 Inches.
2. Were Drilling Additives Used ? Yes ☐ No ☒
   Revert ☐ Bentonite ☐ Water ☐
   Solid Auger ☐ Hollow Stem Auger ☐
3. Was Outer Steel Casing Used ? Yes ☐ No ☒
   Depth= _____ to _____ Feet.
4. Borehole Diameter for Outer Casing _____ Inches.

WELL CONSTRUCTION INFORMATION:

1. Type of Casing: PVC ☒ Galvanized ☐ Teflon ☐
   Stainless ☐ Other _____
2. Type of Casing Joints: Screw-Couple ☒ Glue-Couple ☐ Other _____
3. Type of Well Screen: PVC ☒ Galvanized ☐
   Stainless ☐ Teflon ☐ Other _____
4. Diameter of Casing and Well Screen:
   Casing 4" Inches, Screen 4" Inches.
5. Slot Size of Screen: 0.02
6. Type of Screen Perforation: Factory Slotted ☒
   Hacksaw ☐ Drilled ☐ Other _____
7. Installed Protector Pipe w/Lock: Yes ☒ No ☐

WELL DEVELOPMENT INFORMATION:

1. How was Well Developed ? Bailing ☐ Pumping ☒
   Air Surging (Air or Nitrogen) ☐ Other _____
2. Time Spent on Well Development ?
   60 / _____ Minutes/~~Hours~~
3. Approximate Water Volume Removed ? 420 Gallons
4. Water Clarity Before Development ? Clear ☒
   Turbid ☐ Opaque ☐
5. Water Clarity After Development ? Clear ☒
   Turbid ☐ Opaque ☐
6. Did Water have Odor ? Yes ☐ No ☒
   If Yes, Describe _____
7. Did Water have any Color ? Yes ☐ No ☒
   If Yes, Describe _____

WATER LEVEL INFORMATION:

Water Level Summary (From ~~Top of Casing~~) ng

During Drilling _____ Ft. Date _____
Before Development +3.9 Ft. Date 10-12-99
After Development +6.05 Ft. Date 1-13-00

Driller/Firm BEYLIK/SCHOONMAKER Drill Rig Type DTW 70 Date Installed 10-11-99
Drill Crew EBERLY/PADILLA Well No. TR 11 Kerr-McGee Hydrologist Ed Krish

SOIL BORING LOG KM-5655-B

KERR-McGEE CORPORATION Hydrology Dept. - S&EA Division	KM SUBSIDIARY KMC LLC	LOCATION HENDERSON	BORING NUMBER TR-12

DEPTH IN FEET	LITHOLOGIC DESCRIPTION	GRAPHIC LOG	UNIFIED SOIL FIELD CLASS.	BLOWS PER 6"	PID (ppm)	SOIL SAMPLE NO.	TYPE	DEPTH	REC.	REMARKS OR FIELD OBSERVATIONS
5	0-5 GRAVEL w/silty sd in matrix. Com caliche coatings. Sized up to 2", volcanics		GM							
10	5-10 SAND, silty w/ mod cobble-size volc gravel. Com caliche coatings. Sd vf-vc, A-SR		SW							
15 19	10-19 Gravel, boulders, w/com. caliche coatings. Mod vf-vc silty sand matrix dk yell brn (10YR 2/2) and gry oran (10YR 7/4)		GW							
21	19-21 SAND, silty w/mod pea gravel, volc.		SW							
27	21-27 Gravel, boulders w/ mod silty sd matrix. dk yell brn + gry oran. Sd vf-vc. Mod cemented com caliche coatings		GW							
30 36	27-36 GRAVEL, up to boulder size w/ minor vf-vc sd matrix. HARD well cemented w/ caliche		GP							
38	36-38 SAND, HARD, well cemented (caliche), vf-vc		SP							
39	38-39 SAND + GRAVEL, as above, uncemented		GW SP							

EXPLANATION

- ▼ Water Table (24 Hour)
- ▽ Water Table (Time of Boring)
- PID Photoionization Detection (ppm)
- NO. Identifies Sample by Number
- TYPE Sample Collection Method

SPLIT-BARREL | AUGER | ROCK CORE | THIN-WALLED TUBE | CONTINUOUS SAMPLER | NO RECOVERY

DEPTH Depth Top and Bottom of Sample
REC. Actual Length of Recovered Sample in Feet

GRAPHIC LOG LEGEND

CLAY | DEBRIS FILL | SILT | HIGHLY ORGANIC (PEAT) | SAND | SANDY CLAY | GRAVEL | CLAYEY SAND | SILTY CLAY | CLAYEY SILT

DATE DRILLED	PAGE
10-16-99	1 of 8

DRILLING METHOD: ARCH

DRILLED BY: BEYLIK

LOGGED BY: Ed Krish

EXISTING GRADE ELEVATION (FT AMSL)

LOCATION OR GRID COORDINATES

SOIL BORING LOG KM-5655-B

KERR-McGEE CORPORATION Hydrology Dept. - S&EA Division	KM SUBSIDIARY KMC LLC	LOCATION HENDERSON	BORING NUMBER TR-12

DEPTH IN FEET	LITHOLOGIC DESCRIPTION	GRAPHIC LOG	UNIFIED SOIL FIELD CLASS.	BLOWS PER 6"	PID (ppm)	SOIL SAMPLE NO.	TYPE	DEPTH	REC.	REMARKS OR FIELD OBSERVATIONS
43	39-43 SAND w/ minor pea gravel. Well cemented HARD. vf-vc, A-SR, vols		SP							Qal
50	43-50' SILT and cly SILT, interbedded. Mod gry oran (10YR 6/4). Contains scattered sd + granule size caliche nodules		ML							MC fg
55	50-64 SILT, cly w/ thin (1/4'-1/2') interbeds of vole pea gravel. gry oran (10YR 7/4)		ML-CL							▽ first WTR
60										
64	64-66 GRAVEL, w/ minor sd (m-vc) matrix. Size up to 1" diam. Dusky yell brn (10YR 2/2)		GP							
66	64-70 SILT, cly and sdy, w/ minor caliche nodules gry orange		ML							
70	70-75 SILT, sdy. 20-25% vf-fg. w/ minor caliche nodules. W/ v. minor (5%) c-vc vole grains dissem		ML							
75	75-80 SAND, gravelly, f-vc + minor granules, A-SA. dusky yell brn (10YR 2/2). Minor caliche. Minor silty sd 77'-80'		SP							

EXPLANATION

- ▼ Water Table (24 Hour)
- ▽ Water Table (Time of Boring)
- PID Photoionization Detection (ppm)
- NO. Identifies Sample by Number
- TYPE Sample Collection Method

SPLIT-BARREL; AUGER; ROCK CORE; THIN-WALLED TUBE; CONTINUOUS SAMPLER; NO RECOVERY

DEPTH Depth Top and Bottom of Sample
REC. Actual Length of Recovered Sample in Feet

GRAPHIC LOG LEGEND

CLAY; DEBRIS FILL; SILT; HIGHLY ORGANIC (PEAT); SAND; SANDY CLAY; GRAVEL; CLAYEY SAND; SILTY CLAY; CLAYEY SILT

DATE DRILLED	PAGE
10-16-99	2 of 8

DRILLING METHOD: ARCH

DRILLED BY: BEYLIK

LOGGED BY: ED KRISIT

EXISTING GRADE ELEVATION (FT AMSL)

LOCATION OR GRID COORDINATES

SOIL BORING LOG KM-5655-B

KERR-McGEE CORPORATION Hydrology Dept. - S&EA Division	KM SUBSIDIARY KMC LLC	LOCATION HENDERSON, NV	BORING NUMBER TR 12

DEPTH IN FEET	LITHOLOGIC DESCRIPTION	GRAPHIC LOG	UNIFIED SOIL FIELD CLASS.	BLOWS PER 6"	PID (ppm)	SOIL SAMPLE NO.	TYPE	DEPTH	REC.	REMARKS OR FIELD OBSERVATIONS
	80-86' SAND, silty, vf-fg w/ com vc-granules-size caliche nodules gry oran (10YR7/4)		SM							
86	86-91 SILT w/ v. minor scattered granule-sized volc grains, w/ minor caliche nodules		ML							
91	91-97 SILT, cly, mod gry yell green (5GY 6/2), w/ com white c-vc sd-sized caliche streaks and nodules.		ML							
97	97-106 CLAY, silty. brn (5YR 5/4) w/ minor gry yell grn interbeds. Com soft granule-sized white caliche nodules.		CL							
100										
106	106-117 SILT, sdy. w/ 20% vf-fg and minor sm caliche nodules		ML							
110										
117	117-119 Tuff, hnbd xtal, salt + pepper texture. Blk hnbd + v. lt gry ash matrix		VOLC CL ML							
119										

EXPLANATION

- ▼ Water Table (24 Hour)
- ▽ Water Table (Time of Boring)
- PID Photoionization Detection (ppm)
- NO. Identifies Sample by Number
- TYPE Sample Collection Method

SPLIT-BARREL | AUGER | ROCK CORE | THIN-WALLED TUBE | CONTINUOUS SAMPLER | NO RECOVERY

- DEPTH Depth Top and Bottom of Sample
- REC. Actual Length of Recovered Sample in Feet

GRAPHIC LOG LEGEND

CLAY | DEBRIS FILL | SILT | HIGHLY ORGANIC (PEAT) | SAND | SANDY CLAY | GRAVEL | CLAYEY SAND | SILTY CLAY | CLAYEY SILT

DATE DRILLED	PAGE
10-16-99	3 of 4

DRILLING METHOD: ARCH

DRILLED BY: BEYLIK

LOGGED BY: Ed KRISH

EXISTING GRADE ELEVATION (FT AMSL)

LOCATION OR GRID COORDINATES

SOIL BORING LOG KM-5655-B

KERR-McGEE CORPORATION Hydrology Dept. - S&EA Division	KM SUBSIDIARY KMC LLC	LOCATION HENDERSON	BORING NUMBER TR 12

DEPTH IN FEET	LITHOLOGIC DESCRIPTION	GRAPHIC LOG	UNIFIED SOIL FIELD CLASS.	BLOWS PER 6"	PID (ppm)	SOIL SAMPLE NO.	TYPE	DEPTH	REC.	REMARKS OR FIELD OBSERVATIONS
120	119-131 SILT, cly. brn (5YR 5/4). Sp soft caliche nodules. Tr. volc grains c-vcg		ML							
131	131-170 SILT, sdy and scattered thin beds and disseminations of vc sd-granule-sized volc grains. Also contains varying amts of soft caliche nodules. brn (5YR 5/4)									
135										
140	131-136 mod-com caliche nodules w/ tr-sp volc vcg+granules		ML							
145	141-152 mod. pea size caliche nodules									
150										
155										

EXPLANATION

- ▼ Water Table (24 Hour)
- ▽ Water Table (Time of Boring)
- PID Photoionization Detection (ppm)
- NO. Identifies Sample by Number
- TYPE Sample Collection Method

SPLIT-BARREL · AUGER · ROCK CORE · THIN-WALLED TUBE · CONTINUOUS SAMPLER · NO RECOVERY

DEPTH Depth Top and Bottom of Sample
REC. Actual Length of Recovered Sample in Feet

GRAPHIC LOG LEGEND

CLAY · SILT · SAND · GRAVEL · SILTY CLAY · CLAYEY SILT · DEBRIS FILL · HIGHLY ORGANIC (PEAT) · SANDY CLAY · CLAYEY SAND

DATE DRILLED	PAGE
10-16-99	4 of 8

DRILLING METHOD: ARCH

DRILLED BY: BEYLIK

LOGGED BY: Ed Krish

EXISTING GRADE ELEVATION (FT AMSL)

LOCATION OR GRID COORDINATES

SOIL BORING LOG KM-5655-B

KERR-McGEE CORPORATION Hydrology Dept. - S&EA Division	KM SUBSIDIARY	LOCATION	BORING NUMBER TR 12

DEPTH IN FEET	LITHOLOGIC DESCRIPTION	GRAPHIC LOG	UNIFIED SOIL FIELD CLASS.	BLOWS PER 6"	PID (ppm)	SOIL SAMPLE NO.	TYPE	DEPTH	REC.	REMARKS OR FIELD OBSERVATIONS
165	162-165 mod caliche nodules and tr volc granules (dissem in silt matrix)		ML							MC fg
170	170-202 SAND, com silty brn (5YR 5/4), vf-fg, A-SA. Contains mod granule-sized caliche nodules		SM							MC cg
175										
180	180-180.5 HARD well cemented caliche layer									
185										
190										
195										

EXPLANATION

- ▼ Water Table (24 Hour)
- ▽ Water Table (Time of Boring)
- PID Photoionization Detection (ppm)
- NO. Identifies Sample by Number
- TYPE Sample Collection Method

SPLIT-BARREL | AUGER | ROCK CORE | THIN-WALLED TUBE | CONTINUOUS SAMPLER | NO RECOVERY

DEPTH Depth Top and Bottom of Sample
REC. Actual Length of Recovered Sample in Feet

GRAPHIC LOG LEGEND

CLAY | DEBRIS FILL | SILT | HIGHLY ORGANIC (PEAT) | SAND | SANDY CLAY | GRAVEL | CLAYEY SAND | SILTY CLAY | CLAYEY SILT

DATE DRILLED 10-16-99 | PAGE 5 of 8

DRILLING METHOD

DRILLED BY

LOGGED BY

EXISTING GRADE ELEVATION (FT AMSL)

LOCATION OR GRID COORDINATES

SOIL BORING LOG KM-5655-B

KERR-McGEE CORPORATION Hydrology Dept. - S&EA Division	KM SUBSIDIARY KMC LLC	LOCATION HENDERSON NV	BORING NUMBER TR12

DEPTH IN FEET	LITHOLOGIC DESCRIPTION	GRAPHIC LOG	UNIFIED SOIL FIELD CLASS.	BLOWS PER 6"	PID (ppm)	SOIL SAMPLE NO.	TYPE	DEPTH	REC.	REMARKS OR FIELD OBSERVATIONS
202			SM							
205 210 215	202-219 SAND, sp. silty. Brn (5YR 5/4). vf-mg. 202-204 vf-f w/ com m-vc. 218.5-219 com vc+granules		SP							mc cg
219 225	219-229 CLAY. silty gry orange (10YR 7/4) w/ sp. (10-15%) sm soft caliche nodules		CL							mc fg(?)
229	229-236 SAND, vf-m, brn. interbedded w/ thin volc GRAVEL beds, granule size		SW							
236	236-241 CLAY, brn, w/ thin interbeds of volc GRAVEL, granule-size.		CL							

EXPLANATION

- ▼ Water Table (24 Hour)
- ▽ Water Table (Time of Boring)
- PID Photoionization Detection (ppm)
- NO. Identifies Sample by Number
- TYPE Sample Collection Method

SPLIT-BARREL · AUGER · ROCK CORE · THIN-WALLED TUBE · CONTINUOUS SAMPLER · NO RECOVERY

- DEPTH Depth Top and Bottom of Sample
- REC. Actual Length of Recovered Sample in Feet

GRAPHIC LOG LEGEND

CLAY · DEBRIS FILL · SILT · HIGHLY ORGANIC (PEAT) · SAND · SANDY CLAY · GRAVEL · CLAYEY SAND · SILTY CLAY · CLAYEY SILT

DATE DRILLED	PAGE
10-16-99	6 of 8

DRILLING METHOD: ARCH

DRILLED BY: BEYLIK

LOGGED BY: ED KRISH

EXISTING GRADE ELEVATION (FT AMSL)

LOCATION OR GRID COORDINATES

SOIL BORING LOG KM-5655-B

KERR-McGEE CORPORATION Hydrology Dept. - S&EA Division	KM SUBSIDIARY KMC LLC	LOCATION HENDERSON	BORING NUMBER TR 12

DEPTH IN FEET	LITHOLOGIC DESCRIPTION	GRAPHIC LOG	UNIFIED SOIL FIELD CLASS.	BLOWS PER 6"	PID (ppm)	SOIL SAMPLE NO.	TYPE	DEPTH	REC.	REMARKS OR FIELD OBSERVATIONS
241	w/mod sm soft white caliche nodules (dissem)		CL							
	241-245 CLAY, silty brn, tr caliche nodules		CL							
245	245-247 SILT, brn		ML							
247	247-271 CLAY and silty CLAY interbedded. gry orange (10YR 7/4) tr sm soft caliche nodules		CL							
250										
255										
260										
265										
271	271-273 SILT, cly (ash?), gry		ML							
273	273-293 SAND, vf-f w/minor m-c gr, A-SA, mod brn (5YR 4/2). Com carb. cemented, fractured		SP							

EXPLANATION

- ▼ Water Table (24 Hour)
- ▽ Water Table (Time of Boring)
- PID Photoionization Detection (ppm)
- NO. Identifies Sample by Number
- TYPE Sample Collection Method

SPLIT-BARREL; AUGER; ROCK CORE; THIN-WALLED TUBE; CONTINUOUS SAMPLER; NO RECOVERY

- DEPTH Depth Top and Bottom of Sample
- REC. Actual Length of Recovered Sample in Feet

GRAPHIC LOG LEGEND

CLAY; SILT; SAND; GRAVEL; SILTY CLAY; CLAYEY SILT; DEBRIS FILL; HIGHLY ORGANIC (PEAT); SANDY CLAY; CLAYEY SAND; _____; _____

DATE DRILLED	PAGE
10-16-99	7 of 8

DRILLING METHOD: ARCH

DRILLED BY: BEYLIK

LOGGED BY: ED KRISH

EXISTING GRADE ELEVATION (FT AMSL):

LOCATION OR GRID COORDINATES:

SOIL BORING LOG KM-5655-B

KERR-McGEE CORPORATION Hydrology Dept. - S&EA Division	KM SUBSIDIARY KMC LLC	LOCATION HENDERSON, NV	BORING NUMBER TR 12

DEPTH IN FEET	LITHOLOGIC DESCRIPTION	GRAPHIC LOG	UNIFIED SOIL FIELD CLASS.	BLOWS PER 6"	PID (ppm)	SOIL SAMPLE NO.	TYPE	DEPTH	REC.	REMARKS OR FIELD OBSERVATIONS
285			SP							
290										
293	TD 293'									

EXPLANATION

- Water Table (24 Hour)
- Water Table (Time of Boring)
- PID Photoionization Detection (ppm)
- NO. Identifies Sample by Number
- TYPE Sample Collection Method

SPLIT-BARREL; AUGER; ROCK CORE; THIN-WALLED TUBE; CONTINUOUS SAMPLER; NO RECOVERY

DEPTH Depth Top and Bottom of Sample
REC. Actual Length of Recovered Sample in Feet

GRAPHIC LOG LEGEND

CLAY; SILT; SAND; GRAVEL; SILTY CLAY; CLAYEY SILT; DEBRIS FILL; HIGHLY ORGANIC (PEAT); SANDY CLAY; CLAYEY SAND; _____; _____

DATE DRILLED	PAGE
10-16-99	8 of 8

DRILLING METHOD: ARCH

DRILLED BY: BEYLIK

LOGGED BY: ED KRISH

EXISTING GRADE ELEVATION (FT AMSL):

LOCATION OR GRID COORDINATES:

KERR-McGEE CORPORATION
HYDROLOGY DEPARTMENT
MONITORING WELL INSTALLATION DIAGRAM

Protective Pipe
Yes ☒ No ☐
Steel ☒ PVC ☐
Surveying Pin ?
Yes ☐ No ☒

Casing Cap Vent ? Yes ☐ No ☐
Lock ? Yes ☐ No ☐
Weep Hole ? Yes ☐ No ☐
Concrete Pad _____ Ft. x _____ Ft. x _____ Inches

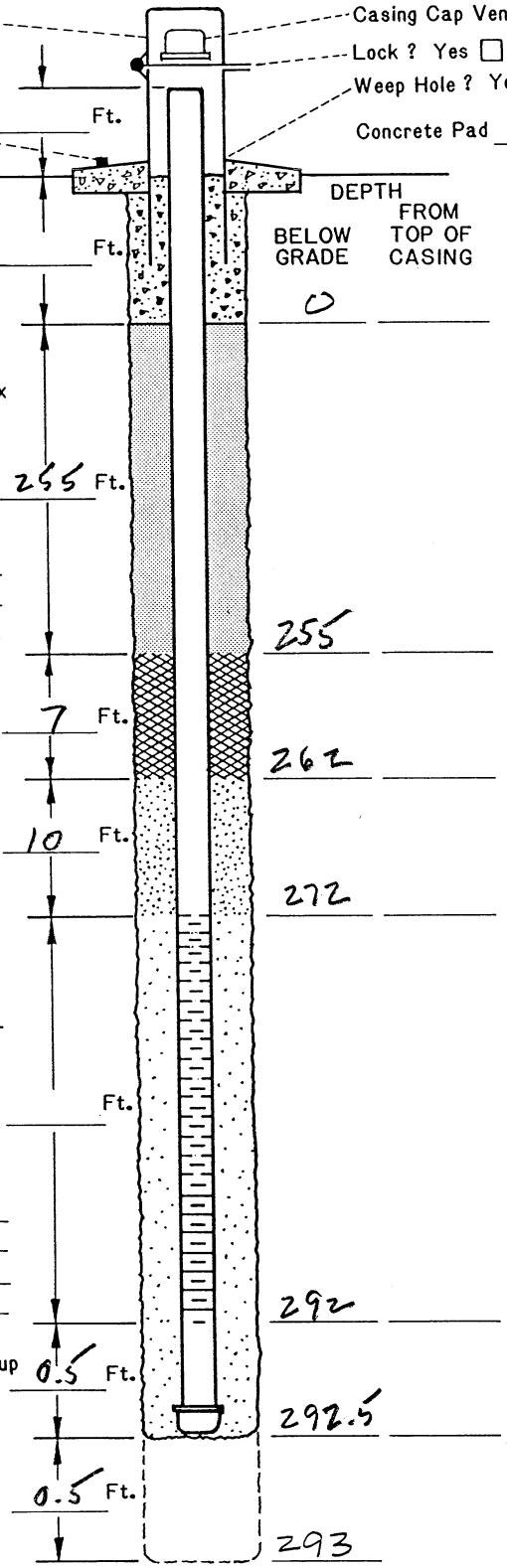

Concrete

Cement/Bentonite Grout Mix
Yes ☒ No ☐
5.5 Gallons Water to 94Lb. Bag Cement & 3-5 Lb. Bentonite Powder
Other: _____

Bentonite Seal
Pellets ☒ Slurry ☐

Filter Pack Above Screen

FILTER PACK MATERIAL
Silica Sand ☒
Washed Sand ☐
Pea Gravel ☐
Other: _____
Sand Size 3 mesh

Dense Phase Sampling Cup
Bottom Plug
Yes ☒ No ☐

Overdrilled Material Backfill
Grout ☐ Sand ☒
Caved Material ☐
Other: _____

DRILLING INFORMATION:

1. Borehole Diameter= 9 5/8 Inches.
2. Were Drilling Additives Used ? Yes ☐ No ☒
   Revert ☐ Bentonite ☐ Water ☐
   Solid Auger ☐ Hollow Stem Auger ☐
3. Was Outer Steel Casing Used ? Yes ☐ No ☒
   Depth= _____ to _____ Feet.
4. Borehole Diameter for Outer Casing _____ Inches.

WELL CONSTRUCTION INFORMATION:

1. Type of Casing: PVC ☒ Galvanized ☐ Teflon ☐
   Stainless ☐ Other _____
2. Type of Casing Joints: Screw-Couple ☒ Glue-Couple ☐ Other _____
3. Type of Well Screen: PVC ☒ Galvanized ☐
   Stainless ☐ Teflon ☐ Other _____
4. Diameter of Casing and Well Screen:
   Casing 4" Inches, Screen 4" Inches.
5. Slot Size of Screen: 0.02
6. Type of Screen Perforation: Factory Slotted ☒
   Hacksaw ☐ Drilled ☐ Other _____
7. Installed Protector Pipe w/Lock: Yes ☒ No ☐

WELL DEVELOPMENT INFORMATION:

1. How was Well Developed ? Bailing ☐ Pumping ☒
   Air Surging (Air or Nitrogen) ☐ Other _____
2. Time Spent on Well Development ?
   60 / _____ Minutes/~~Hours~~
3. Approximate Water Volume Removed ? 60 Gallons
4. Water Clarity Before Development ? Clear ☐
   Turbid ☒ Opaque ☐
5. Water Clarity After Development ? Clear ☒
   Turbid ☐ Opaque ☐
6. Did Water have Odor ? Yes ☐ No ☒
   If Yes, Describe _____
7. Did Water have any Color ? Yes ☐ No ☒
   If Yes, Describe _____

WATER LEVEL INFORMATION:

Water Level Summary (From ~~Top of Casing~~) ng

During Drilling -50 Ft. Date 10-15-99
Before Development +5.1 Ft. Date 10-18-99
After Development +18.2 Ft. Date 1-13-00

Driller/Firm Beylik/Schoonmaker Drill Rig Type DTW 70 Date Installed 10-15-99
Drill Crew Eberly/Padilla Well No. TR 12 Kerr-McGee Hydrologist Ed Krish