K-M CHEMICAL CORPORATION
Henderson, Nevada Facility
Well No. M-1

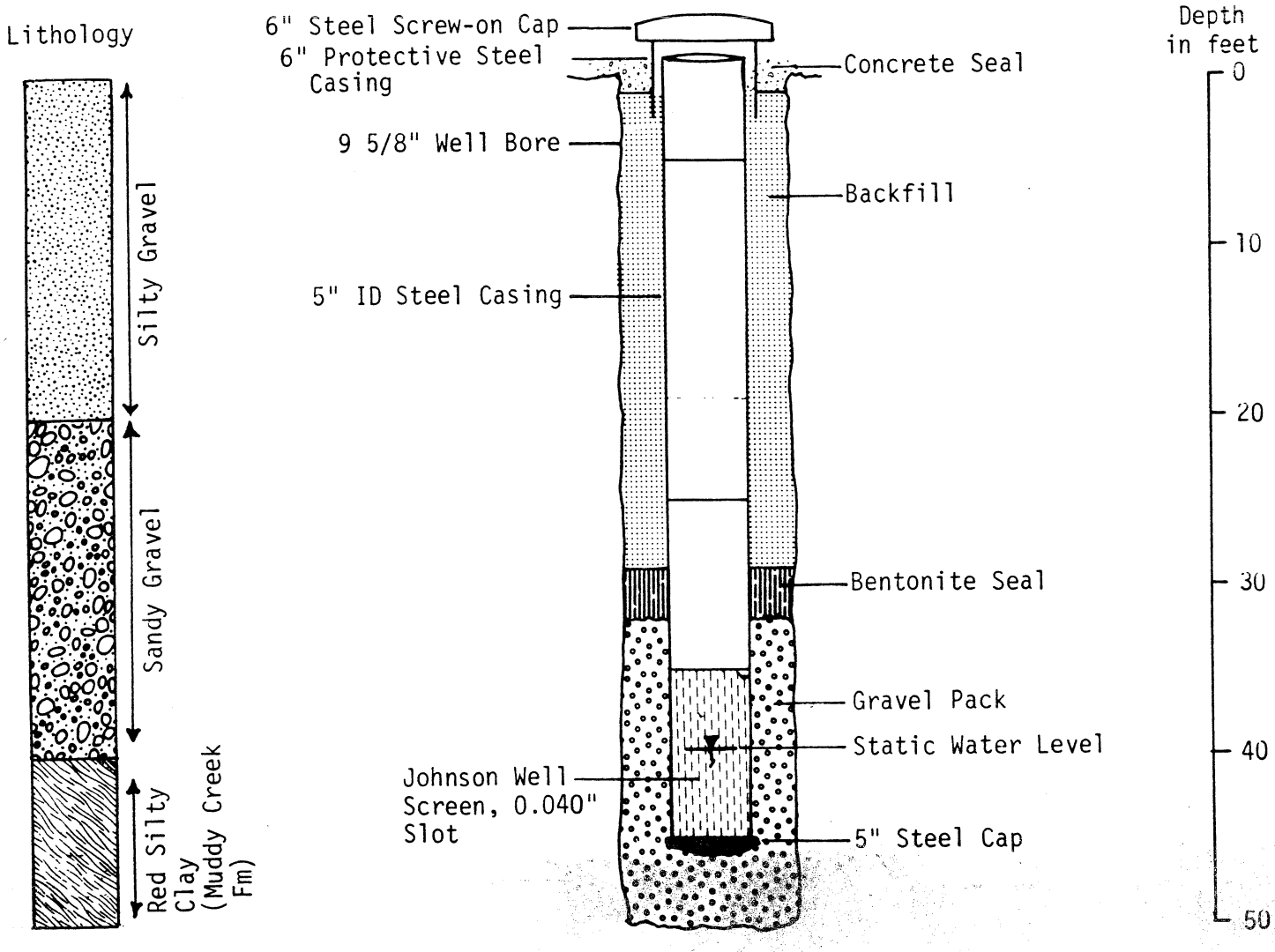

Well Yield: Approximately 1/2 gpm
Water Level on 1-14-82: 41.05' (from protector pipe top)
Casing Elevation: 1792.68' above MSL

Geological and Well Construction Data from Converse Consultants 81-3258, 11-13-81.

K-M CHEMICAL CORPORATION
Henderson, Nevada Facility
Well No. M-2

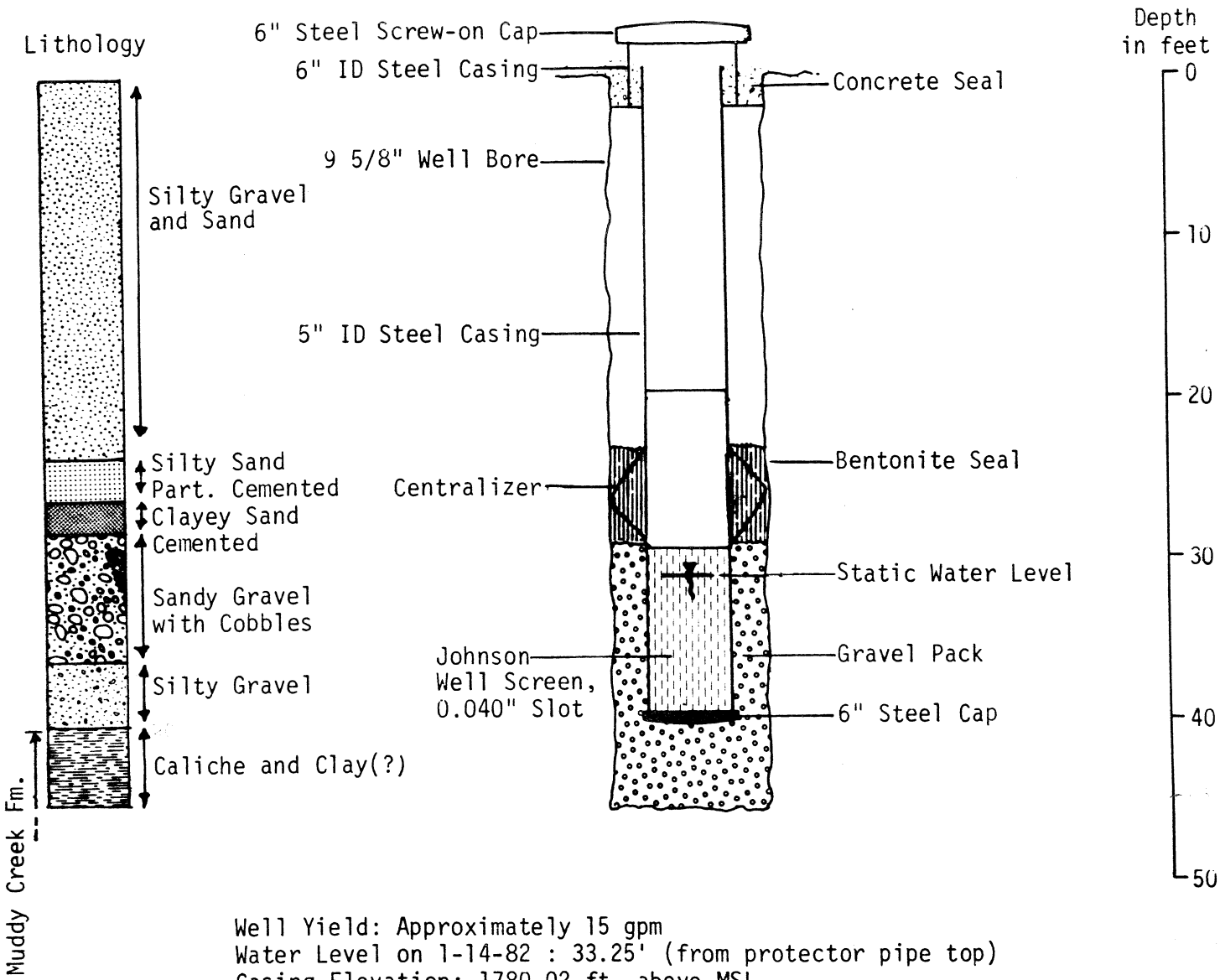

Well Yield: Approximately 15 gpm
Water Level on 1-14-82 : 33.25' (from protector pipe top)
Casing Elevation: 1780.02 ft. above MSL

Geological and Well Construction Data from Converse Consultants 81-3258, 11-13-81.

P-A

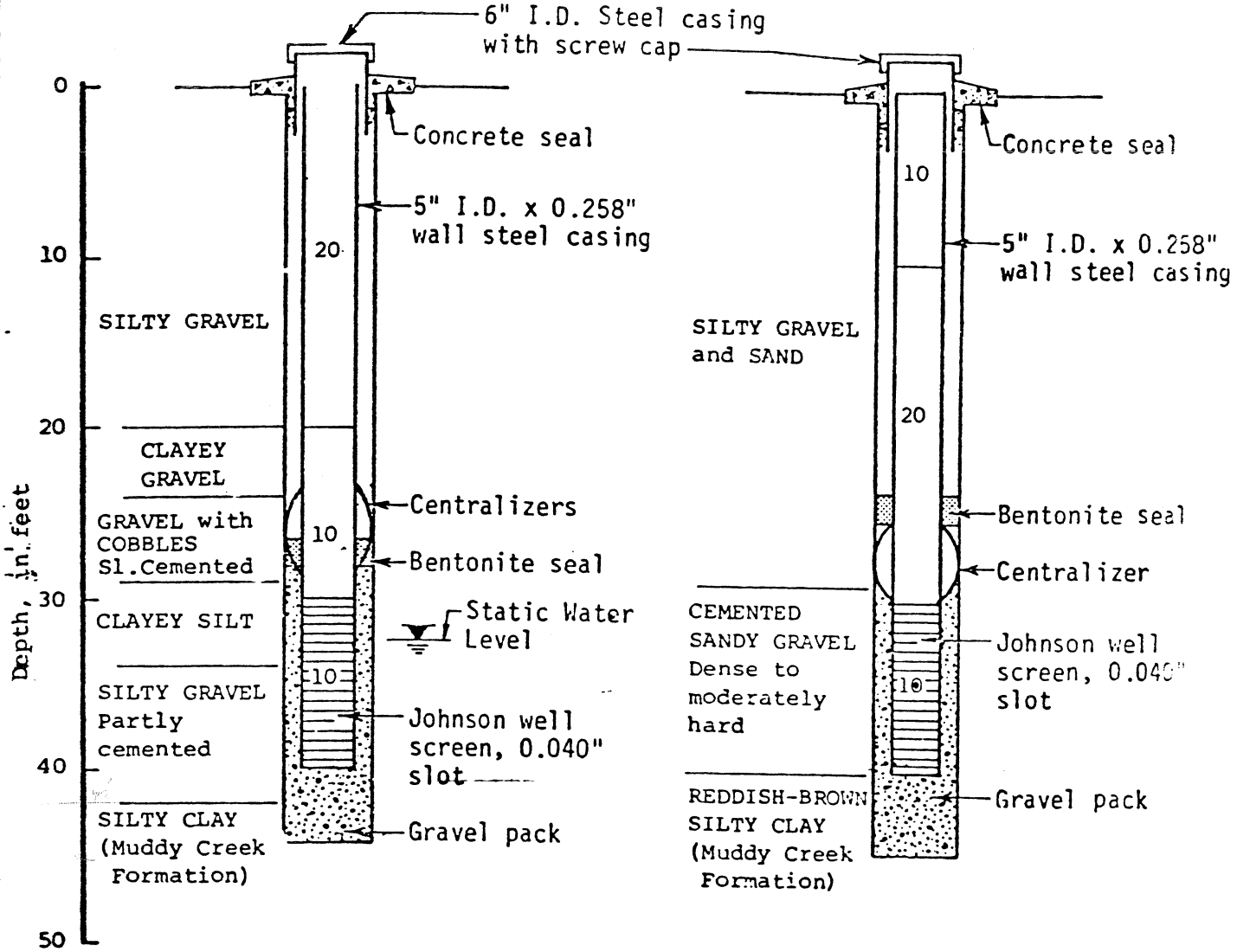

YIELD = PUMP CAPACITY = 15 gpm
WATER YELLOW COLOR

M-3

YIELD = APPROXIMATELY 3 gpm
WATER MURKY TO CLEAR

M-4

Project No.

MONITOR WELLS M-3 AND M-4

Figure No.

ConverseWardDavisDixon Geotechnical Consultants

K-M Chemical Corporation
Henderson, Nevada Facility
Well No. M-5

P&A

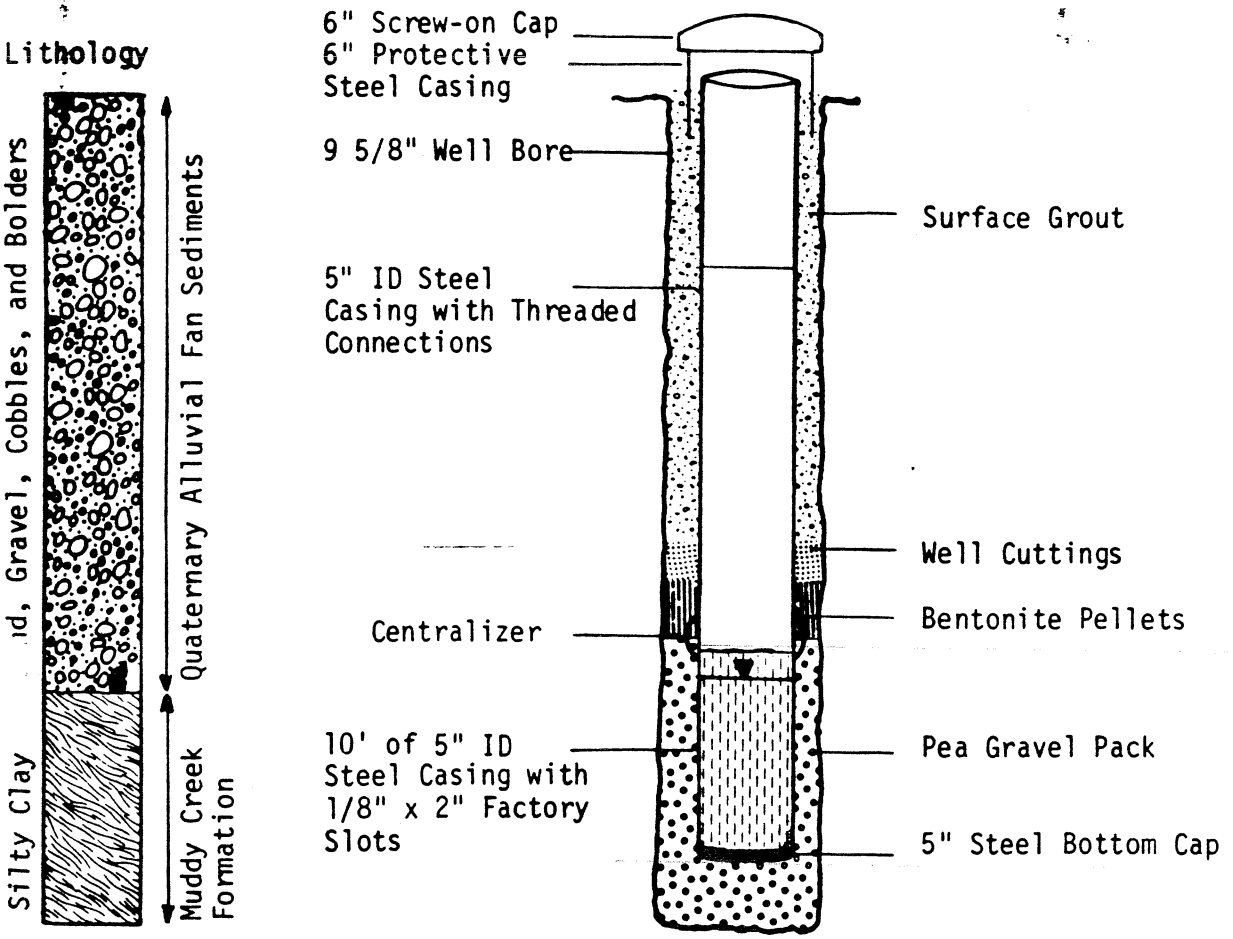

Water Level on 6-16-82

31' 4 3/8"

Measured from Top of Protective Casing

SOIL BORING LOG KM—5655-A

KERR-McGEE CORPORATION Hydrology Dept. Engineering Services	KM SUBSIDIARY CHEMICAL	LOCATION HENDERSON, NV.	BORING NUMBER M-5A

DEPTH IN FEET	LITHOLOGIC DESCRIPTION	GRAPHIC LOG	UNIFIED SOIL FIELD CLASS.	BLOWS PER FOOT	PID (ppm)	SOIL SAMPLE NO.	SOIL SAMPLE TYPE	SOIL SAMPLE DEPTH	SOIL SAMPLE REC.	REMARKS OR FIELD OBSERVATIONS
0	SAND & CLAY									BOREHOLE LOGGED FROM ROTARY CUTTINGS
10										
	SAND & CLAY									
20										
30										
35										
	BROWN CLAY (MUDDY CREEK)									
40										
42			▽							
50										
	TD 50'									

EXPLANATION

- ▼ Water Table (24 Hour)
- ▽ Water Table (Time of Boring)
- PID Photoionization Detection (ppm)
- NO. Identifies Sample by Number
- TYPE Sample Collection Method

SPLIT-BARREL · AUGER · ROCK CORE · THIN-WALLED TUBE · CONTINUOUS SAMPLER · NO RECOVERY

- DEPTH Depth Top and Bottom of Sample
- REC. Actual Length of Recovered Sample in Feet

GRAPHIC LOG LEGEND

CLAY · SILT · SAND · GRAVEL · SILTY CLAY · CLAYEY SILT · DEBRIS FILL · HIGHLY ORGANIC (PEAT) · SANDY CLAY · CLAYEY SAND

DATE DRILLED	8/25/95
PAGE	1 of 1
DRILLING METHOD	ROTARY
DRILLED BY	THOMPSON DRILLING CO.
LOGGED BY	THOMPSON DRILLING CO.
EXISTING GRADE ELEVATION (FT. AMSL)	
LOCATION OR GRID COORDINATES	

KERR-McGEE CORPORATION
HYDROLOGY DEPARTMENT
MONITORING WELL INSTALLATION DIAGRAM

TOC 1749.90

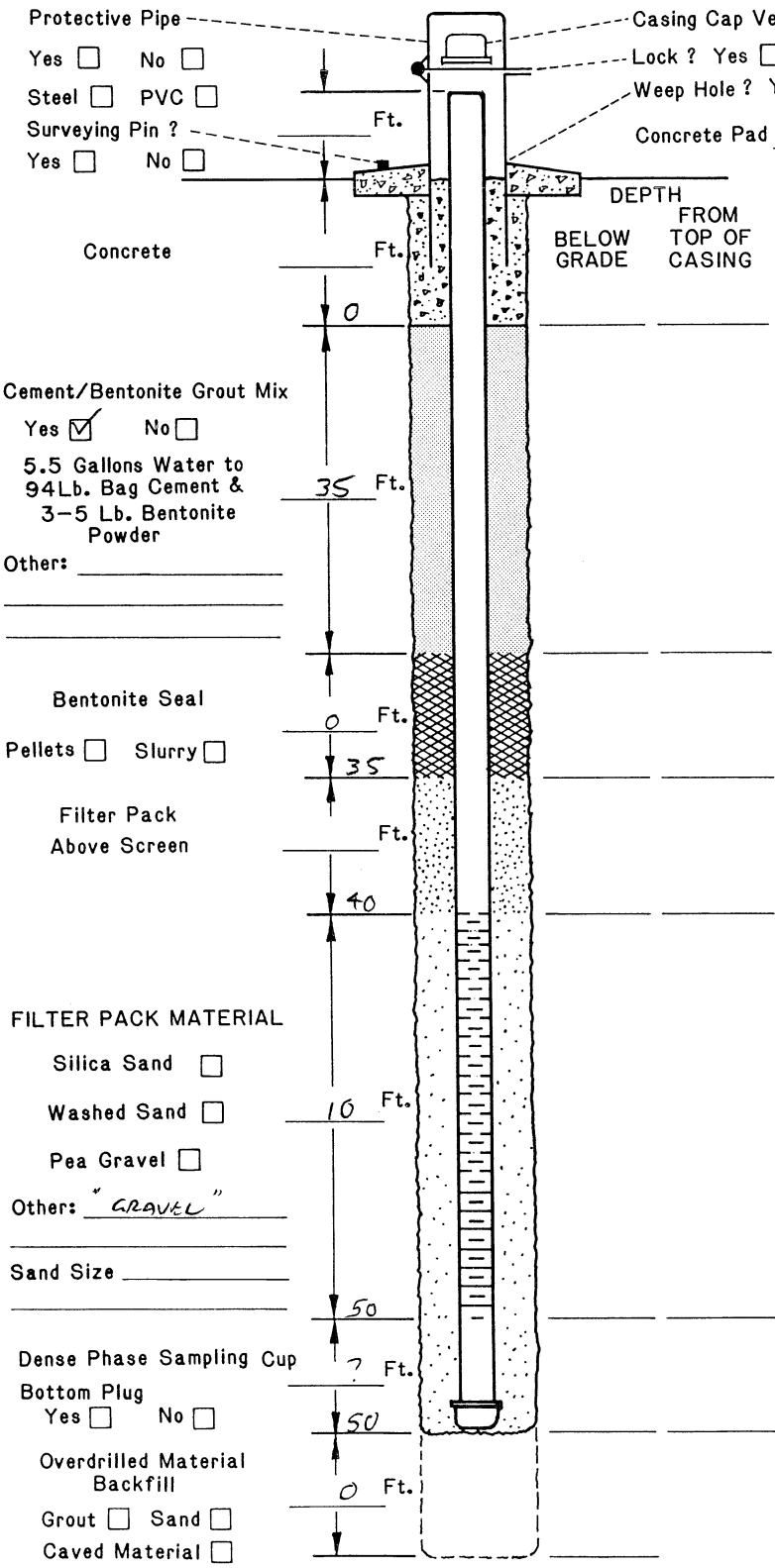

DRILLING INFORMATION:

1. Borehole Diameter= 7-7/8 Inches.
2. Were Drilling Additives Used ? Yes ☐ No ☑
   Revert ☐ Bentonite ☐ Water ☐
   Solid Auger ☐ Hollow Stem Auger ☐
3. Was Outer Steel Casing Used ? Yes ☐ No ☑
   Depth= _____ to _____ Feet.
4. Borehole Diameter for Outer Casing _____ Inches.

WELL CONSTRUCTION INFORMATION:

1. Type of Casing: PVC ☑ Galvanized ☐ Teflon ☐
   Stainless ☐ Other _____
2. Type of Casing Joints: Screw-Couple ☑ Glue-Couple ☐ Other _____
3. Type of Well Screen: PVC ☑ Galvanized ☐
   Stainless ☐ Teflon ☐ Other _____
4. Diameter of Casing and Well Screen:
   Casing 3 Inches, Screen 3 Inches.
5. Slot Size of Screen: 0.020
6. Type of Screen Perforation: Factory Slotted ☑
   Hacksaw ☐ Drilled ☐ Other _____
7. Installed Protector Pipe w/Lock: Yes ☐ No ☐

WELL DEVELOPMENT INFORMATION:

1. How was Well Developed ? Bailing ☐ Pumping ☐
   Air Surging (Air or Nitrogen) ☐ Other _____
2. Time Spent on Well Development ?
   _____/_____ Minutes/Hours
3. Approximate Water Volume Removed ? _____ Gallons
4. Water Clarity Before Development ? Clear ☐
   Turbid ☐ Opaque ☐
5. Water Clarity After Development ? Clear ☐
   Turbid ☐ Opaque ☐
6. Did Water have Odor ? Yes ☐ No ☐
   If Yes, Describe _____
7. Did Water have any Color ? Yes ☐ No ☐
   If Yes , Describe _____

WATER LEVEL INFORMATION:

Water Level Summary (From Top of Casing)

During Drilling _____ Ft. Date _____
Before Development 42 Ft. Date 8/28/95
After Development _____ Ft. Date _____

Driller/Firm THOMPSON DRILLING CO. Drill Rig Type – Date Installed 8/28/95
Drill Crew THOMPSON DRILLING CO. Well No. M-5A Kerr-McGee Hydrologist –

WELL CONSTRUCTION DIAGRAM
WELL M-6A
HENDERSON, NV

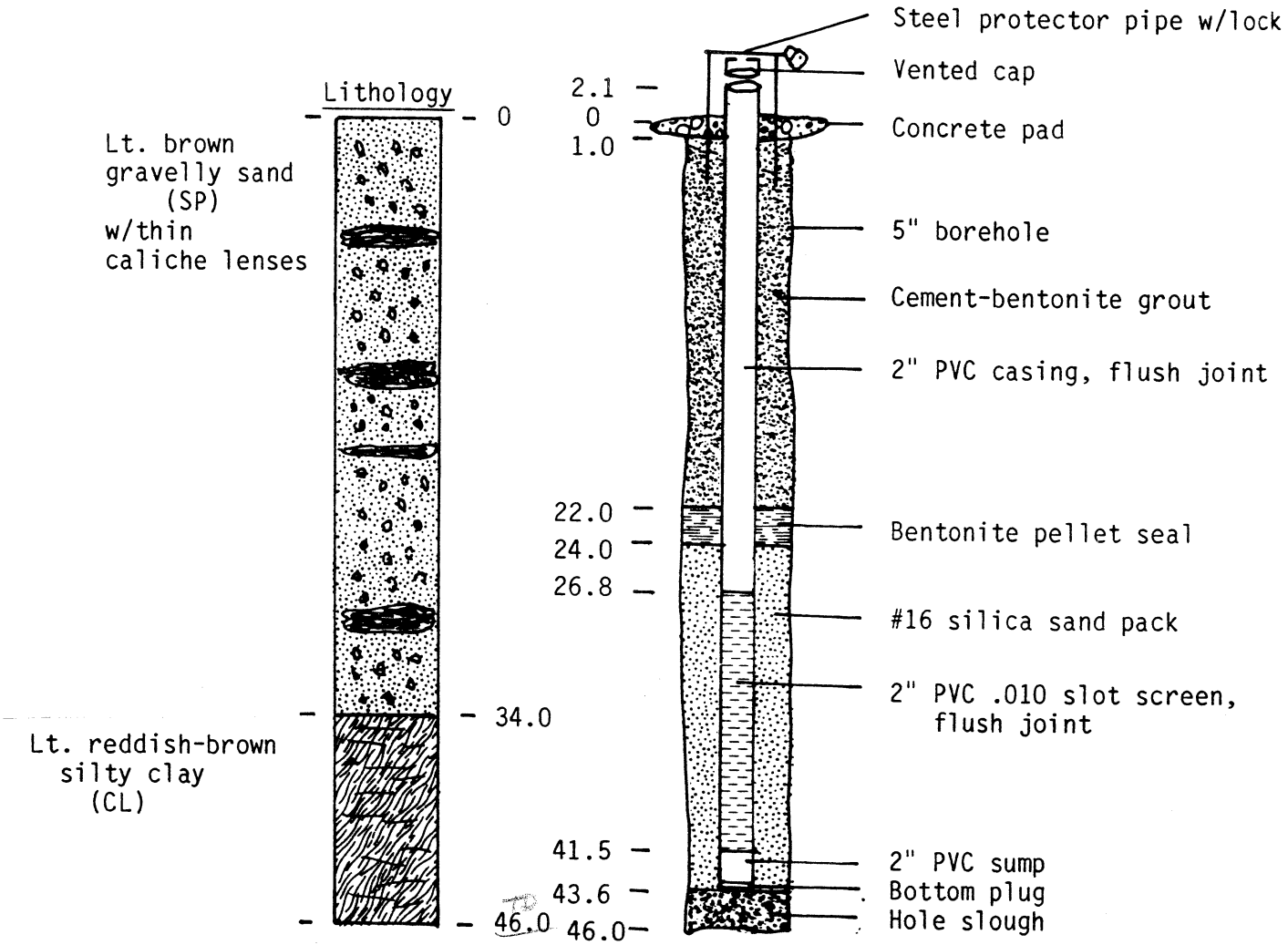

Date Drilled: 12-18-86
Drilled By: Mooney Drilling
Drilling Method: Rotary Wash
Logged By: W. M. Goodman, KM

WELL CONSTRUCTION DIAGRAM
WELL M-7A
HENDERSON, NV

P-A

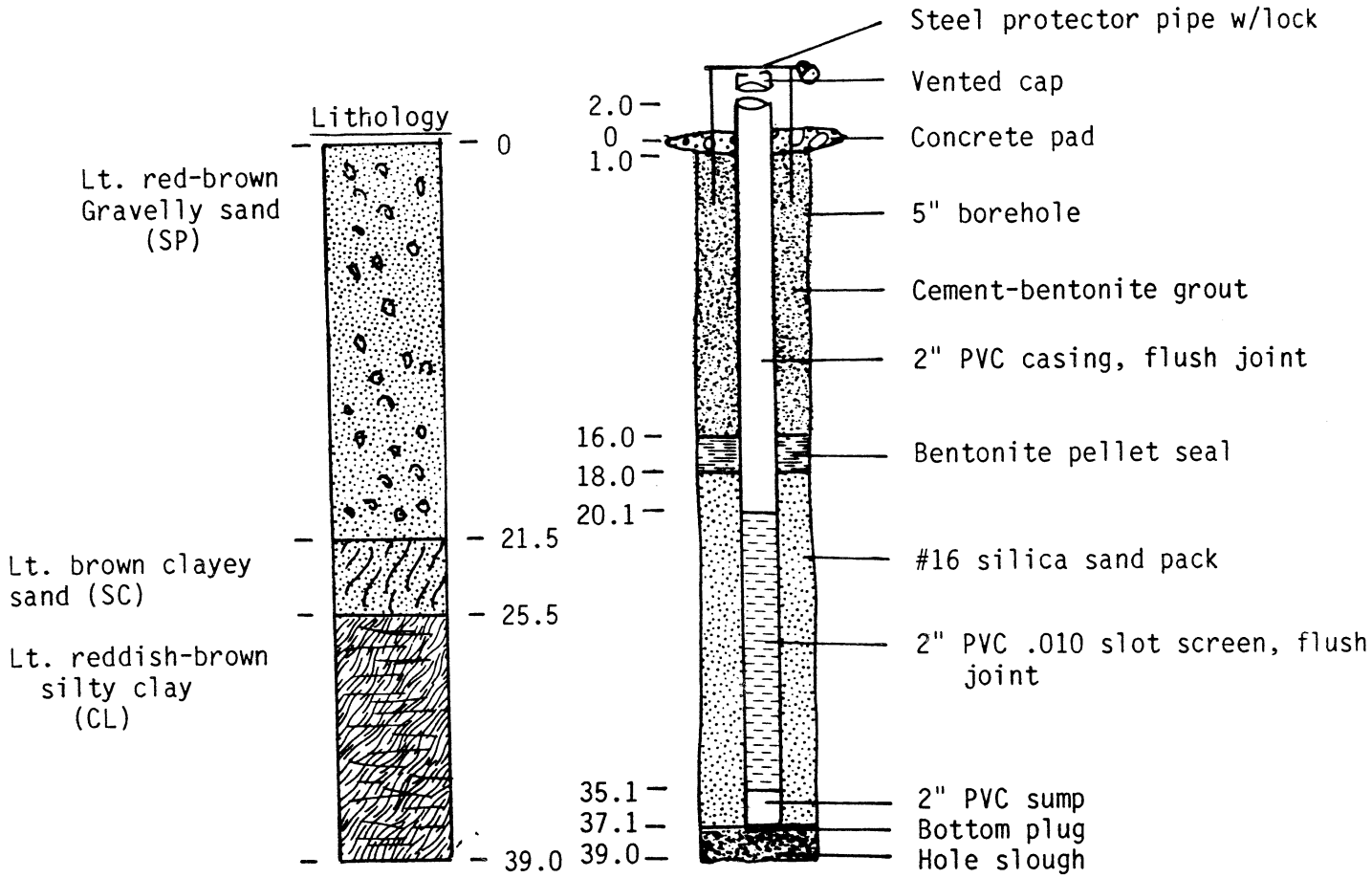

Date Drilled: 12-18-86
Drilled By: Mooney Drilling
Drilling Method: Rotory Wash, Bentonite
Logged By: W. M. Goodman, KM

SOIL BORING LOG KM—5655-A

KERR-McGEE CORPORATION Hydrology Dept. Engineering Services	KM SUBSIDIARY Chemical	LOCATION Henderson, NV	BORING NUMBER KM-15

DEPTH IN FEET	LITHOLOGIC DESCRIPTION	GRAPHIC LOG	UNIFIED SOIL FIELD CLASS.	BLOWS PER FOOT	PID (ppm)	SOIL SAMPLE NO.	SOIL SAMPLE TYPE	SOIL SAMPLE DEPTH	SOIL SAMPLE REC.	REMARKS OR FIELD OBSERVATIONS
5	Tan to reddish brown silty fine sand with variable small to medium gravel in thin layers Alluvial Sequence		GM				X	30-31	1'	0905
10							X	33-34.5	1.5'	0915
15										
20										
25	Sequence of caliche and gray coarse sand		SP							
30	Hard red silty clay		CL							
35	Reddish brown silty clay Damp @ 37 ft		CL							
40							X	39-40	1'	0940

EXPLANATION

- ▼ Water Table (24 Hour)
- ▽ Water Table (Time of Boring)
- PID Photoionization Detection (ppm)
- NO. Identifies Sample by Number
- TYPE Sample Collection Method
- SPLIT-BARREL
- AUGER
- ROCK CORE
- THIN-WALLED TUBE
- CONTINUOUS SAMPLER
- NO RECOVERY
- DEPTH Depth Top and Bottom of Sample
- REC. Actual Length of Recovered Sample in Feet

GRAPHIC LOG LEGEND

- CLAY
- SILT
- SAND
- GRAVEL
- SILTY CLAY
- CLAYEY SILT
- DEBRIS FILL
- HIGHLY ORGANIC (PEAT)
- SANDY CLAY
- CLAYEY SAND
- _____
- _____

DATE DRILLED	PAGE
12-2-88	1 of 2
DRILLING METHOD: Hollow Stem Auger	
DRILLED BY: Compliance Drilling	
LOGGED BY: Steve Lower	
EXISTING GRADE ELEVATION (FT. AMSL)	
LOCATION OR GRID COORDINATES	

SOIL BORING LOG KM—5655-A

KERR-McGEE CORPORATION Hydrology Dept. Engineering Services	KM SUBSIDIARY Chemical	LOCATION Henderson NV	BORING NUMBER M-7B

DEPTH IN FEET	LITHOLOGIC DESCRIPTION	GRAPHIC LOG	UNIFIED SOIL FIELD CLASS.	BLOWS PER FOOT	PID (ppm)	SOIL SAMPLE NO.	SOIL SAMPLE TYPE	SOIL SAMPLE DEPTH	SOIL SAMPLE REC.	REMARKS OR FIELD OBSERVATIONS
45	Reddish-brown silty clay, wet		CL				X	44-45	1'	0950
50	Gray clay, Dry		CL				X	50-51	1'	1040
							X	51-52	1'	1045
55	Transitions to reddish-brown and gray mottled clay, blocky, Dry TD 52 feet									

EXPLANATION

- ▼ Water Table (24 Hour)
- ▽ Water Table (Time of Boring)
- PID Photoionization Detection (ppm)
- NO. Identifies Sample by Number
- TYPE Sample Collection Method

SPLIT-BARREL · AUGER · ROCK CORE · THIN-WALLED TUBE · CONTINUOUS SAMPLER · NO RECOVERY

DEPTH Depth Top and Bottom of Sample
REC. Actual Length of Recovered Sample in Feet

GRAPHIC LOG LEGEND

CLAY · SILT · SAND · GRAVEL · SILTY CLAY · CLAYEY SILT · DEBRIS FILL · HIGHLY ORGANIC (PEAT) · SANDY CLAY · CLAYEY SAND

DATE DRILLED	12-2-98
PAGE	2 of 2
DRILLING METHOD	Hollow Stem Auger
DRILLED BY	Cascade Drilling
LOGGED BY	Stevenson
EXISTING GRADE ELEVATION (FT. AMSL)	
LOCATION OR GRID COORDINATES	

KERR-McGEE CORPORATION
HYDROLOGY DEPARTMENT
MONITORING WELL INSTALLATION DIAGRAM

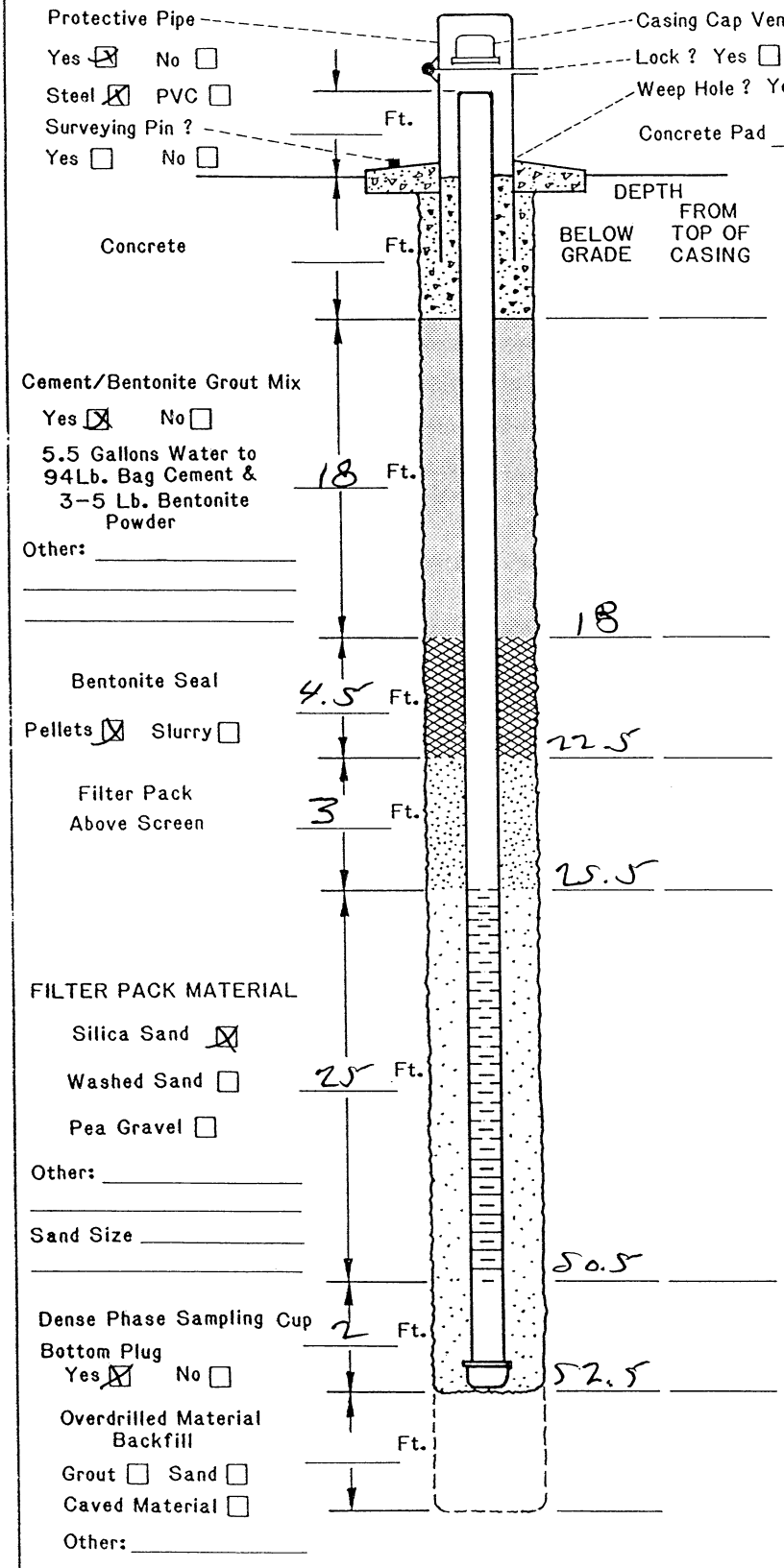

DRILLING INFORMATION:

1. Borehole Diameter= 6.25 Inches.
2. Were Drilling Additives Used ? Yes ☐ No ☒
   Revert ☐ Bentonite ☐ Water ☐
   Solid Auger ☐ Hollow Stem Auger ☒
3. Was Outer Steel Casing Used ? Yes ☐ No ☒
   Depth= _____ to _____ Feet.
4. Borehole Diameter for Outer Casing _____ Inches.

WELL CONSTRUCTION INFORMATION:

1. Type of Casing: PVC ☒ Galvanized ☐ Teflon ☐
   Stainless ☐ Other _____
2. Type of Casing Joints: Screw-Couple ☒ Glue-Couple ☐ Other _____
3. Type of Well Screen: PVC ☒ Galvanized ☐
   Stainless ☐ Teflon ☐ Other _____
4. Diameter of Casing and Well Screen:
   Casing 2 Inches, Screen 2 Inches.
5. Slot Size of Screen: 0.020
6. Type of Screen Perforation: Factory Slotted ☒
   Hacksaw ☐ Drilled ☐ Other _____
7. Installed Protector Pipe w/Lock: Yes ☒ No ☐

WELL DEVELOPMENT INFORMATION:

1. How was Well Developed ? Bailing ☐ Pumping ☒
   Air Surging (Air or Nitrogen) ☐ Other _____
2. Time Spent on Well Development ?
   _____ / _____ Minutes/Hours
3. Approximate Water Volume Removed ? _____ Gallons
4. Water Clarity Before Development ? Clear ☐
   Turbid ☐ Opaque ☐
5. Water Clarity After Development ? Clear ☐
   Turbid ☐ Opaque ☐
6. Did Water have Odor ? Yes ☐ No ☐
   If Yes, Describe _____
7. Did Water have any Color ? Yes ☐ No ☐
   If Yes , Describe _____

WATER LEVEL INFORMATION:

Water Level Summary (From Top of Casing)

During Drilling _____ Ft. Date _____
Before Development _____ Ft. Date _____
After Development _____ Ft. Date _____

Driller/Firm Compliance Drilling Drill Rig Type Mobile B-59 Date Installed 12-2-98
Drill Crew LR Robertson Well No. MW-7B Kerr-McGee Hydrologist Steve Lower

K-M Chemical Corporation
Henderson, Nevada Facility
Well No. M-8

P-1A

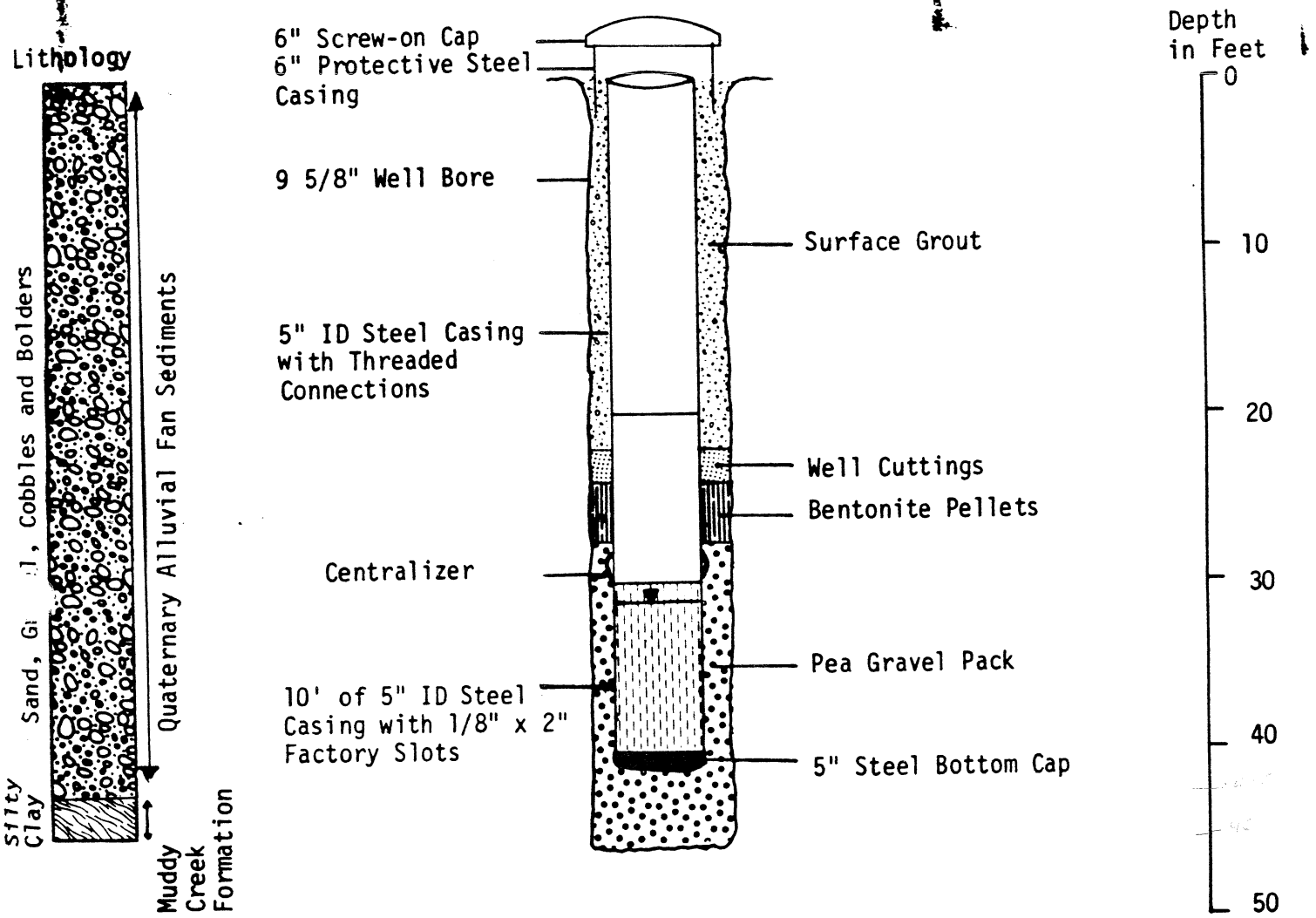

Water Level on 6-16-82

33' 8"

Measrued from Top of Protective Casing

K-M Chemical Corporation
Henderson, Nevada Facility
Well No. M-9

P-A

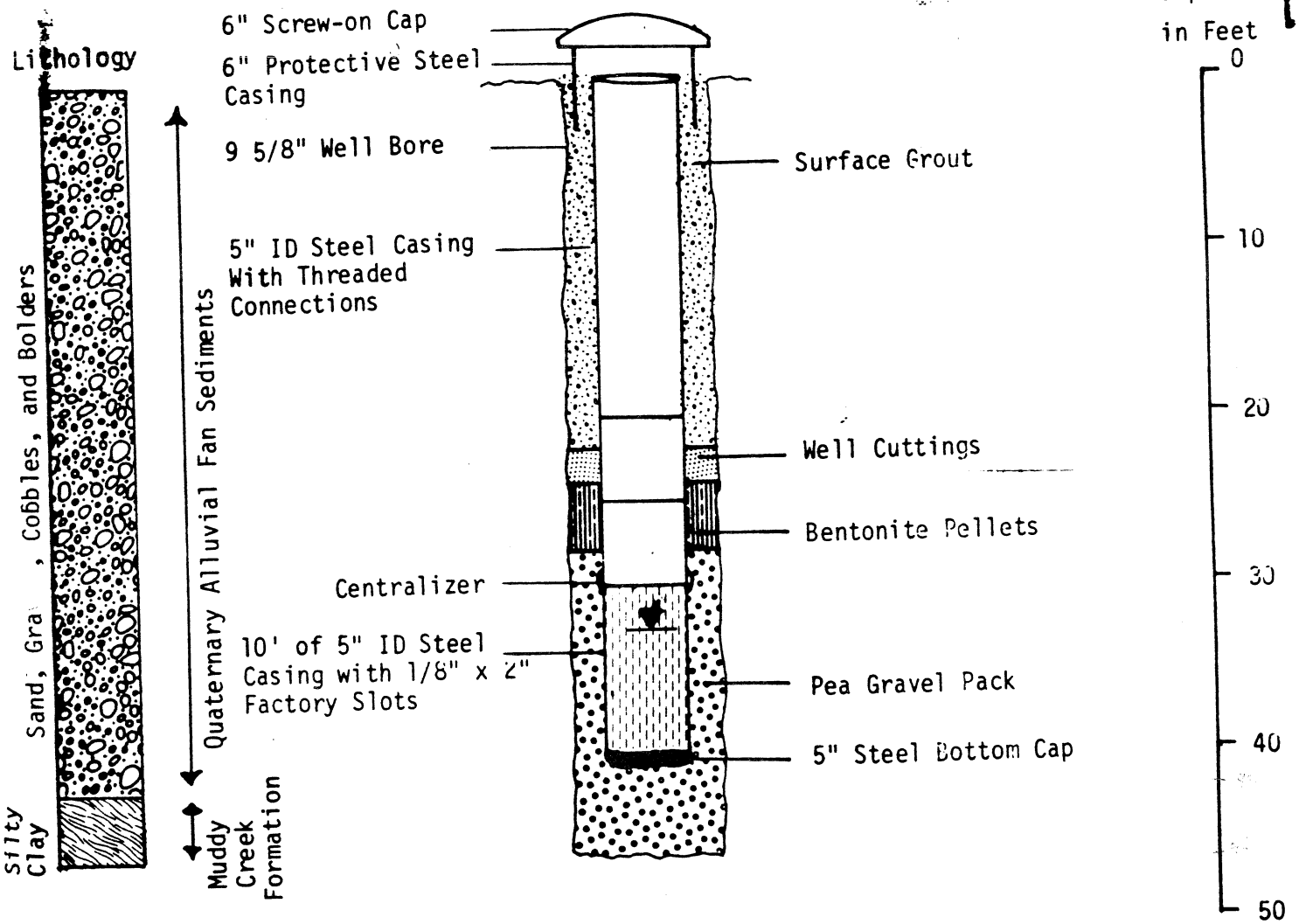

Water Level on 10-05-82
33' 9"
Measured from Top of Protective Casing

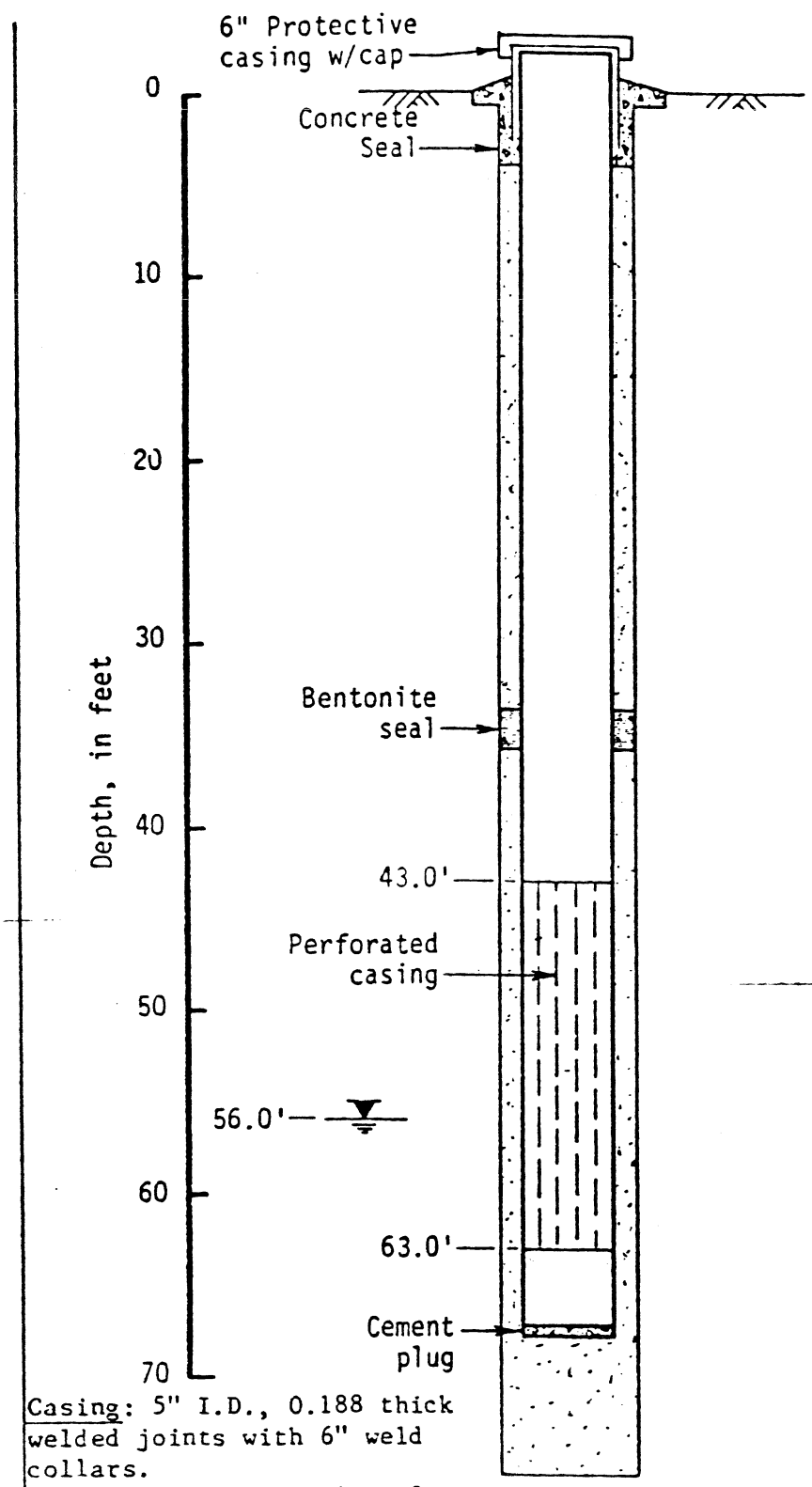

Casing: 5" I.D., 0.188 thick welded joints with 6" weld collars.

Perforations: .090 slot, 8 rows on 6" centers.

Centralizers: One above perforated section.

LOG OF PILOT HOLE AND WELL BORING

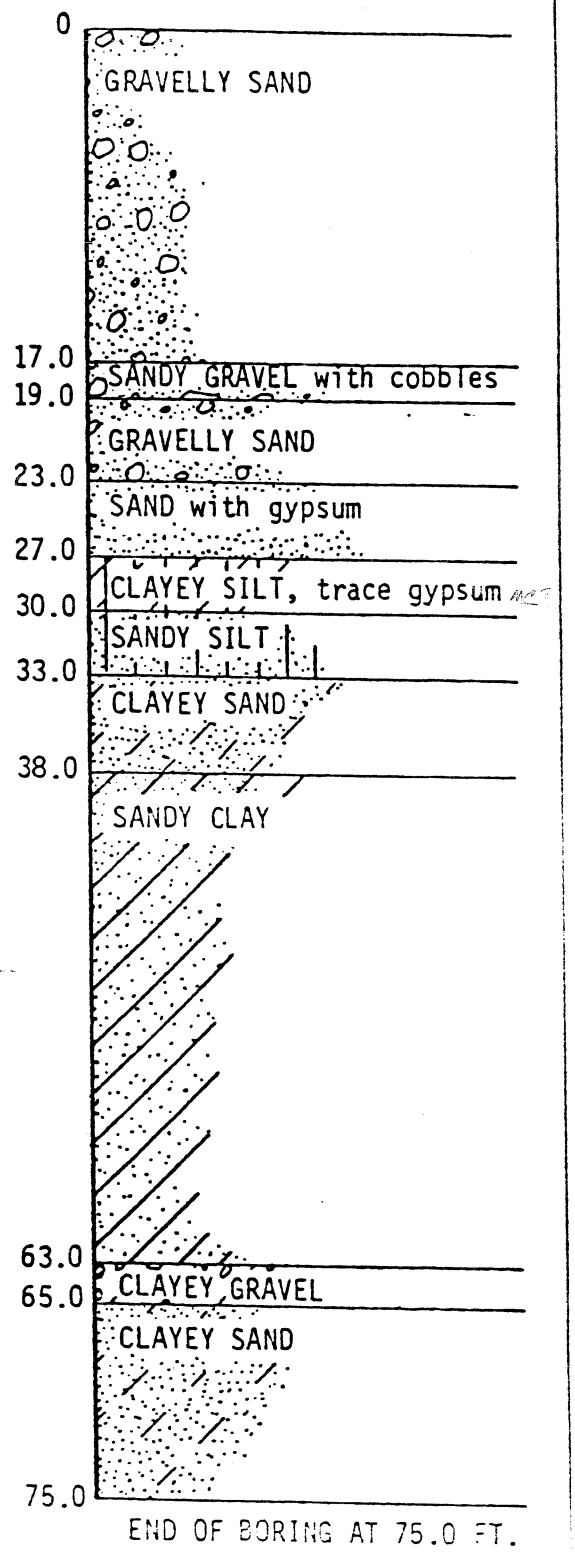

END OF BORING AT 75.0 FT.

WELL M-10

Project No.

83-3168

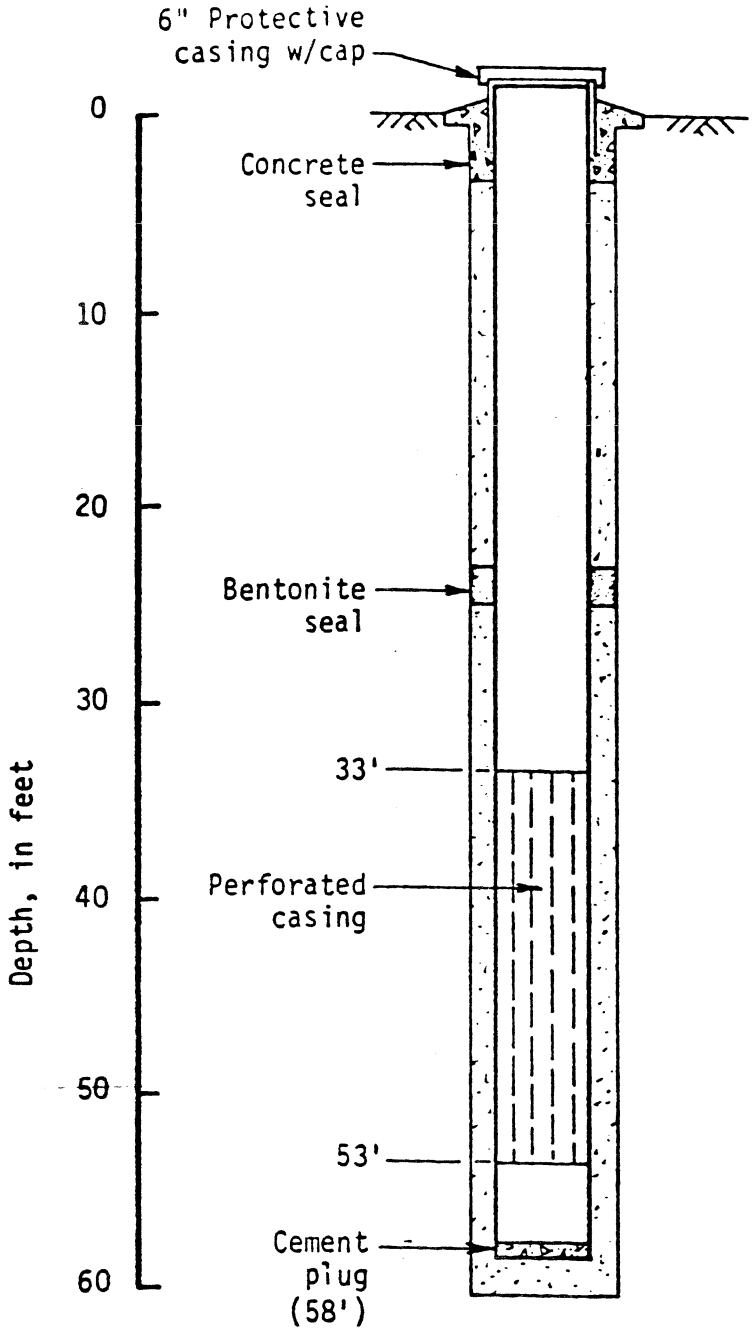

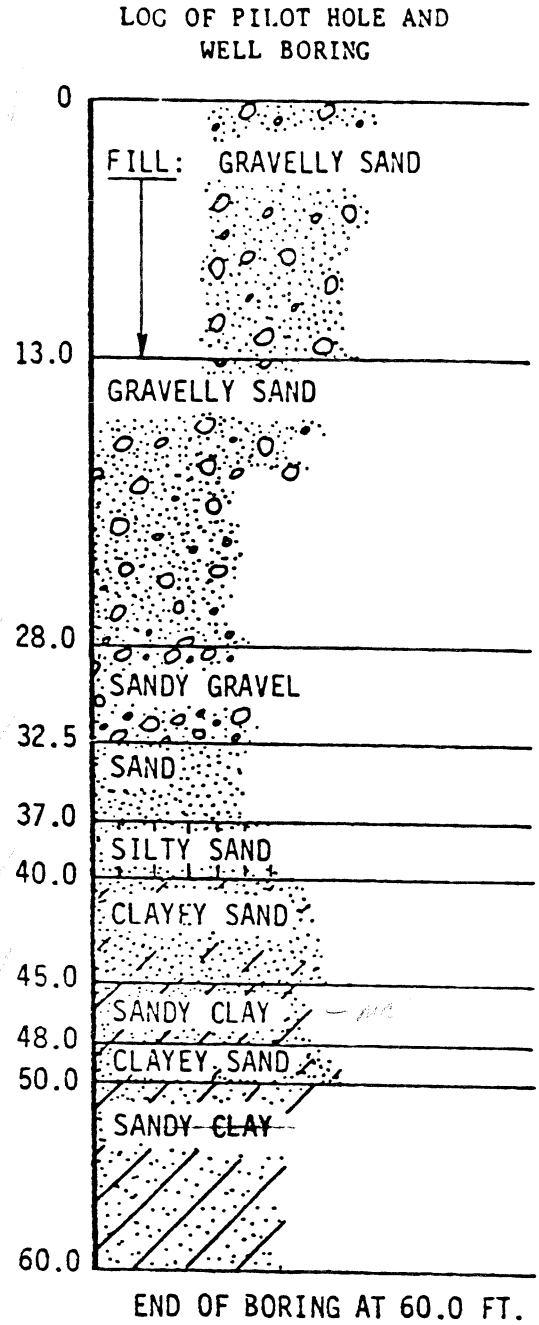

Casing: 5" I.D., 0.188 thick welded joints with 6" weld collars.
Perforations: .090 slot, 8 rows on 6" centers.
Centralizers: One above perforated section.

Note: Water level not measured.

WELL M-11

Project No.
83-3168

Figure No.

Converse Consultants Geotechnical Engineering and Applied Sciences

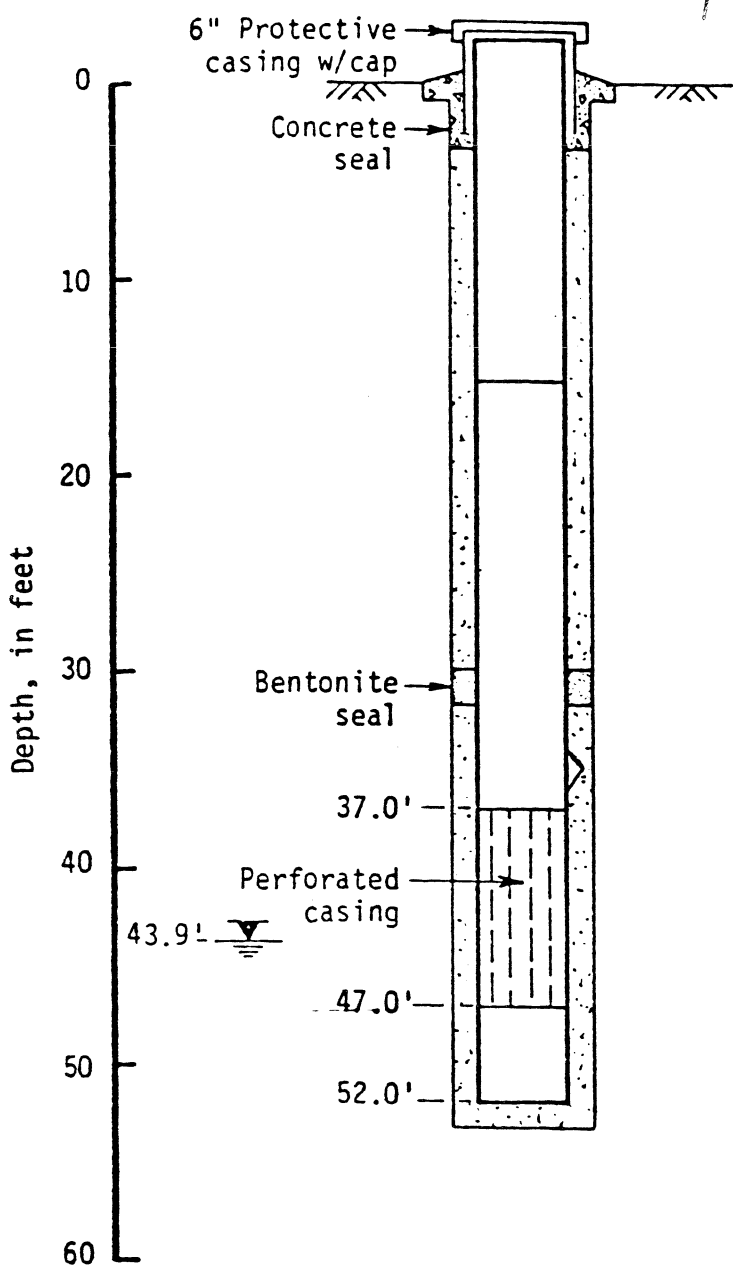

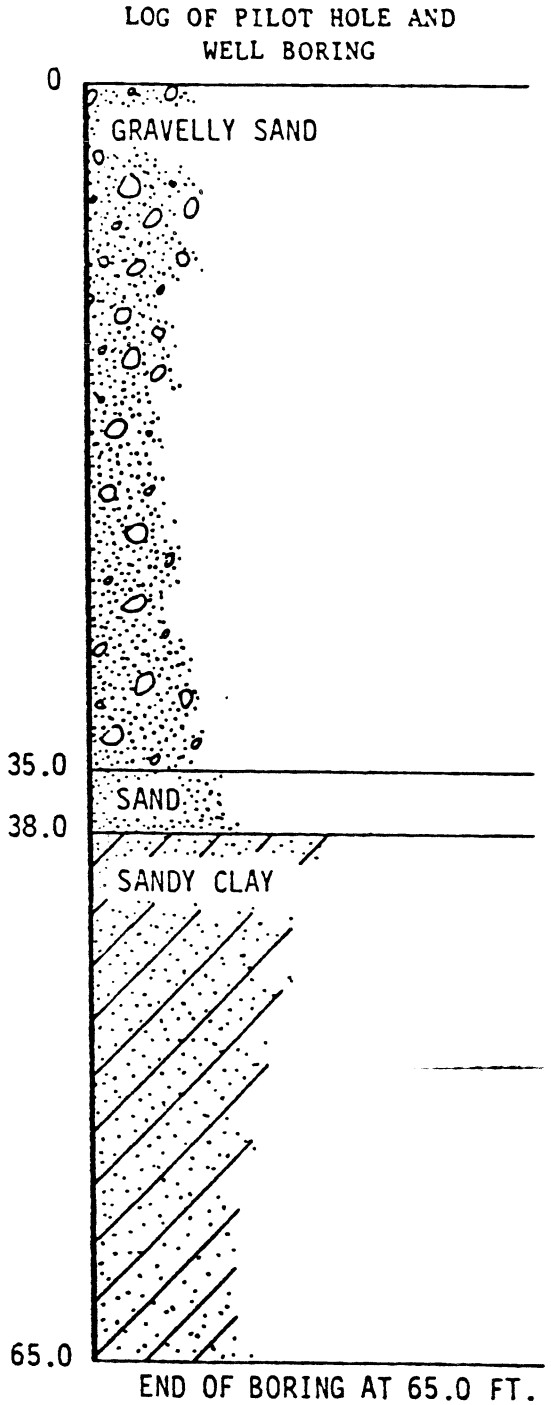

Casing: 5" I.D., 0.188 thick welded joints with 6" weld collars.
Perforations: .090 slot, 8 rows on 6" centers.
Centralizers: One above perforated section.

WELL M-12

Project No.
83-3168

Figure No.
4

Converse Consultants Geotechnical Engineering and Applied Sciences

SOIL BORING LOG KM—5655-A

KERR-McGEE CORPORATION Hydrology Dept. Engineering Services	KM SUBSIDIARY CHEMICAL	LOCATION HENDERSON, NV.	BORING NUMBER M-12A

DEPTH IN FEET	LITHOLOGIC DESCRIPTION	GRAPHIC LOG	UNIFIED SOIL FIELD CLASS.	BLOWS PER FOOT	PID (ppm)	SOIL SAMPLE NO.	SOIL SAMPLE TYPE	SOIL SAMPLE DEPTH	SOIL SAMPLE REC.	REMARKS OR FIELD OBSERVATIONS
0	SAND & CLAY									BOREHOLE LOGGED FROM ROTARY CUTTINGS
10										
15										
	SAND									
20										
25										
	CLAY & GRAVEL									
30										
40										
42			▽							
45										
	SAND									
50										
	TD 50'									

EXPLANATION

- ▼ Water Table (24 Hour)
- ▽ Water Table (Time of Boring)
- PID Photoionization Detection (ppm)
- NO. Identifies Sample by Number
- TYPE Sample Collection Method

SPLIT-BARREL; AUGER; ROCK CORE; THIN-WALLED TUBE; CONTINUOUS SAMPLER; NO RECOVERY

- DEPTH Depth Top and Bottom of Sample
- REC. Actual Length of Recovered Sample in Feet

GRAPHIC LOG LEGEND

CLAY; SILT; SAND; GRAVEL; SILTY CLAY; CLAYEY SILT; DEBRIS FILL; HIGHLY ORGANIC (PEAT); SANDY CLAY; CLAYEY SAND

DATE DRILLED	PAGE
8/30/95	1 of 1

DRILLING METHOD: ROTARY

DRILLED BY: THOMPSON DRILLING CO.

LOGGED BY: THOMPSON DRILLING CO.

EXISTING GRADE ELEVATION (FT. AMSL):

LOCATION OR GRID COORDINATES:

KERR-McGEE CORPORATION
HYDROLOGY DEPARTMENT
MONITORING WELL INSTALLATION DIAGRAM

FLUSH MOUNT WELL

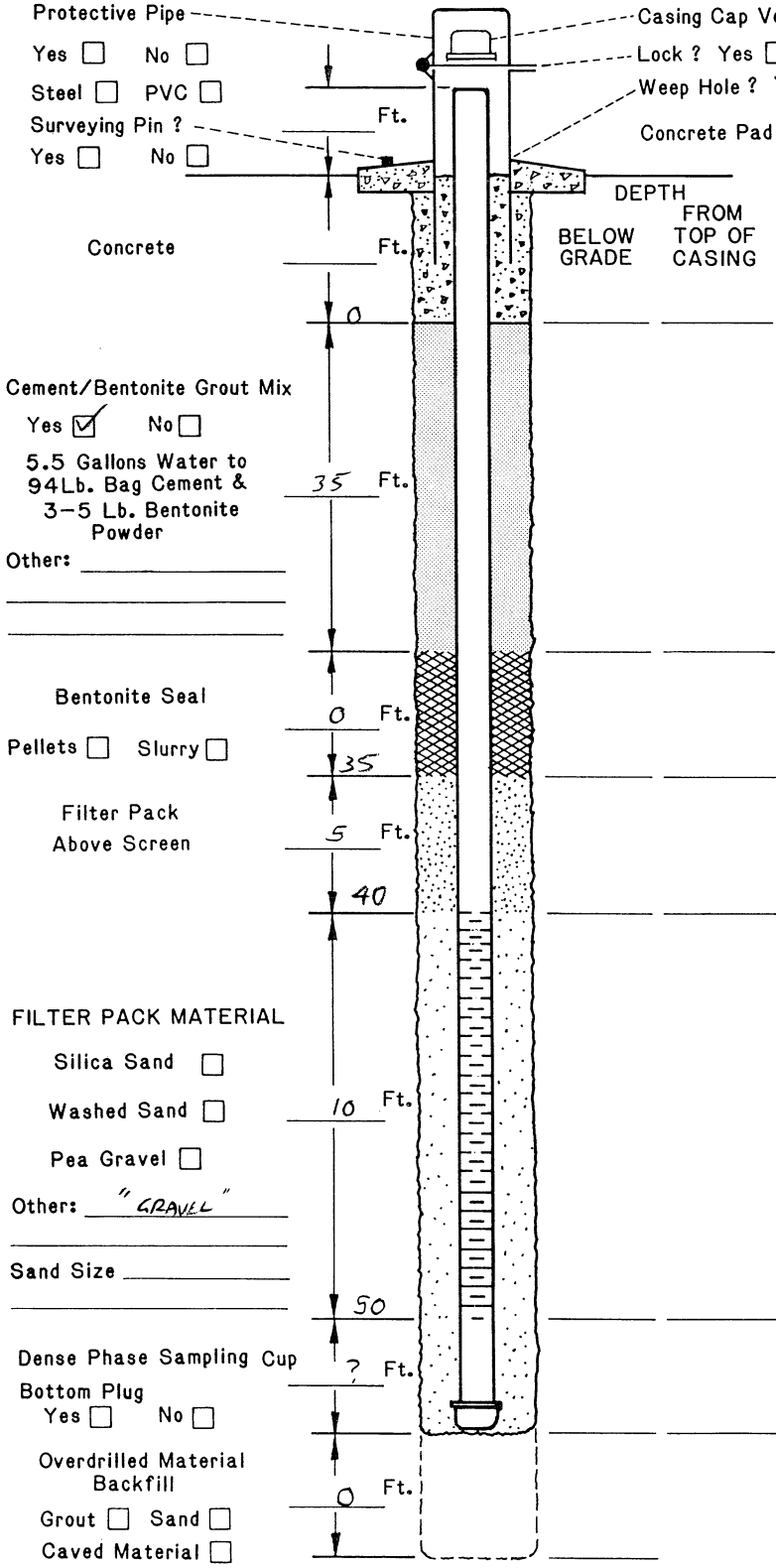

DRILLING INFORMATION:

1. Borehole Diameter= 7 - 7/8 Inches.
2. Were Drilling Additives Used ? Yes ☐ No ☑
   Revert ☐ Bentonite ☐ Water ☐
   Solid Auger ☐ Hollow Stem Auger ☐
3. Was Outer Steel Casing Used ? Yes ☐ No ☑
   Depth= _____ to _____ Feet.
4. Borehole Diameter for Outer Casing _____ Inches.

WELL CONSTRUCTION INFORMATION:

1. Type of Casing: PVC ☑ Galvanized ☐ Teflon ☐
   Stainless ☐ Other _____
2. Type of Casing Joints: Screw-Couple ☑ Glue-Couple ☐ Other _____
3. Type of Well Screen: PVC ☑ Galvanized ☐
   Stainless ☐ Teflon ☐ Other _____
4. Diameter of Casing and Well Screen:
   Casing 3 Inches, Screen 3 Inches.
5. Slot Size of Screen: 0.020
6. Type of Screen Perforation: Factory Slotted ☑
   Hacksaw ☐ Drilled ☐ Other _____
7. Installed Protector Pipe w/Lock: Yes ☐ No ☑

WELL DEVELOPMENT INFORMATION:

1. How was Well Developed ? Bailing ☐ Pumping ☐
   Air Surging (Air or Nitrogen) ☐ Other _____
2. Time Spent on Well Development ?
   _____ / _____ Minutes/Hours
3. Approximate Water Volume Removed ? _____ Gallons
4. Water Clarity Before Development ? Clear ☐
   Turbid ☐ Opaque ☐
5. Water Clarity After Development ? Clear ☐
   Turbid ☐ Opaque ☐
6. Did Water have Odor ? Yes ☐ No ☐
   If Yes, Describe _____
7. Did Water have any Color ? Yes ☐ No ☐
   If Yes , Describe _____

WATER LEVEL INFORMATION:

Water Level Summary (From Top of Casing)

During Drilling _____ Ft. Date _____
Before Development 42' Ft. Date 9/1/95
After Development _____ Ft. Date _____

Driller/Firm THOMPSON DRILLING CO. Drill Rig Type — Date Installed 9/1/95
Drill Crew — Well No. M-12A Kerr-McGee Hydrologist —

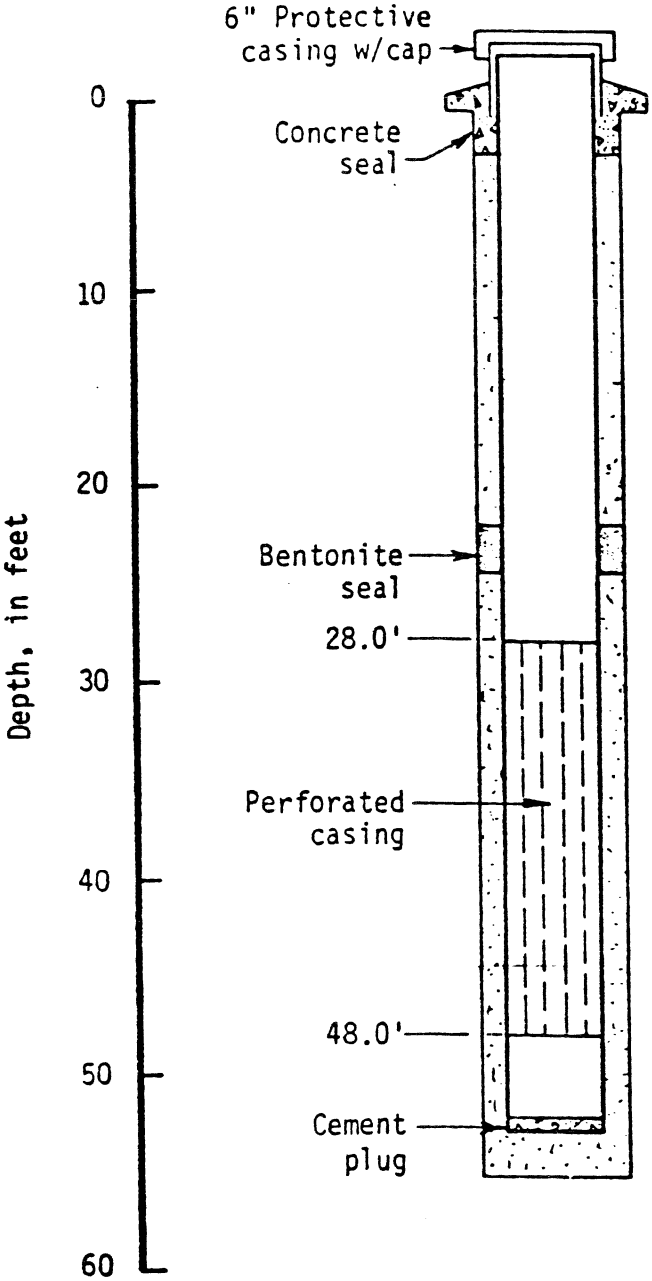

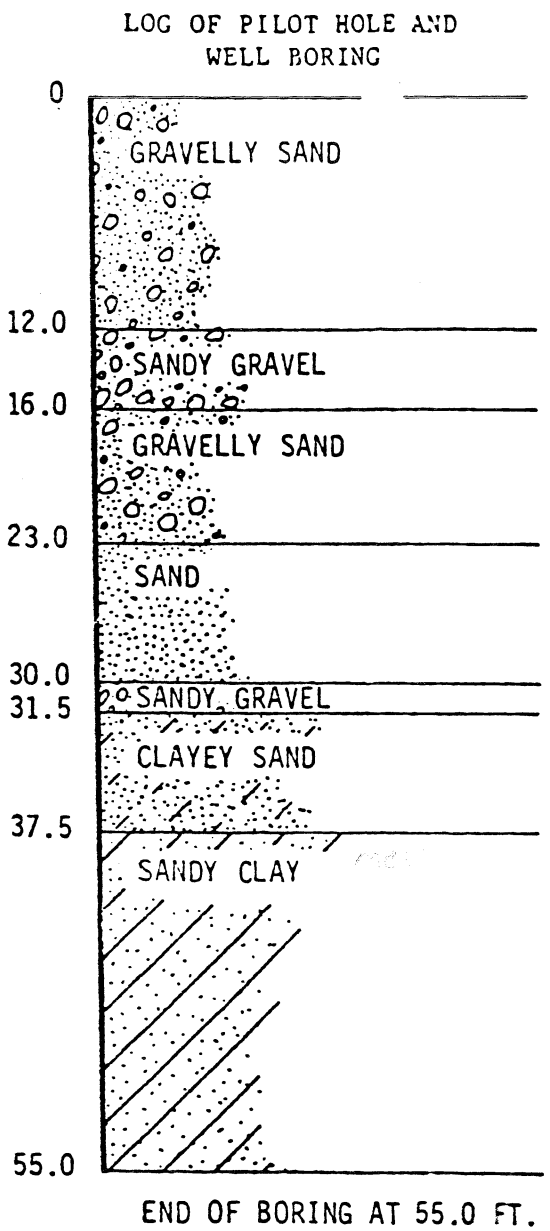

Casing: 5" I.D., 0.188 thick welded joints with 6" weld collars.
Perforations: .090 slot, 8 rows on 6" centers.
Centralizers: One above perforated section.

Note: Water level not measured.

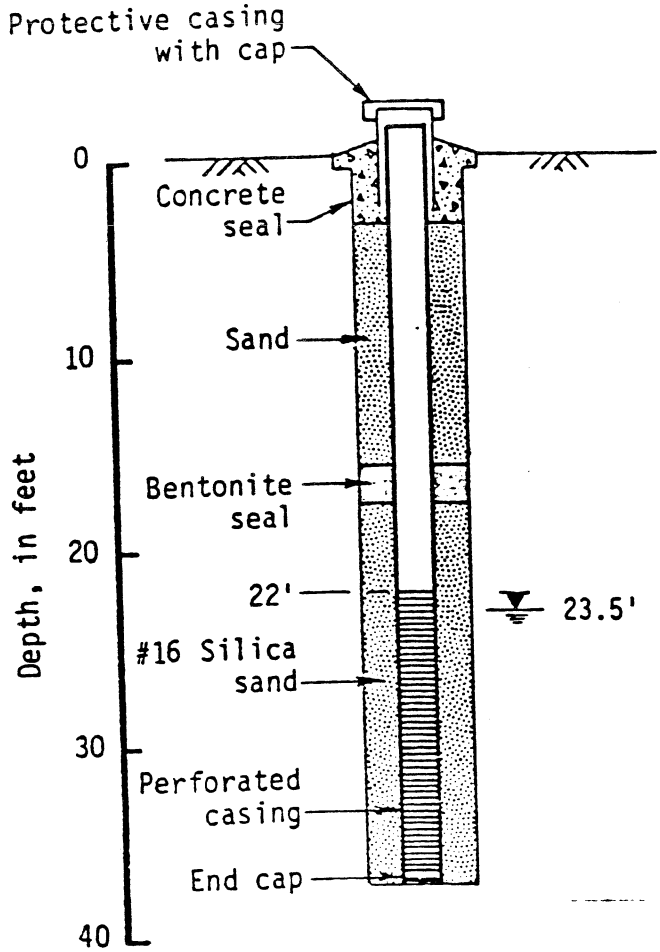

LOG OF PILOT HOLE AND WELL BORING

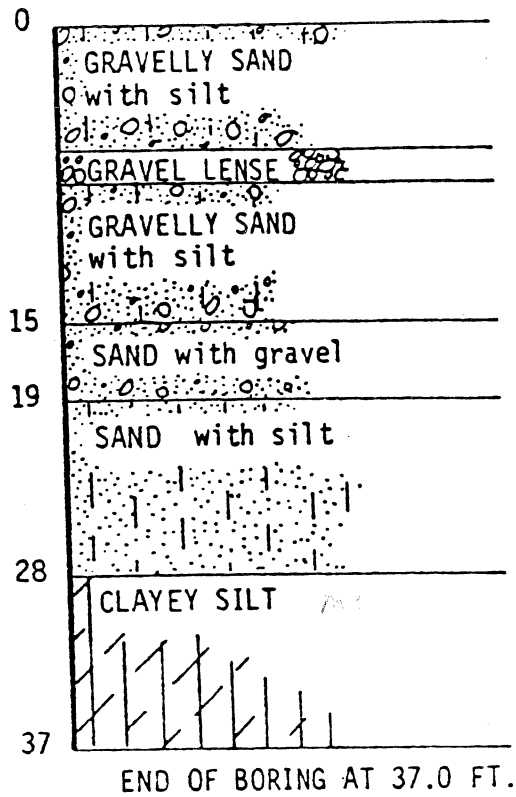

END OF BORING AT 37.0 FT.

Casing: 2" I.D. PVC, No. 200 with cemented joints
Perforations: .020 slots, factory cut
Centralizers: Two, one each near top and bottom of perforated section.

WELL M-14

Project No.
83-3168

Figure No.

P&A 6/03

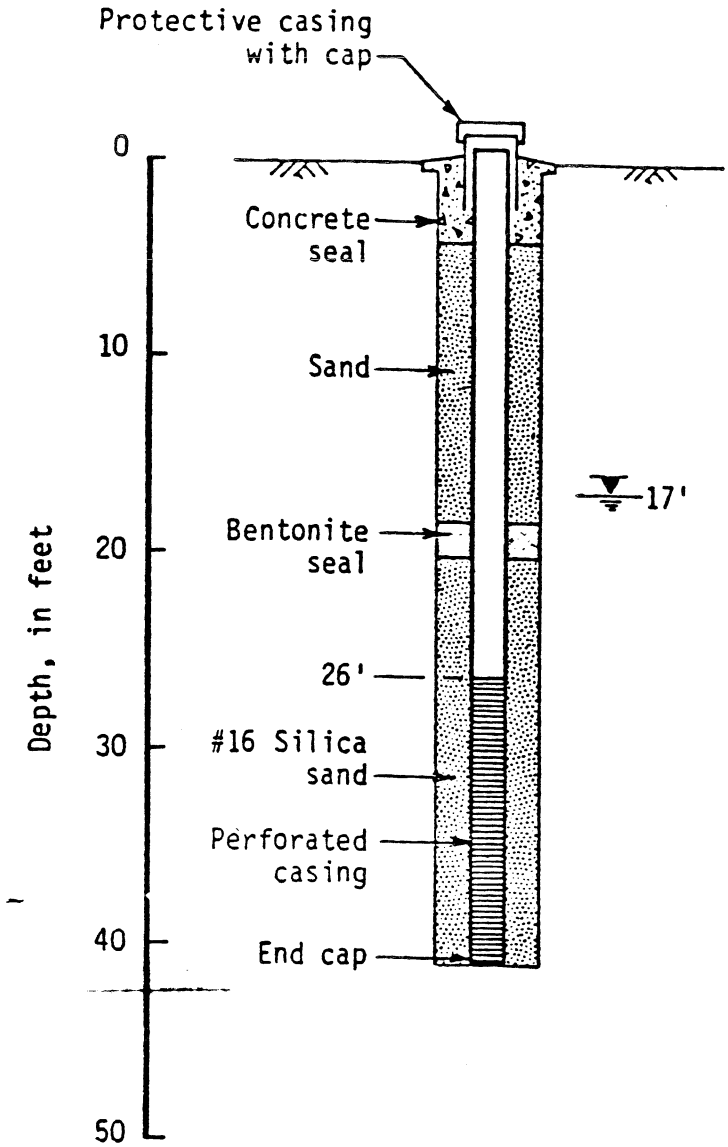

LOG OF PILOT HOLE AND WELL BORING

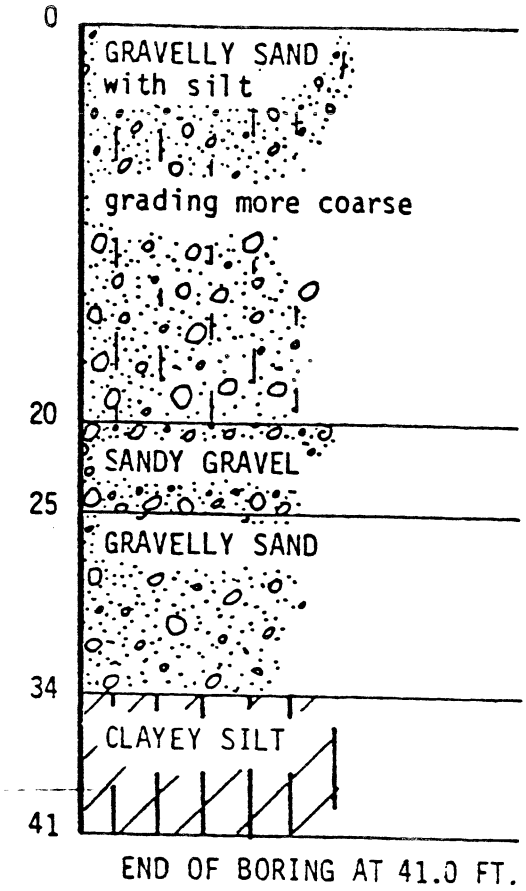

END OF BORING AT 41.0 FT.

Casing: 2" I.D. PVC, No. 200 with cemented joints
Perforations: .020 slots, factory cut
Centralizers: Two, one each near top and bottom of perforated section.

WELL M-15

Project No
83-3168

Figure No

Converse Consultants Geotechnical Engineering

P-A

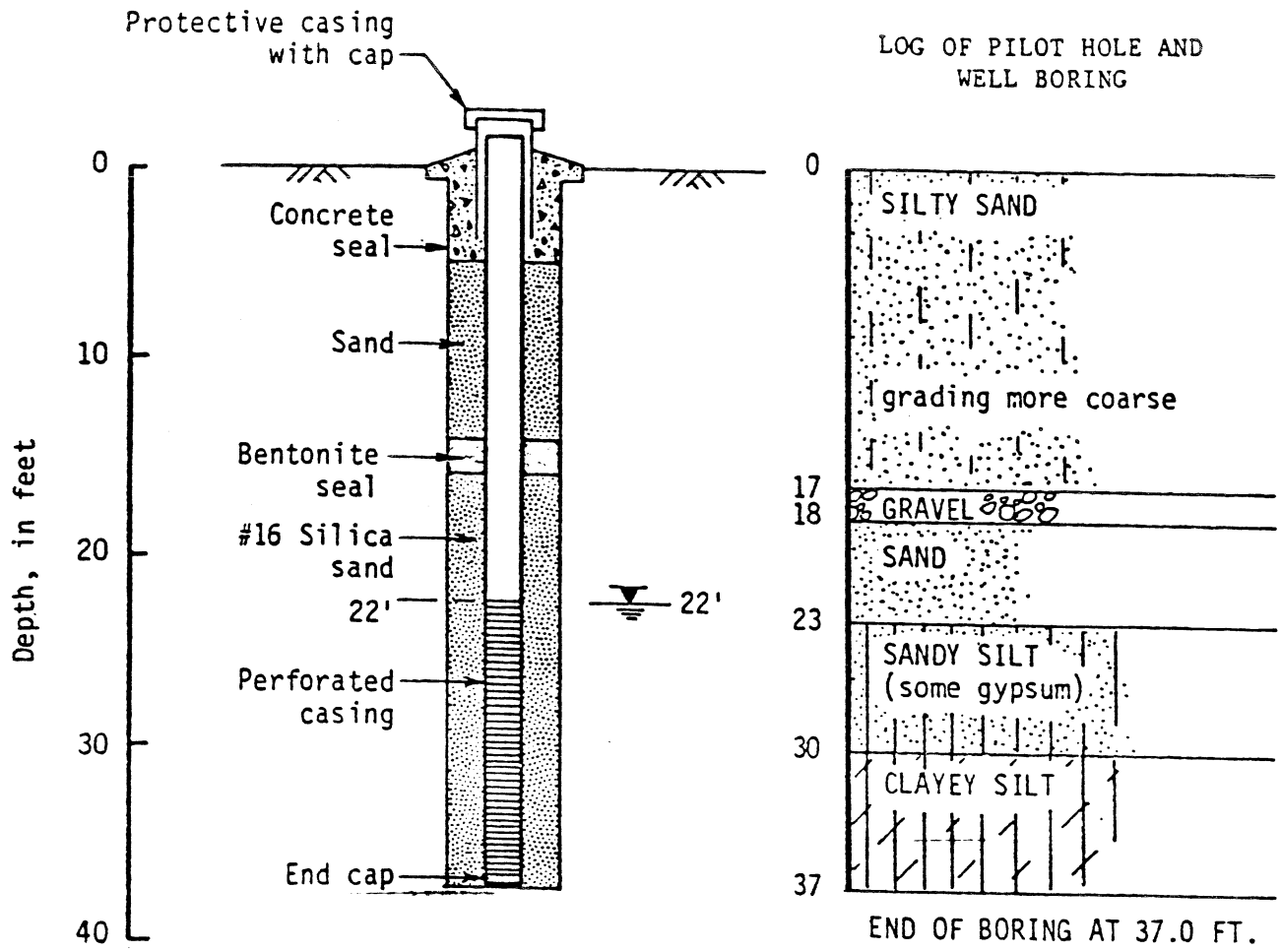

Casing: 2" I.D. PVC, No. 200 with cemented joints
Perforations: .020 slots, factory cut
Centralizers: One, near center of perforated section.

WELL M-16

Project No.
83-3168

Converse Consultants Geotechnical Engineering and Applied Sciences

Figure No.

P&A

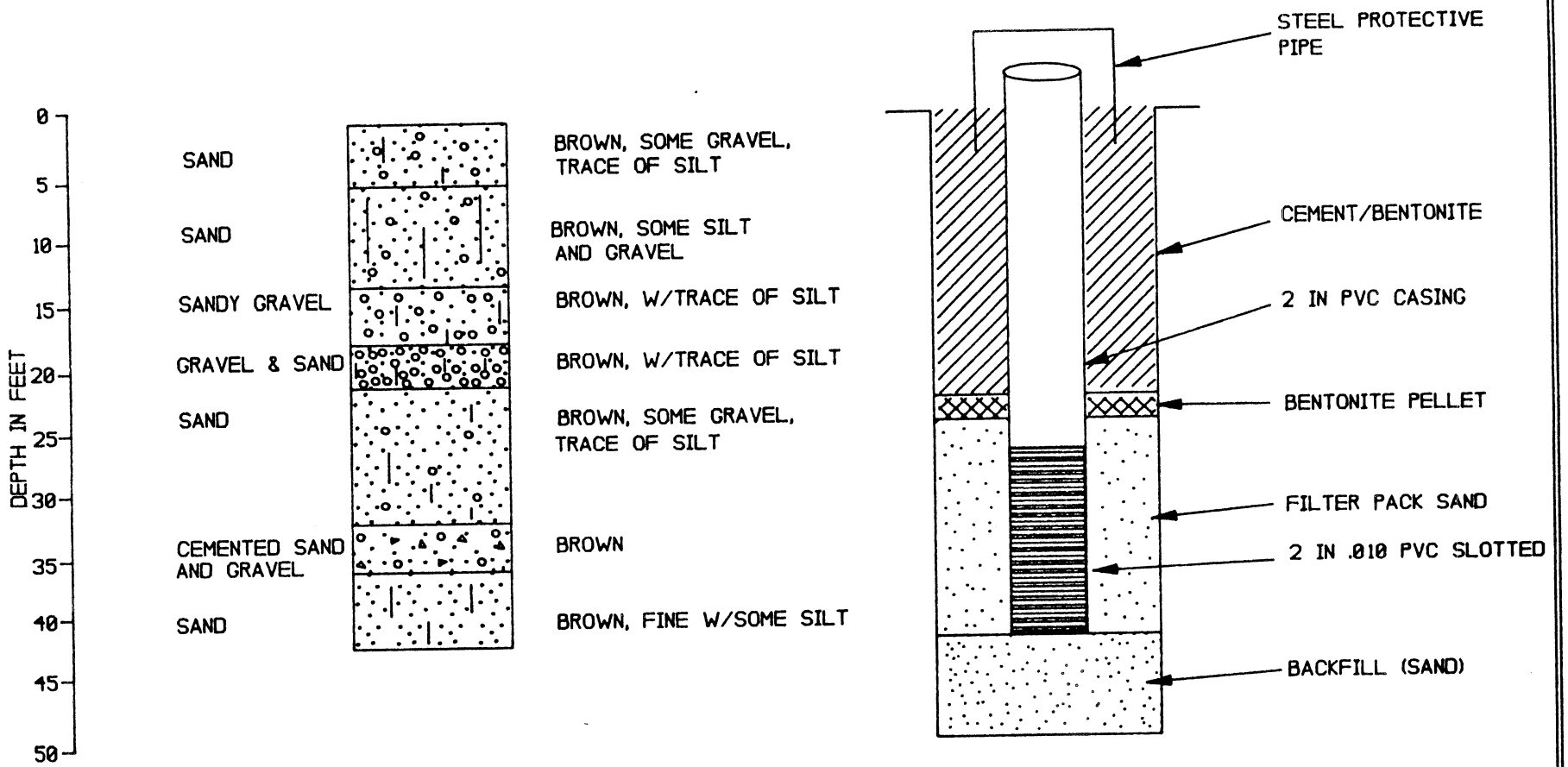

KMCC - HENDERSON, NEVADA - M -17
DATE DRILLED: NOVEMBER 27, 1991

DRILLED BY: WESTERN TECH LOGGED BY: WESTERN TECH
DRILLING METHOD: ROTARY AIR

KERR-McGEE CORPORATION

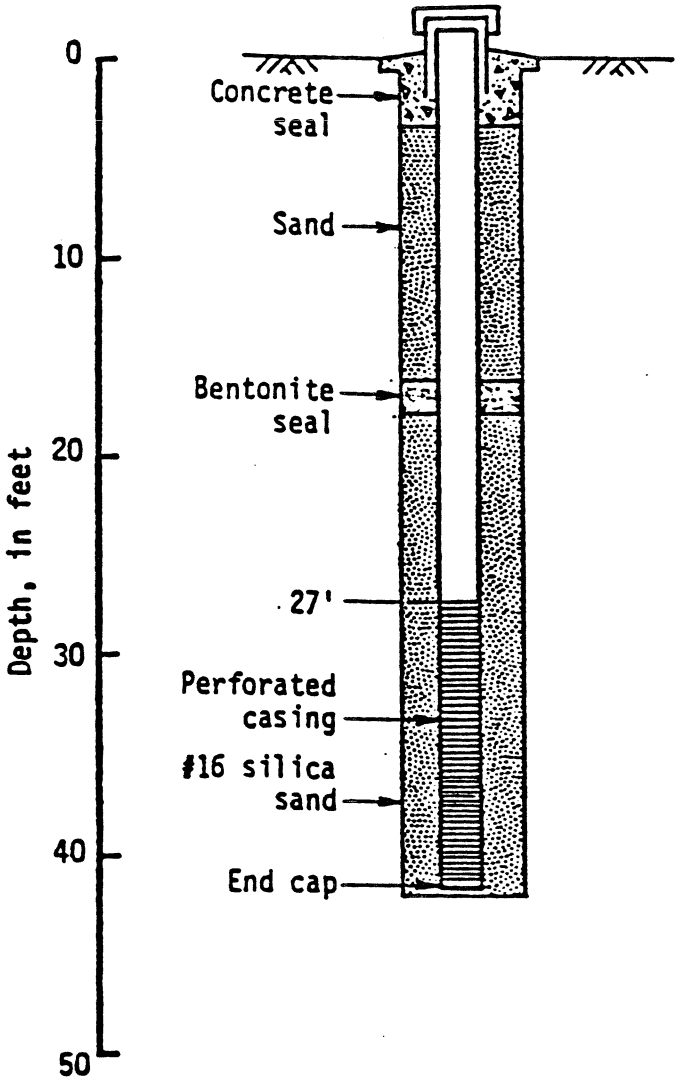

LOG OF PILOT HOLE AND WELL BORING

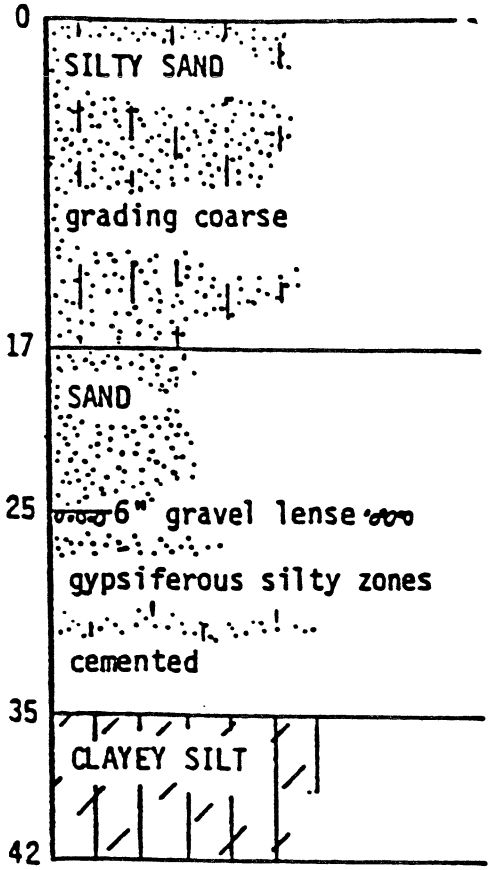

END OF BORING AT 42.0 FT.

Old M-17
P-A

Note: Water level not measured.

Casing: 2" I.D. PVC, No. 200 with cemented joints
Perforations: .020 slots, factory cut
Centralizers: Two, one each near top and bottom of perforated section.

WELL M-17

Project No.
83-3168

Figure No.

P&A 6/03

SOIL BORING LOG KM-5655-A

KERR-McGEE CORPORATION Hydrology Dept. Engineering Services	KM SUBSIDIARY	LOCATION	BORING NUMBER MW-17

DEPTH IN FEET	LITHOLOGIC DESCRIPTION	GRAPHIC LOG	UNIFIED SOIL FIELD CLASS.	BLOWS PER FOOT	PID (ppm)	SOIL SAMPLE NO.	SOIL SAMPLE TYPE	SOIL SAMPLE DEPTH	SOIL SAMPLE REC.	REMARKS OR FIELD OBSERVATIONS
	SAND - w/so. gravel, tr silt, brown		SW							
5	SAND w/si -, gravel, brown		SP							
10										
	SANDY GRAVEL - w/tr. si + brown		GP							
15	GRAVELLY SAND - w/ tr cl+, brown		SP							
20	SAND - w/so gravel tr cl+ brown		SW							
25										
30	Cemented SAND & GRAVEL brown									32½ ▽
35	FINE SAND w/so. si - brown		SM							

EXPLANATION

- ▼ Water Table (24 Hour)
- ▽ Water Table (Time of Boring)
- PID Photoionization Detection (ppm)
- NO. Identifies Sample by Number
- TYPE Sample Collection Method

SPLIT-BARREL · AUGER · ROCK CORE · THIN-WALLED TUBE · CONTINUOUS SAMPLER · NO RECOVERY

DEPTH Depth Top and Bottom of Sample
REC. Actual Length of Recovered Sample in Feet

GRAPHIC LOG LEGEND

CLAY · DEBRIS FILL · SILT · HIGHLY ORGANIC (PEAT) · SAND · SANDY CLAY · GRAVEL · CLAYEY SAND · SILTY CLAY · _____ · CLAYEY SILT · _____

DATE DRILLED	PAGE
11/27/91	1 of 1
DRILLING METHOD: Rotary Air	
DRILLED BY: Western Tech	
LOGGED BY: Western Tech	
EXISTING GRADE ELEVATION (FT. AMSL)	
LOCATION OR GRID COORDINATES	

Elevation 1769.90

KERR-McGEE CORPORATION
HYDROLOGY DEPARTMENT
MONITORING WELL INSTALLATION DIAGRAM

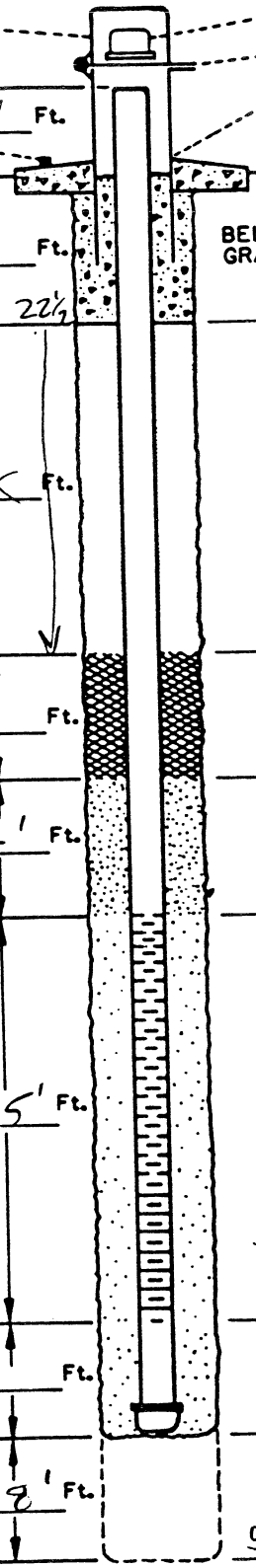

Protective Pipe
Yes ☒ No ☐
Steel ☒ PVC ☐
Surveying Pin ?
Yes ☐ No ☒

Casing Cap Vent ? Yes ☐ No ☒
Lock ? Yes ☐ No ☒
Weep Hole ? Yes ☐ No ☒
Concrete Pad _____ Ft. x _____ Ft. x _____ Inches

	Ft.	DEPTH BELOW GRADE	DEPTH FROM TOP OF CASING
Concrete	3'		
	22½		
Cement/Bentonite Grout Mix Yes ☒ No ☐ 5.5 Gallons Water to 94Lb. Bag Cement & 3-5 Lb. Bentonite Powder Others: _____	X		
		22½	
Bentonite Seal Pellets ☐ Slurry ☐		24½	
Filter Pack Above Screen	2'	27'	
FILTER PACK MATERIAL Silica Sand ☒ Washed Sand ☐ Pea Gravel ☐ Others: _____ Sand Size #16	15'	42'	
Dense Phase Sampling Cup Bottom Plug Yes ☐ No ☒			
Overdrilled Material Backfill Grout ☐ Sand ☒ Caved Material ☐ Others: _____	8'	50'	

DRILLING INFORMATION:

1. Borehole Diameter= 6 Inches.
2. Were Drilling Additives Used ? Yes ☐ No ☒
   Revert ☐ Bentonite ☐ Water ☐
   Solid Auger ☐ Hollow Stem Auger ☐
3. Was Outer Steel Casing Used ? Yes ☒ No ☐
   Rogers Air
   Depth= _____ to _____ Feet.
4. Borehole Diameter for Outer Casing - Inches.

WELL CONSTRUCTION INFORMATION:

1. Type of Casing: PVC ☒ Galvanized ☐ Teflon ☐
   Stainless ☐ Other _____
2. Type of Casing Joints: Screw-Couple ☒ Glue-Couple ☐ Other _____
3. Type of Well Screen: PVC ☒ Galvanized ☐
   Stainless ☐ Teflon ☐ Other _____
4. Diameter of Casing and Well Screen:
   Casing 2 Inches, Screen 2 Inches.
5. Slot Size of Screen: .020
6. Type of Screen Perforation: Factory Slotted ☒
   Hacksaw ☐ Drilled ☐ Other _____
7. Installed Protector Pipe w/Lock: Yes ☐ No ☐

WELL DEVELOPMENT INFORMATION:

1. How was Well Developed ? Bailing ☐ Pumping ☐
   Air Surging (Air or Nitrogen) ☐ Other _____
2. Time Spent on Well Development ?
   _____/_____ Minutes/Hours
3. Approximate Water Volume Removed ? _____ Gallons
4. Water Clarity Before Development ? Clear ☐
   Turbid ☐ Opaque ☐
5. Water Clarity After Development ? Clear ☐
   Turbid ☐ Opaque ☐
6. Did Water have Odor ? Yes ☐ No ☐
   If Yes, Describe _____
7. Did Water have any Color ? Yes ☐ No ☐
   If Yes, Describe _____

WATER LEVEL INFORMATION:

Water Level Summary (From Top of Casing)

During Drilling _____ Ft. Date _____
Before Development _____ Ft. Date _____
After Development _____ Ft. Date _____

Driller/Firm Western Technologies Drill Rig Type Midway 13M Date Installed 11-27-91
Drill Crew _____ Well No. M-17 Kerr-McGee Hydrologist _____

SOIL BORING LOG KM-5655-B

KERR-McGEE CORPORATION Hydrology Dept. - S&EA Division	KM SUBSIDIARY KMCLLC	LOCATION HENDERSON, NV	BORING NUMBER MW4

DEPTH IN FEET	LITHOLOGIC DESCRIPTION	GRAPHIC LOG	UNIFIED SOIL FIELD CLASS.	BLOWS PER 6"	PID (ppm)	SOIL SAMPLE NO.	SOIL SAMPLE TYPE	SOIL SAMPLE DEPTH	SOIL SAMPLE REC.	REMARKS OR FIELD OBSERVATIONS
0	0-2± silty gravelly SAND, 15-25% silt, 20-25% fine gravel to ½", vf-vc, SA sand, brown, locally com caliche nodules - sand size									
5										
10										
15										
20	20-33 silty sdy GRAVEL, brown, 20% silt, 20% vf-vc sand, gravel to 2"									
25										
30										
33										dump @ 32'
35	33-35 sdy cly SILT lt brown, 10-15% clay, 15-20% vf-m sand									wet @ 35
37	35-39 Caliche, fnd sdy GRAVEL, hard, 80% gravel to 2", 20% m-vc sd.									

EXPLANATION

- ▼ Water Table (24 Hour)
- ▽ Water Table (Time of Boring)
- PID Photoionization Detection (ppm)
- NO. Identifies Sample by Number
- TYPE Sample Collection Method

SPLIT-BARREL | AUGER | ROCK CORE | THIN-WALLED TUBE | CONTINUOUS SAMPLER | NO RECOVERY

DEPTH Depth Top and Bottom of Sample
REC. Actual Length of Recovered Sample in Feet

GRAPHIC LOG LEGEND

CLAY | DEBRIS FILL | SILT | HIGHLY ORGANIC (PEAT) | SAND | SANDY CLAY | GRAVEL | CLAYEY SAND | SILTY CLAY | _____ | CLAYEY SILT | _____

DATE DRILLED	PAGE
6-18-03	1 of 2

DRILLING METHOD: HSA

DRILLED BY: ELITE DRILLING

LOGGED BY: ED KRISH

EXISTING GRADE ELEVATION (FT. AMSL)

LOCATION OR GRID COORDINATES

SOIL BORING LOG KM-5655-B

KERR-McGEE CORPORATION Hydrology Dept. - S&EA Division	KM SUBSIDIARY KMCLLC	LOCATION HENDERSON, NV	BORING NUMBER M17A

DEPTH IN FEET	LITHOLOGIC DESCRIPTION	GRAPHIC LOG	UNIFIED SOIL FIELD CLASS.	BLOWS PER 6"	PID (ppm)	SOIL SAMPLE NO.	TYPE	DEPTH	REC.	REMARKS OR FIELD OBSERVATIONS
	39-44 SAND, clean, dk brn, vf-m w/ com caliche nodules									very wet
44	44-45 clay SILT mod brn, 20-30% clay									MC @ 44

EXPLANATION

- ▼ Water Table (24 Hour)
- ▽ Water Table (Time of Boring)
- PID Photoionization Detection (ppm)
- NO. Identifies Sample by Number
- TYPE Sample Collection Method
- SPLIT-BARREL
- AUGER
- ROCK CORE
- THIN-WALLED TUBE
- CONTINUOUS SAMPLER
- NO RECOVERY
- DEPTH Depth Top and Bottom of Sample
- REC. Actual Length of Recovered Sample in Feet

GRAPHIC LOG LEGEND

- CLAY
- DEBRIS FILL
- SILT
- HIGHLY ORGANIC (PEAT)
- SAND
- SANDY CLAY
- GRAVEL
- CLAYEY SAND
- SILTY CLAY
- CLAYEY SILT

DATE DRILLED	6-18-03
PAGE	2 of 2
DRILLING METHOD	HSA
DRILLED BY	ELITE DRILLING
LOGGED BY	ED KRISH
EXISTING GRADE ELEVATION (FT. AMSL)	
LOCATION OR GRID COORDINATES	

KERR-McGEE CORPORATION
HYDROLOGY DEPARTMENT
MONITORING WELL INSTALLATION DIAGRAM

FLUSH MOUNT

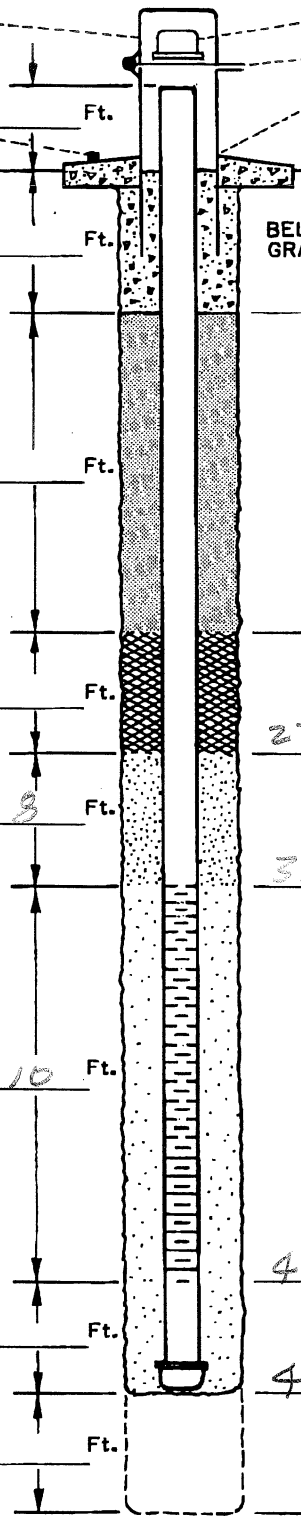

Protective Pipe — Yes ☐ No ☒ — Steel ☐ PVC ☐ — Ft.
Surveying Pin ? Yes ☐ No ☒
Casing Cap Vent ? Yes ☐ No ☒
Lock ? Yes ☐ No ☐
Weep Hole ? Yes ☐ No ☒
Concrete Pad _____ Ft. x _____ Ft. x _____ Inches

DEPTH FROM TOP OF CASING

	Ft.	BELOW GRADE	FROM TOP OF CASING
Concrete			
Cement/Bentonite Grout Mix — Yes ☐ No ☐ — 5.5 Gallons Water to 94Lb. Bag Cement & 3-5 Lb. Bentonite Powder — Other: _____			
Bentonite Seal — Pellets ☒ Slurry ☐		27	
Filter Pack Above Screen	3	35	
FILTER PACK MATERIAL — Silica Sand ☒ — Washed Sand ☐ — Pea Gravel ☐ — Other: _____ — Sand Size 12-20	10	45	
Dense Phase Sampling Cup — Bottom Plug Yes ☐ No ☒		45	
Overdrilled Material Backfill — Grout ☐ Sand ☐ — Caved Material ☐ — Other: _____			

DRILLING INFORMATION:

1. Borehole Diameter= 9 Inches.
2. Were Drilling Additives Used ? Yes ☐ No ☒
   Revert ☐ Bentonite ☐ Water ☐
   Solid Auger ☐ Hollow Stem Auger ☐
3. Was Outer Steel Casing Used ? Yes ☐ No ☒
   Depth= _____ to _____ Feet.
4. Borehole Diameter for Outer Casing _____ Inches.

WELL CONSTRUCTION INFORMATION:

1. Type of Casing: PVC ☒ Galvanized ☐ Teflon ☐
   Stainless ☐ Other _____
2. Type of Casing Joints: Screw-Couple ☒ Glue-Couple ☐ Other _____
3. Type of Well Screen: PVC ☒ Galvanized ☐
   Stainless ☐ Teflon ☐ Other _____
4. Diameter of Casing and Well Screen:
   Casing 2 Inches, Screen 2 Inches.
5. Slot Size of Screen: .020
6. Type of Screen Perforation: Factory Slotted ☒
   Hacksaw ☐ Drilled ☐ Other _____
7. Installed Protector Pipe w/Lock: Yes ☐ No ☒

WELL DEVELOPMENT INFORMATION:

1. How was Well Developed ? Bailing ☐ Pumping ☐
   Air Surging (Air or Nitrogen) ☐ Other _____
2. Time Spent on Well Development ?
   _____/_____ Minutes/Hours
3. Approximate Water Volume Removed ? _____ Gallons
4. Water Clarity Before Development ? Clear ☐
   Turbid ☐ Opaque ☐
5. Water Clarity After Development ? Clear ☐
   Turbid ☐ Opaque ☐
6. Did Water have Odor ? Yes ☐ No ☐
   If Yes, Describe _____
7. Did Water have any Color ? Yes ☐ No ☐
   If Yes , Describe _____

WATER LEVEL INFORMATION:

Water Level Summary (From Top of Casing)

During Drilling _____ Ft. Date _____
Before Development 32.93 Ft. Date 6-19-03
After Development _____ Ft. Date _____

Driller/Firm TENV/ELITE — Drill Rig Type CME 75 — Date Installed 6-18-03
Drill Crew TEM / CHRIS — Well No. MW7A — Kerr-McGee Hydrologist ED KRISH

WELL CONSTRUCTION DIAGRAM

MONITOR WELL M-18

HENDERSON FACILITY

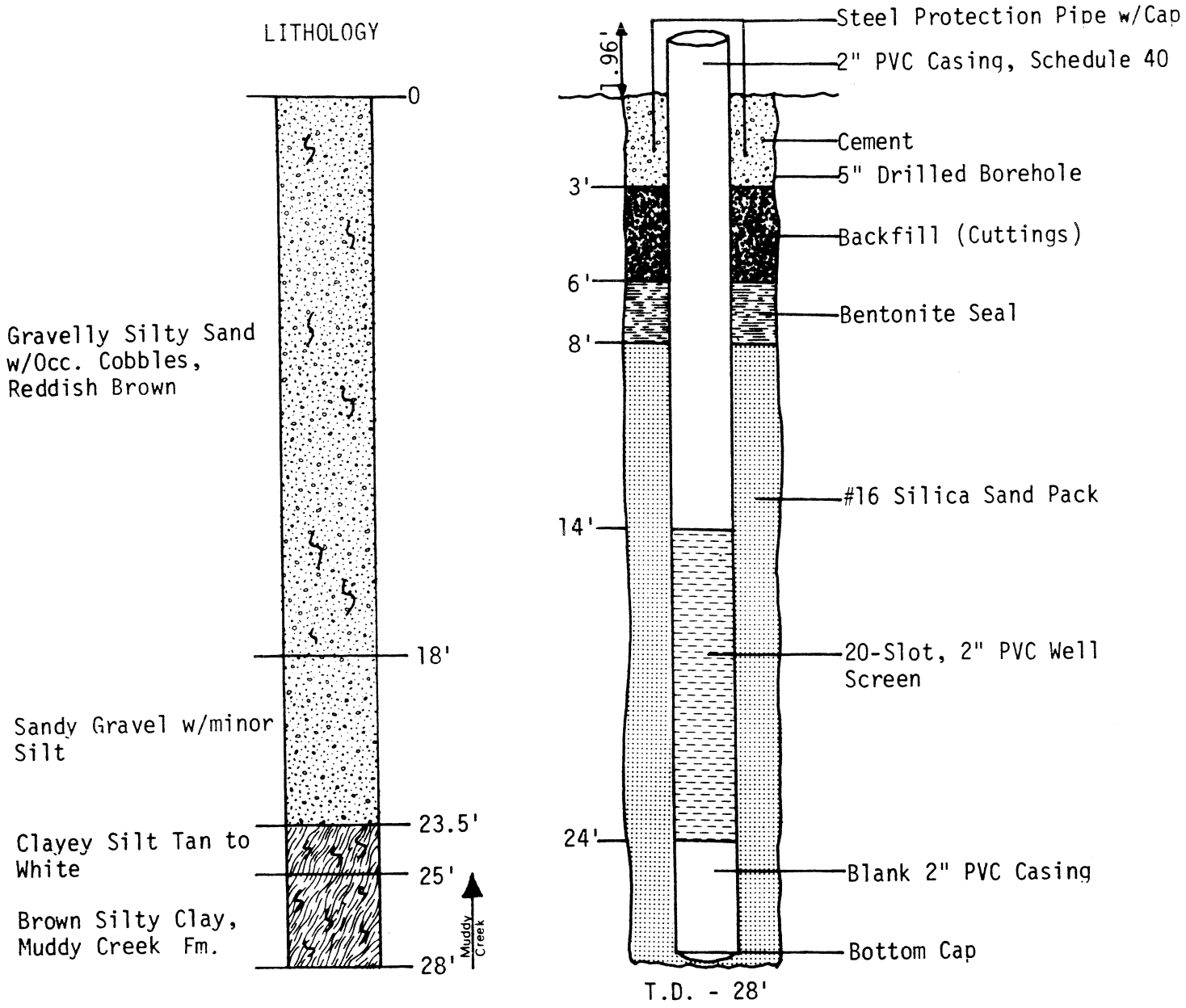

Note: Drilled 8-10-83

WELL CONSTRUCTION DIAGRAM

MONITOR WELL M-19

HENDERSON FACILITY

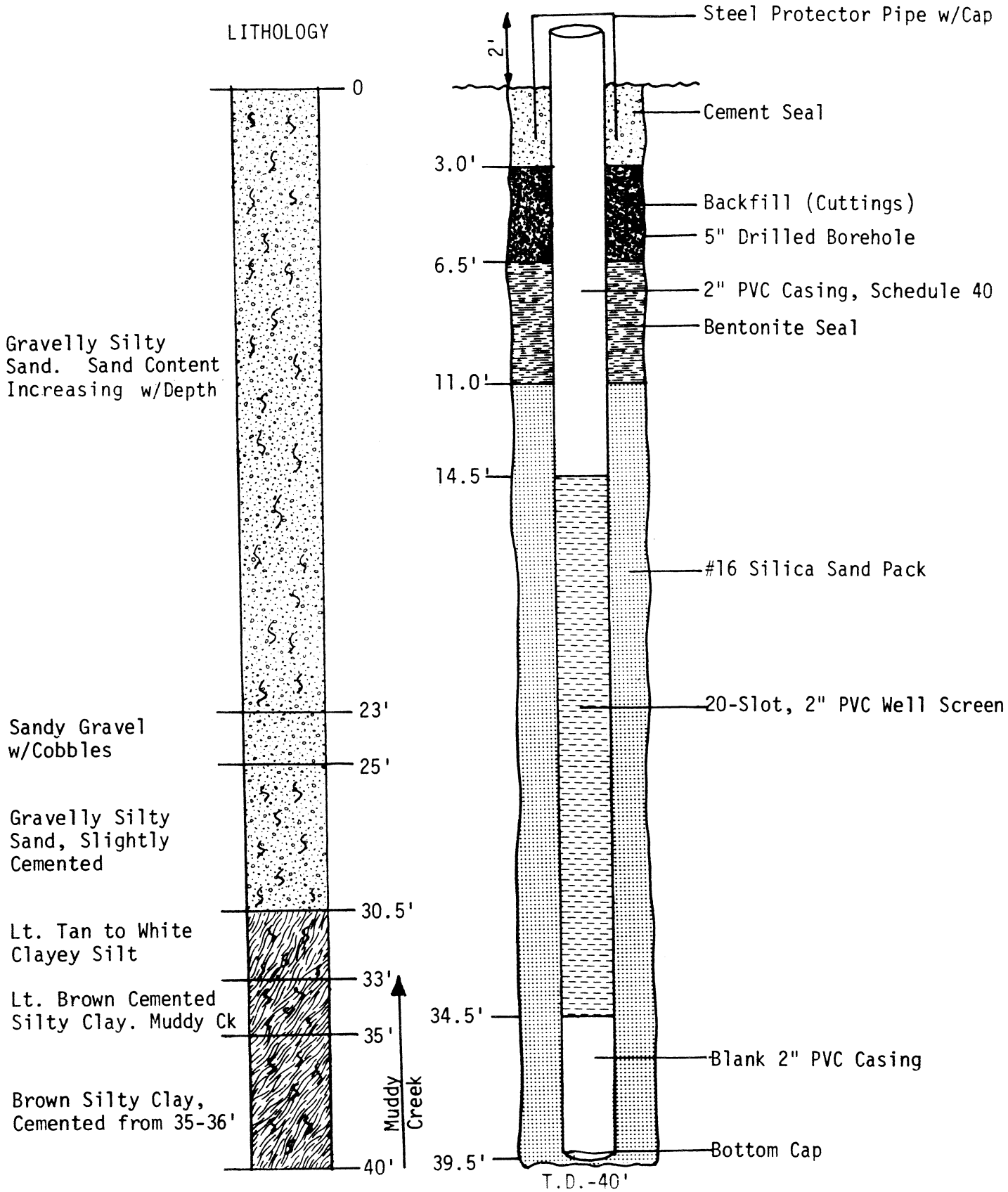

P & A

WELL CONSTRUCTION DIAGRAM
MONITOR WELL M-20
HENDERSON FACILITY

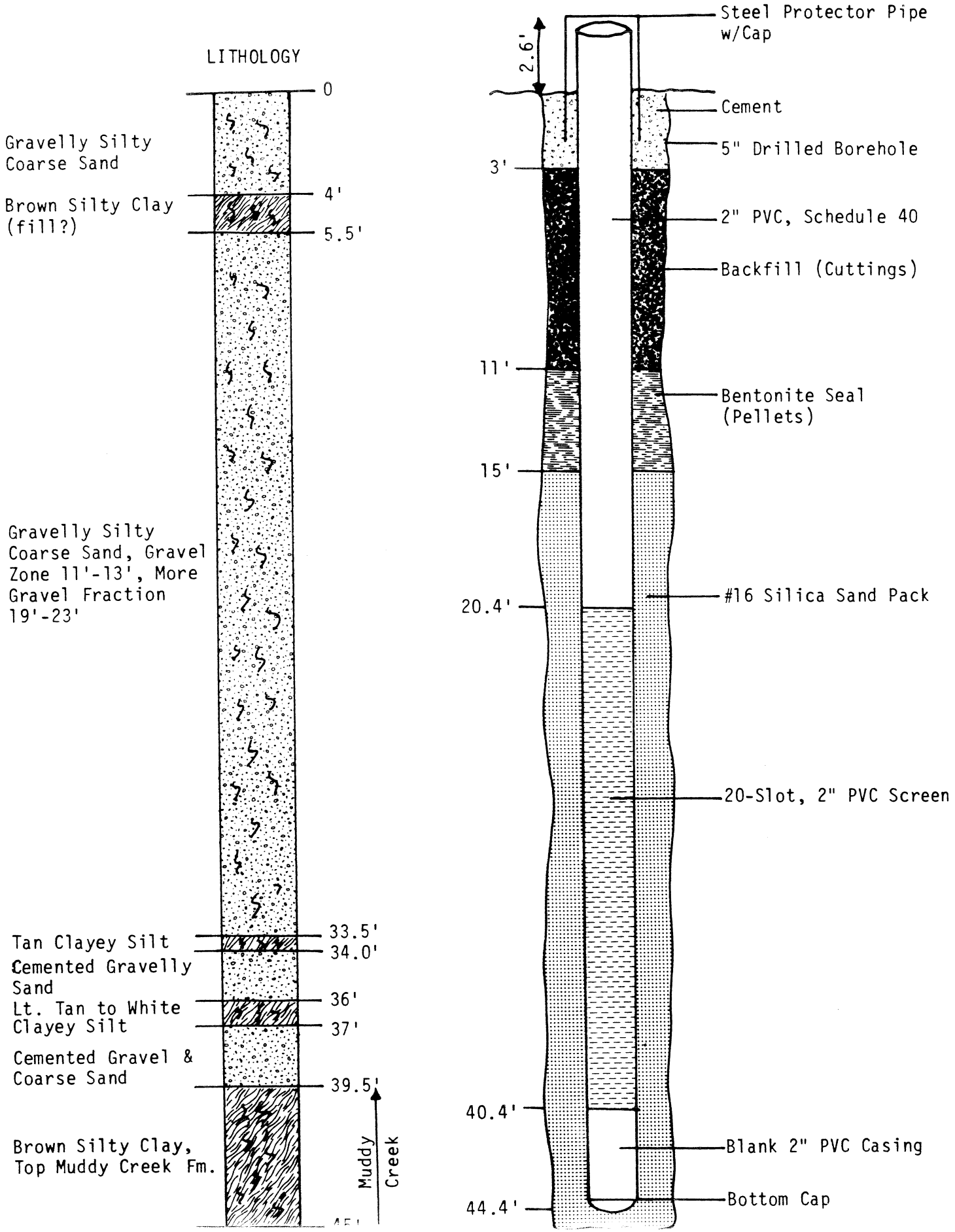

WELL CONSTRUCTION DIAGRAM

MONITOR WELL M-21

HENDERSON FACILITY

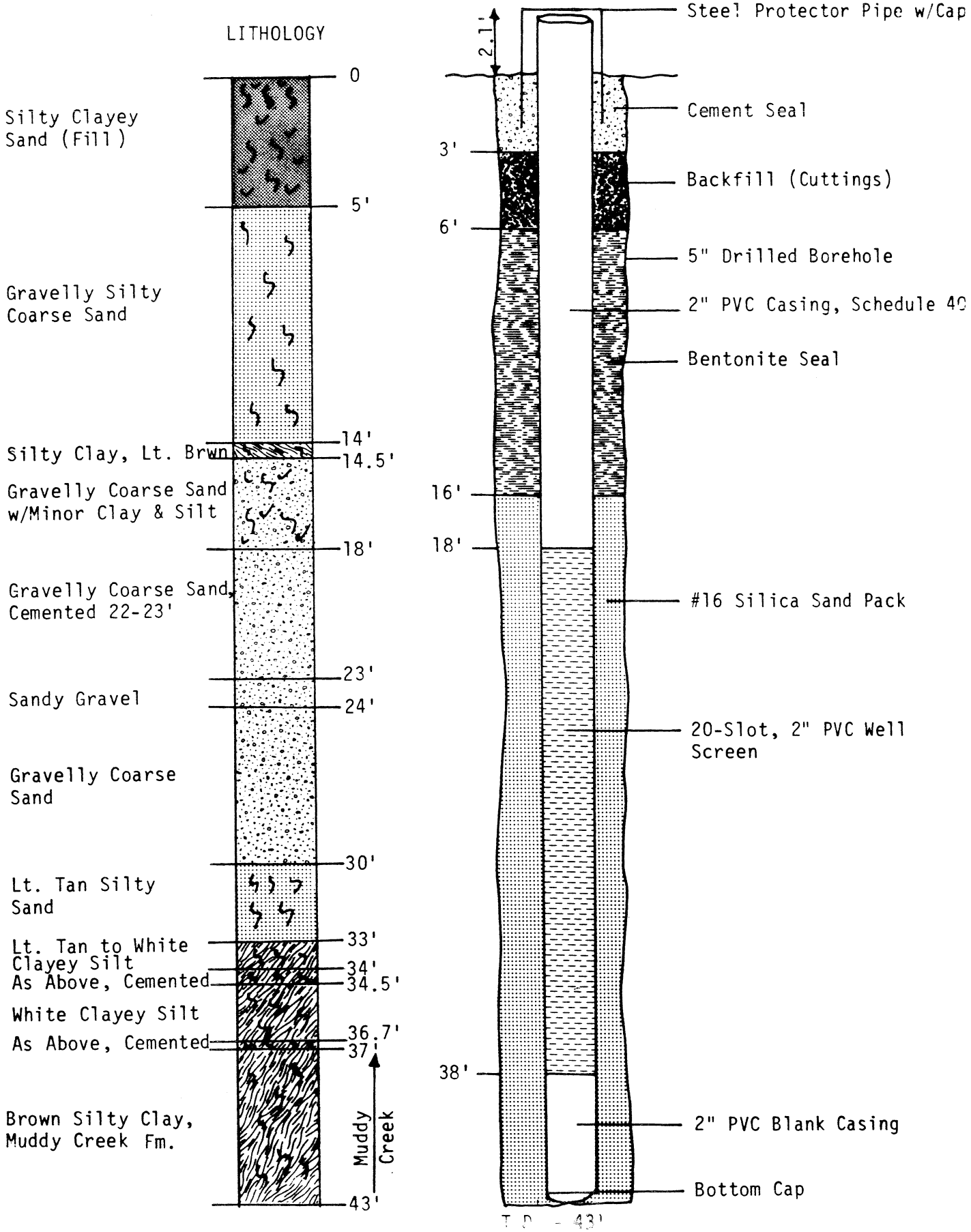

P-1A

WELL CONSTRUCTION DIAGRAM
MONITOR WELL M-22
HENDERSON FACILITY

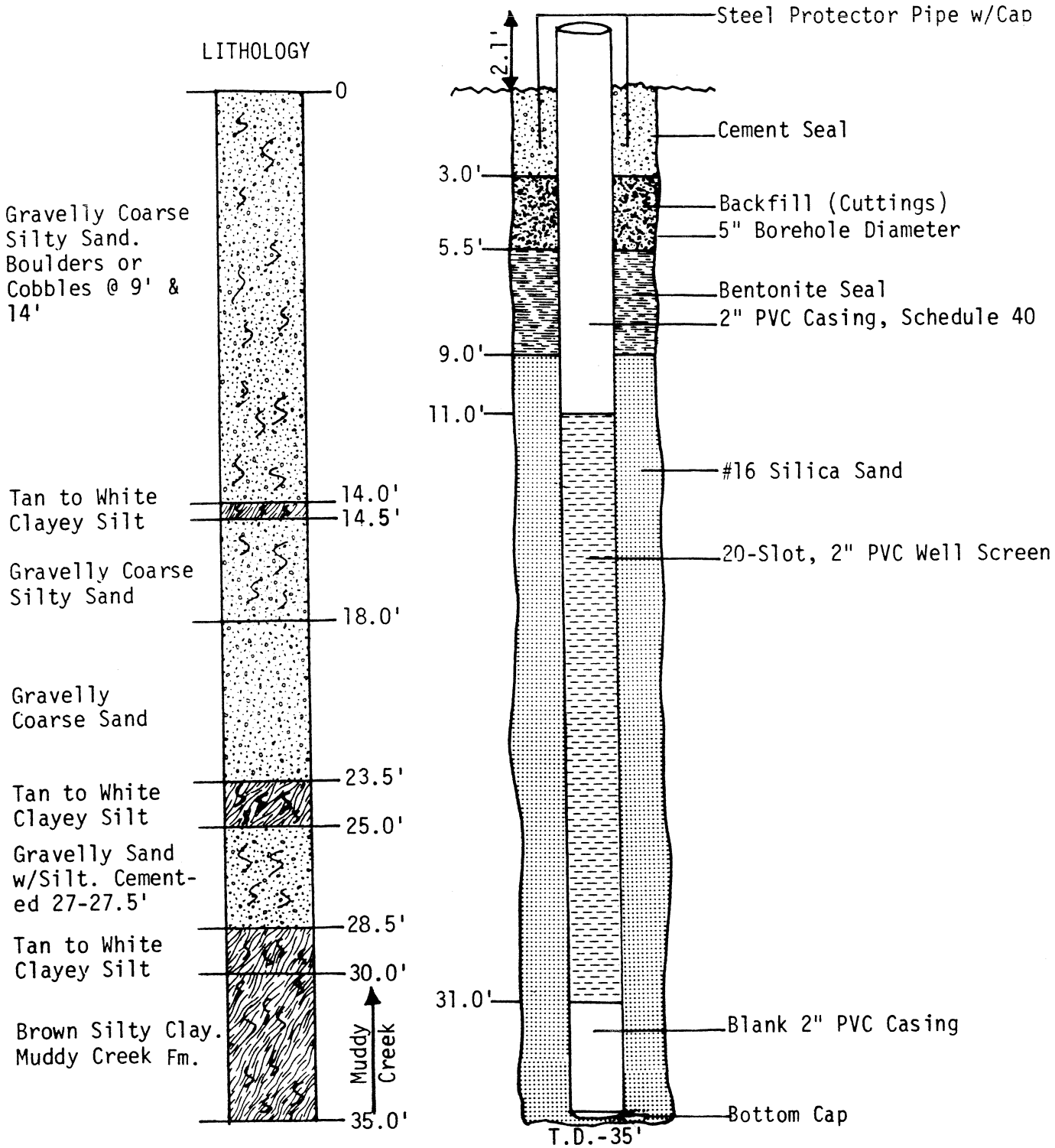

Note: Drilled 8-11-83

WELL CONSTRUCTION DIAGRAM

MONITOR WELL M-23

HENDERSON FACILITY

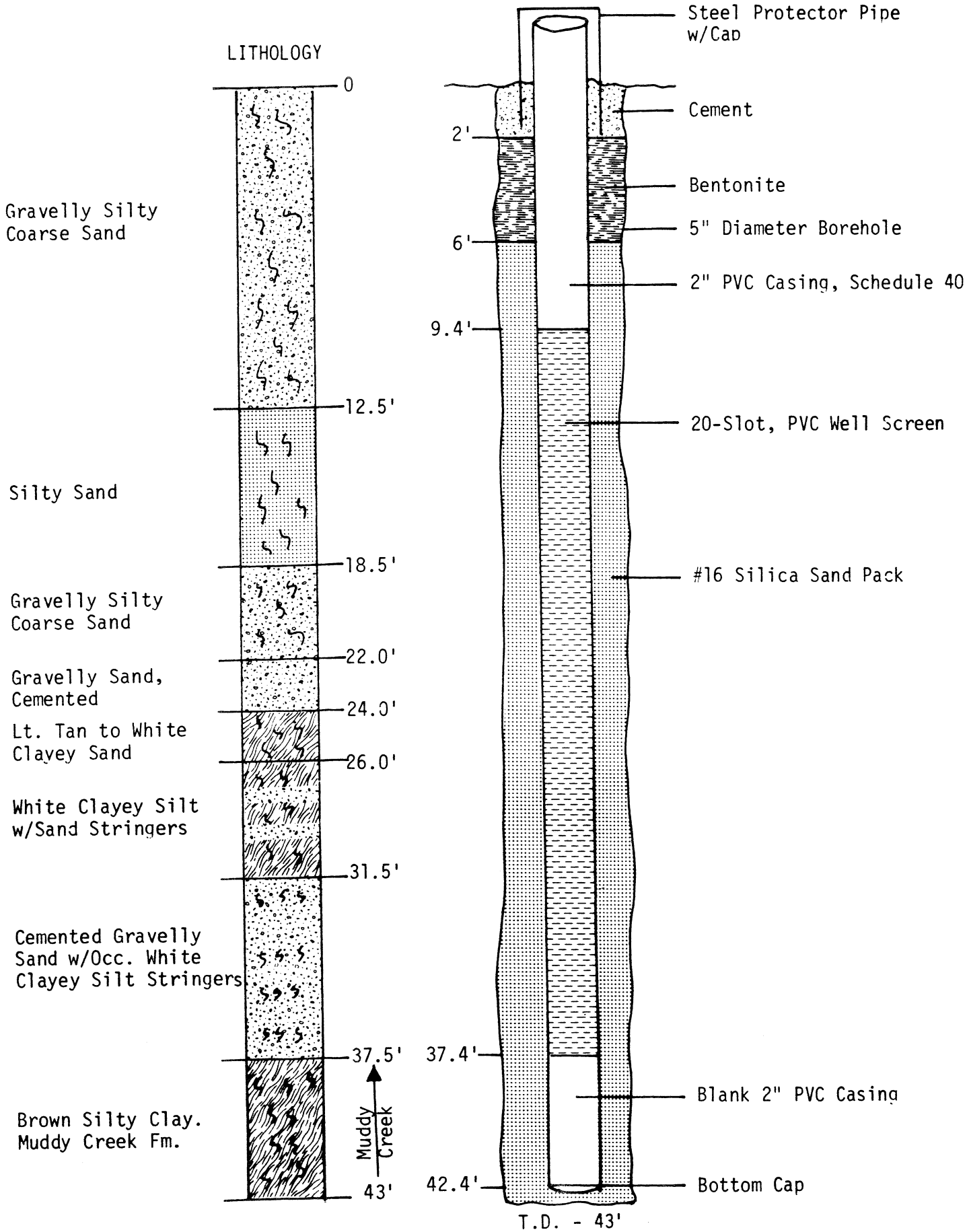

Note: Drilled 8-11-83

COMPLETION DIAGRAMS WELLS M-24 to M-27, KERR-McGEE HENDERSON FACILITY.

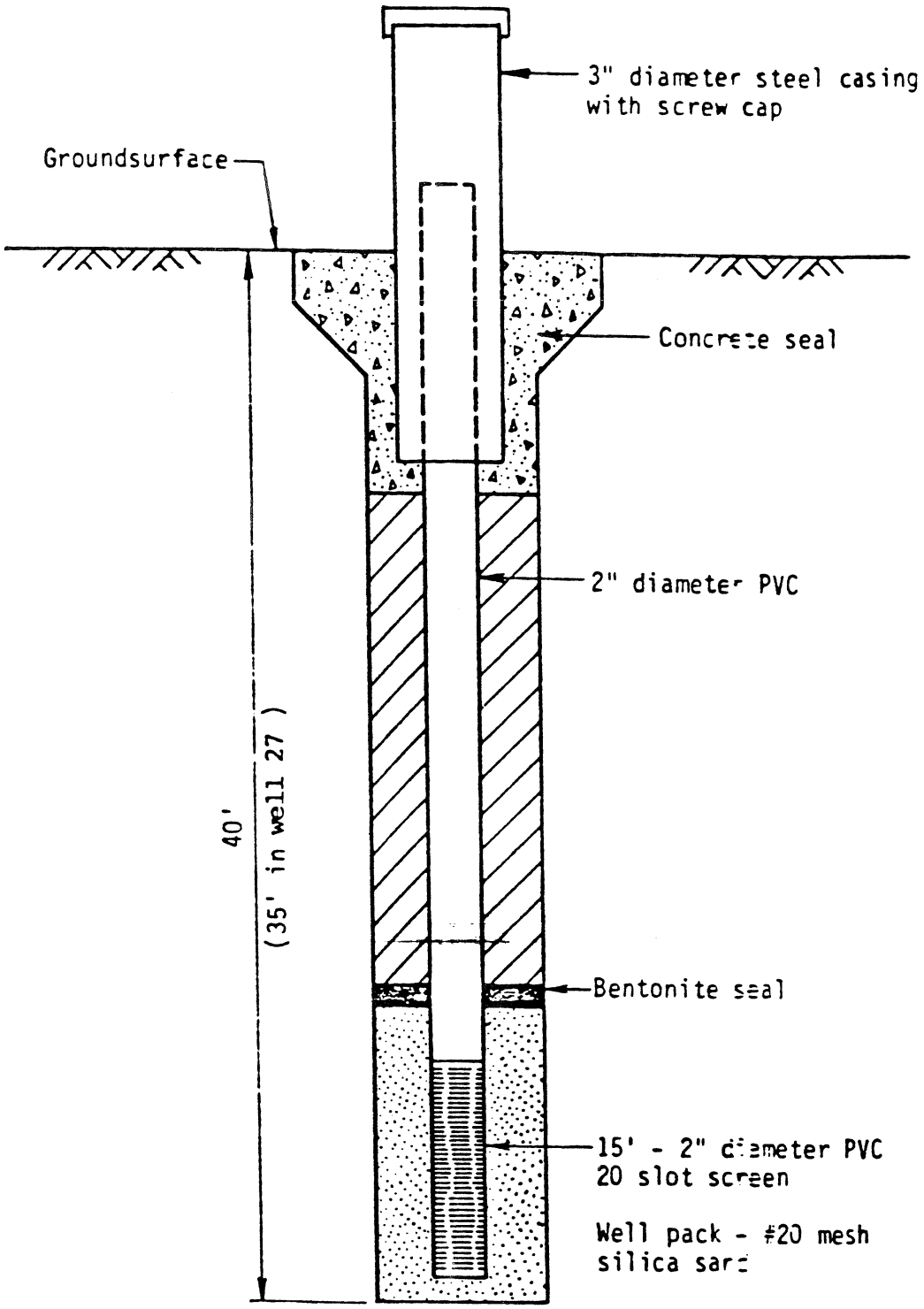

WATER SAMPLE WELL CONSTRUCTION

Project No.

84-3223

Converse Consultants Geotechnical Engineering and Applied Sciences

Figure No.

1

LOG OF WATER SAMPLE WELL 24

DATE 5/14/84

LOCATION KMCC, Henderson, NV

ELEVATION

P-1

DEPTH IN FEET	SAMPLES SYMBOL	SOIL DESCRIPTION	COLOR	MOISTURE	CONSISTENCY	REMARKS
0	SW	GRAVELLY SAND with silt	light brown	dry / slightly moist		
16	GW	SANDY GRAVEL				
18	SW/ GW	SAND & GRAVEL				
24	SW	GRAVELLY SAND				
34	SM	SILTY SAND				
36	ML	SILT (me?)				
40						

End of well at 40.0 ft.

THIS SUMMARY APPLIES ONLY AT THIS LOCATION AND AT THE TIME OF LOGGING. SUBSURFACE CONDITIONS MAY DIFFER AT OTHER LOCATIONS AND MAY CHANGE AT THIS LOCATION WITH THE PASSAGE OF TIME. THE DATA PRESENTED IS A SIMPLIFICATION OF ACTUAL CONDITIONS ENCOUNTERED.

DRAWING NO

Converse Consultants — Consulting Engineers and Geologists

LOG OF WATER SAMPLE WELL 25

DATE 5/14/84

LOCATION KMCC, Henderson, NV

ELEVATION

DEPTH IN FEET	SAMPLES	SYMBOL	SOIL DESCRIPTION	COLOR	MOISTURE	CONSISTENCY	REMARKS
0		SW	GRAVELLY SAND	light brown			
18		SW/ GW	SAND & GRAVEL	light brown & dark brown			
28		CL	SILT & CLAY				
40							

End of well at 40.0 ft.

THIS SUMMARY APPLIES ONLY AT THIS LOCATION AND AT THE TIME OF LOGGING. SUBSURFACE CONDITIONS MAY DIFFER AT OTHER LOCATIONS AND MAY CHANGE AT THIS LOCATION WITH THE PASSAGE OF TIME. THE DATA PRESENTED IS A SIMPLIFICATION OF ACTUAL CONDITIONS ENCOUNTERED.

DRAW NO

Converse Consultants — Consulting Engineers and Geologists

PROJ NO 84-3223-01

LOG OF WATER SAMPLE WELL 26

DATE 5/15/84

LOCATION KMCC, Henderson, NV

ELEVATION N/A

DEPTH IN FEET	SAMPLES SYMBOL	SOIL DESCRIPTION	COLOR	MOISTURE	CONSISTENCY	REMARKS
0	SW	GRAVELLY SAND with silt	light brown	dry		
2				slightly moist		
4				to		
6				moist		
8	GW	SANDY GRAVEL				
10	SW	GRAVELLY SAND				
12						
14						
16						
18						
20		---with trace silt, gravel varies, 15%-30% below 20'		moist		
22						
24						
26						
28				wet		
30						
32						
34						
36	CL	SILTY CLAY		very moist		
38						
40						

End of well at 40.0 ft.

THIS SUMMARY APPLIES ONLY AT THIS LOCATION AND AT THE TIME OF LOGGING. SUBSURFACE CONDITIONS MAY DIFFER AT OTHER LOCATIONS AND MAY CHANGE AT THIS LOCATION WITH THE PASSAGE OF TIME. THE DATA PRESENTED IS A SIMPLIFICATION OF ACTUAL CONDITIONS ENCOUNTERED.

DRAWING NO.

LOG OF WATER SAMPLE WELL 27

DATE 5/14/84

LOCATION KMCC, Henderson, NV

ELEVATION

DEPTH IN FEET	SAMPLES SYMBOL	SOIL DESCRIPTION	COLOR	MOISTURE	CONSISTENCY	REMARKS
0	SW	GRAVELLY SAND with trace silt	light brown	dry	loose	
2				slightly moist to moist	loose to medium dense	
4						
6						
8						
10	SW/ GW	SAND & GRAVEL 40%-60% gravel				
12						
14						
16						
18						
20	SW	GRAVELLY SAND				
22						
24						
26						
28		CALICHE	light tan			
30						
32	SW	GRAVELLY SAND	light brown			*See Note.
34						
36						
38						
40						

End of well at 40.0 ft.

Note: Hole caved to 35' when PVC was installed. Okay per Kay Brothers.

THIS SUMMARY APPLIES ONLY AT THIS LOCATION AND AT THE TIME OF LOGGING. SUBSURFACE CONDITIONS MAY DIFFER AT OTHER LOCATIONS AND MAY CHANGE AT THIS LOCATION WITH THE PASSAGE OF TIME. THE DATA PRESENTED IS A SIMPLIFICATION OF ACTUAL CONDITIONS ENCOUNTERED.

DRAWING NO

WELL COMPLETION DIAGRAM
WELL M-28, BORING 84-6
HENDERSON, NEVADA

P&A

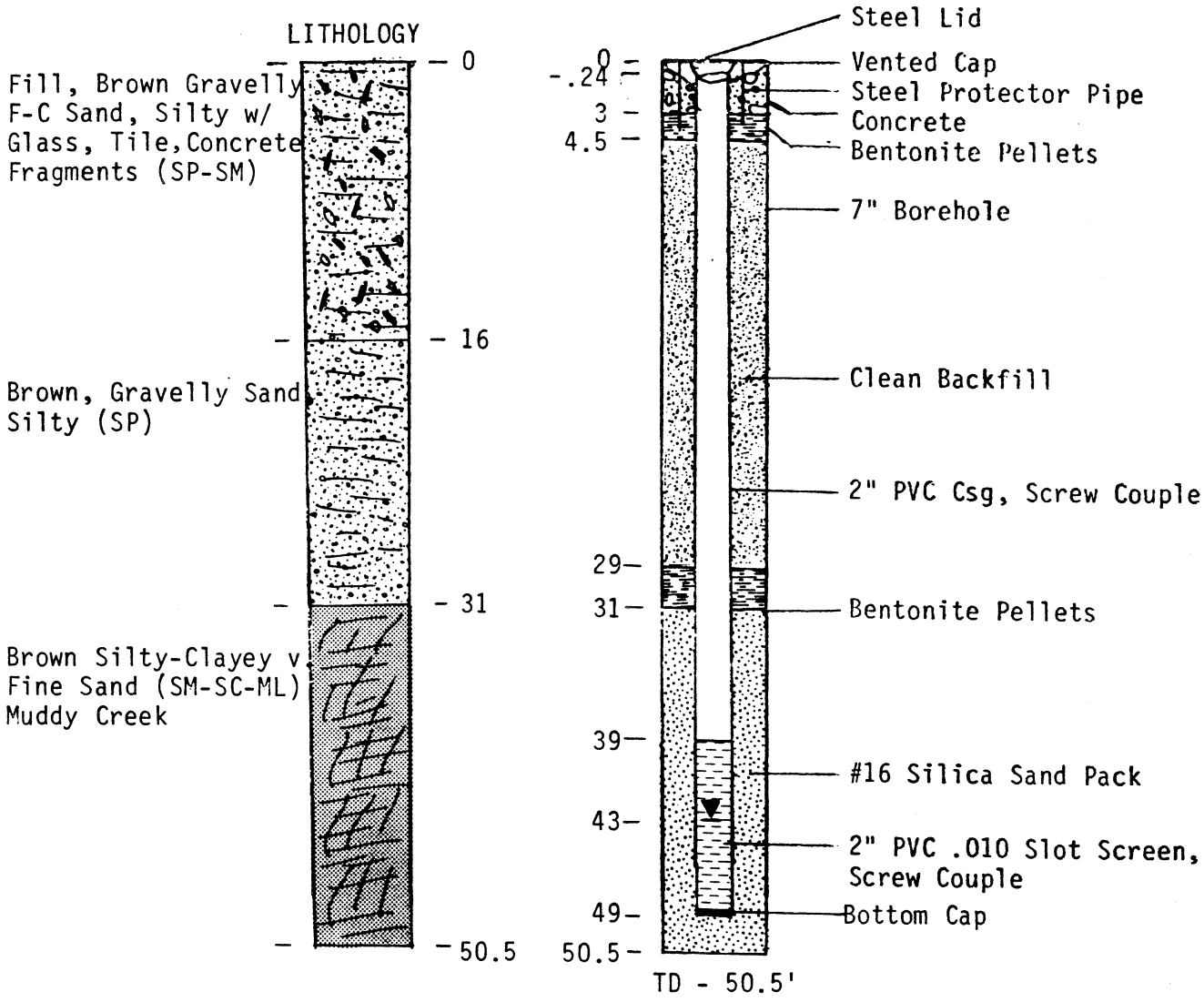

NOTE: Well For Unit 6 Heave Study

Drilled on: 7/24/84
Drilled by: Western Technologies
Logged by: Bert Smith, Kerr-McGee
Drilling Method: HSA
Casing Elevation: 1811.27 MSL

WELL CONSTRUCTION DIAGRAM
WELL M-29 (BORING 84-4)
HENDERSON, NEVADA

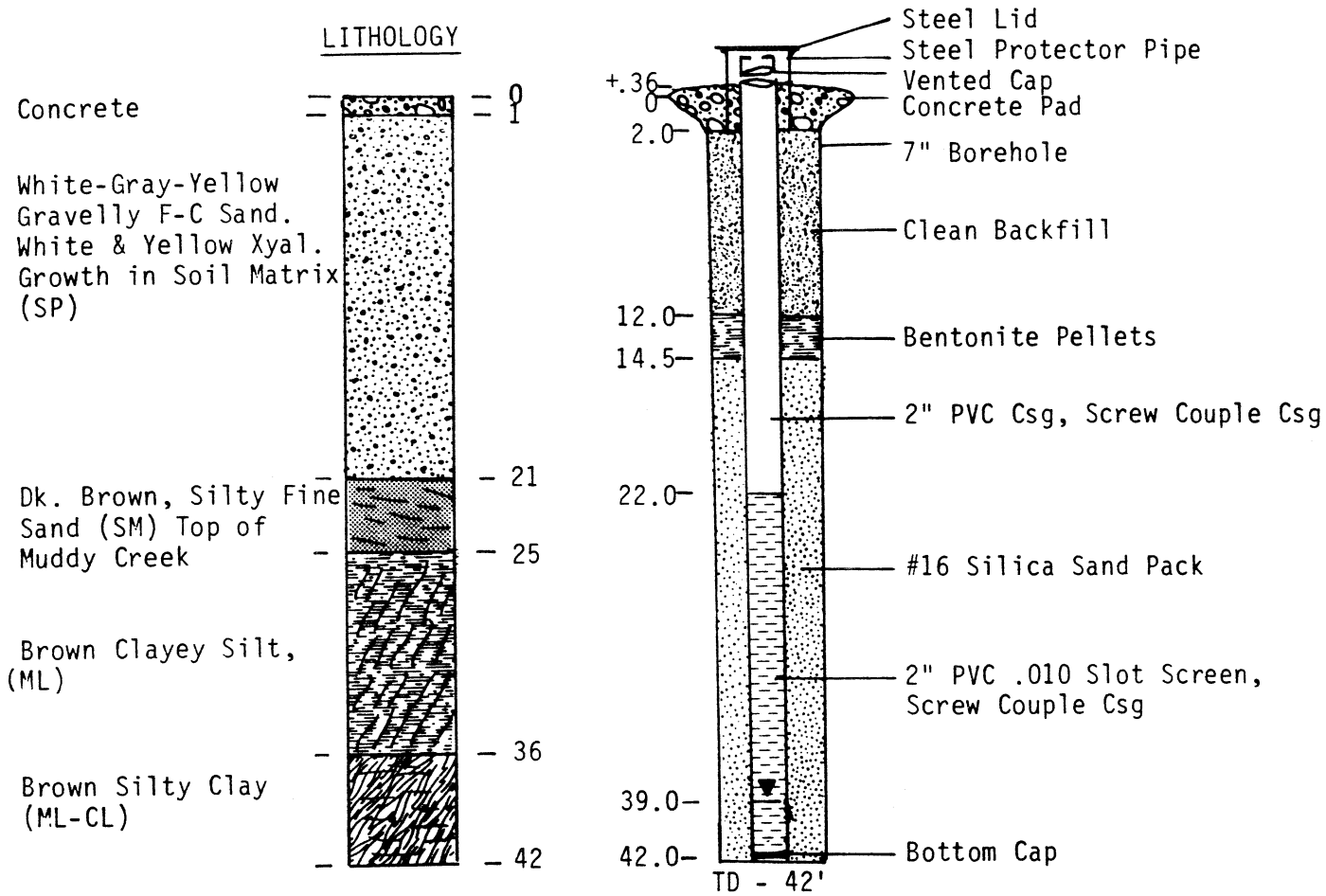

NOTE: In Basement of Unit 6. About 7.5' Below Floor Level. Well for Unit 6 Heave Study

Drilled on: 7/12/84
Drilled by: Western Technologies
Logged by: Bert Smith, Kerr-McGee
Drilling Method: HSA
Casing Elevation: 1806.60' MSL

828999.000
2671598.000
ng1816.6

WELL COMPLETION DIAGRAM
WELL M-30, BORING 84-1
HENDERSON, NEVADA

P&A

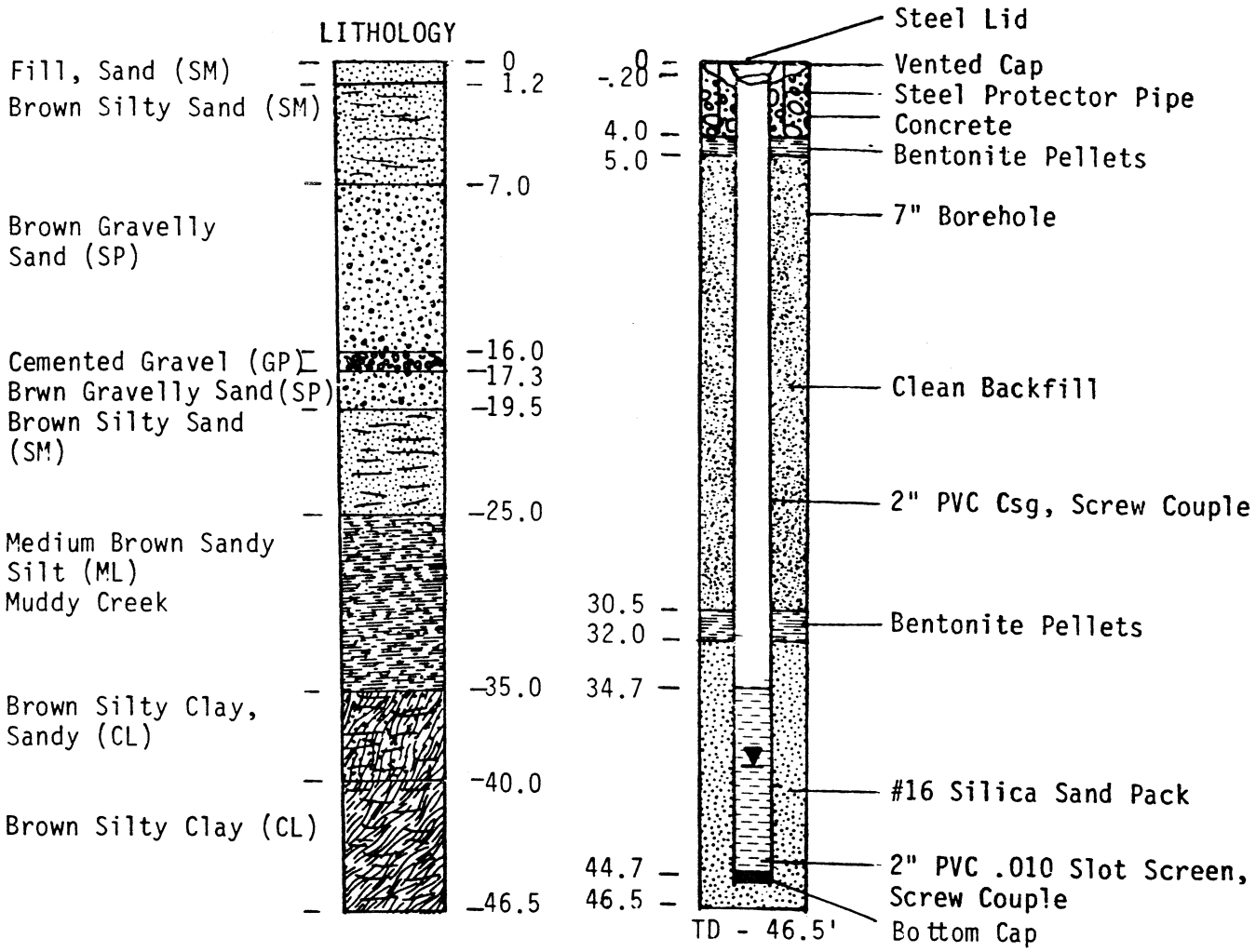

NOTE: Well For Unit 6 Heave Study

Drilled on: 7/17/84
Drilled by: Western Technologies
Logged by: Bert Smith - KM & Western Technologies
Drilling Method: HSA
Casing Elevation: 1810.68'

WELL CONSTRUCTION DIAGRAM
WELL M-31
HENDERSON, NEVADA

f-A 6/03

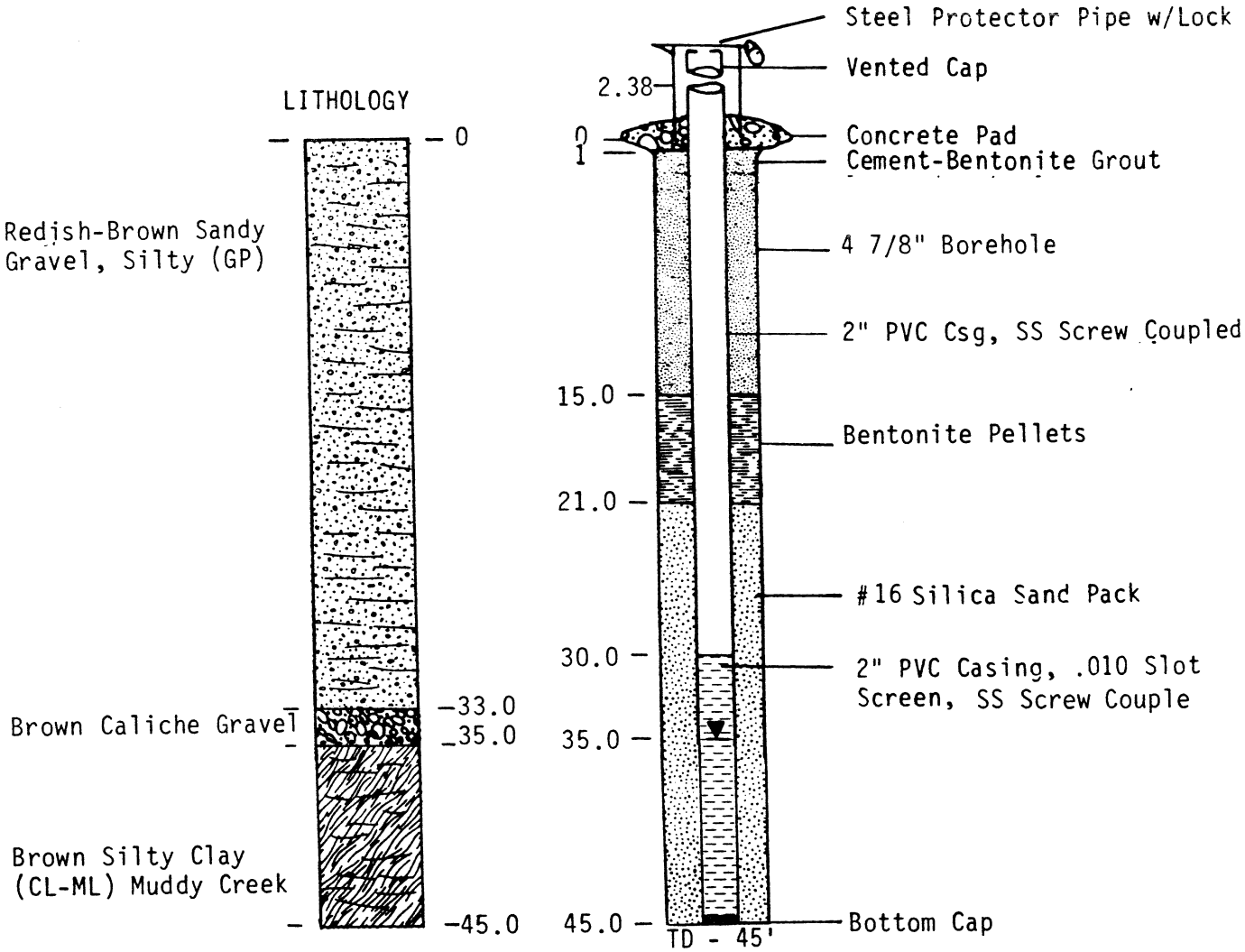

DATE DRILLED: 6/27/85
DRILLED BY: Converse Cons.
DRILLING METHOD: Rotary Wash-Water
LOGGED BY: Bert Smith, Kerr-McGee
CASING ELEVATION: 1787.92' MSL

SOIL BORING LOG KM-5655-B

KERR-McGEE CORPORATION Hydrology Dept. - S&EA Division	KM SUBSIDIARY KMCLLC	LOCATION HENDERSON, NV	BORING NUMBER M31A

DEPTH IN FEET	LITHOLOGIC DESCRIPTION	GRAPHIC LOG	UNIFIED SOIL FIELD CLASS.	BLOWS PER 6"	PID (ppm)	SOIL SAMPLE NO.	SOIL SAMPLE TYPE	SOIL SAMPLE DEPTH	SOIL SAMPLE REC.	REMARKS OR FIELD OBSERVATIONS
5	0-18' silty, gravelly SAND, light brown, vf-vc, SA 20-25% silt, 20-25% pea gravel to ½" scattered thin layers of soft caliche									
10										
15										
18										
20	18-41' silty sandy GRAVEL, brown, 20-25% silt, 20-25% vf-vc sd. Gravel up to 2" diam.									
25										
35										damp @ 35

EXPLANATION

- ▼ Water Table (24 Hour)
- ▽ Water Table (Time of Boring)
- PID Photoionization Detection (ppm)
- NO. Identifies Sample by Number
- TYPE Sample Collection Method
  - SPLIT-BARREL
  - AUGER
  - ROCK CORE
  - THIN-WALLED TUBE
  - CONTINUOUS SAMPLER
  - NO RECOVERY
- DEPTH Depth Top and Bottom of Sample
- REC. Actual Length of Recovered Sample in Feet

GRAPHIC LOG LEGEND

- CLAY
- SILT
- SAND
- GRAVEL
- SILTY CLAY
- CLAYEY SILT
- DEBRIS FILL
- HIGHLY ORGANIC (PEAT)
- SANDY CLAY
- CLAYEY SAND
- _____
- _____

DATE DRILLED	PAGE
6-18-03	1 of 2

DRILLING METHOD: HSA

DRILLED BY: ELITE DRILLING

LOGGED BY: ED KRISH

EXISTING GRADE ELEVATION (FT. AMSL)

LOCATION OR GRID COORDINATES

SOIL BORING LOG KM-5655-B

KERR-McGEE CORPORATION Hydrology Dept. - S&EA Division	KM SUBSIDIARY KMCLLC	LOCATION HENDERSON NV	BORING NUMBER M31A

DEPTH IN FEET	LITHOLOGIC DESCRIPTION	GRAPHIC LOG	UNIFIED SOIL FIELD CLASS.	BLOWS PER 6"	PID (ppm)	SOIL SAMPLE NO.	SOIL SAMPLE TYPE	SOIL SAMPLE DEPTH	SOIL SAMPLE REC.	REMARKS OR FIELD OBSERVATIONS
41	41-43 Calcified gravel zone. Semi-hard									
43										Muddy Ck @ 43'
45	43-55 dry SILT, brown, w/ minor silty CLAY									WET @ 48'
50										
55	TD 55									

EXPLANATION

- ▼ Water Table (24 Hour)
- ▽ Water Table (Time of Boring)
- PID Photoionization Detection (ppm)
- NO. Identifies Sample by Number
- TYPE Sample Collection Method

SPLIT-BARREL; AUGER; ROCK CORE; THIN-WALLED TUBE; CONTINUOUS SAMPLER; NO RECOVERY

DEPTH Depth Top and Bottom of Sample
REC. Actual Length of Recovered Sample in Feet

GRAPHIC LOG LEGEND

CLAY; SILT; SAND; GRAVEL; SILTY CLAY; CLAYEY SILT; DEBRIS FILL; HIGHLY ORGANIC (PEAT); SANDY CLAY; CLAYEY SAND; _____; _____

DATE DRILLED	PAGE
6-18-03	2 of 2

DRILLING METHOD: HSA

DRILLED BY: ELITE DRILLING

LOGGED BY: ED KRISH

EXISTING GRADE ELEVATION (FT. AMSL)

LOCATION OR GRID COORDINATES

KERR-McGEE CORPORATION
HYDROLOGY DEPARTMENT
MONITORING WELL INSTALLATION DIAGRAM

FLUSH MOUNT

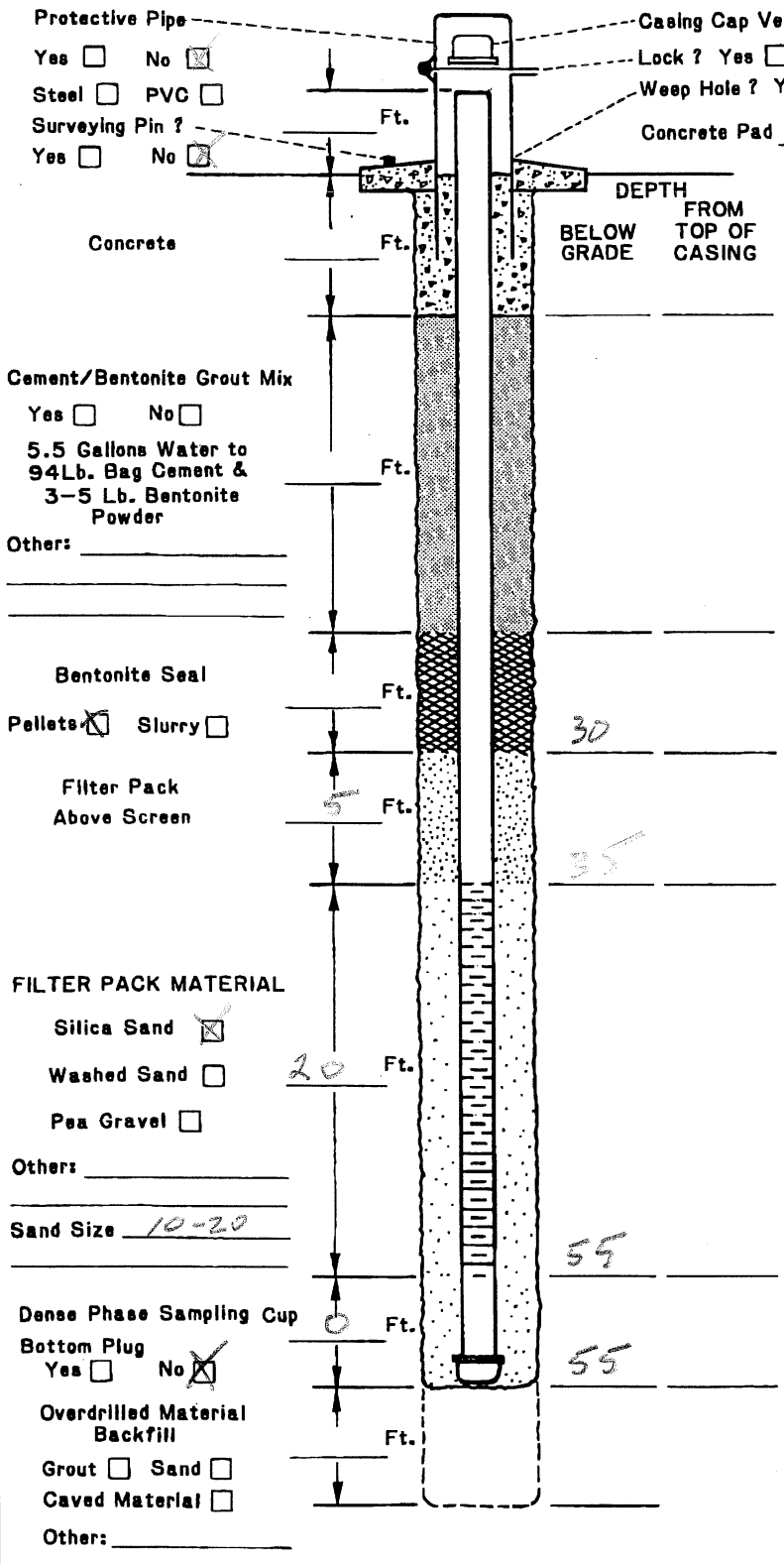

DRILLING INFORMATION:

1. Borehole Diameter= 9 Inches.
2. Were Drilling Additives Used ? Yes ☐ No ☒
   Revert ☐ Bentonite ☐ Water ☐
   Solid Auger ☐ Hollow Stem Auger ☐
3. Was Outer Steel Casing Used ? Yes ☐ No ☒
   Depth= ____ to ____ Feet.
4. Borehole Diameter for Outer Casing ____ Inches.

WELL CONSTRUCTION INFORMATION:

1. Type of Casing: PVC ☒ Galvanized ☐ Teflon ☐
   Stainless ☐ Other ____
2. Type of Casing Joints: Screw-Couple ☒ Glue-Couple ☐ Other ____
3. Type of Well Screen: PVC ☒ Galvanized ☐
   Stainless ☐ Teflon ☐ Other ____
4. Diameter of Casing and Well Screen:
   Casing 2 Inches, Screen 2 Inches.
5. Slot Size of Screen: .020
6. Type of Screen Perforation: Factory Slotted ☒
   Hacksaw ☐ Drilled ☐ Other ____
7. Installed Protector Pipe w/Lock: Yes ☐ No ☒

WELL DEVELOPMENT INFORMATION:

1. How was Well Developed ? Bailing ☐ Pumping ☐
   Air Surging (Air or Nitrogen) ☐ Other ____
2. Time Spent on Well Development ?
   ____/____ Minutes/Hours
3. Approximate Water Volume Removed ? ____ Gallons
4. Water Clarity Before Development ? Clear ☐
   Turbid ☐ Opaque ☐
5. Water Clarity After Development ? Clear ☐
   Turbid ☐ Opaque ☐
6. Did Water have Odor ? Yes ☐ No ☐
   If Yes, Describe ____
7. Did Water have any Color ? Yes ☐ No ☐
   If Yes , Describe ____

WATER LEVEL INFORMATION:

Water Level Summary (From Top of Casing)

During Drilling ____ Ft. Date ____
Before Development 46.10 Ft. Date 6-19-03
After Development ____ Ft. Date ____

Driller/Firm TENV/ELITE DRLG Drill Rig Type CME 75 Date Installed 6-18-03

Drill Crew Tom/Chris Well No. M31A Kerr-McGee Hydrologist ED KRAVI

WELL CONSTRUCTION DIAGRAM
WELL M-32
HENDERSON, NEVADA

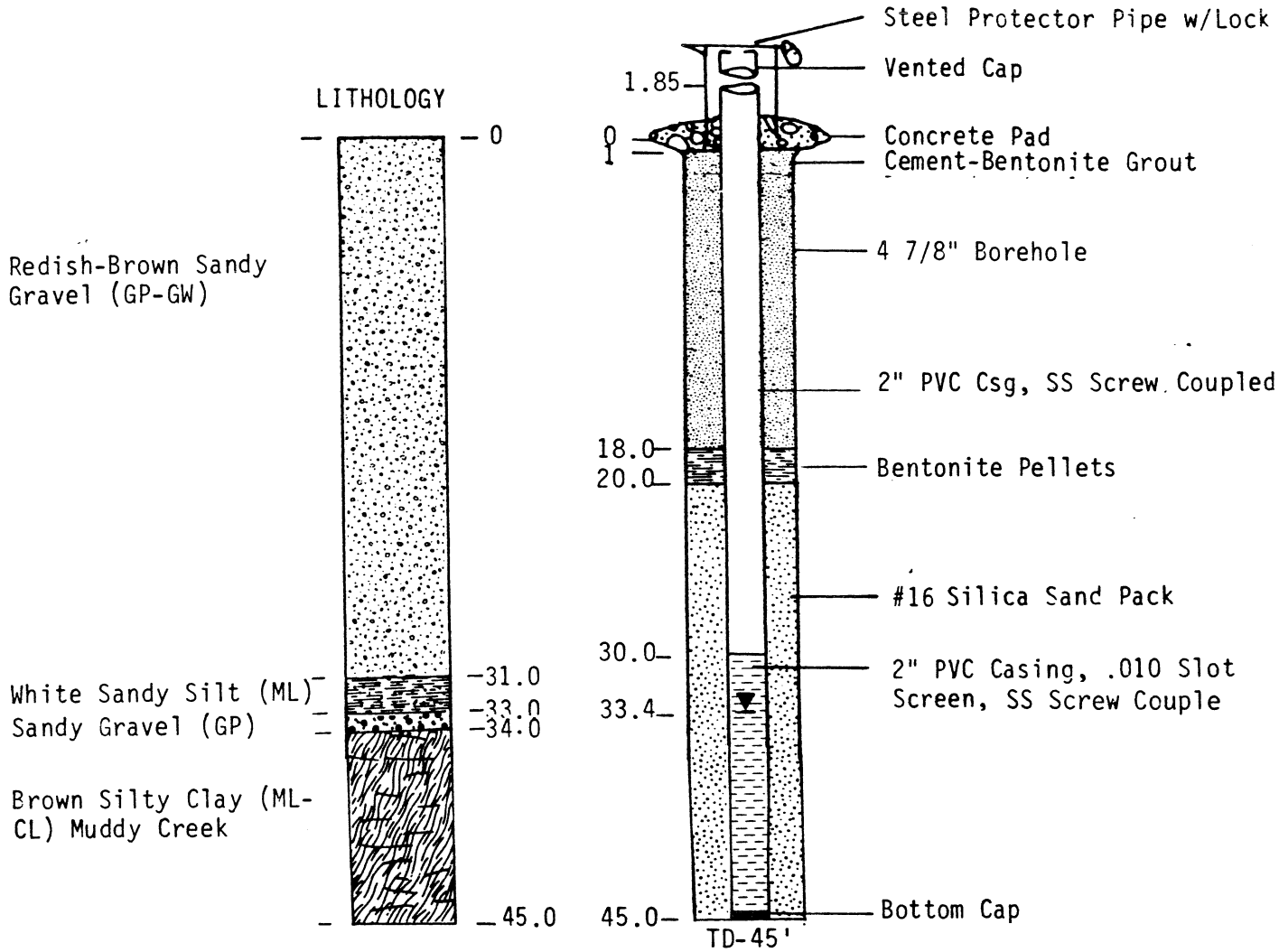

DATE DRILLED: 6/27/85
DRILLED BY: Converse Cons.
DRILLING METHOD: Rotary Wash-Water
LOGGED BY: Bert Smith, Kerr-McGee
CASING ELEVATION: 1787.48' MSL

WELL CONSTRUCTION DIAGRAM
WELL M-33
HENDERSON, NEVADA

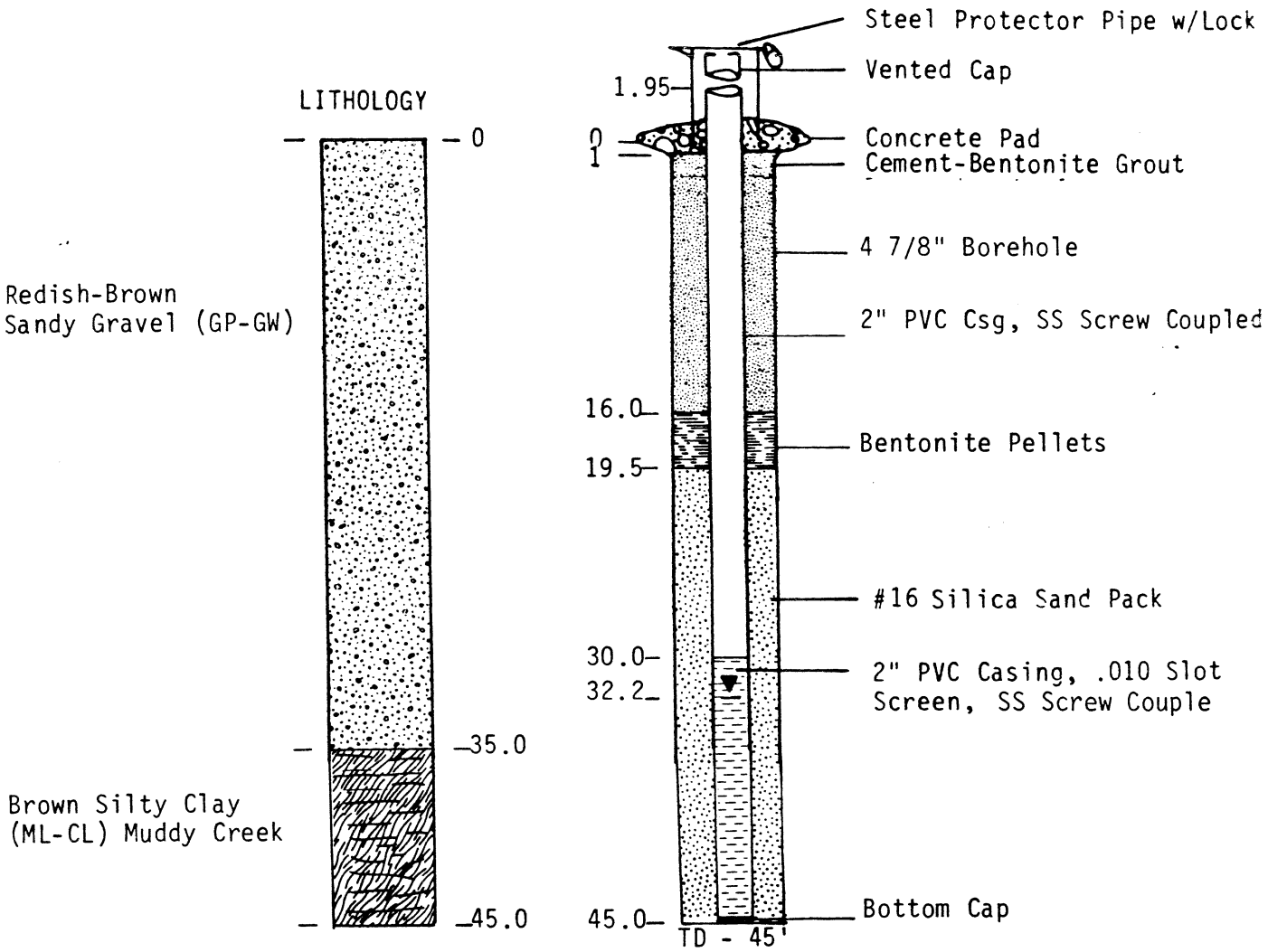

DATE DRILLED: 6/27/85
DRILLED BY: Converse Cons.
DRILLING METHOD: Rotary Wash - Water
LOGGED BY: Bert Smith, Kerr-McGee
CASING ELEVATION: 1786.98' MSL

WELL CONSTRUCTION DIAGRAM
WELL M-34
HENDERSON, NEVADA

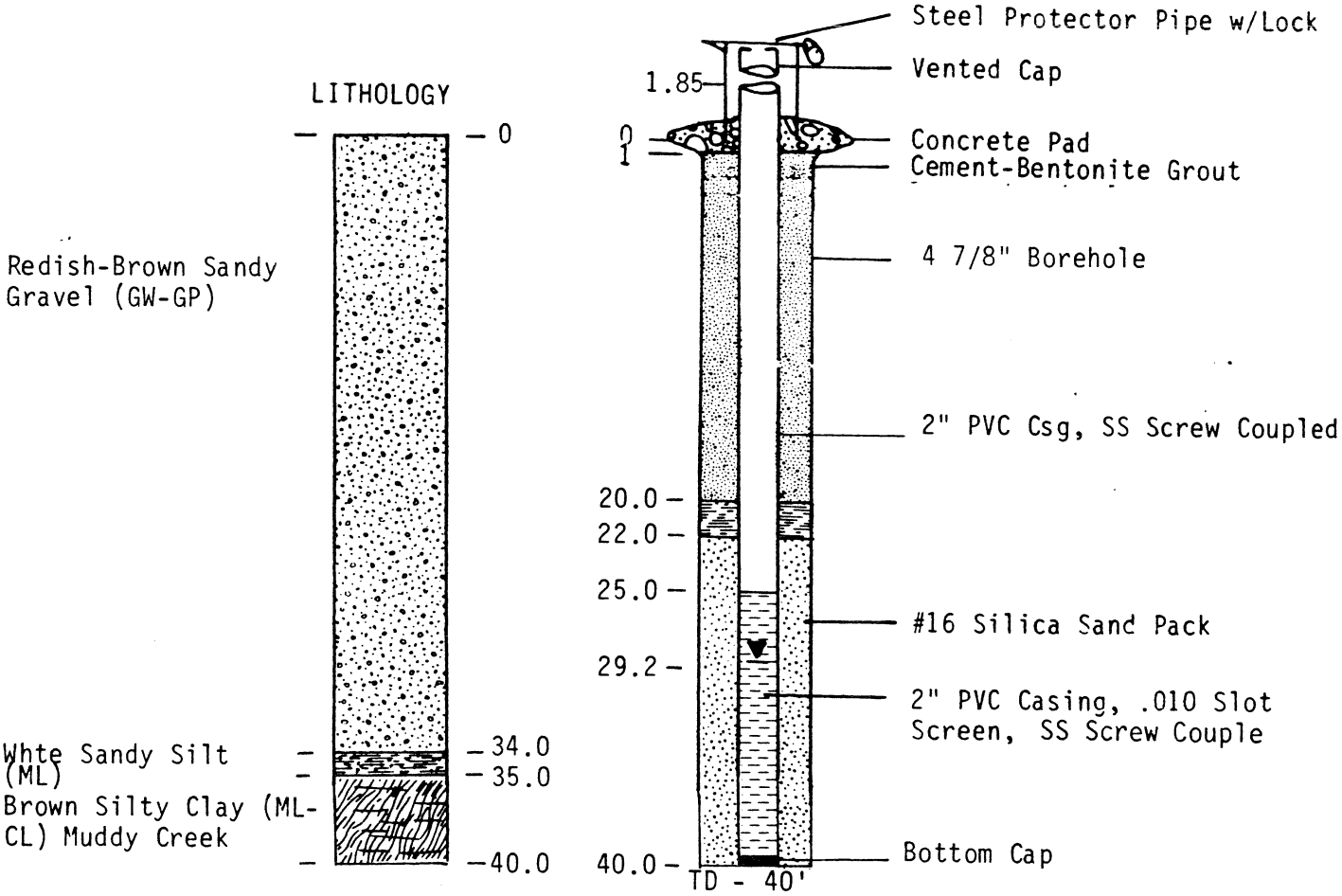

DATE DRILLED: 6/28/85
DRILLED BY: Converse Cons.
DRILLING METHOD: Rotary Wash-Water
LOGGED BY: Bert Smith, Kerr-McGee
CASING ELEVATION: 1776.10' MSL

WELL CONSTRUCTION DIAGRAM
WELL M-35
HENDERSON, NEVADA

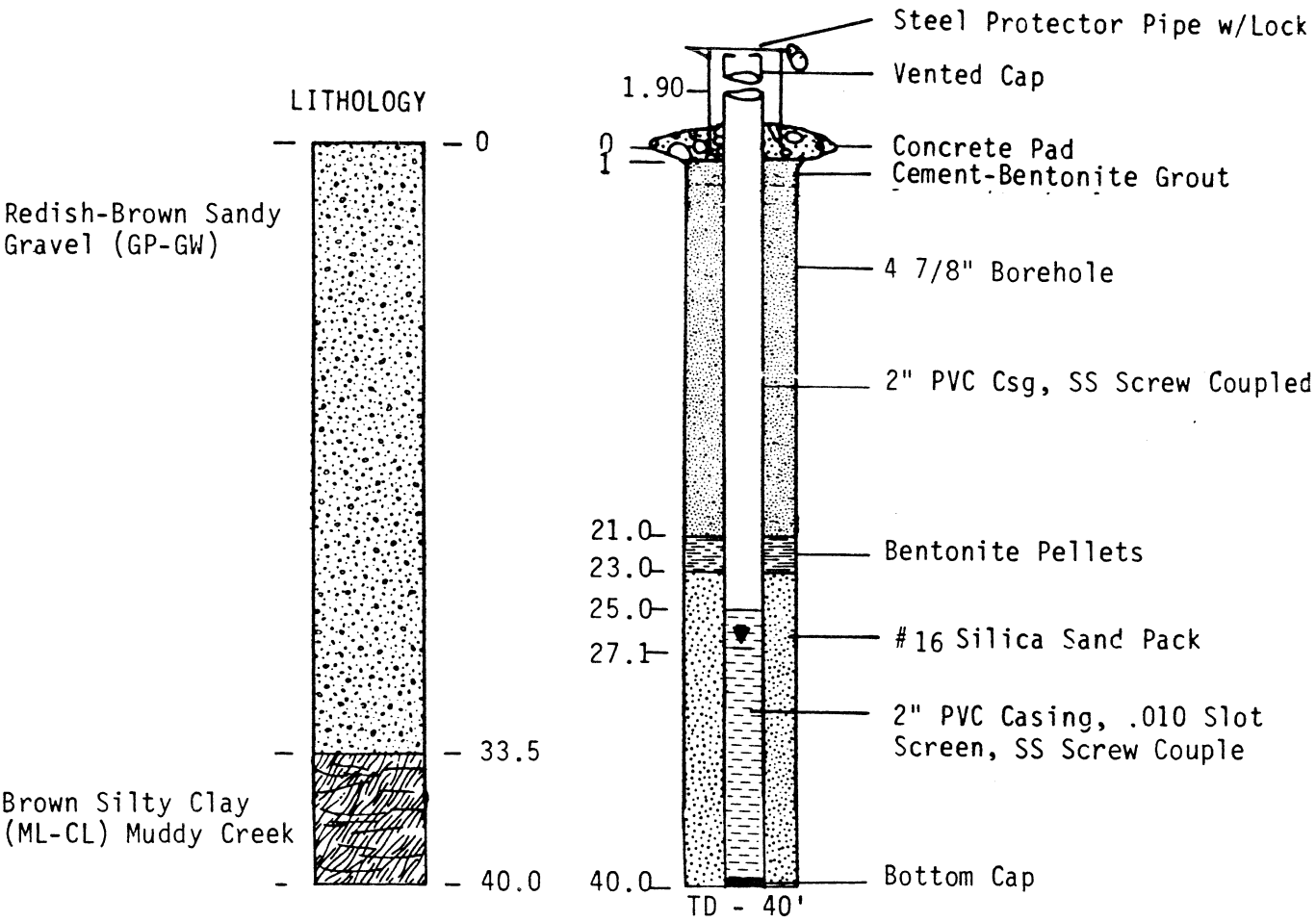

DATE DRILLED: 6/28/85
DRILLED BY: Converse Cons.
DRILLING METHOD: Rotary Wash-Water
LOGGED BY: Bert Smith, Kerr-McGee
CASING ELEVATION: 1775.01' MSL

WELL CONSTRUCTION DIAGRAM
WELL M-36
HENDERSON, NEVADA

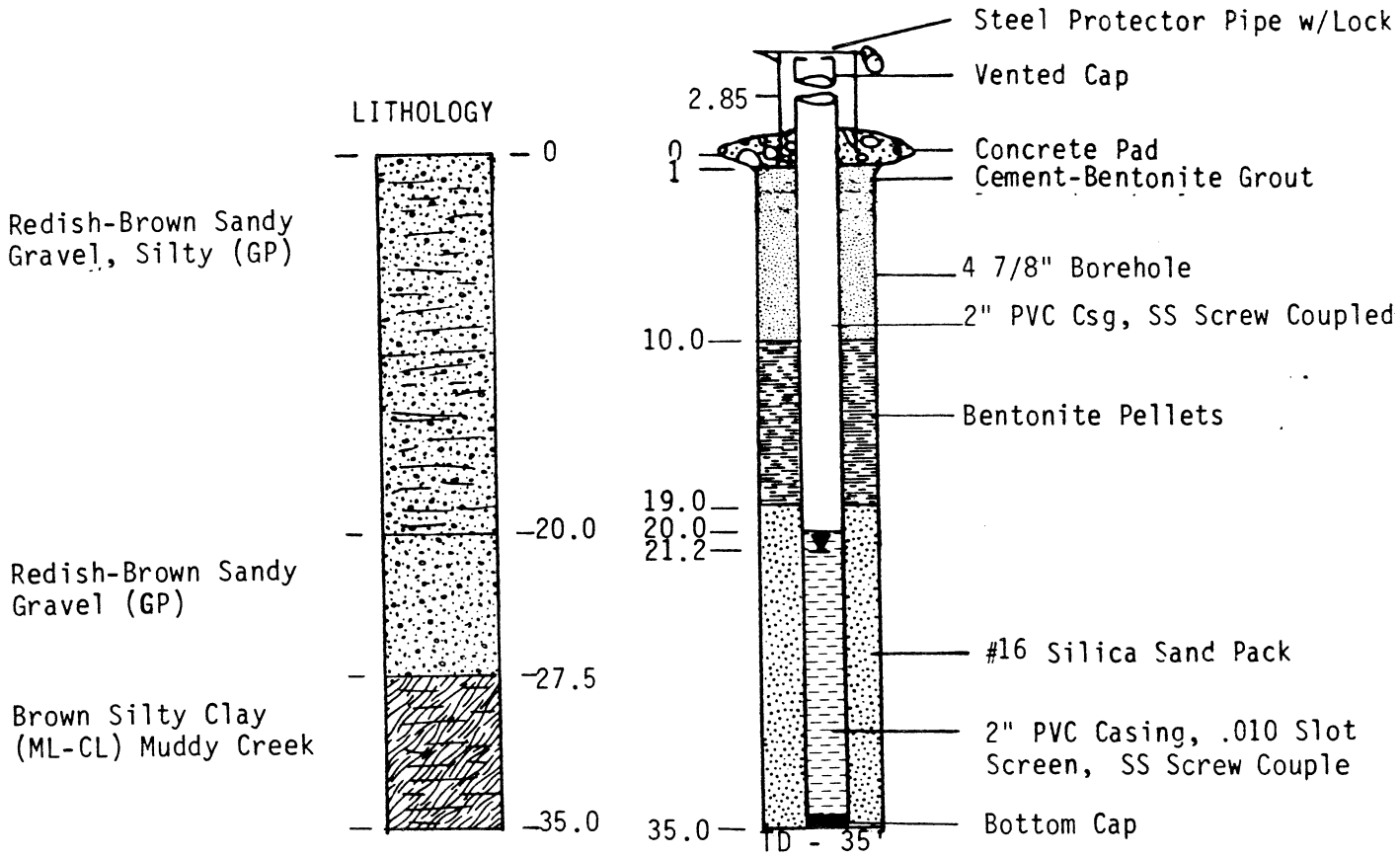

DATE DRILLED: 6/26/85
DRILLED BY: Converse Cons.
DRILLING METHOD: Rotary Wash-Water
LOGGED BY: Bert Smith, Kerr-McGee
CASING ELEVATION: 1758.88' MSL

WELL CONSTRUCTION DIAGRAM
WELL M-37
HENDERSON, NEVADA

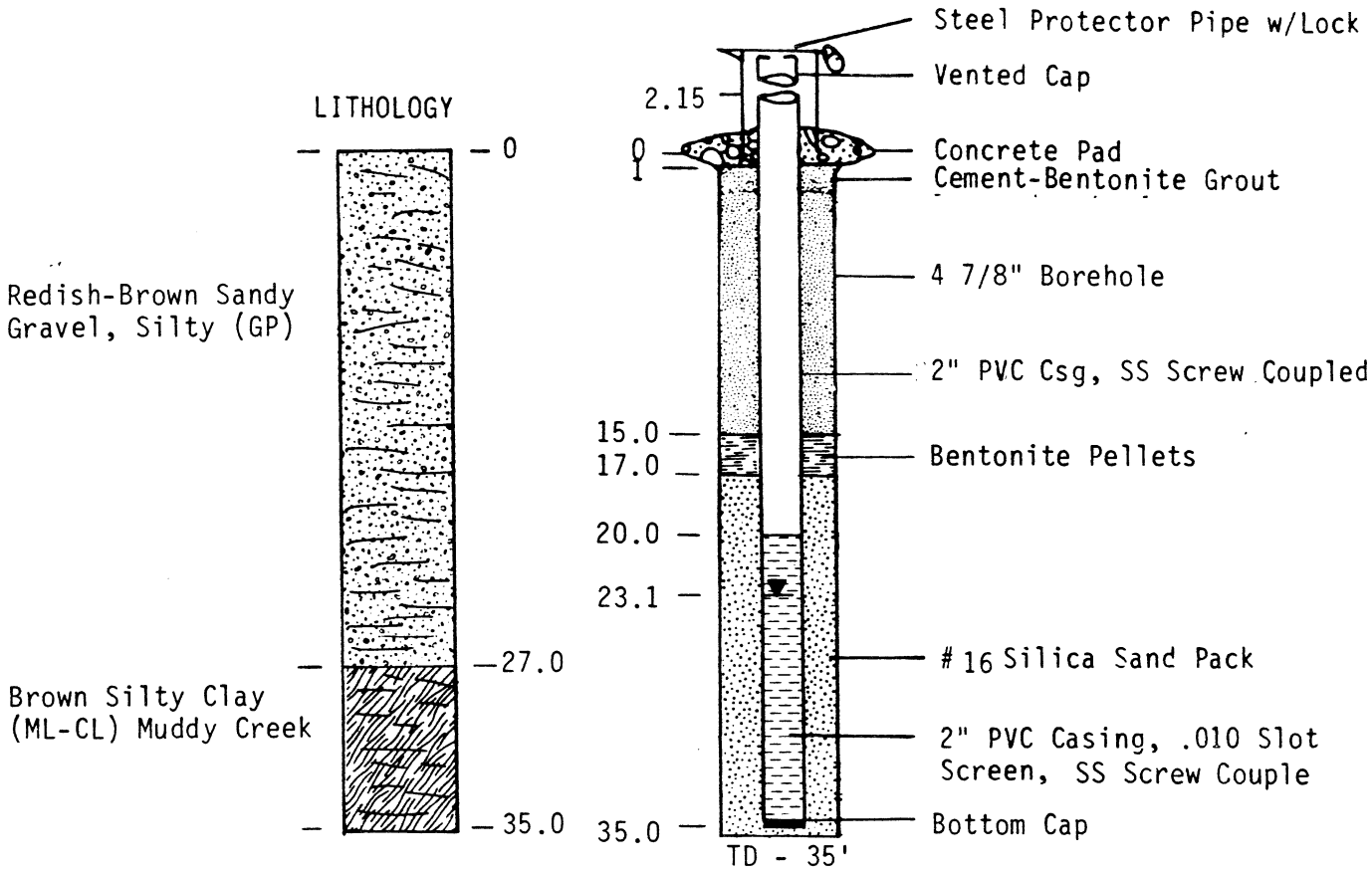

DATE DRILLED: 6/28/85
DRILLED BY: Converse Cons.
DRILLING METHOD: Rotary Wash - Water
LOGGED BY: Bert Smith, Kerr-McGee
CASING ELEVATION: 1759.58' MSL

WELL CONSTRUCTION DIAGRAM
WELL M-38
HENDERSON, NEVADA

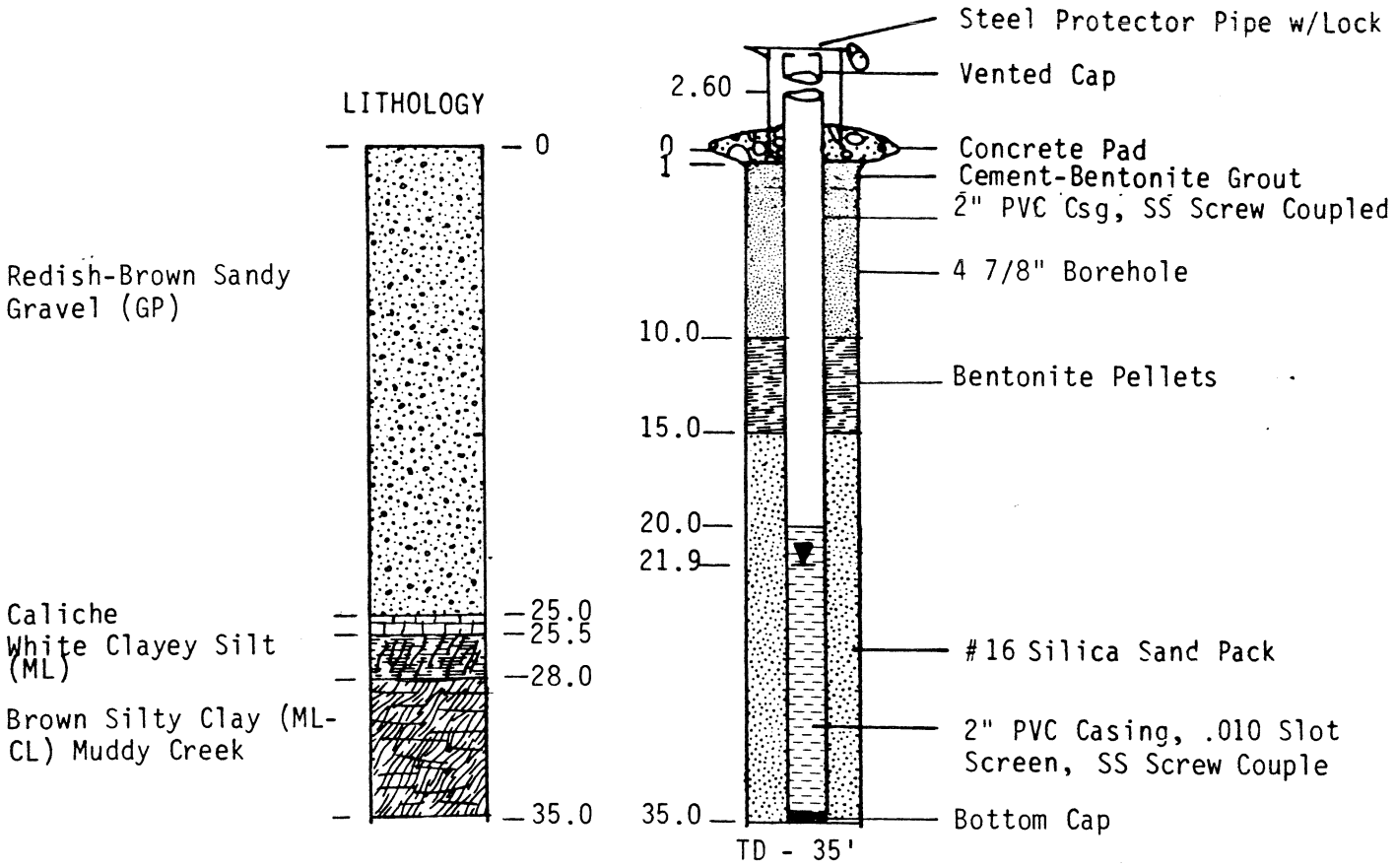

DATE DRILLED: 6/26/85
DRILLED BY: Converse Cons.
DRILLING METHOD: Rotary Wash - Water
LOGGED BY: Bert Smith, Kerr-McGee
CASING ELEVATION: 1759.08' MSL

WELL CONSTRUCTION DIAGRAM
WELL M-39
HENDERSON, NEVADA

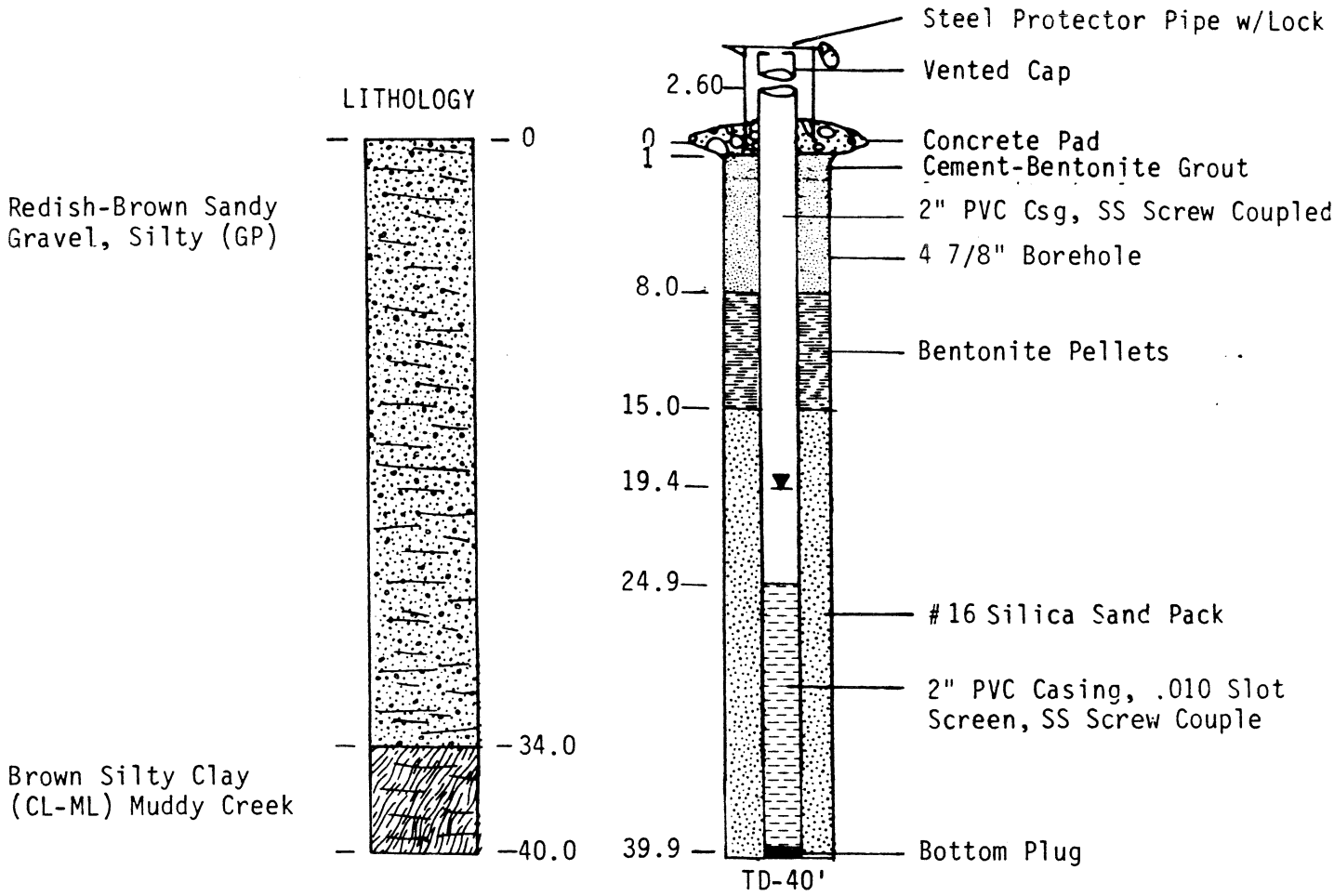

DATE DRILLED: 6/26/85
DRILLED BY: Converse Cons.
DRILLING METHOD:Rotary Wash-Water
LOGGED BY: Bert Smith, Kerr-McGee
CASING ELEVATION: 1760.22' MSL

WELL CONSTRUCTION DIAGRAM
WELL M-40
HENDERSON, NEVADA

P-A

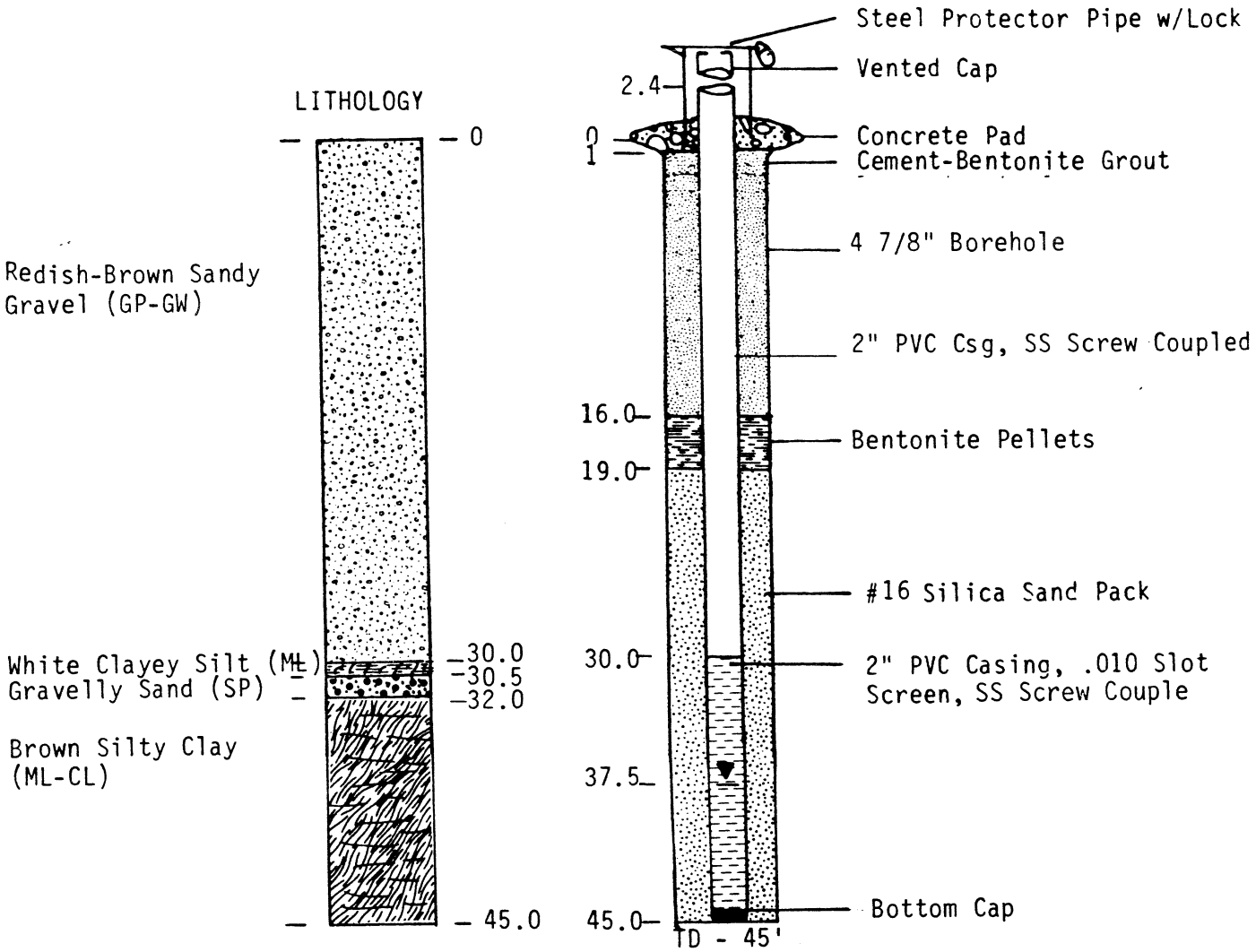

DATE DRILLED: 6/27/85
DRILLED BY: Converse Cons.
DRILLING METHOD: Rotary Wash, Water
LOGGED BY: Bert Smith, Kerr-McGee
CASING ELEVATION: 1797.89' MSL

WELL CONSTRUCTION DIAGRAM
WELL M-41
HENDERSON, NEVADA

P:A

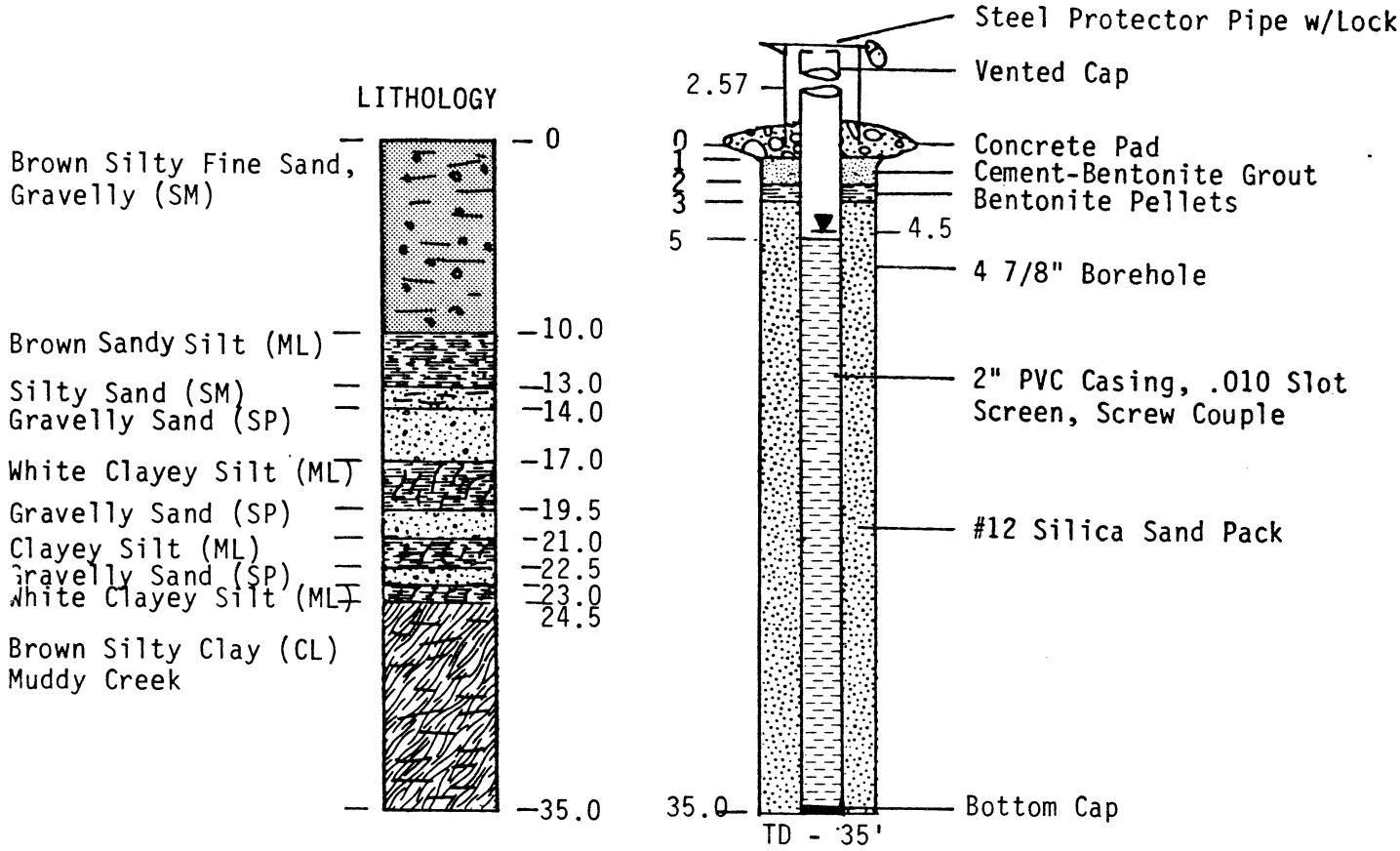

DATE DRILLED: 7/31/85
DRILLED BY: Kleinfelder & Assoc.
DRILLING METHOD: Rotary Wash, Polycore
LOGGED BY: Bert Smith, Kerr-McGee
CASING ELEVATION: 1696.60' MSL

WELL CONSTRUCTION DIAGRAM
WELL M-42
HENDERSON, NEVADA

P&A

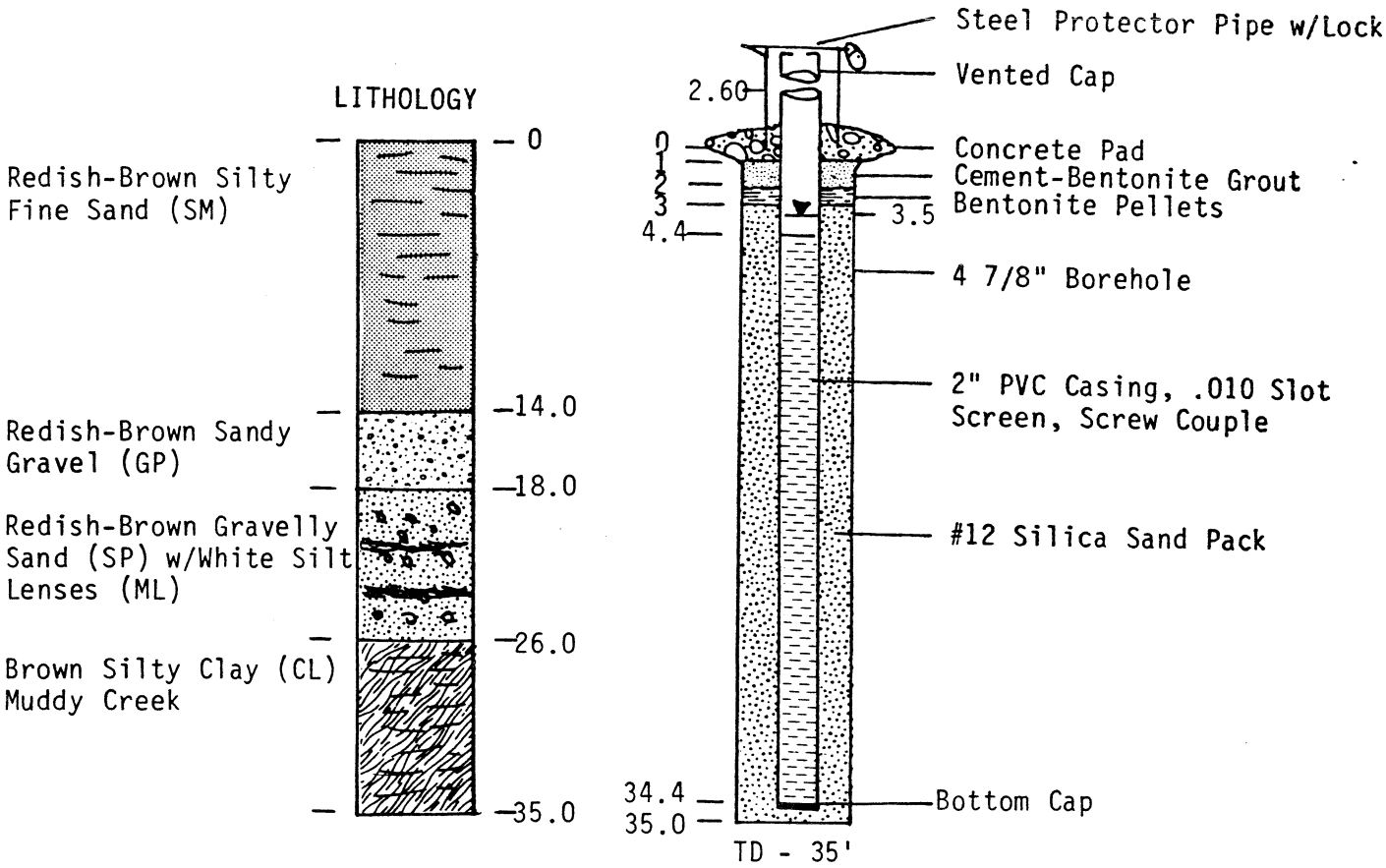

DATE DRILLED: 7/31/85
DRILLED BY: Kleinfelder & Assoc.
DRILLING METHOD: Rotary Wash, Polycore
LOGGED BY: Bert Smith, Kerr-McGee
CASING ELEVATION: 1696.24' MSL

WELL CONSTRUCTION DIAGRAM
WELL M-43
HENDERSON, NEVADA

P&A

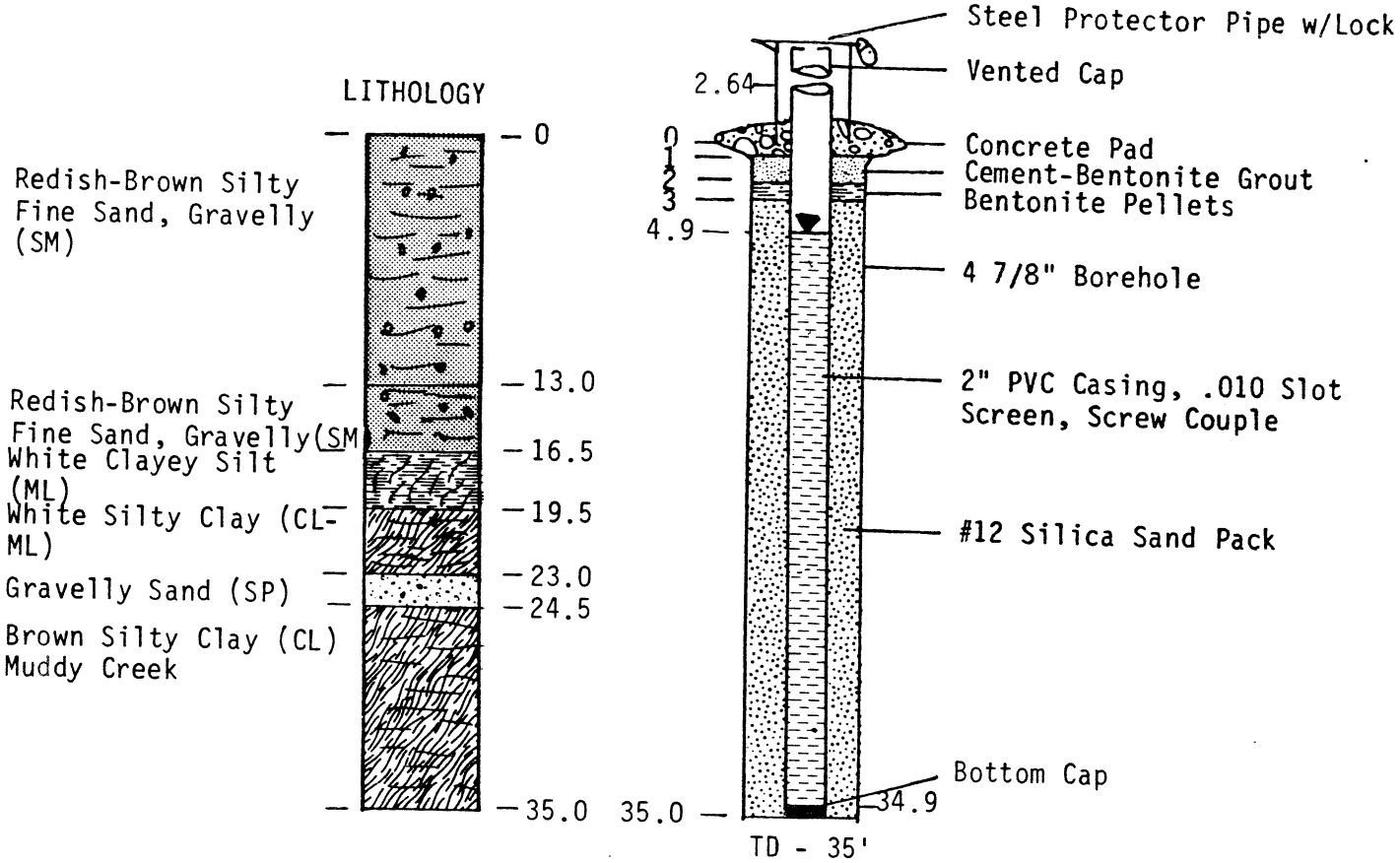

DATE DRILLED: 7/31/85
DRILLED BY: Kleinfelder & Assoc.
DRILLING METHOD: Rotary Wash, Polycore
LOGGED BY: Bert Smith, Kerr-McGee
CASING ELEVATION: 1696.16' MSL

WELL CONSTRUCTION DIAGRAM
WELL M-44
HENDERSON, NEVADA

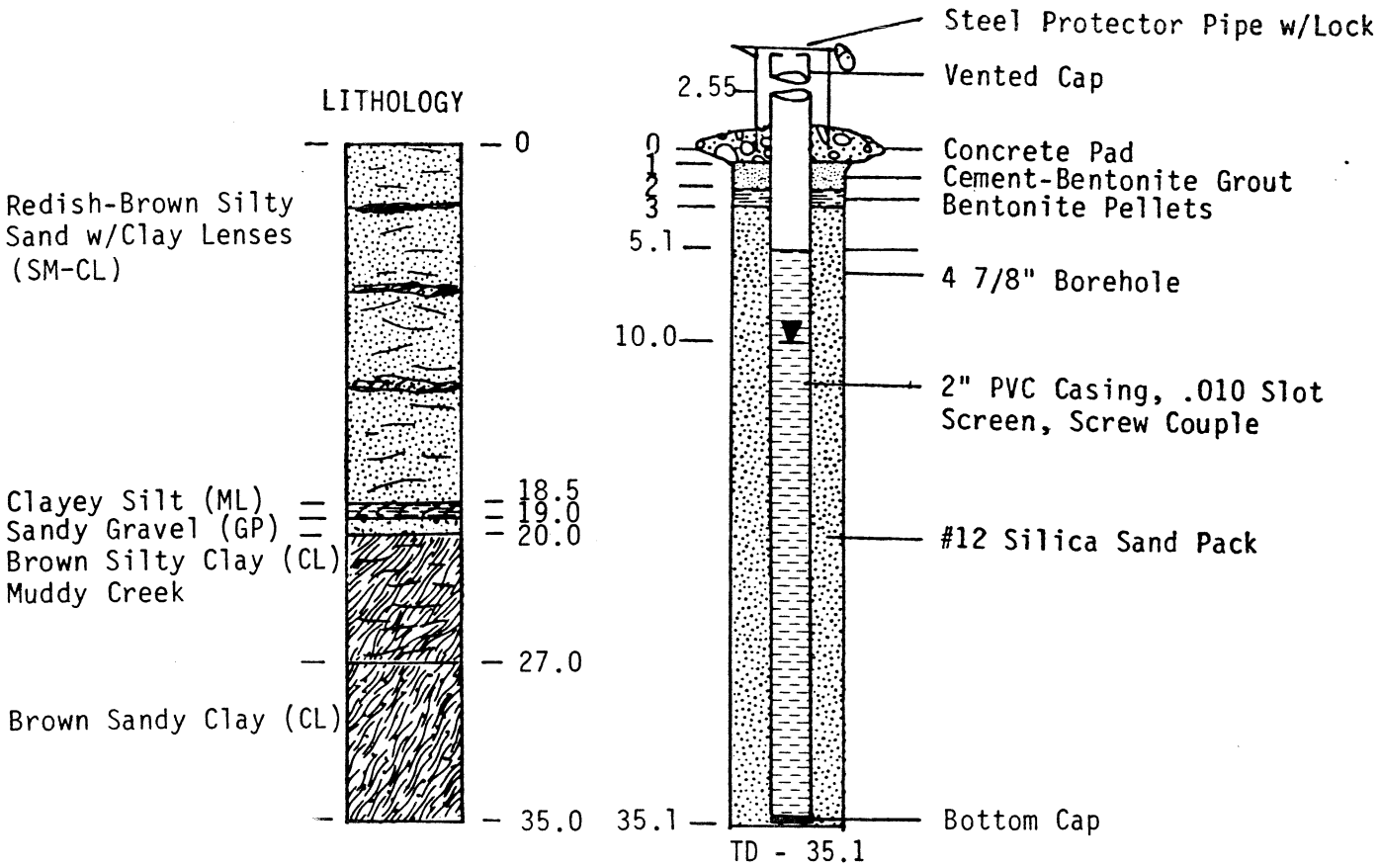

DATE DRILLED: 8/1/85
DRILLED BY: Kleinfelder & Assoc.
DRILLING METHOD: Rotary Wash, Polycore
LOGGED BY: Bert Smith, Kerr-McGee
CASING ELEVATION: 1696.74' MSL

WELL CONSTRUCTION DIAGRAM
WELL - M-45
HENDERSON, NEVADA

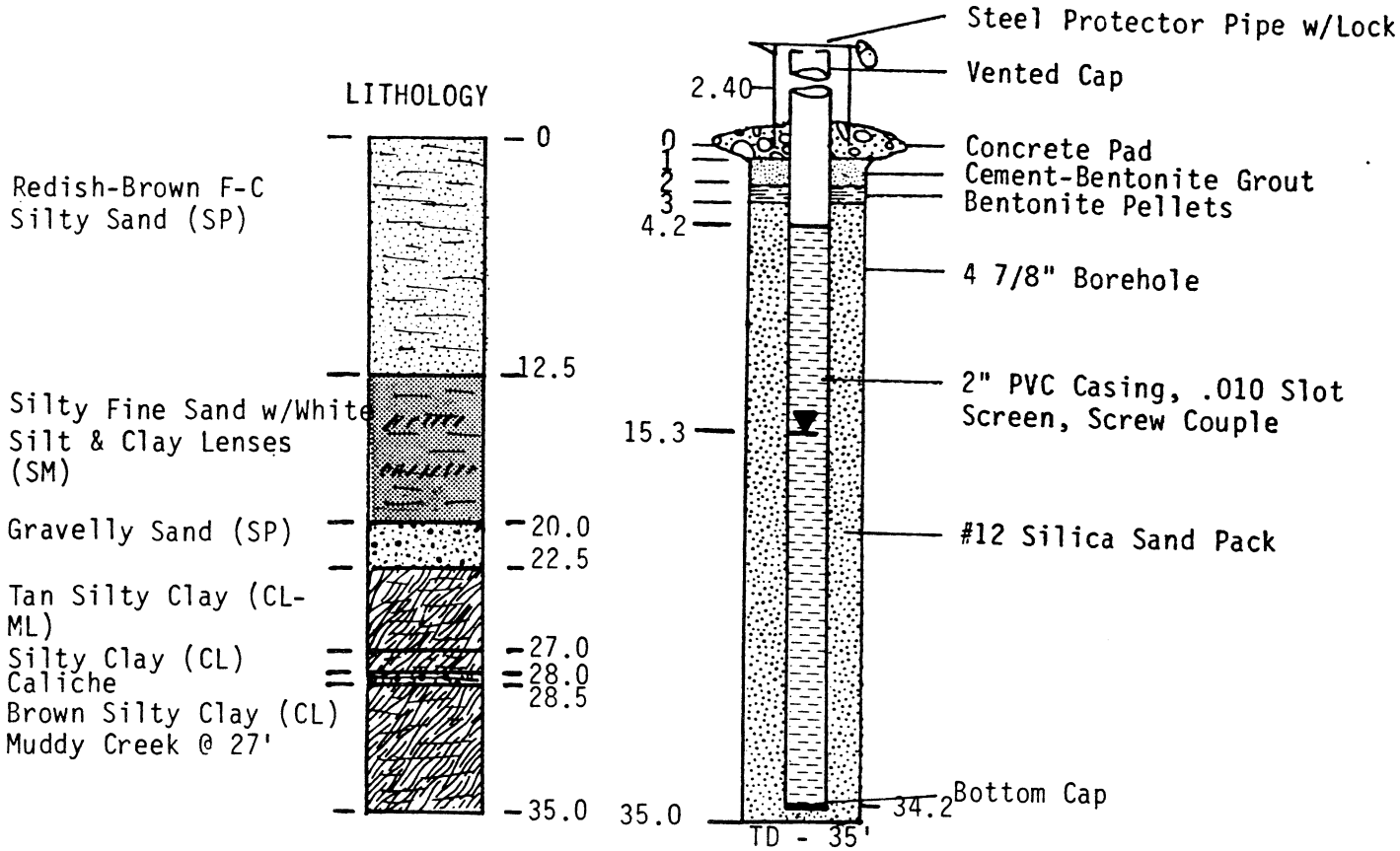

DATE DRILLED: 8/1/85
DRILLED BY: Kleinfelder & Assoc.
DRILLING METHOD: Rotary Wash, Polycore
LOGGED BY: Bert Smith, Kerr-McGee
CASING ELEVATION: 1697.13' MSL

WELL CONSTRUCTION DIAGRAM
WELL M-46
HENDERSON, NEVADA

P:A

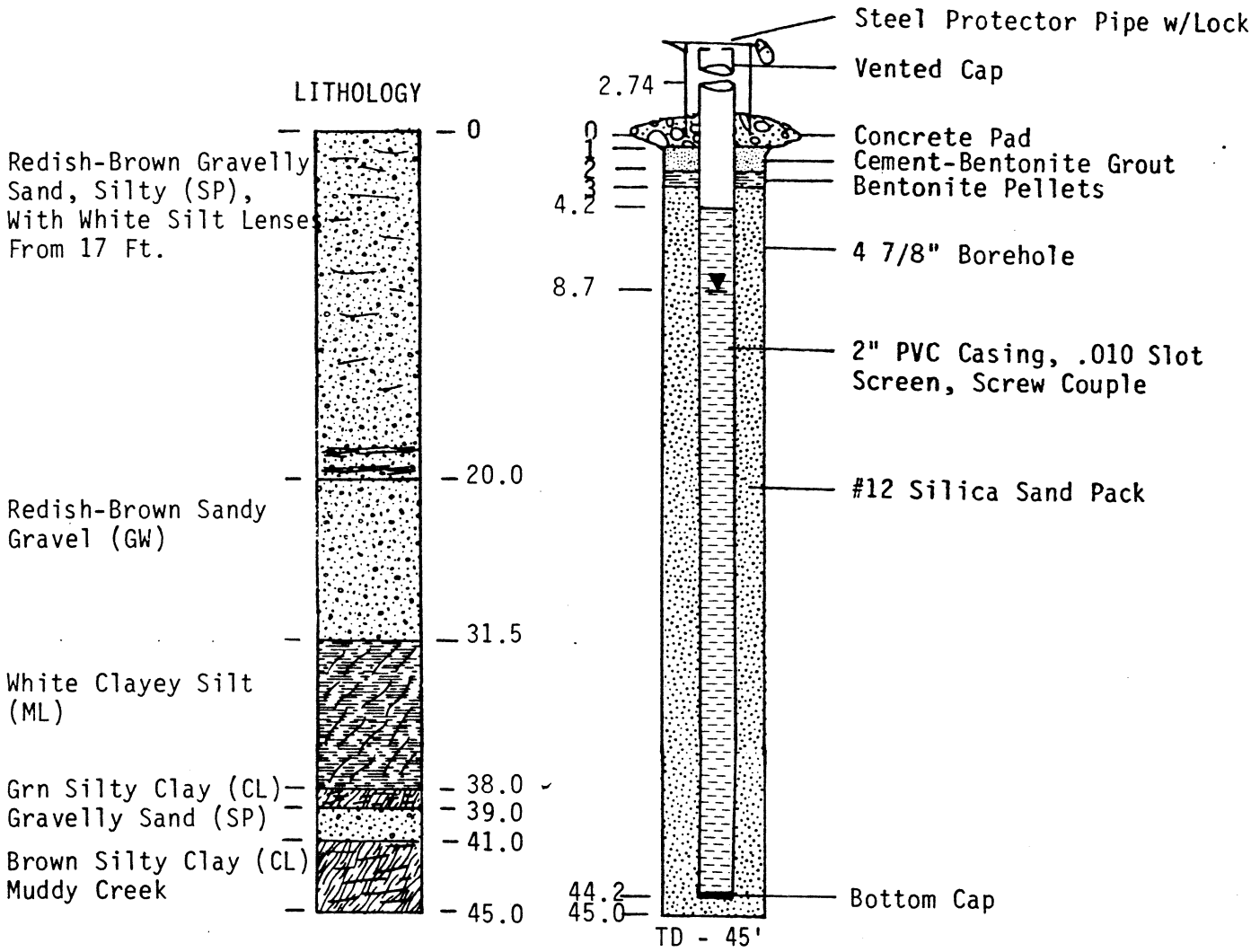

DATE DRILLED: 8/1/85
DRILLED BY: Kleinfelder & Assoc.
DRILLING METHOD: Rotary Wash, Polycore
LOGGED BY: Bert Smith, Kerr-McGee
CASING ELEVATION: 1716.08' MSL

WELL CONSTRUCTION DIAGRAM
WELL M-47
HENDERSON, NEVADA

P-A

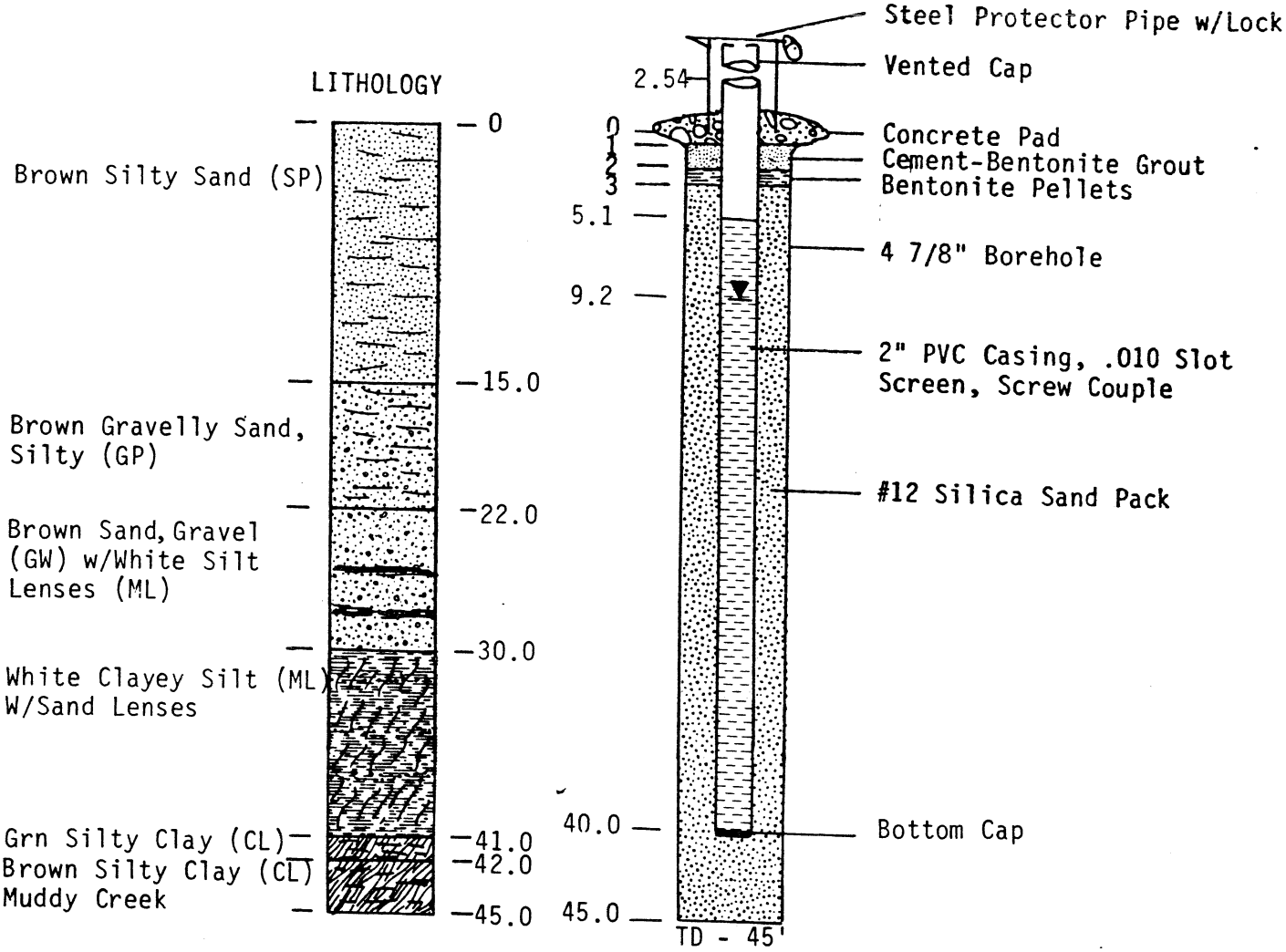

DATE DRILLED: 8/1/85
DRILLED BY: Kleinfelder & Assoc.
DRILLING METHOD: Rotary Wash, Polycore
LOGGED BY: Bert Smith, Kerr-McGee
CASING ELEVATION: 1715.04' MSL

WELL CONSTRUCTION DIAGRAM
WELL M-48
HENDERSON, NEVADA

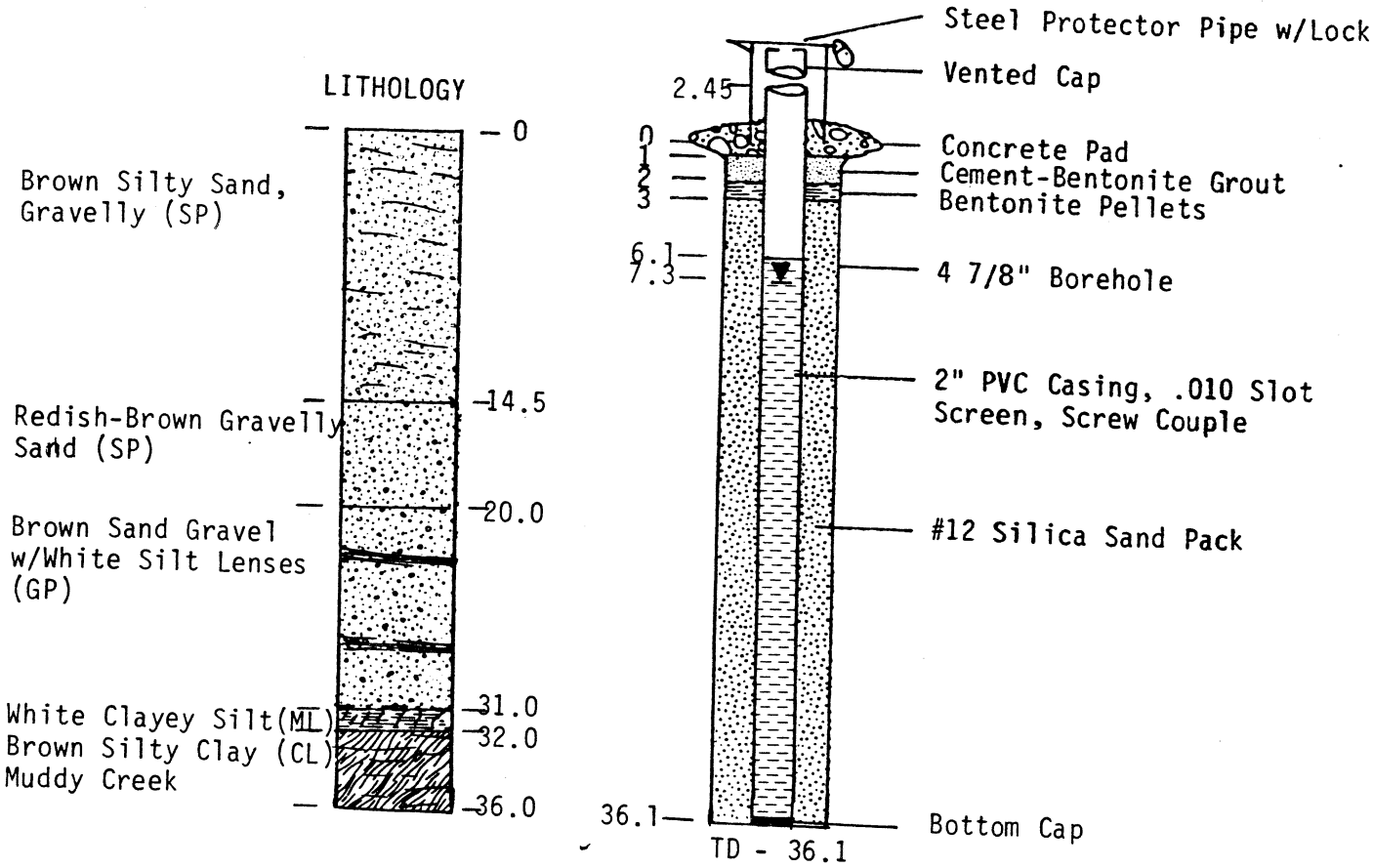

DATE DRILLED: 8/1/86
DRILLED BY: Kleinfelder & Assoc.
DRILLING METHOD: Rotary Wash, Polycore
LOGGED BY: Bert Smith, Kerr-McGee
CASING ELEVATION: 1719.05' MSL

WELL CONSTRUCTION DIAGRAM
WELL M-50 (REPLACEMENT WELL FOR M-1)
HENDERSON, NEVADA

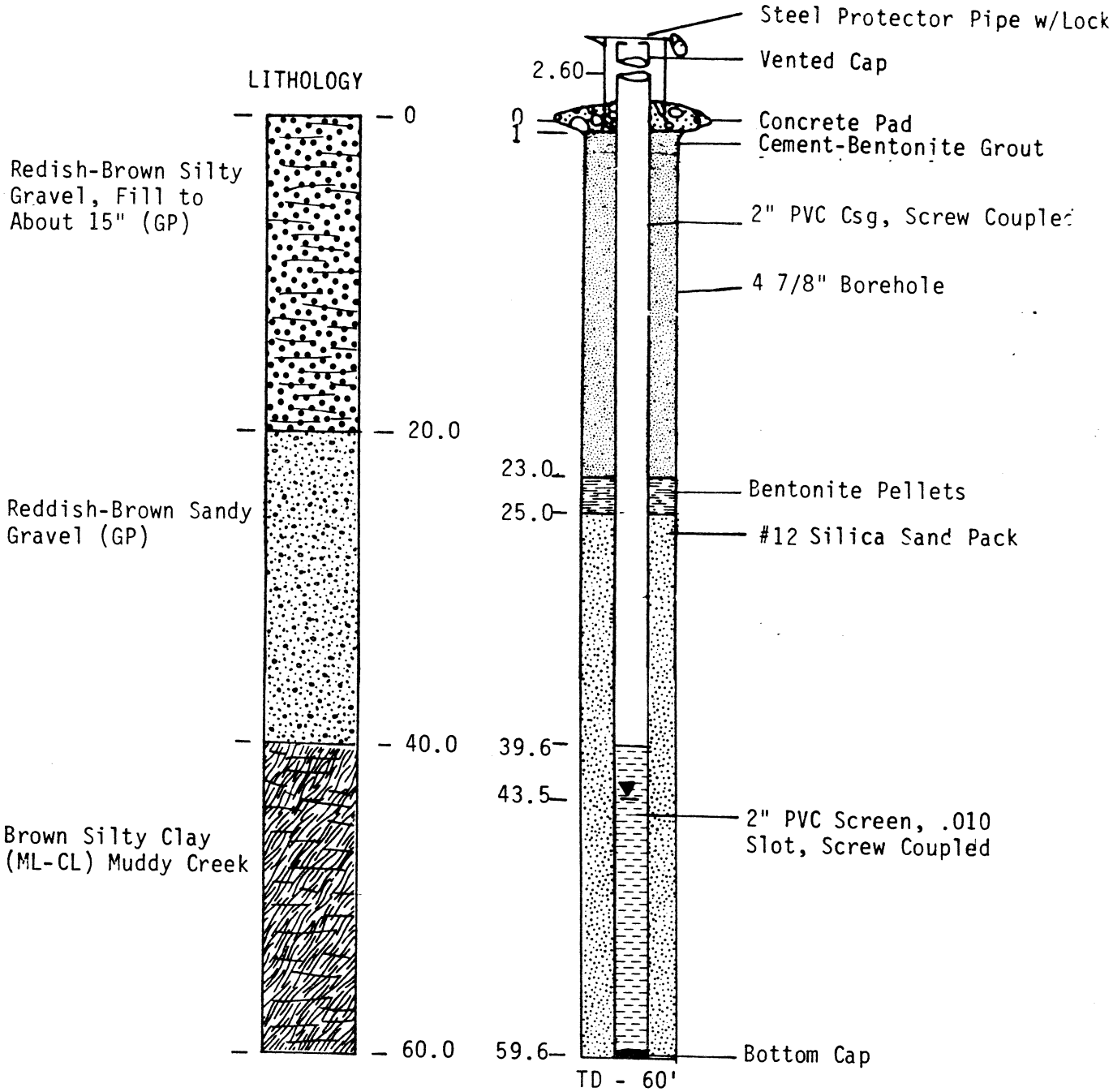

DATE DRILLED: 8/2/85
DRILLED BY: Kleinfelder & Assoc.
DRILLING METHOD: Rotary Wash-Polycore
LOGGED BY: Bert Smith, Kerr-McGee
CASING ELEVATION: 1793.87' MSL

WELL CONSTRUCTION DIAGRAM
WELL M-51
HENDERSON, NEVADA

P&A

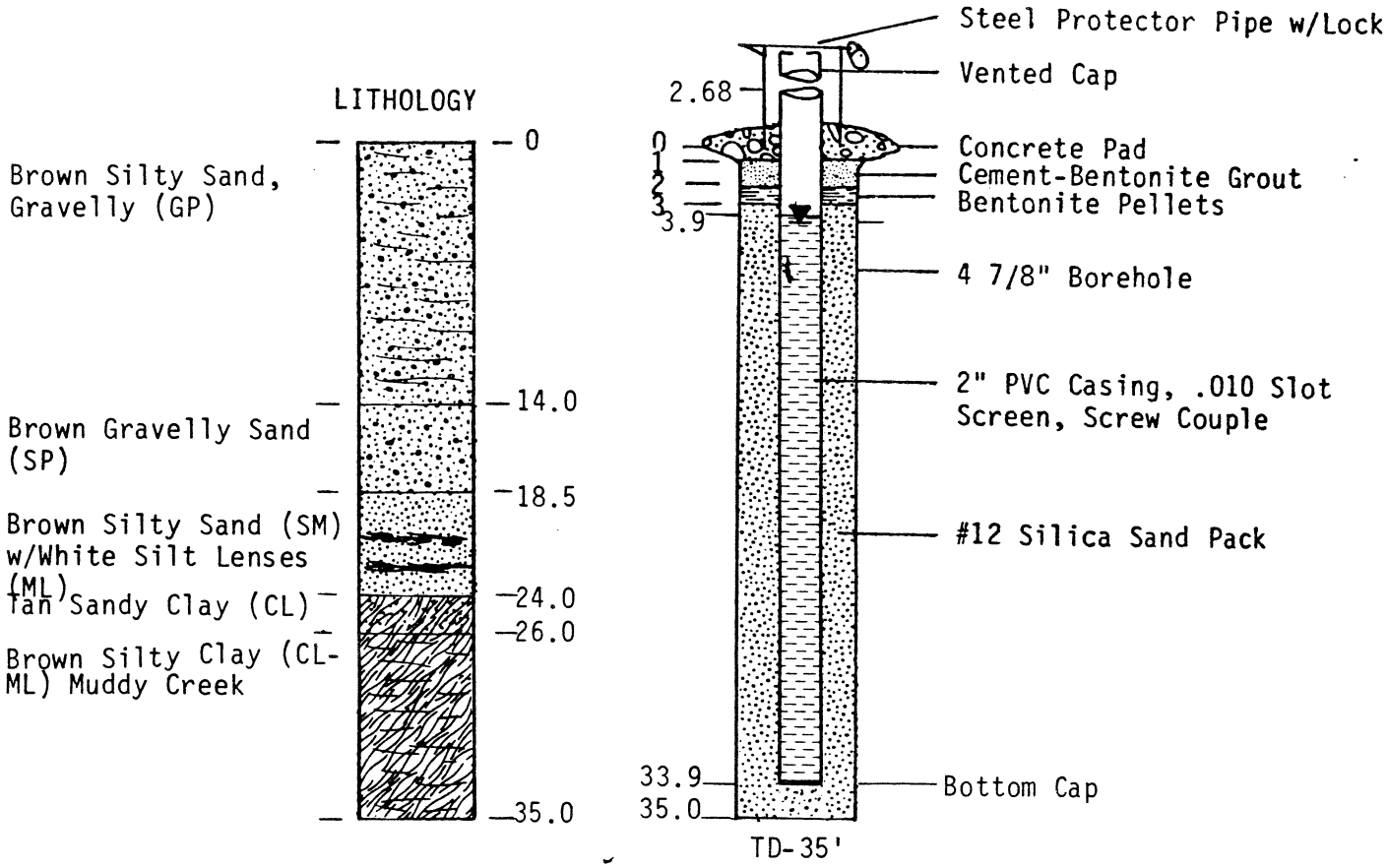

DATE DRILLED: 8/2/85
DRILLED BY: Kleinfelder & Assoc.
DRILLING METHOD: Rotary Wash, Polycore
LOGGED BY: Bert Smith, Kerr-McGee
CASING ELEVATION: 1695.34' MSL

WELL CONSTRUCTION DIAGRAM
WELL M-52 (REPACEMENT FOR M-40)
HENDERSON, NEVADA

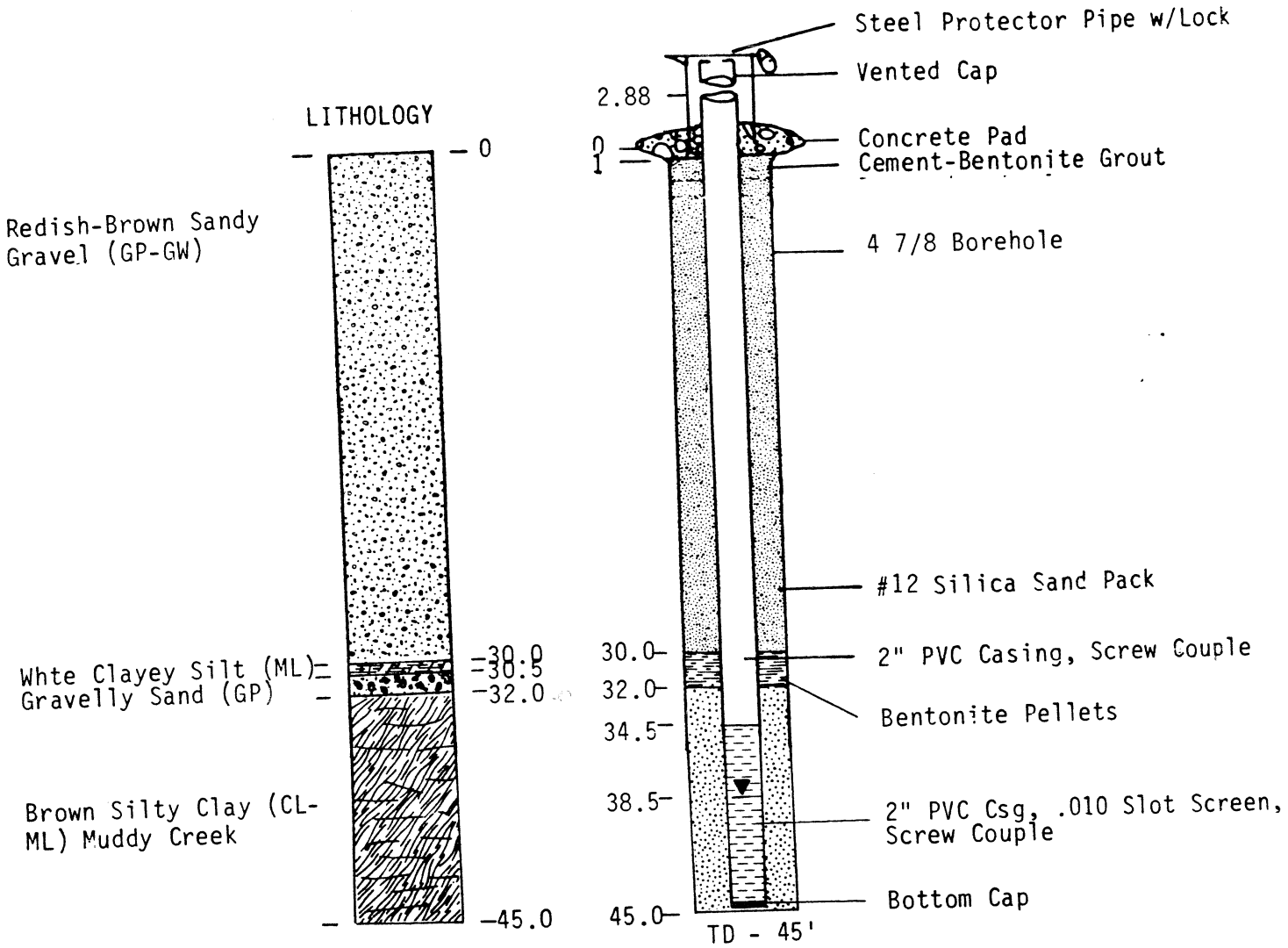

DATE DRILLED: 8/3/85
DRILLED BY: Kleintelder & Assoc.
DRILLING METHOD: Rotary Wash - Polycare
LOGGED BY: Bert Smith, Kerr-McGee
CASING ELEVATION: 1798.72' MSL

WELL CONSTRUCTION DIAGRAM
WELL M-53
HENDERSON, NEVADA

P&A
3/27/08

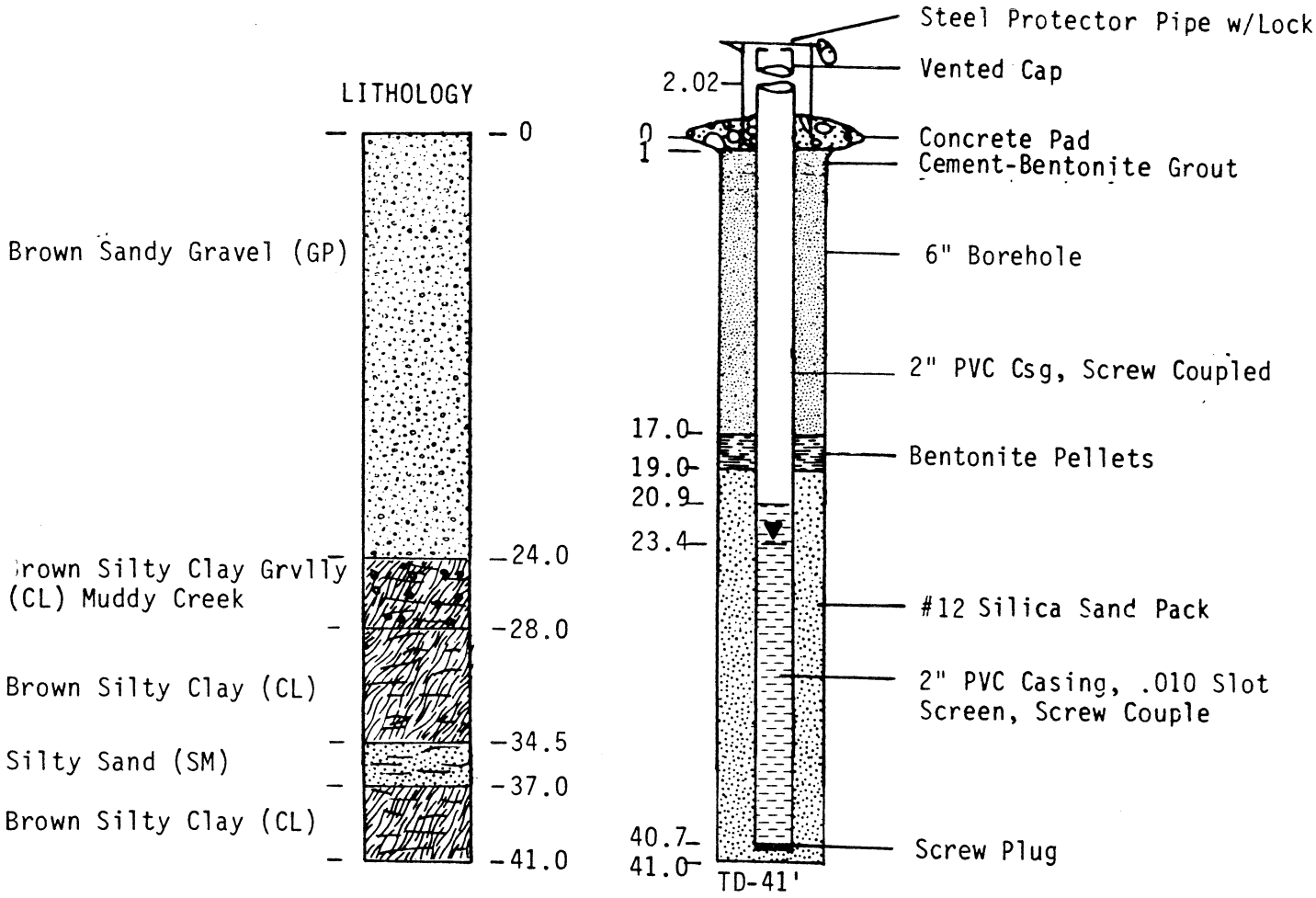

DATE DRILLED: 9/27/86
DRILLED BY: Mooney Drilling
DRILLING METHOD: Rotary Wash, Bentonite
LOGGED BY: Wyndal Goodman, Kerr-McGee
CASING ELEVATION:

P: A
3/4/02
4/03

WELL CONSTRUCTION DIAGRAM
WELL M-54
HENDERSON, NEVADA

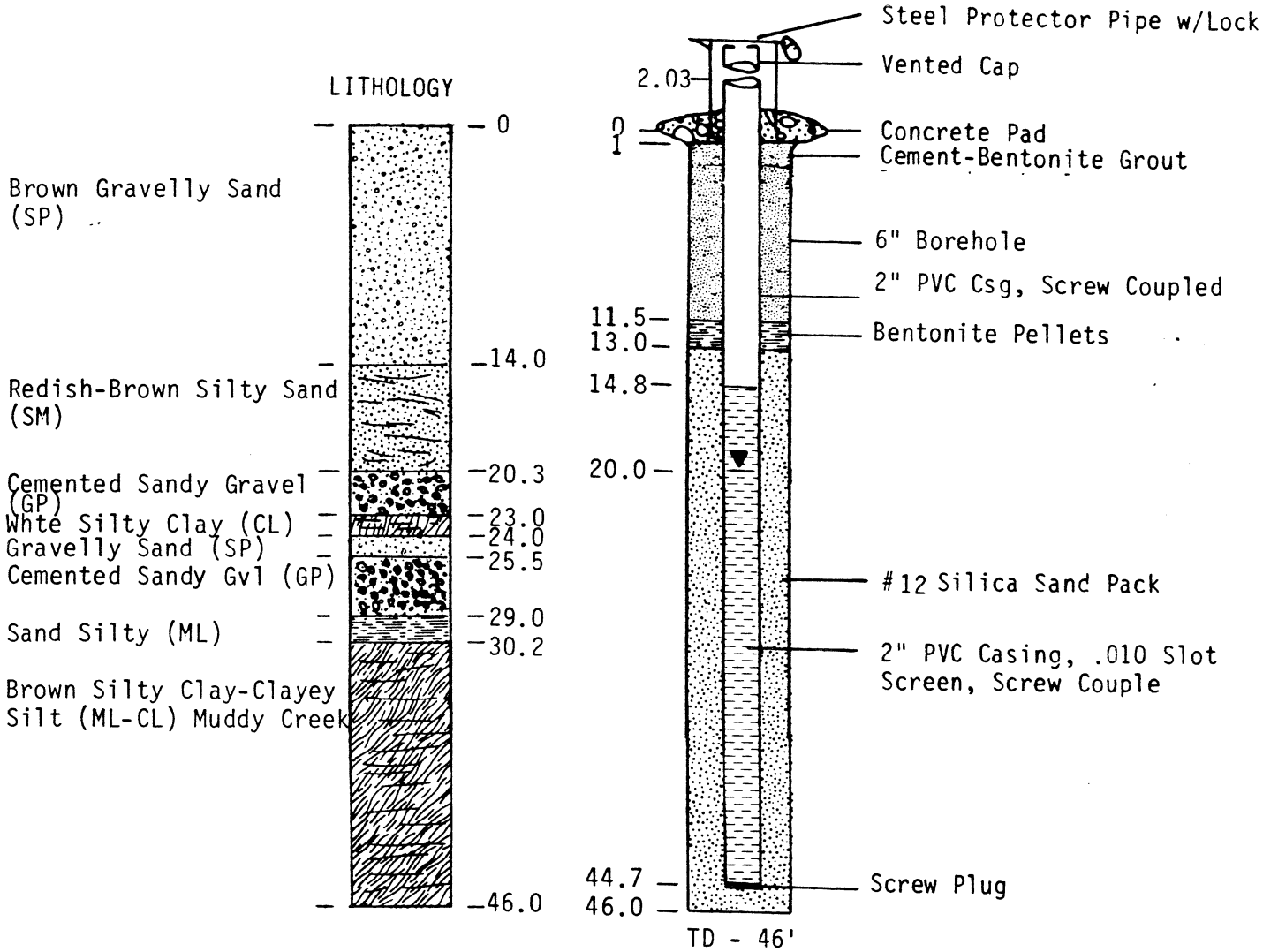

DATE DRILLED: 9/29/86
DRILLED BY: Mooney Drilling
DRILLING METHOD: Rotary Wash, Bentonite
LOGGED BY: Wyndal Goodman, Kerr-McGee
CASING ELEVATION:

WELL CONSTRUCTION DIAGRAM
WELL M-55
HENDERSON, NEVADA

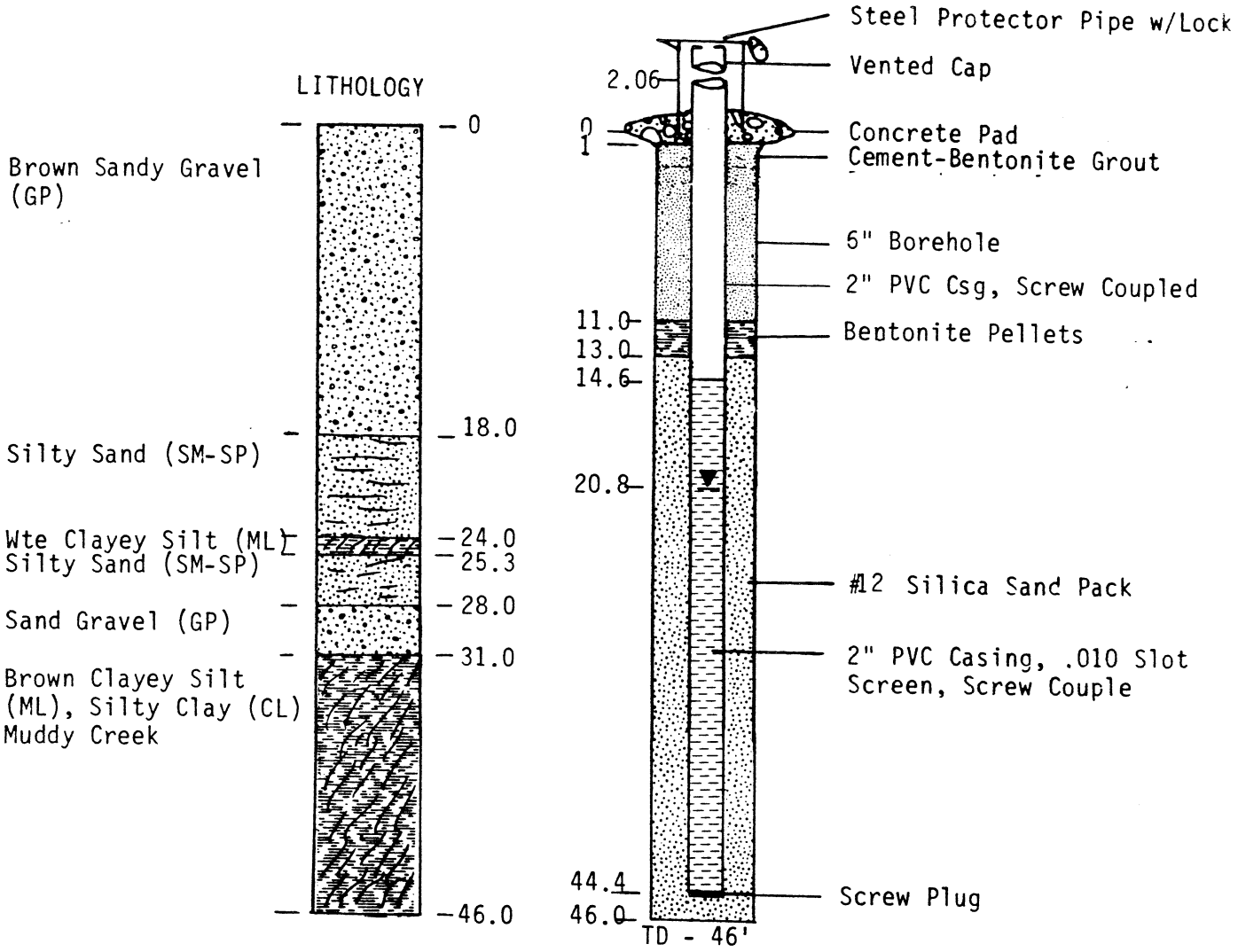

DATE DRILLED: 9/29/86
DRILLED BY: Mooney Drilling
DRILLING METHOD: Rotary Wash, Bentonite
LOGGED BY: Wyndal Goodman, Kerr-McGee
CASING ELEVATION:

WELL CONSTRUCTION DIAGRAM
WELL M-56
HENDERSON, NEVADA

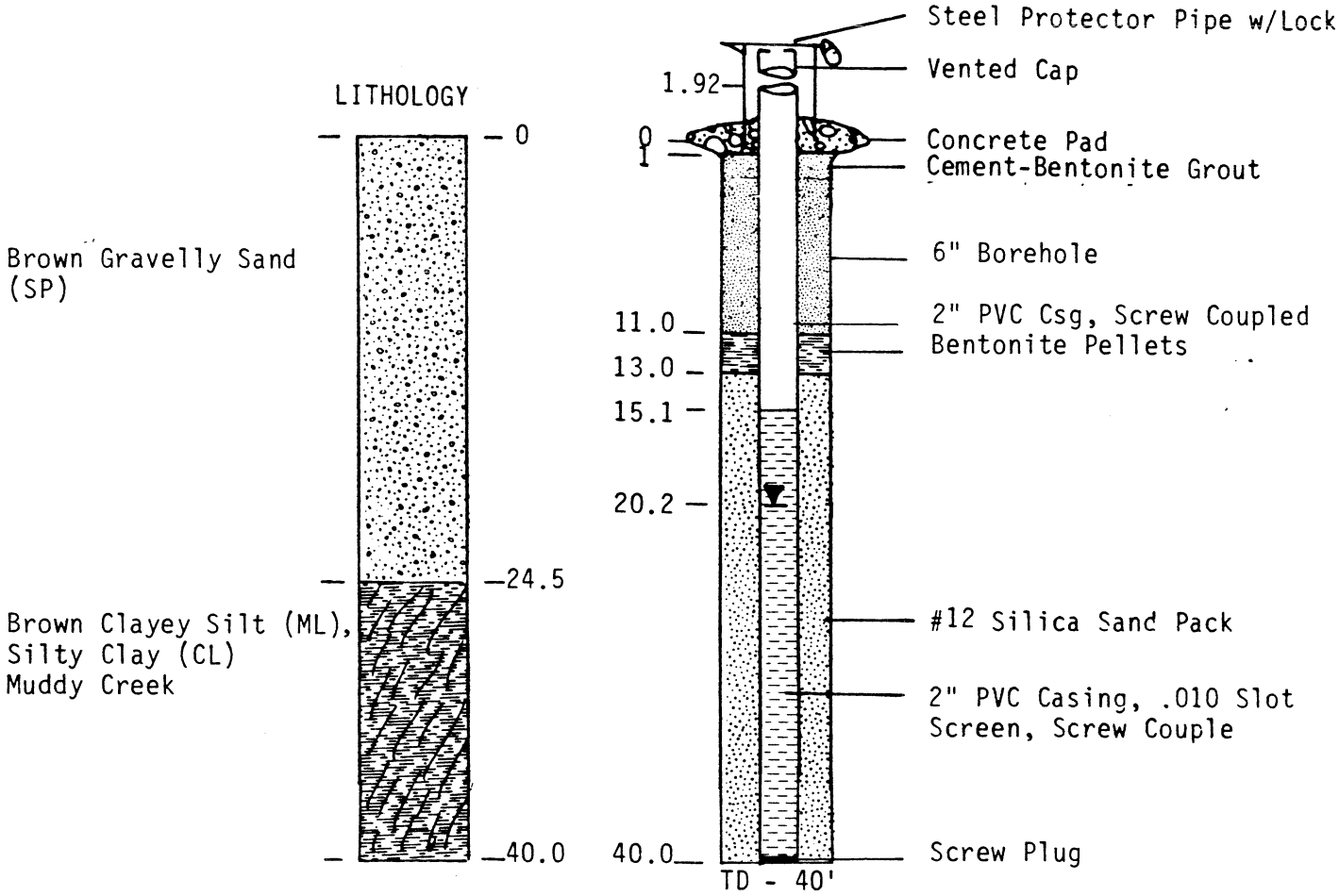

DATE DRILLED: 9/28/86
DRILLED BY: Mooney Drilling
DRILLING METHOD: Rotary Wash, Bentonite
LOGGED BY: Wyndal Goodman, Kerr-McGee
CASING ELEVATION:

WELL CONSTRUCTION DIAGRAM
WELL M-57
HENDERSON, NEVADA

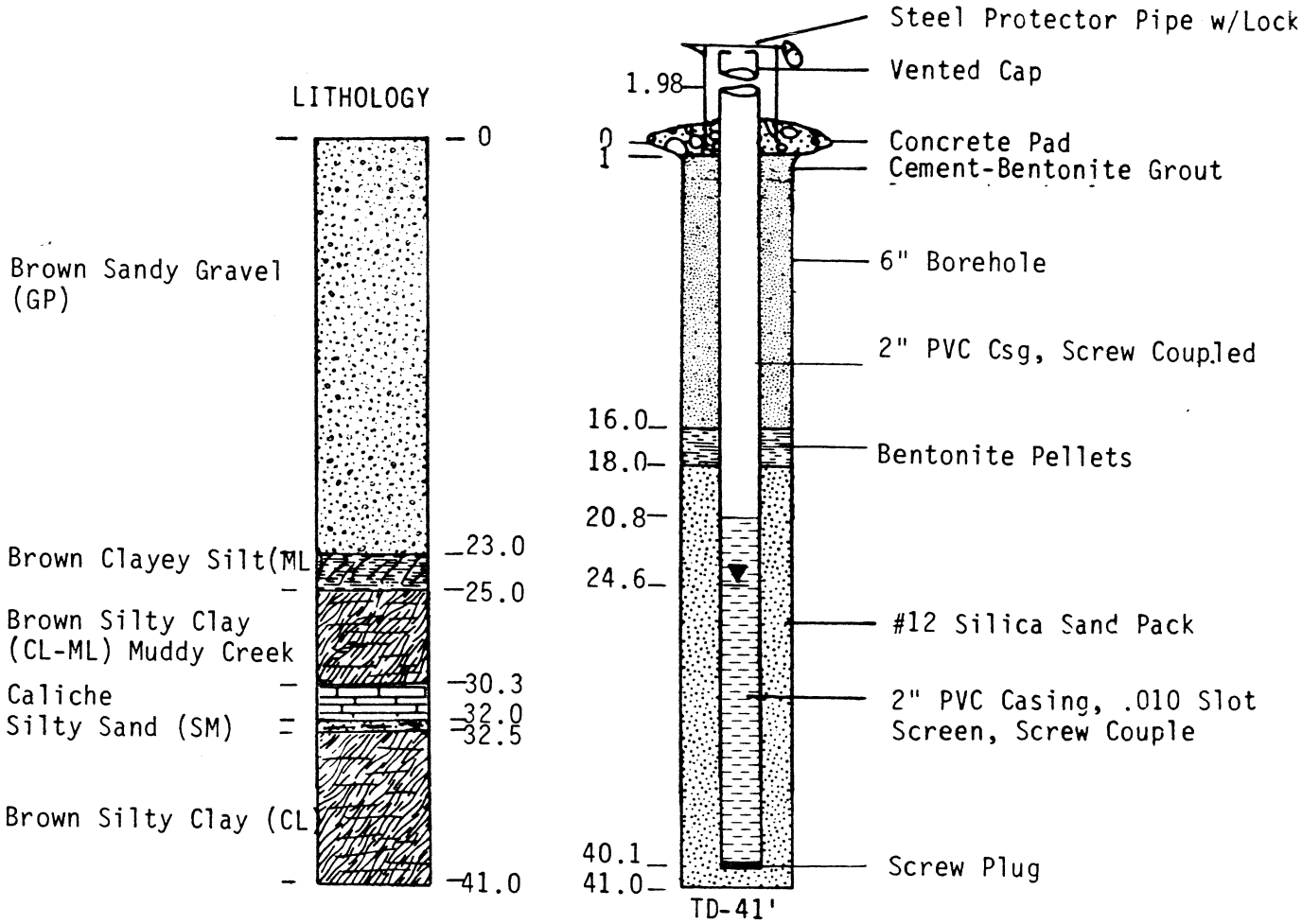

DATE DRILLED:9/30/86
DRILLED BY: Mooney Drilling
DRILLING METHOD: Rotary Wash, Bentonite
LOGGED BY: Wyndal Goodman, Kerr-McGee
CASING ELEVATION:

WELL CONSTRUCTION DIAGRAM
WELL M-58
HENDERSON, NEVADA

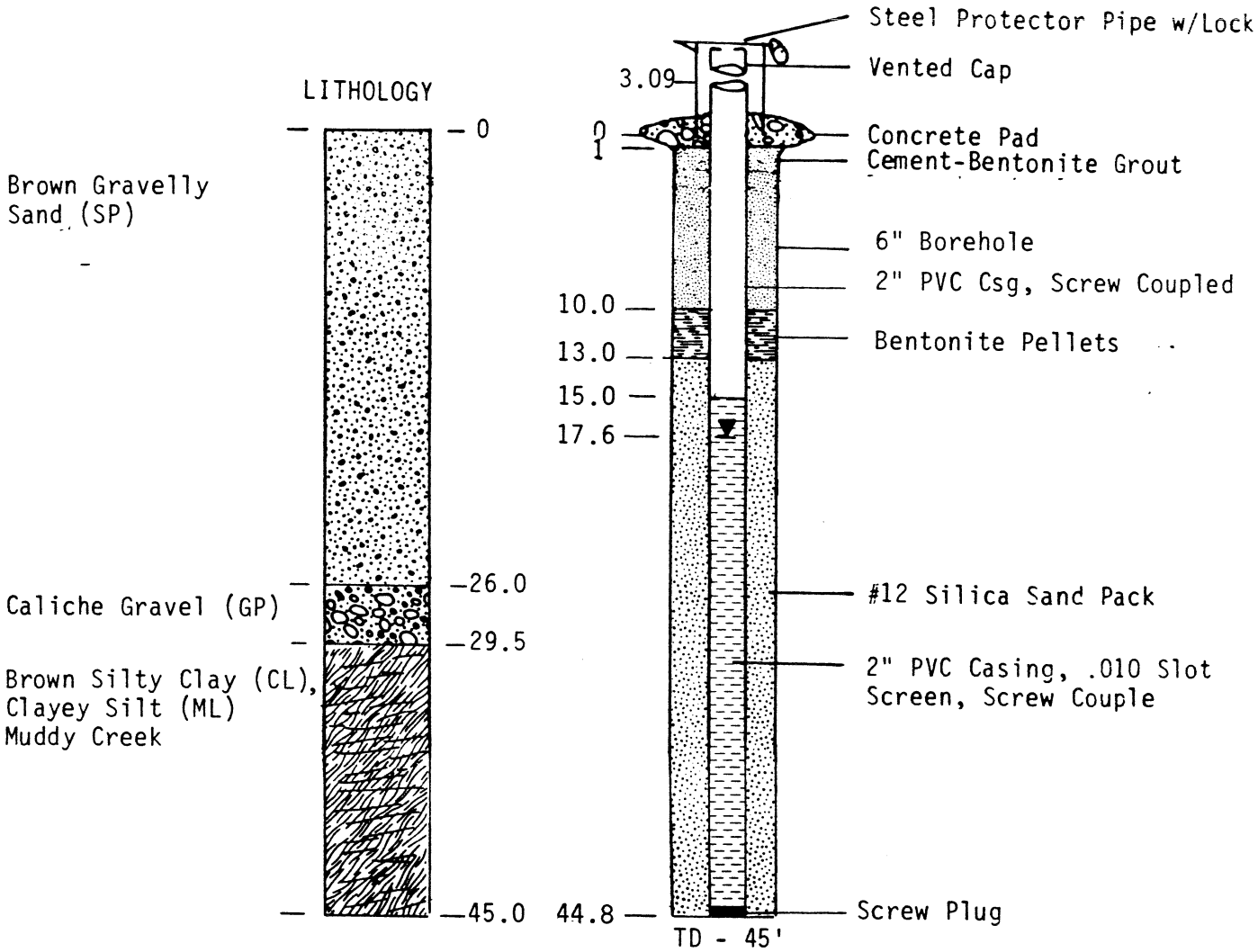

DATE DRILLED: 9/30/86
DRILLED BY:Mooney Drilling
DRILLING METHOD: Rotary Wash, Bentonite
LOGGED BY: Wyndal Goodman, Kerr-McGee
CASING ELEVATION:

P; A 4of2 6/03

WELL CONSTRUCTION DIAGRAM
WELL M-59
HENDERSON, NEVADA

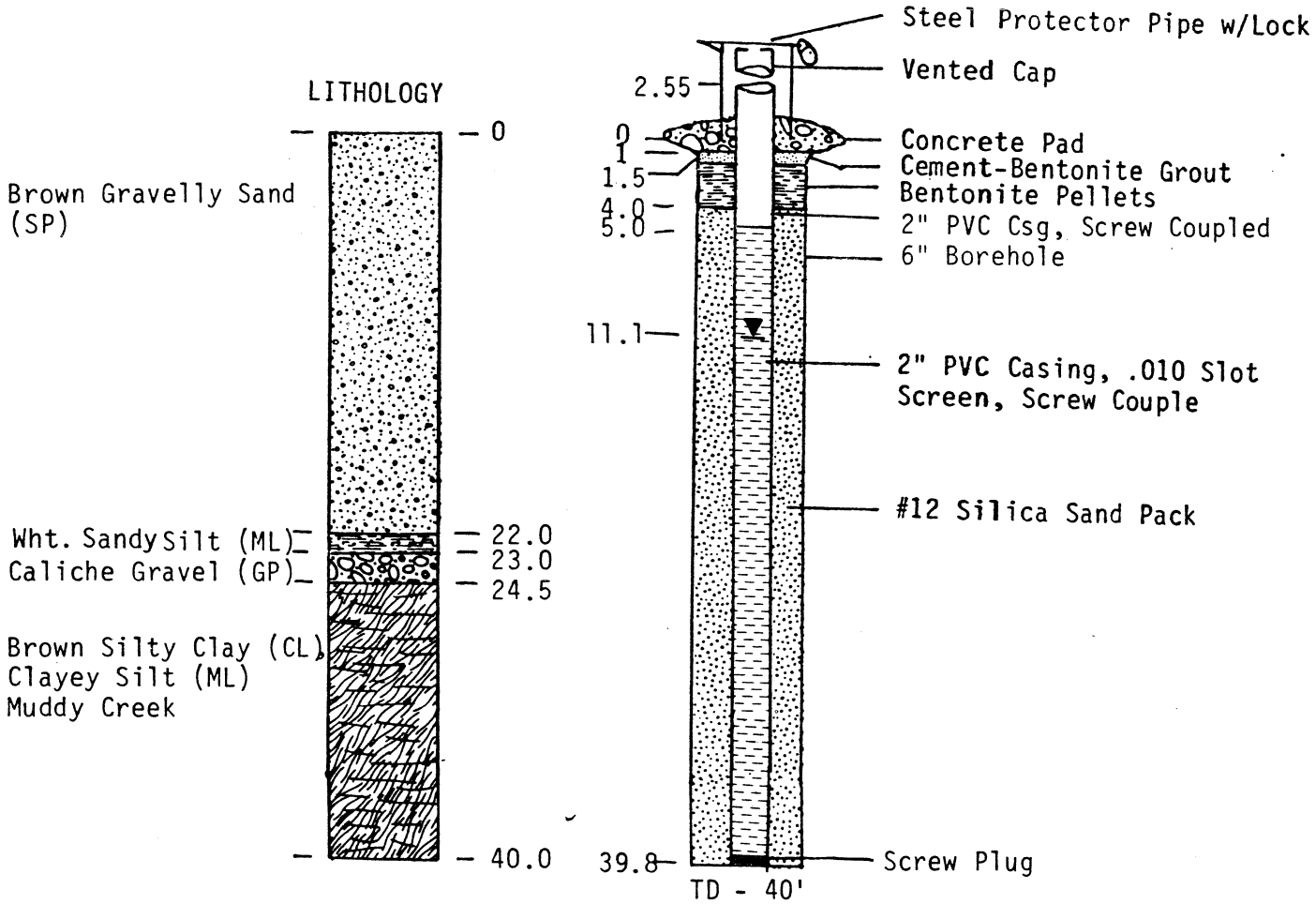

DATE DRILLED: 9/28/86
DRILLED BY: Mooney Drilling
DRILLING METHOD: Rotary Wash, Bentonite
LOGGED BY: Wyndal Goodman, Kerr-McGee
CASING ELEVATION:

WELL CONSTRUCTION DIAGRAM
WELL M-60
HENDERSON, NEVADA

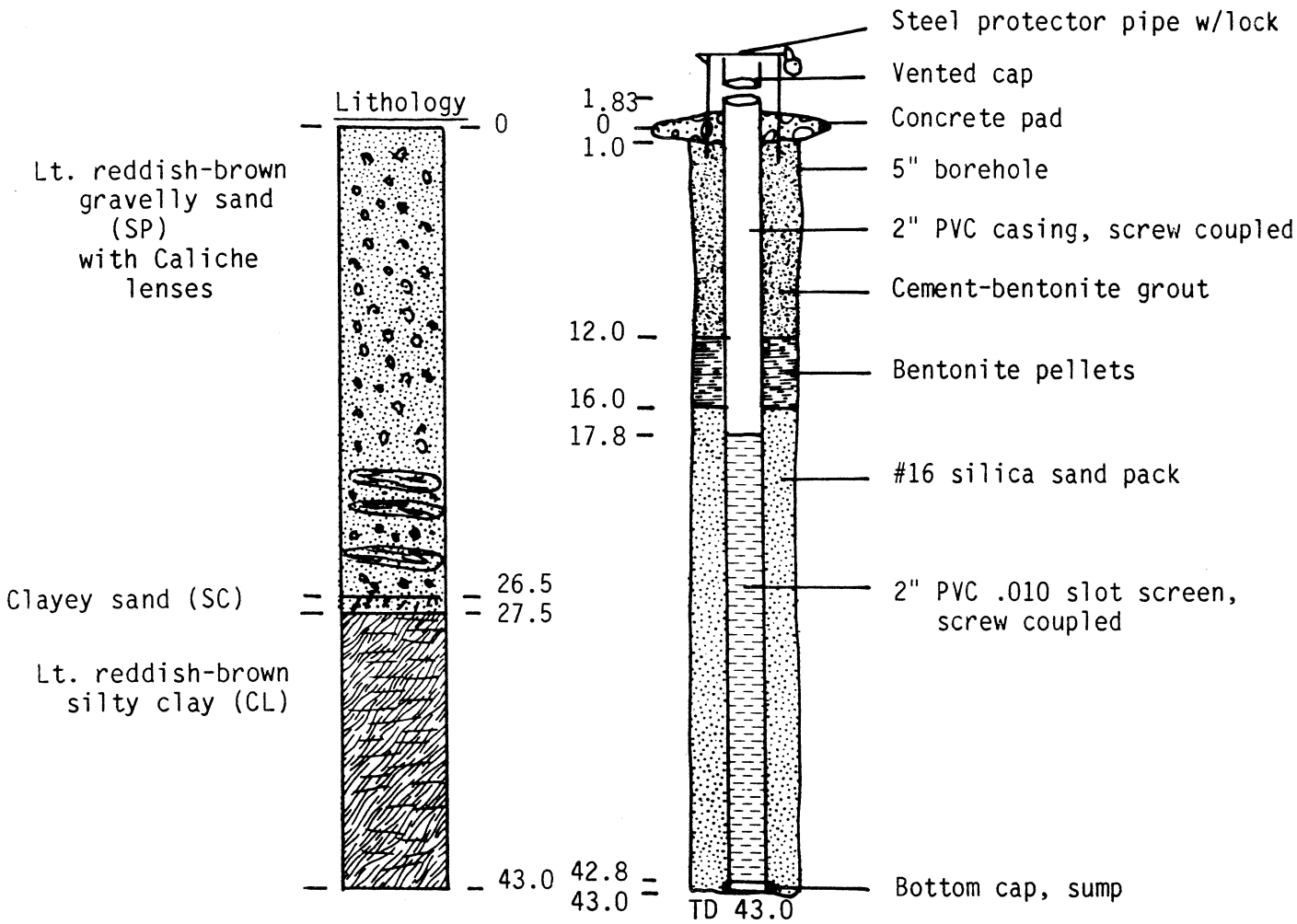

Date Drilled: 12/10/86
Drilled By: Mooney Drilling
Drilling Method: Rotary Wash, Bentonite
Logged By: W. M. Goodman, KM

WELL CONSTRUCTION DIAGRAM
WELL M-61
HENDERSON, NEVADA

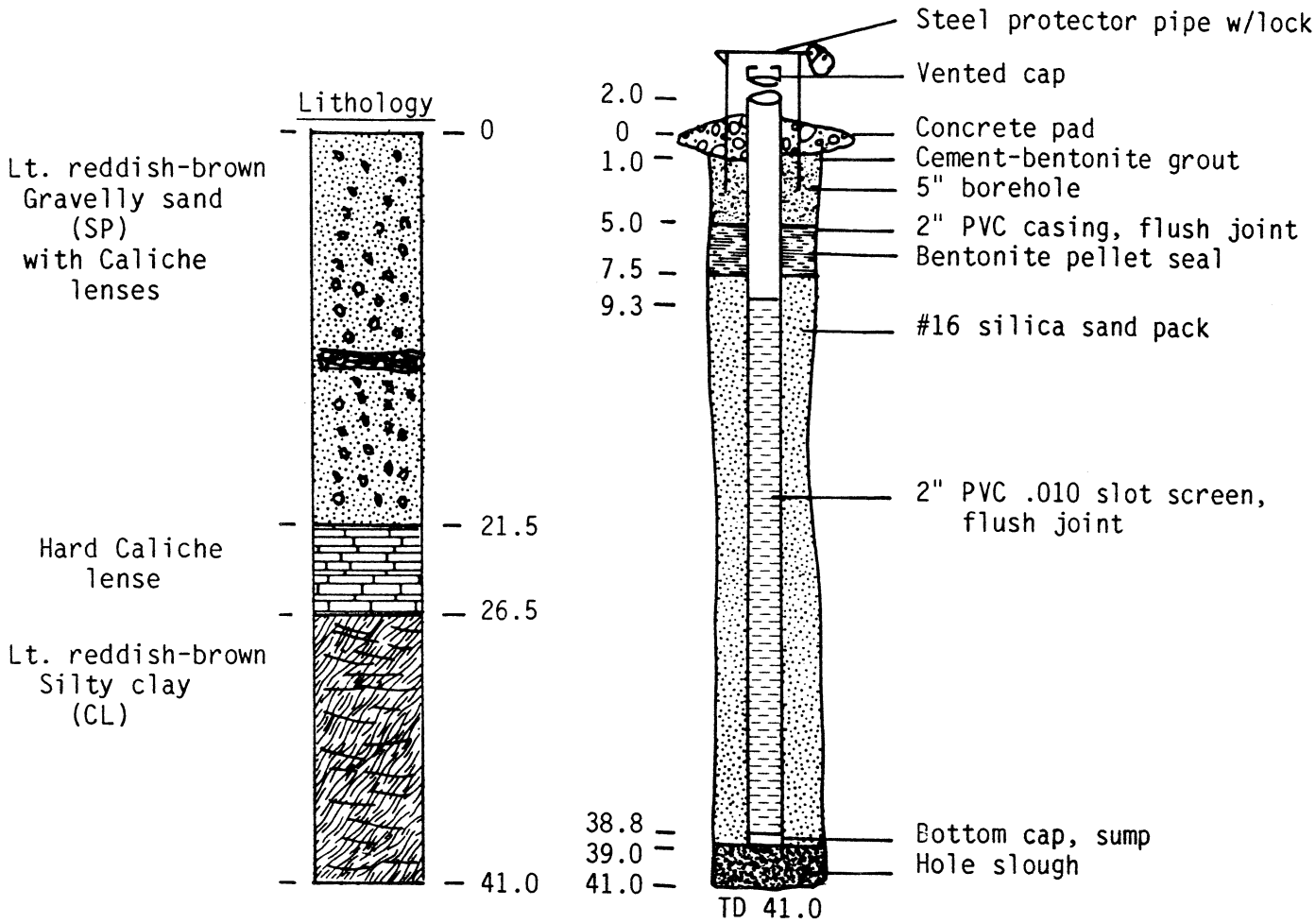

Date Drilled: 12/8/86
Drilled By: Mooney Drilling
Drilling Method: Rotary Wash, Bentonite
Logged By: W. M. Goodman, KM

WELL CONSTRUCTION DIAGRAM
WELL M-62
HENDERSON, NEVADA

P-A
3/27/87

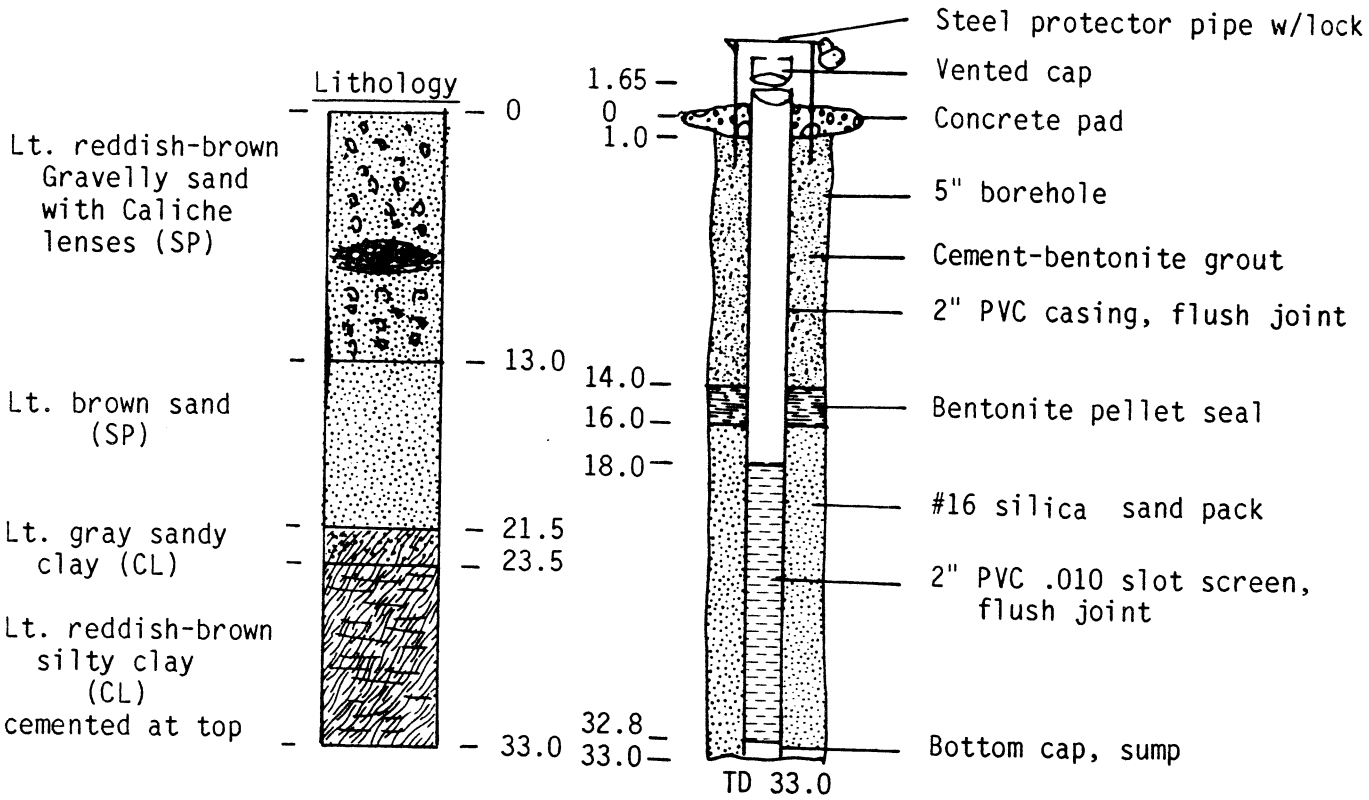

Date Drilled: 12/17/86
Drilled By: Mooney Drilling
Drilling Method: Rotary Wash, Bentonit
Logged By: W. M. Goodman, KM

WELL CONSTRUCTION DIAGRAM
WELL M-63
HENDERSON, NV

P&A
3/23/88

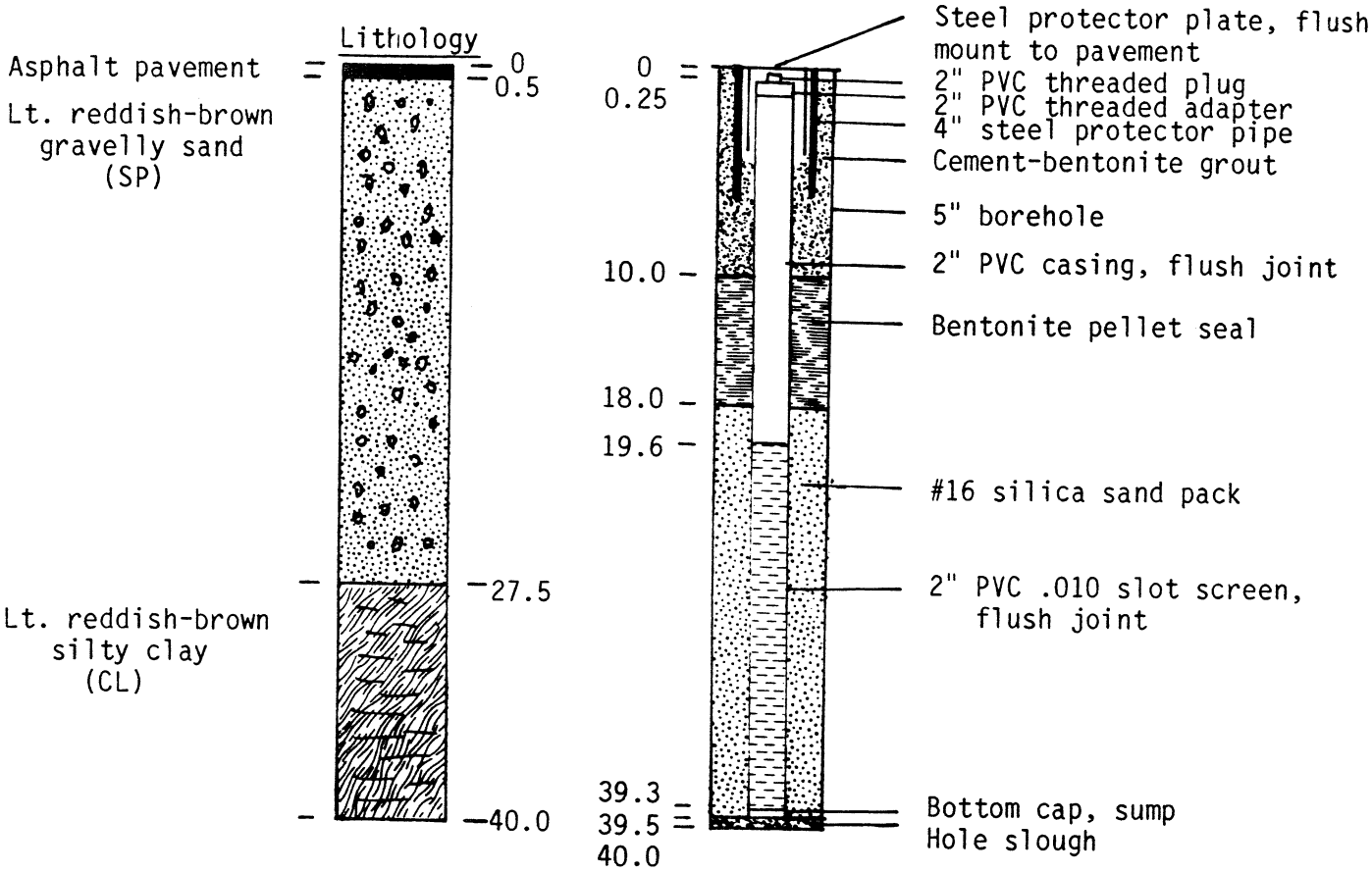

Date Drilled: 12-18-86
Drilled By: Mooney Drilling
Drilling Method: Rotary Wash, Bentonite
Logged By: W. M. Goodman, KM

WELL CONSTRUCTION DIAGRAM
WELL M-64
HENDERSON, NV

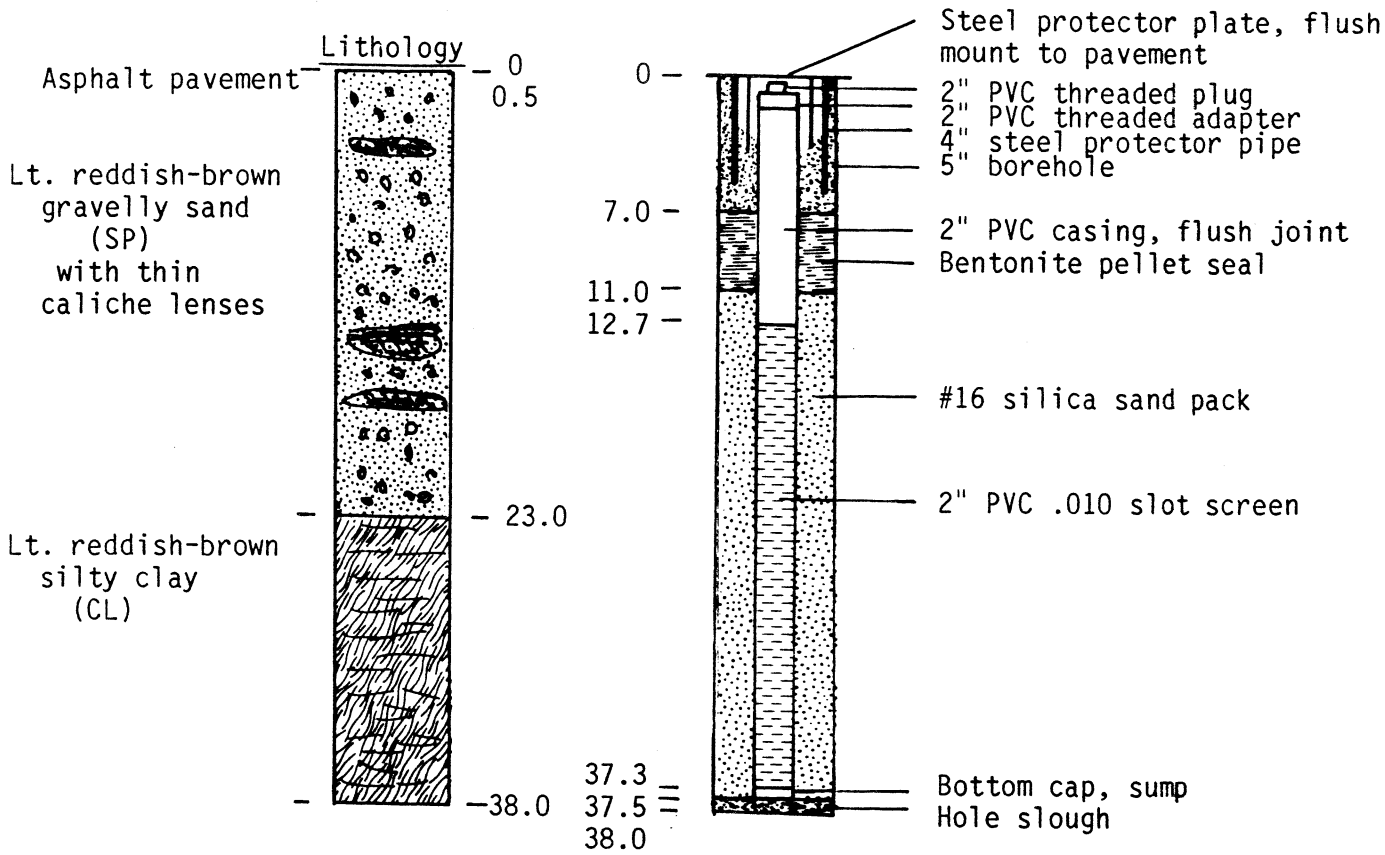

Date Drilled: 12-19-86
Drilled By: Mooney Drilling
Drilling Method: Rotary Wash, Bentonite
Logged By: W M. Goodman, KM

WELL CONSTRUCTION DIAGRAM
WELL M-65
HENDERSON, NEVADA

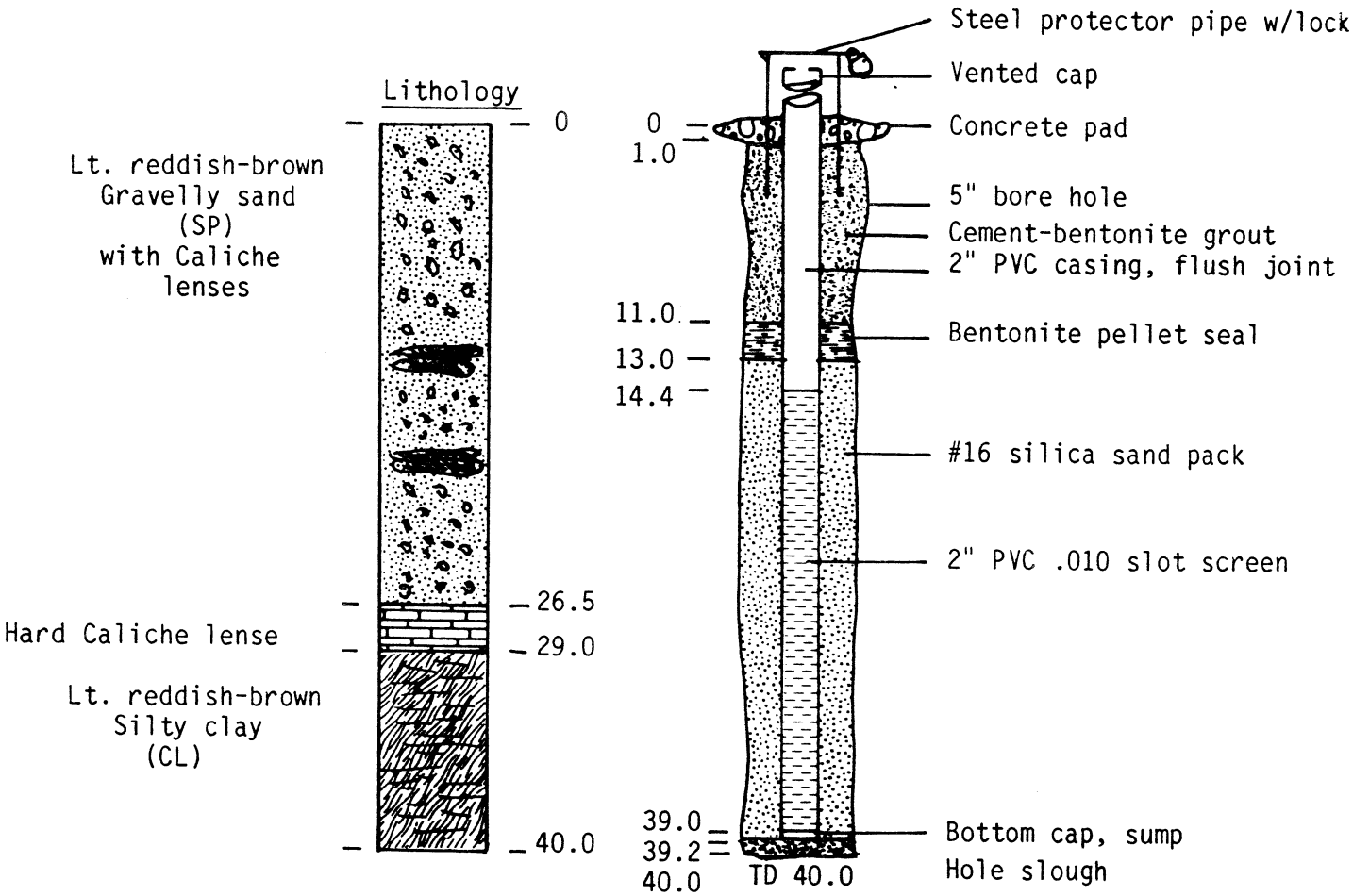

Date Drilled: 12/16/87
Drilled By: Mooney Drilling
Drilling Method: Rotary Wash, Bentonite
Logged By: W. M. Goodman, KM

WELL CONSTRUCTION DIAGRAM
WELL M-66
HENDERSON, NEVADA

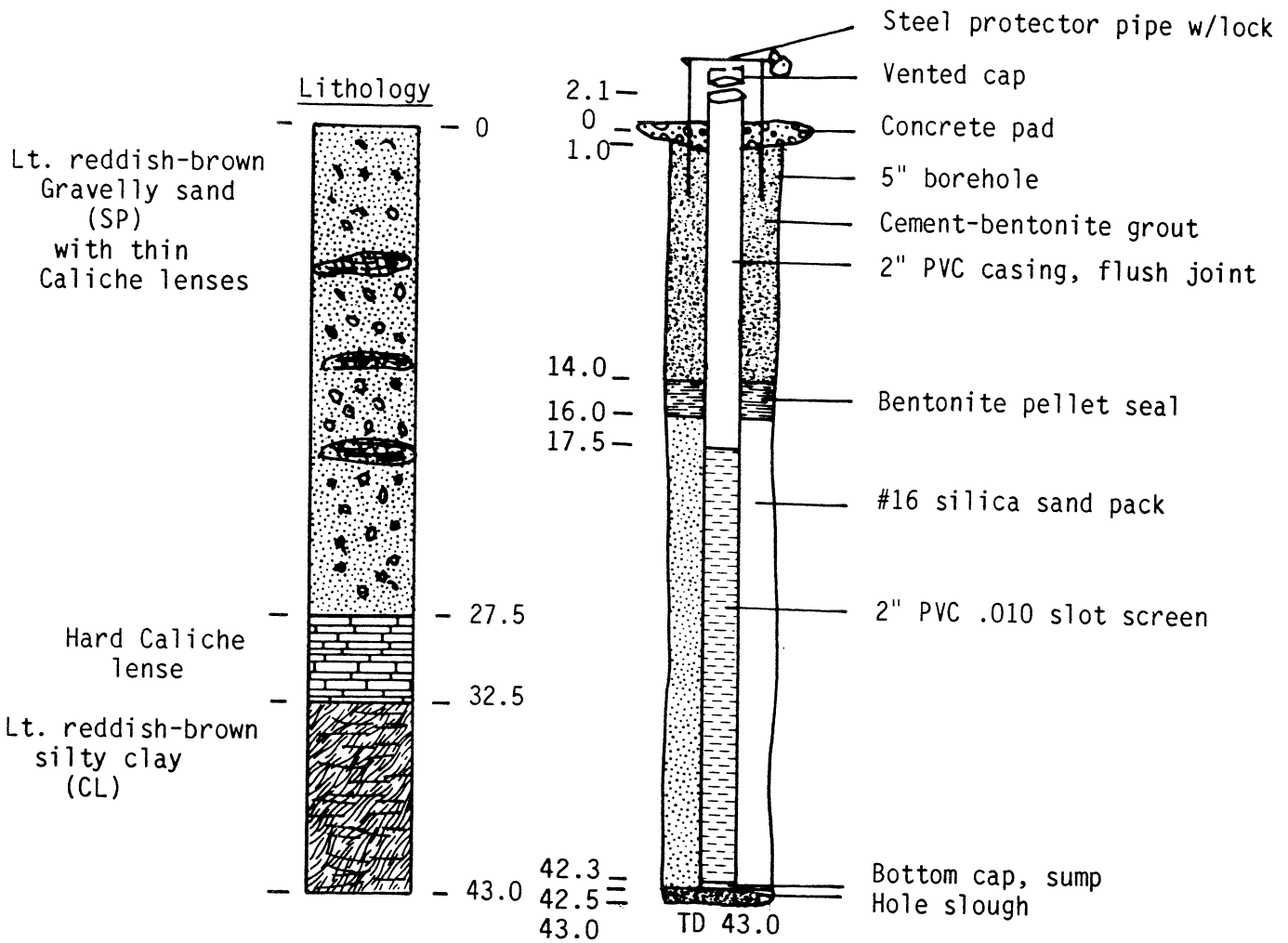

Date Drilled: 12/15/86
Drilled By: Mooney Drilling
Drilling Method: Rotary Wash, Bentonite
Logged By: W. M. Goodman, KM

WELL CONSTRUCTION DIAGRAM
WELL M-67
HENDERSON, NEVADA

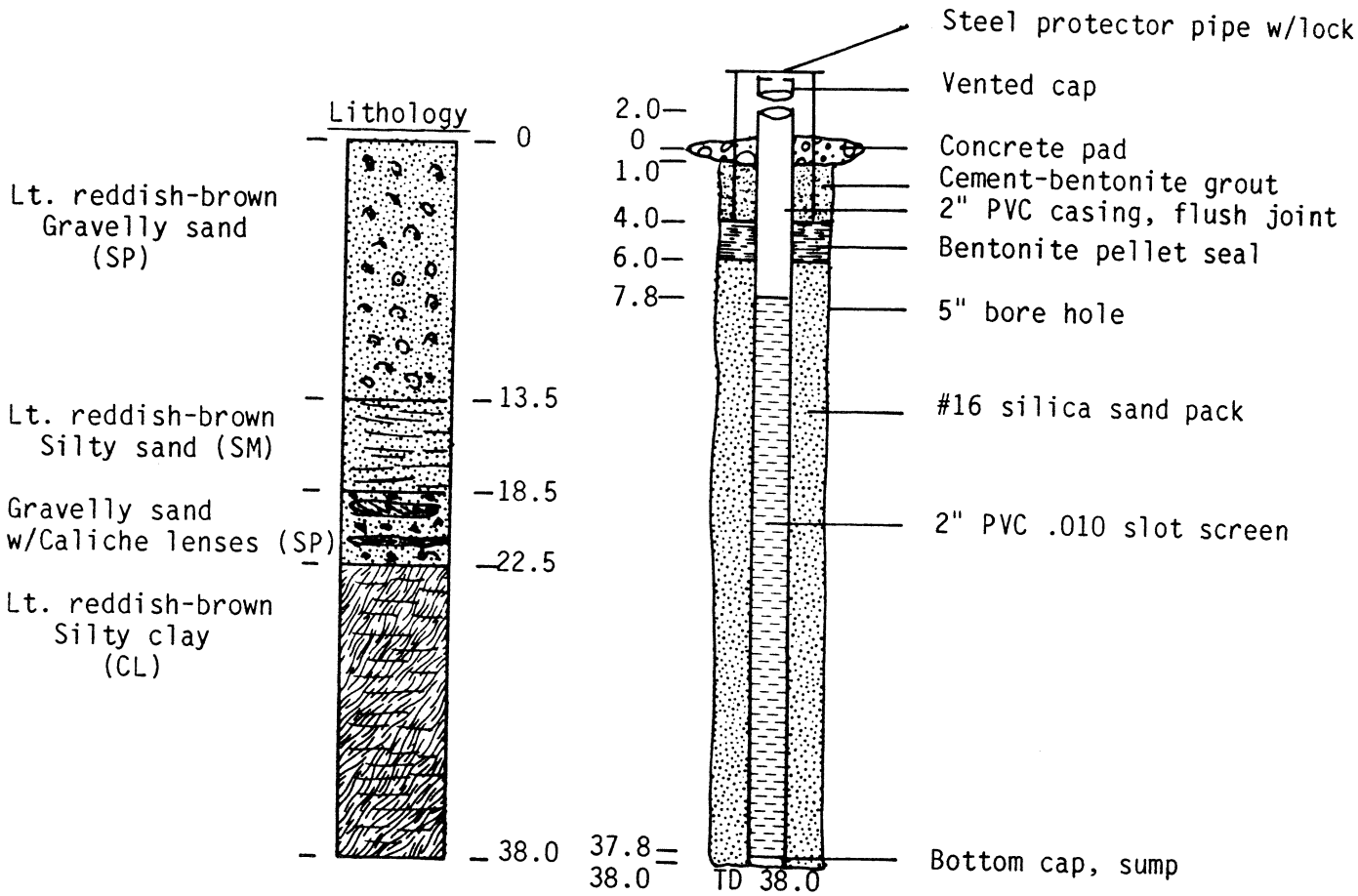

Date Drilled: 12/12/86
Drilled By: Mooney Drilling
Drilling Method: Rotary Wash, Bentonite
Logged By: W. M. Goodman, KM

WELL CONSTRUCTION DIAGRAM
WELL M-68
HENDERSON, NEVADA

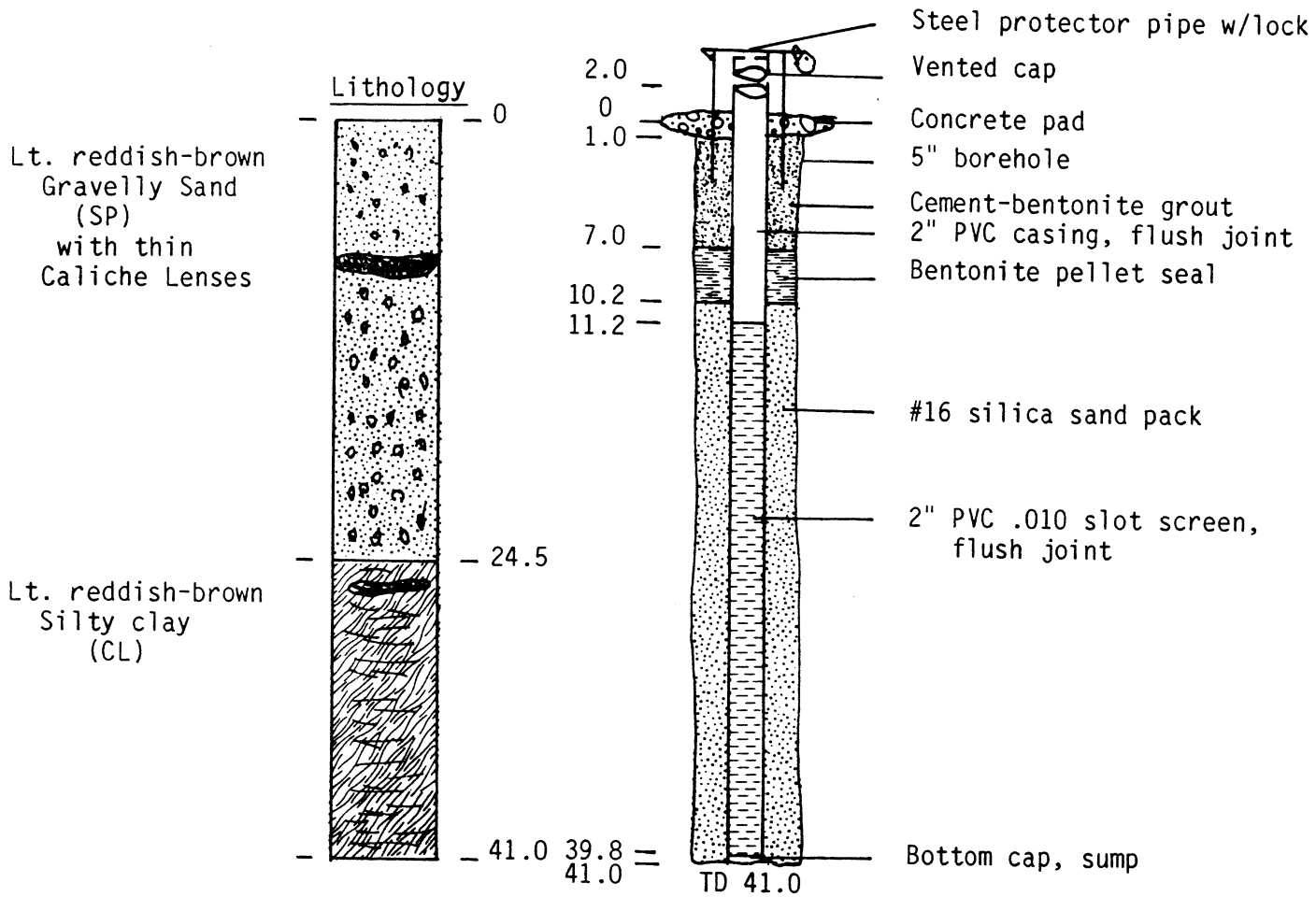

Date Drilled: 12/11/86
Drilled By: Mooney Drilling
Drilling Method: Rotary Wash, Bentonite
Logged By: W. M. Goodman, KM

WELL CONSTRUCTION DIAGRAM
WELL M-69
HENDERSON, NEVADA

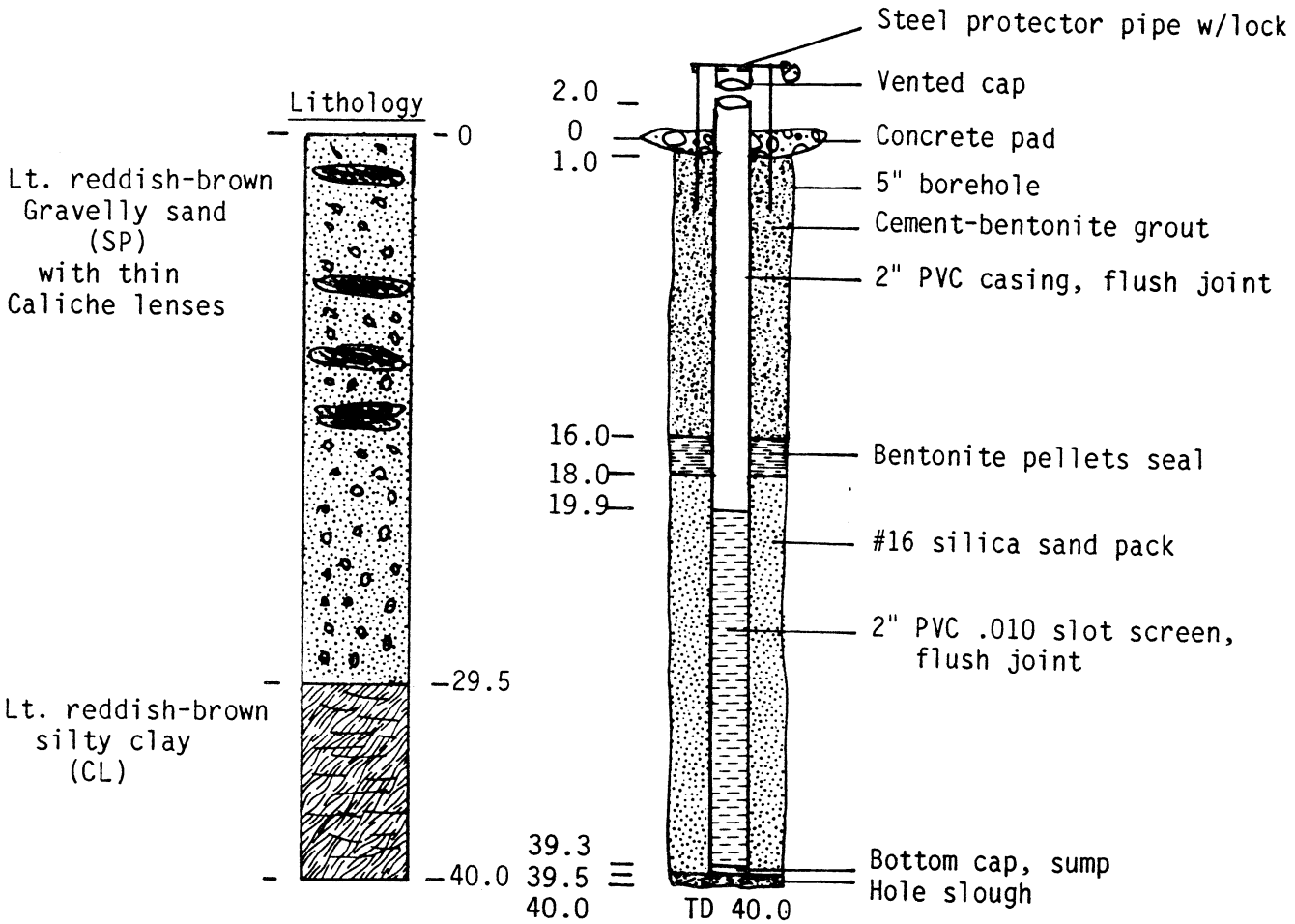

Date Drilled: 12/17/86
Drilled By: Mooney Drilling
Drilling Method: Rotary Wash, Bentonite
Logged By: W. M. Goodman, KM

WELL CONSTRUCTION DIAGRAM
WELL M-70
HENDERSON, NEVADA

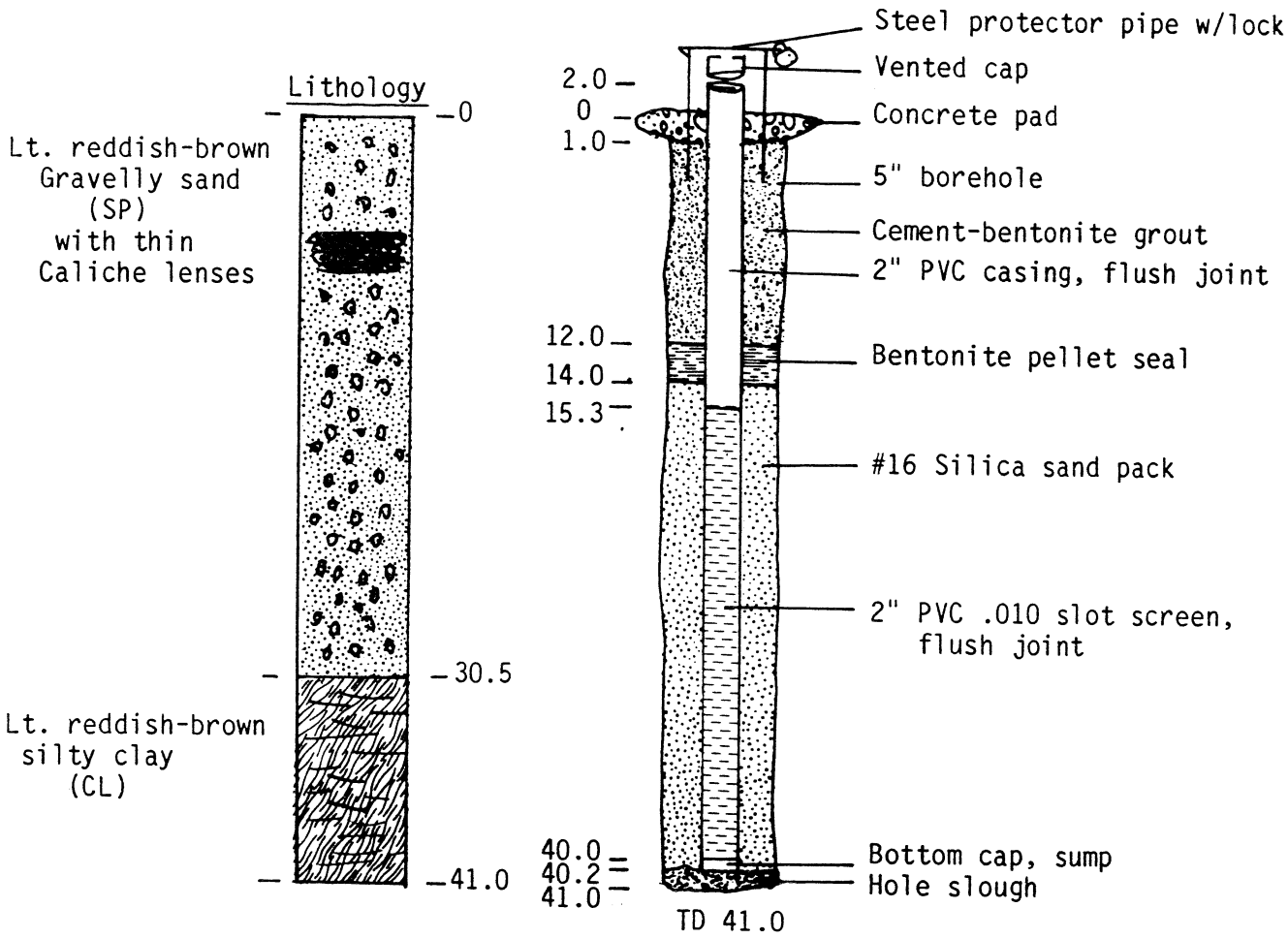

Date Drilled: 12/16/86
Drilled By: Mooney Drilling
Drilling Method: Rotary Wash, Bentonite
Logged By: W. M. Goodman, KM

WELL CONSTRUCTION DIAGRAM
WELL M-71
HENDERSON, NEVADA

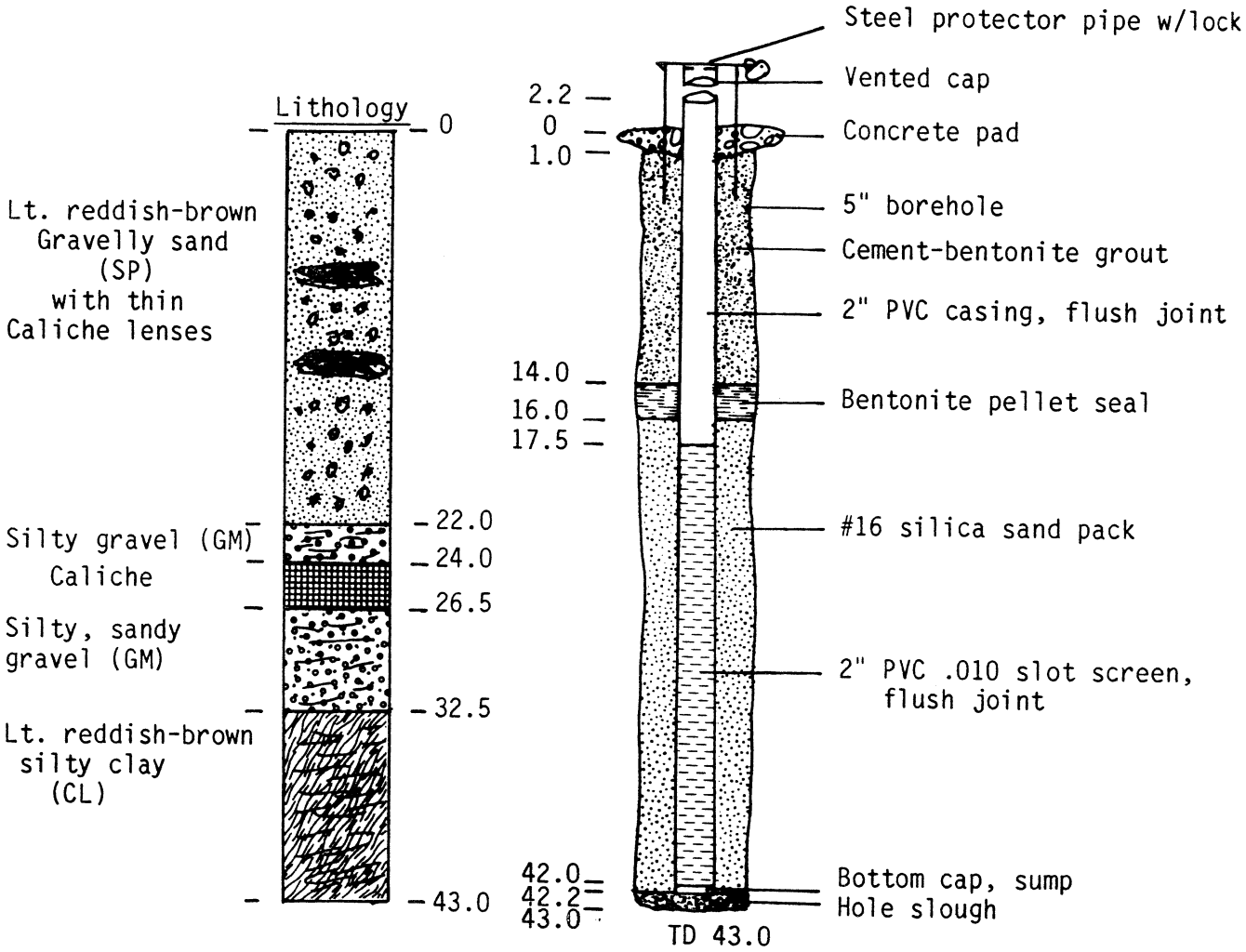

Date Drilled: 12/16/86
Drilled By: Mooney Drilling
Drilling Method: Rotary Wash, Bentonite
Logged By: W. M. Goodman, KM

WELL CONSTRUCTION DIAGRAM
WELL M-72
HENDERSON, NEVADA

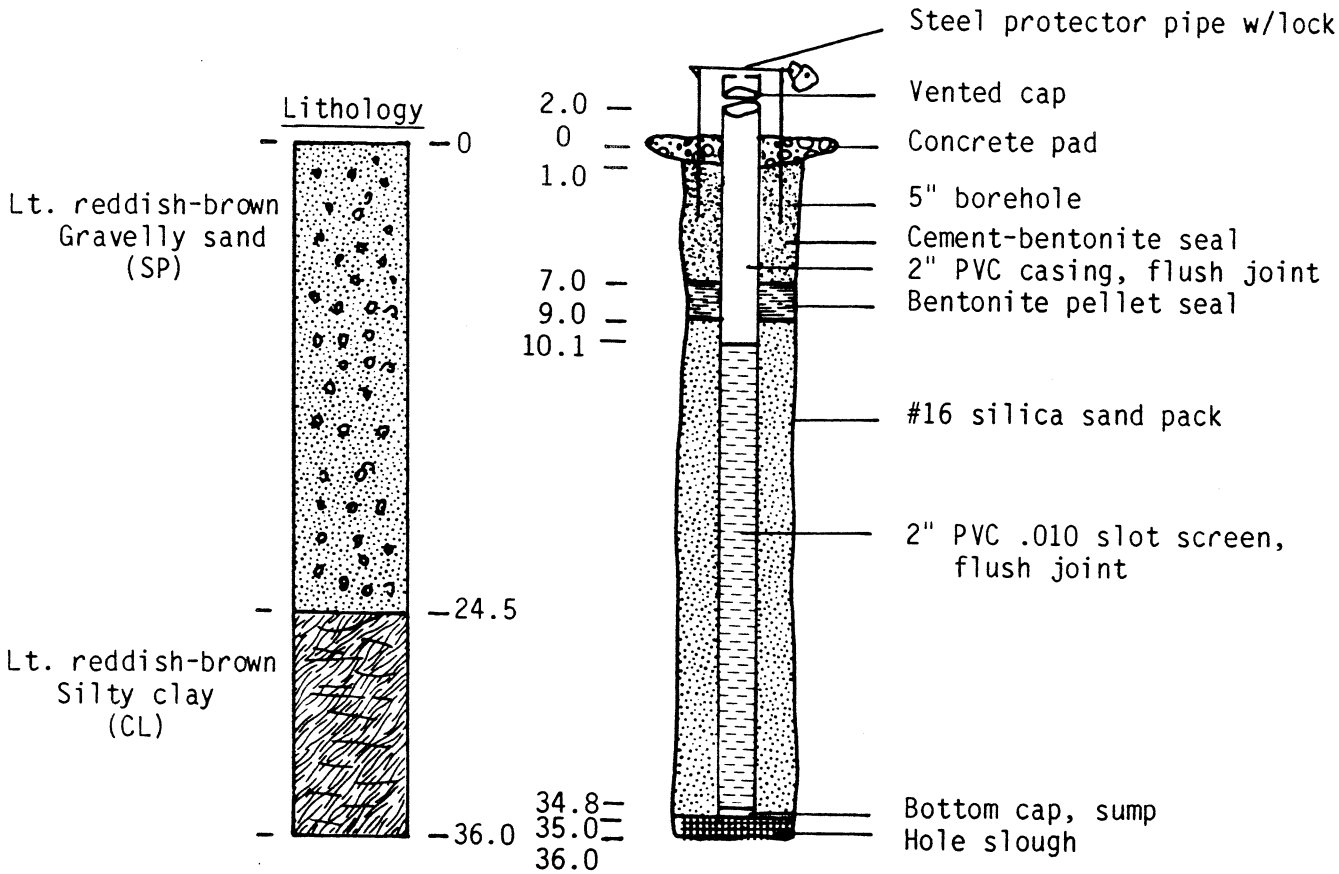

Date Drilled: 12/16/86
Drilled By: Mooney Drilling
Drilling Method: Rotary Wash, Bentonite
Logged By: W. M. Goodman, KM

WELL CONSTRUCTION DIAGRAM
WELL M-73
HENDERSON, NEVADA

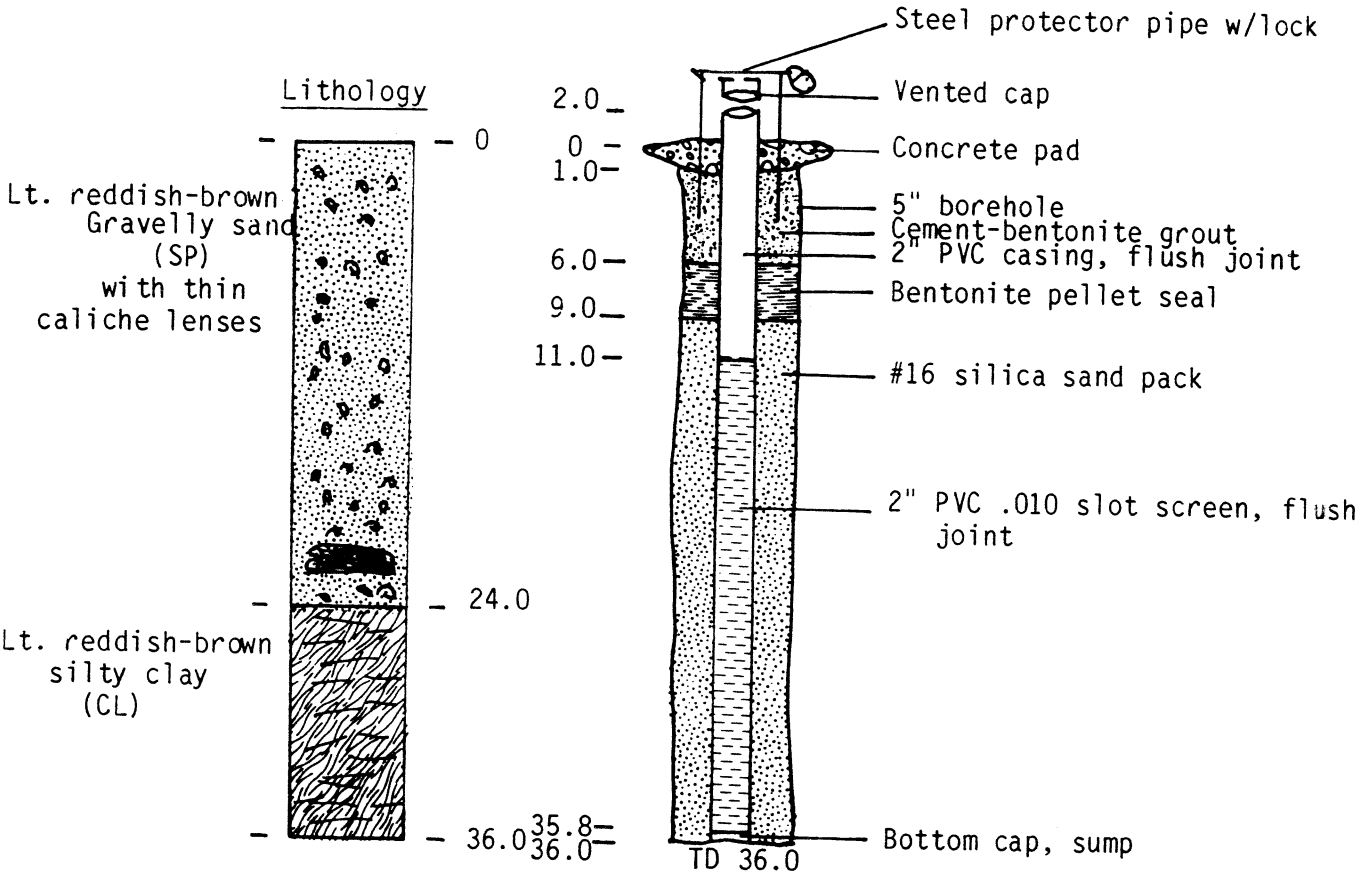

Date Drilled: 12/15/86
Drilled By: Mooney Drilling
Drilling Method: Rotary Wash, Bentonite
Logged By: W. M. Goodman, KM

WELL CONSTRUCTION DIAGRAM
WELL M-74
HENDERSON, NV

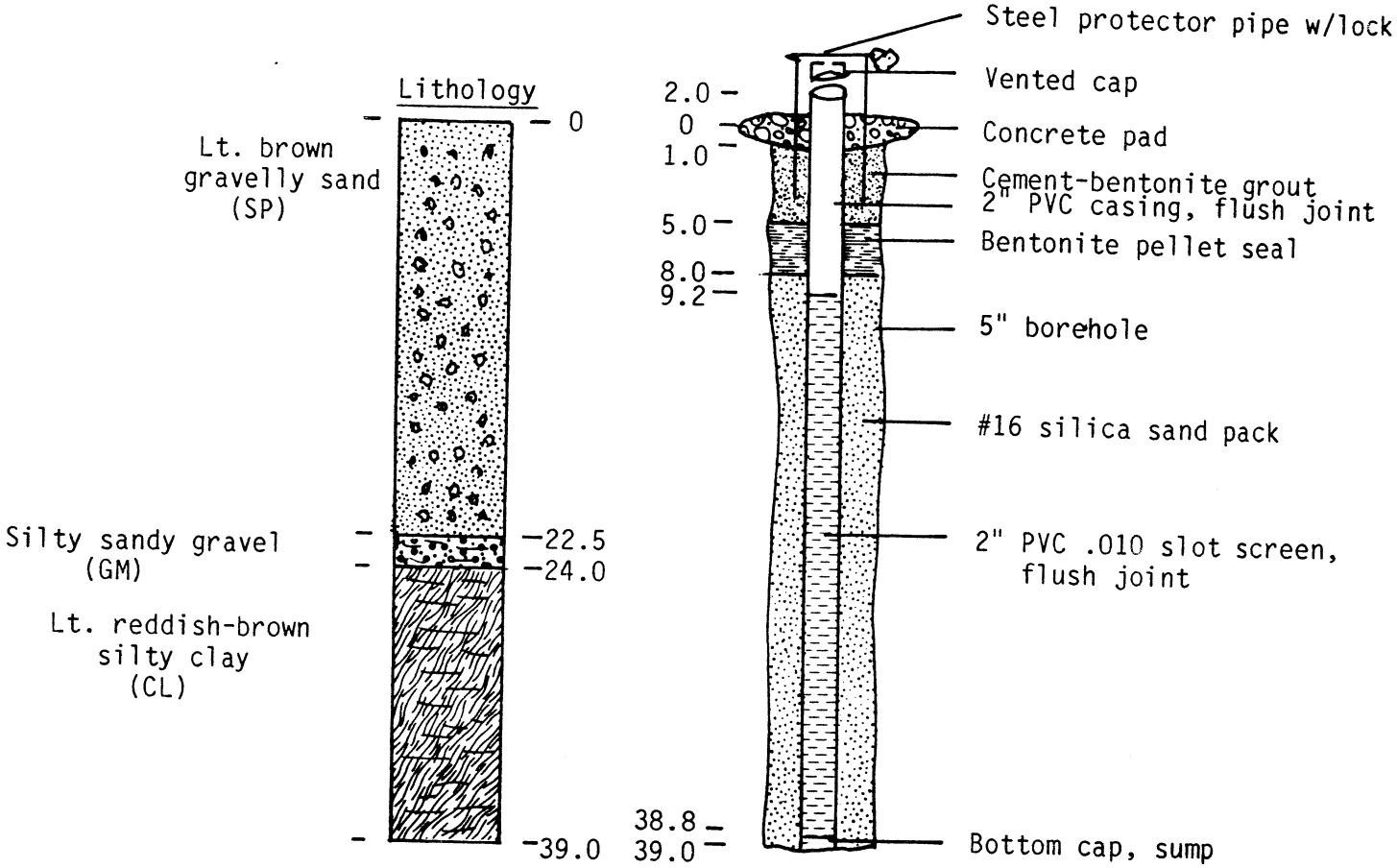

Date Drilled: 12-11-86
Drilled By: Mooney Drilling
Drilling Method: Rotary Wash, Bentonite
Logged By: W. M. Goodman, KM

LITHOLOGY AND WELL COMPLETION DIAGRAM

Elev. (Feet)	Depth (Feet)	Description	Graphic Log	"USC"	PMT / TSF / "N"	Sample No	Sample Depth	Sample Rec.	WELL COMPLETION
	0	Fne to Med Snd, Slty, Wel Graded, Drk Reddish Brwn		SW-SM	16	1	5, 6		2.4, 1.9
	10	Tan to Red-Brown			24	2	10, 11		
					80	3	15, 16		
	20				48	4	20, 21		
		Coarse, Partly Cemented, Brown			50/3"	5	25, 26		28.0
	30	Silty Snd, Fine, Red-Brwn			50	6	30, 31		31.0
					50/2" Rock	7	35, 36		34.6
	39	White Fne Silty Sand 41.15							
	40	Sndy Slt, Red-Brwn			16	8	40, 41		
	42	Slty Fne Snd, Tan-Brwn			15	9	45, 46		
	48	Clayey Slt, Tan-Brwn, Soft to Firm		ML	8	10	50, 51		49.3
	50								51.5

TD=51.5'

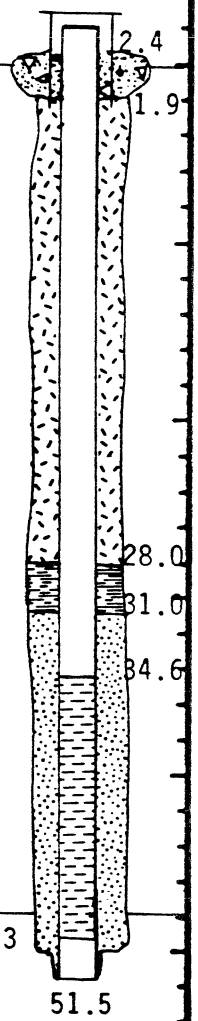

2" PVC in 5" Hole
2.16' Sampling Cup
14.7' PVC Screen
.010 Factory Slotted
#12 Mesh Silica Sand
4" Steel Protector Pipe
Grout, Bentonite Seal,
Concrete to Spec's

EXPLANATION

- Standard Penetration Test
- Disturbed Sample
- Undisturbed Sample
- Water Table (24 Hour)
- Water Table (Time of Boring)
- PMT Pressuremeter Test - Undrained Strength in p.s.i. - O
- TSF P = Penetrometer Test in Tons per Square Foot - +; T = Torvane Test in Tons per Square Foot - X
- "N" # Number of Blows per Foot - Standard Penetration Test - ●
- No. Identifies the Sample by Number and Symbols
- Depth Actual Depth to Top and Bottom of Sample Interval
- Rec. Actual Length of Recovered Sample in Feet

* - Note Conversion From Nonstandard Penetration Tests

KERR-McGEE CORPORATION
HYDROLOGY DEPARTMENT

BORING NUMBER M-75

Date Drilled 8-20-87
Drilling Method Rotary Wash
Drilled By Mooney Drilling
Logged By J. Lux
Checked By
Approved By

Page of

T-2513

LITHOLOGY AND WELL COMPLETION DIAGRAM

Elev. (Feet)	Depth (Feet)	Description	Geologic Log	"USC"	Blow/Foot	Sample No	Sample Depth	Sample Rec.	WELL COMPLETION
	0	Gry & Brwn Snd, Well-Graded, Angular, Dry				1	5 6		3.2 2.0
	10	Denser Same w/Some Gravel				2	10 11		
		Gravel up to 2"		SW		3	15 16		
	20	Snd, Med to Coarse, Well-Graded, Partially Cemente				4	20 21		
		Slty Snd, Brwn, Fne, Well Graded, No Cement, Dry, Some Coarse Snd or Grvl				5	25 26		
	30	Snds Coarser, Well-Cemented at Base of Sample				6	30 31		31.0
	35.5	Coarse Blk & Brwn Snd/Grvl							33.7
39.0' ▼	37.0	Tan Slty Fne Snd, Dry, Some Clay, Firm				7	35 36		34.6
	40	Clayey Slt, Tan-Brwn, Soft to Firm, Moist, Low Plast.		ML		8	40 41		
		TD = 51.43'				9	45 46		49.26
	50					10	50 51		51.43

2" PVC in 5" Hole
2.16' Sampling Cup
14.7' PVC Screen
.010 Factory Slotted
#12 Mesh Silica Sand
4" Steel Protector Pipe
Grout, Bentonite Seal,
Concrete to Spec's

EXPLANATION

- Standard Penetration Test
- Disturbed Sample
- Undisturbed Sample
- Water Table (24 Hour)
- Water Table (Time of Boring)
- PMT Pressuremeter Test - Undrained Strength in p.s.i. - O
- TSF P= Penetrometer Test in Tons per Square Foot - +
T= Torvane Test in Tons per Square Foot - X
- "N" or # Number of Blows per Foot - Standard Penetration Test - ●
- No. Identifies the Sample by Number and Symbols
- Depth Actual Depth to Top and Bottom of Sample Interval
- Rec. Actual Length of Recovered Sample in Feet

- Note Conversion From Nonstandard Penetration Tests

KERR-McGEE CORPORATION
HYDROLOGY DEPARTMENT

BORING NUMBER M-76

Date Drilled 8-21-87
Drilling Method Rotary Wash
Drilled By Mooney Drilling
Logged By J. Lux
Checked By
Approved By

Page 1 of 1

T-2513

LITHOLOGY AND WELL COMPLETION DIAGRAM

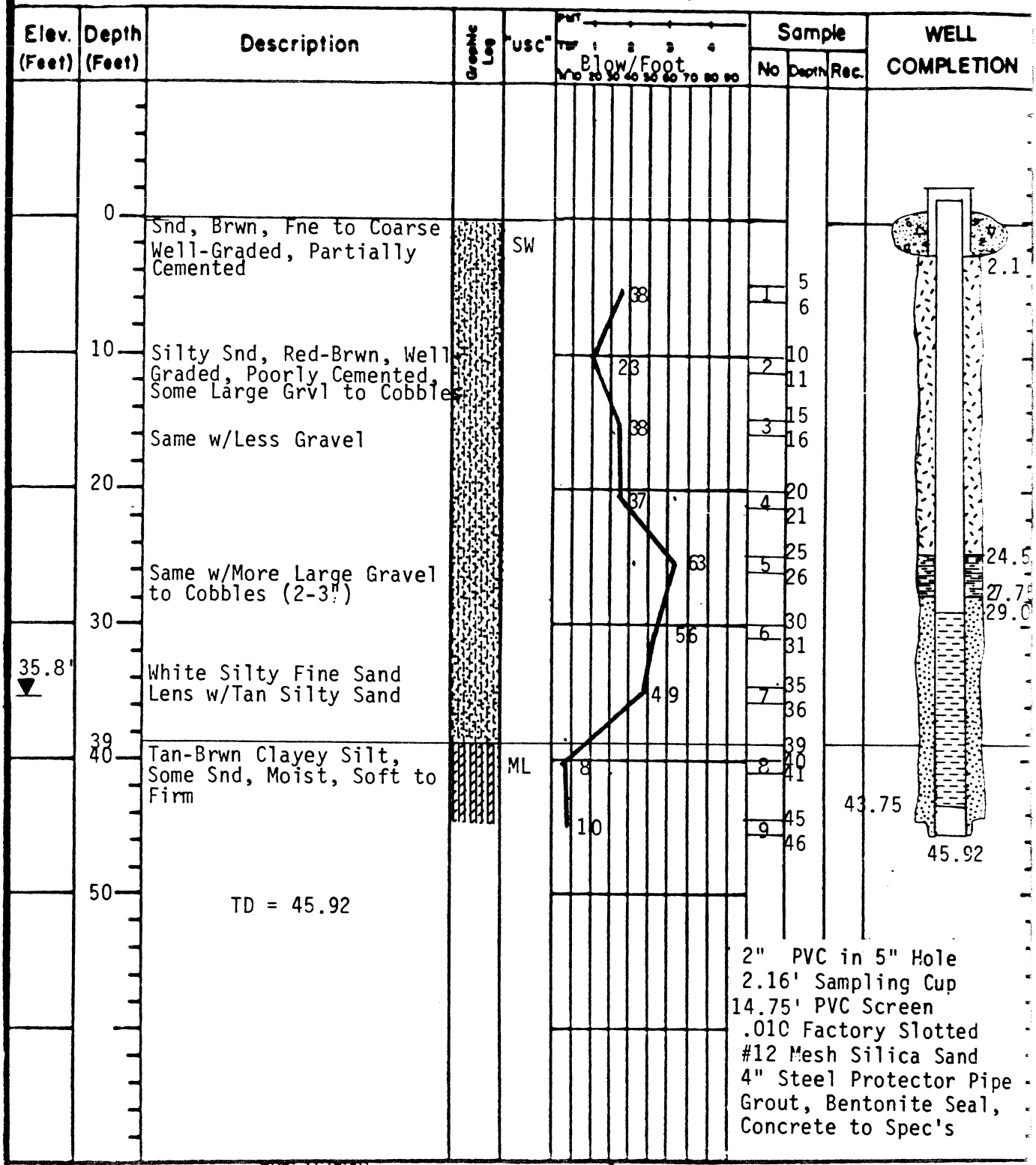

EXPLANATION

- Standard Penetration Test
- Disturbed Sample
- Undisturbed Sample
- Water Table (24 Hour)
- Water Table (Time of Boring)
- PMT — Pressuremeter Test - Undrained Strength in p.s.i. - O
- TSF — P = Penetrometer Test in Tons per Square Foot - +; T = Torvane Test in Tons per Square Foot - X
- "N" = Number of Blows per Foot - Standard Penetration Test - ●
- No. — Identifies the Sample by Number and Symbols
- Depth — Actual Depth to Top and Bottom of Sample Interval
- Rec. — Actual Length of Recovered Sample in Feet

* - Note Conversion From Nonstandard Penetration Tests

KERR-McGEE CORPORATION
HYDROLOGY DEPARTMENT

BORING NUMBER M-77

Date Drilled 8-20-87
Drilling Method Rotary Wash
Drilled By Mooney Drilling
Logged By J. Lux
Checked By
Approved By

LITHOLOGY AND WELL COMPLETION DIAGRAM

Elev. (Feet)	Depth (Feet)	Description	Geologic Log	"USC"	Blow/Foot	Sample No	Sample Depth	Sample Rec.	WELL COMPLETION
	0								
		Brwn to Tan Snd w/Grvel, Med to Coarse, Dry, Well-Graded, Partially Cement-Some Silt		SW	5 8	1	5 6		
	10	More Cementation			6 5	2	10 11		
19.5' ▼		Drk Brwn, Fine to Coarse Snd, w/Grvl, Dry, Well-Graded, No Cement			3 8	3	15 16		
	20				10		20 21		
	23	Cemented							
		Coarse Snd & Grvl, on Top of Tan-Brwn Slty Snd, Wet Hard, Partially Cemented			50/4"	4	25 26		
	30	Drk Brwn Slty Med/Cors Snd					30		
	31.5	Lgt Brwn Clayey Slt, Moist, Soft to Firm		ML	50/2"	5	31		
					7	6	35 36		
	40	Same w/More Clay (50-50)			4	7	40 41		
		TD = 43.59							
	50								

WELL COMPLETION:
- 3.0
- 1.88
- 2.0
- 10.3
- 14.0
- 21.49
- 41.49
- 43.59

4" PVC in 5" Hole
2.16' Sampling Cup
20.0' PVC Screen
.010 Factory Slotted
#12 Mesh Silica Sand
4" Steel Protector Pipe
Grout, Bentonite Seal,
Concrete to Spec's

EXPLANATION

- Standard Penetration Test
- Disturbed Sample
- Undisturbed Sample
- Water Table (24 Hour)
- Water Table (Time of Boring)
- PMT Pressuremeter Test - Undrained Strength in p.s.i. - O
- TSF P = Penetrometer Test in Tons per Square Foot - +
  T = Torvane Test in Tons per Square Foot - X
- "N" # Number of Blows per Foot - Standard Penetration Test - ●
- No. Identifies the Sample by Number and Symbols
- Depth Actual Depth to Top and Bottom of Sample Interval
- Rec. Actual Length of Recovered Sample in Feet

- Note Conversion From Nonstandard Penetration Tests

KERR-McGEE CORPORATION
HYDROLOGY DEPARTMENT

BORING NUMBER M-78

Date Drilled 8-26-87
Drilling Method Rotary Wash
Drilled By Mooney Drilling
Logged By J. Lux
Checked By
Approved By

LITHOLOGY AND WELL COMPLETION DIAGRAM

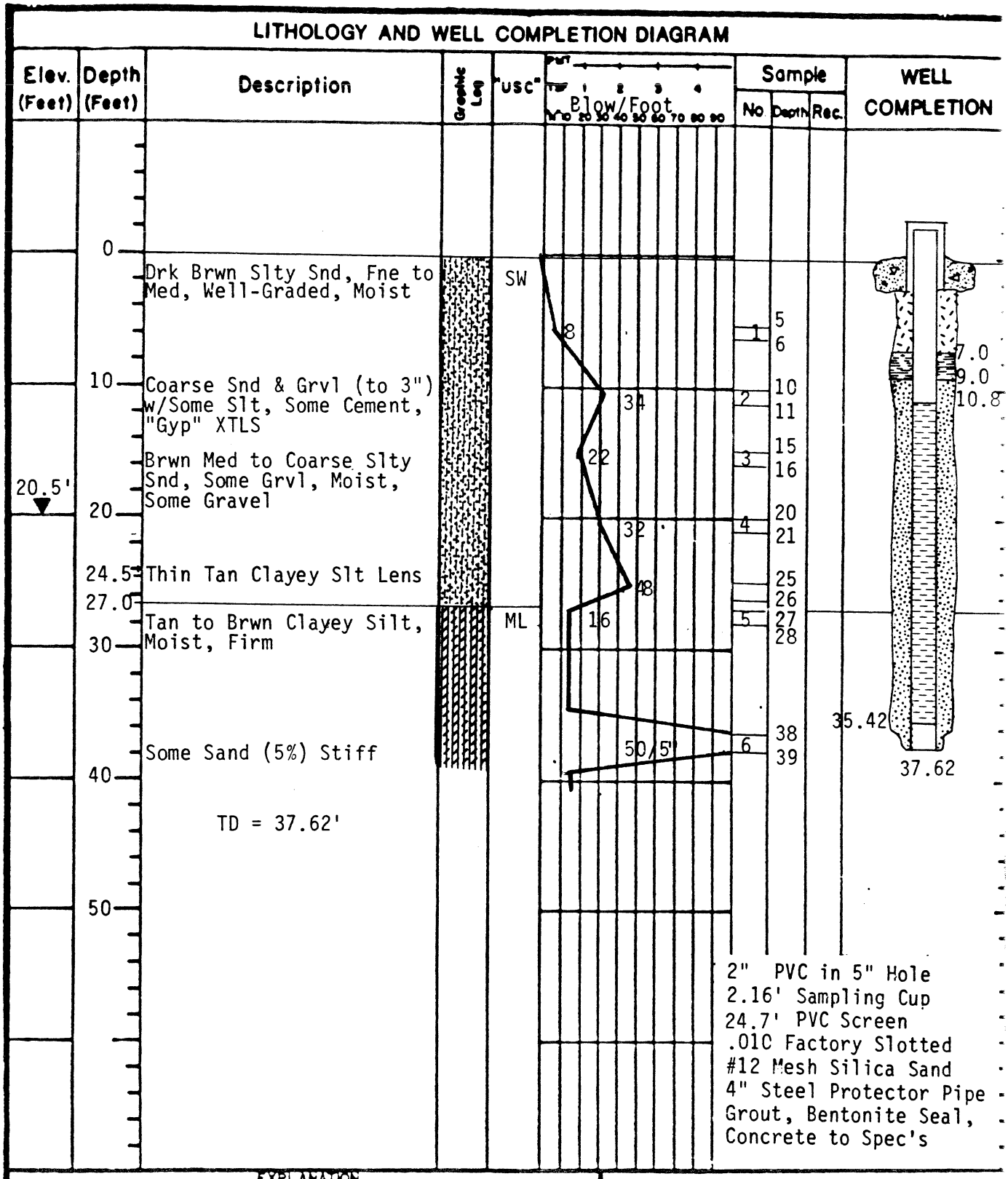

EXPLANATION

- Standard Penetration Test
- Disturbed Sample
- Undisturbed Sample
- Water Table (24 Hour)
- Water Table (Time of Boring)
- PMT Pressuremeter Test - Undrained Strength in p.s.i. - ○
- TSF P - Penetrometer Test in Tons per Square Foot - +
  T - Torvane Test in Tons per Square Foot - X
- "N" = Number of Blows per Foot - Standard Penetration Test - ●
- No. Identifies the Sample by Number and Symbols
- Depth Actual Depth to Top and Bottom of Sample Interval
- Rec. Actual Length of Recovered Sample in Feet

* - Note Conversion From Nonstandard Penetration Tests

KERR-McGEE CORPORATION
HYDROLOGY DEPARTMENT

BORING NUMBER M-79

Date Drilled 8-21-87
Drilling Method Rotary Wash
Drilled By Mooney Drilling
Logged By J. Lux
Checked By
Approved By

LITHOLOGY AND WELL COMPLETION DIAGRAM

Elev. (Feet)	Depth (Feet)	Description	Graphic Log	USC	Blow/Foot	Sample No	Sample Depth	Sample Rec.	WELL COMPLETION
	0	Brwn Med to Coarse Snd w/Slt, Dry, Well-Graded		SW	65	1	5 6		1.8 2.3
	10	Same w/Cementation			50/4"	2	10 11		6.8 9.2 11.5
		Coarse Snd & Grvl w/Slt, Some Cementing			51	3	15 16		
21.8	20	Tan Brwn Slty Snd, Wet Firm			20	4	20 21		
		White Silty Sand Lens							
		Tan Brwn Fne to Med Snd, Wet, Well-Graded, Cemented			56	5	25 26		
	30				50/8"		30 31		
		Lgt Brwn Clayey Silt, Wet Soft		ML	6	6	32 35 36		
	40	Same, w/Small "Gyp" XTLS			7	7	42 43		41.53 43.69
		TD = 43.69							
	50								

4" PVC in 5" Hole
2.16' Sampling Cup
30.0' PVC Screen
.010 Factory Slotted
#12 Mesh Silica Sand
4" Steel Protector Pipe
Grout, Bentonite Seal,
Concrete to Spec's

EXPLANATION

- Standard Penetration Test
- Disturbed Sample
- Undisturbed Sample
- Water Table (24 Hour)
- Water Table (Time of Boring)
- PMT Pressuremeter Test - Undrained Strength in p.s.i. - O
- TSF P = Penetrometer Test in Tons per Square Foot - +
  T = Torvane Test in Tons per Square Foot - X
- "N" = Number of Blows per Foot - Standard Penetration Test - ●
- No. Identifies the Sample by Number and Symbols
- Depth Actual Depth to Top and Bottom of Sample Interval
- Rec. Actual Length of Recovered Sample in Feet

* - Note Conversion From Nonstandard Penetration Tests

KERR-McGEE CORPORATION
HYDROLOGY DEPARTMENT

BORING NUMBER M-80

Date Drilled 8-26-87
Drilling Method Rotary Wash
Drilled By Mooney Drilling
Logged By J. Lux
Checked By
Approved By

P&A

LITHOLOGY AND WELL COMPLETION DIAGRAM

Elev. (Feet)	Depth (Feet)	Description	Graphic Log	"USC"	Blow/Foot (PMT, TSF, 1, 2, 3, 4; 10 20 30 40 50 60 70 80 90)	Sample No	Sample Depth	Sample Rec.	WELL COMPLETION
	0	Tan Snd w/10% Gravel, Dry Well-Sorted		SW					2.9
		Brwn Snd, Some Grvel, Well-Graded, Some Cementation			69	1	5, 6		1.8, 4.75
	10				50/5"	2	10, 11		8.58, 11.22
		Coarser w/More Gravel & Some Cobbles			39		15, 16		
	20	White Clyey Slty Snd Lens			50/3"	3	20, 21, 21.5		
		Brwn & Red-Brwn Coarse Snd, Well-Graded		10			25, 26, 27		
	30 / 31.5	Lgt Brwn Clyey Slt, Moist to Wet, Soft to Firm, 70% Silt, 30% Clay		ML	6	4	32, 33		
					10	5	37, 38		
	40	More Clay 50% Silt, 50% Clay			4	6	42, 43		40.72
		TD = 42.88'							42.88
	50								

2" PVC in 5" Hole
2.16' Sampling Cup
29.5' PVC Screen
.010 Factory Slotted
#12 Mesh Silica Sand
4" Steel Protector Pipe
Grout, Bentonite Seal,
Concrete to Spec's

EXPLANATION

- Standard Penetration Test
- Disturbed Sample
- Undisturbed Sample
- Water Table (24 Hour)
- Water Table (Time of Boring)
- PMT Pressuremeter Test - Undrained Strength in p.s.i. - O
- TSF P = Penetrometer Test in Tons per Square Foot - +; T = Torvane Test in Tons per Square Foot - X
- "N" * Number of Blows per Foot - Standard Penetration Test - ●
- No. Identifies the Sample by Number and Symbols
- Depth Actual Depth to Top and Bottom of Sample Interval
- Rec. Actual Length of Recovered Sample in Feet

* - Note Conversion From Nonstandard Penetration Tests

KERR-McGEE CORPORATION
HYDROLOGY DEPARTMENT

BORING NUMBER M-81

Date Drilled 8-21-87
Drilling Method Rotary Wash
Drilled By Mooney Drilling
Logged By J. Lux
Checked By
Approved By

SOIL BORING LOG KM—5655-A

KERR-McGEE CORPORATION Hydrology Dept. Engineering Services	KM SUBSIDIARY CHEMICAL	LOCATION HENDERSON	BORING NUMBER M-81A

DEPTH IN FEET	LITHOLOGIC DESCRIPTION	GRAPHIC LOG	UNIFIED SOIL FIELD CLASS.	BLOWS PER FOOT	PID (ppm)	SOIL SAMPLE NO.	SOIL SAMPLE TYPE	SOIL SAMPLE DEPTH	SOIL SAMPLE REC.	REMARKS OR FIELD OBSERVATIONS
0	SAND & GRAVEL									BOREHOLE LOGGED FROM ROTARY CUTTINGS
10										
20	CLAY									
30										
33										
40	TD 40'									

EXPLANATION

- ▼ Water Table (24 Hour)
- ▽ Water Table (Time of Boring)
- PID Photoionization Detection (ppm)
- NO. Identifies Sample by Number
- TYPE Sample Collection Method

SPLIT-BARREL; AUGER; ROCK CORE; THIN-WALLED TUBE; CONTINUOUS SAMPLER; NO RECOVERY

- DEPTH Depth Top and Bottom of Sample
- REC. Actual Length of Recovered Sample in Feet

GRAPHIC LOG LEGEND

CLAY; SILT; SAND; GRAVEL; SILTY CLAY; CLAYEY SILT; DEBRIS FILL; HIGHLY ORGANIC (PEAT); SANDY CLAY; CLAYEY SAND; _____; _____

DATE DRILLED	PAGE
8/23/95	1 of 1

DRILLING METHOD: ROTARY

DRILLED BY: THOMPSON DRILLING CO.

LOGGED BY: THOMPSON DRILLING CO.

EXISTING GRADE ELEVATION (FT. AMSL):

LOCATION OR GRID COORDINATES:

KERR-McGEE CORPORATION
HYDROLOGY DEPARTMENT
MONITORING WELL INSTALLATION DIAGRAM

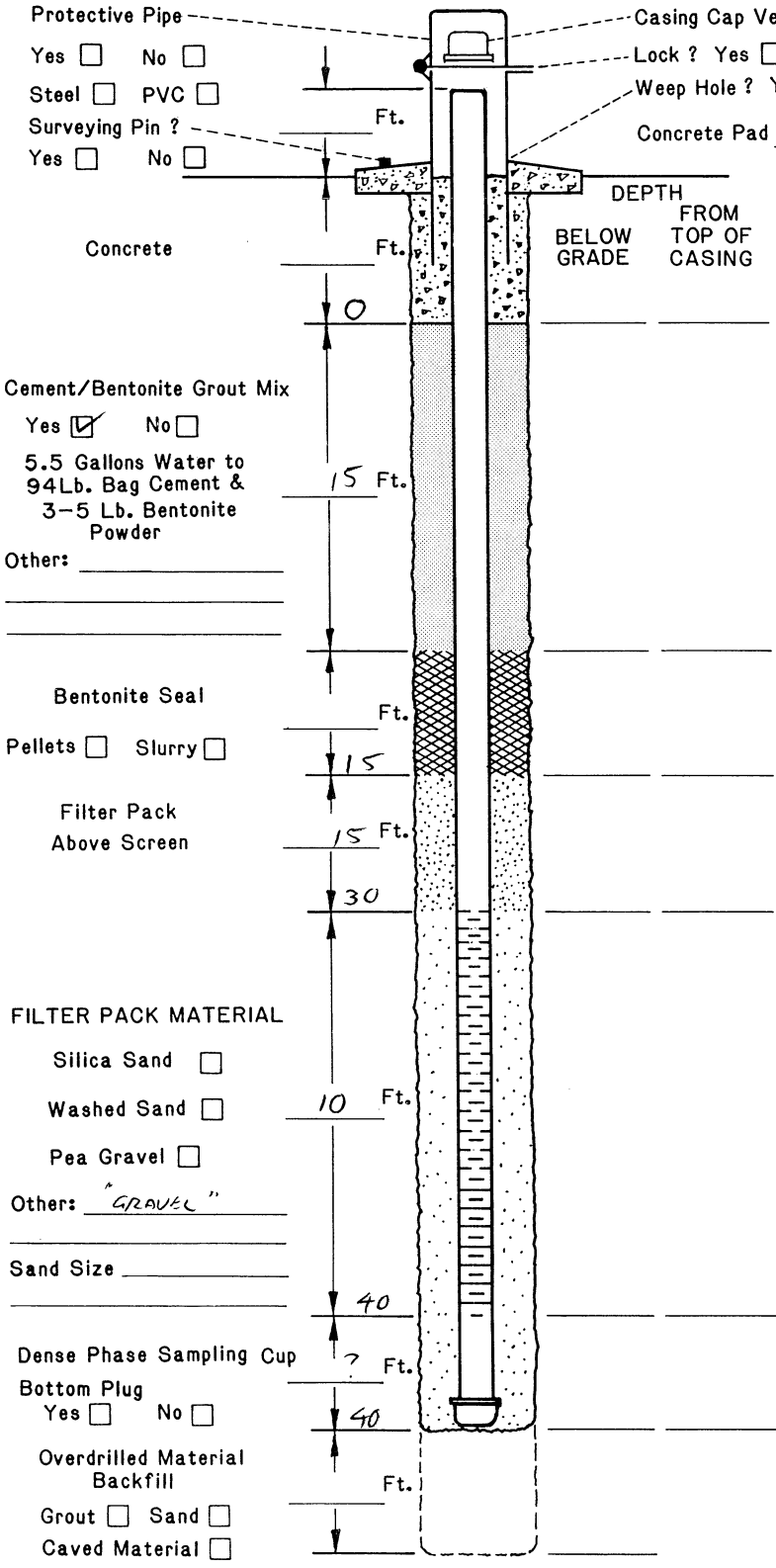

DRILLING INFORMATION:

1. Borehole Diameter= 7-7/8 Inches.
2. Were Drilling Additives Used ? Yes ☐ No ☑
   Revert ☐ Bentonite ☐ Water ☐
   Solid Auger ☐ Hollow Stem Auger ☐
3. Was Outer Steel Casing Used ? Yes ☐ No ☑
   Depth= _____ to _____ Feet.
4. Borehole Diameter for Outer Casing _____ Inches.

WELL CONSTRUCTION INFORMATION:

1. Type of Casing: PVC ☑ Galvanized ☐ Teflon ☐
   Stainless ☐ Other _____
2. Type of Casing Joints: Screw-Couple ☑ Glue-Couple ☐ Other _____
3. Type of Well Screen: PVC ☑ Galvanized ☐
   Stainless ☐ Teflon ☐ Other _____
4. Diameter of Casing and Well Screen:
   Casing 3 Inches, Screen 3 Inches.
5. Slot Size of Screen: 0,020
6. Type of Screen Perforation: Factory Slotted ☑
   Hacksaw ☐ Drilled ☐ Other _____
7. Installed Protector Pipe w/Lock: Yes ☐ No ☐

WELL DEVELOPMENT INFORMATION:

1. How was Well Developed ? Bailing ☐ Pumping ☐
   Air Surging (Air or Nitrogen) ☐ Other _____
2. Time Spent on Well Development ?
   _____ / _____ Minutes/Hours
3. Approximate Water Volume Removed ? _____ Gallons
4. Water Clarity Before Development ? Clear ☐
   Turbid ☐ Opaque ☐
5. Water Clarity After Development ? Clear ☐
   Turbid ☐ Opaque ☐
6. Did Water have Odor ? Yes ☐ No ☐
   If Yes, Describe _____
7. Did Water have any Color ? Yes ☐ No ☐
   If Yes , Describe _____

WATER LEVEL INFORMATION:

Water Level Summary (From Top of Casing)

During Drilling _____ Ft. Date _____
Before Development 33 Ft. Date 8/24/95
After Development _____ Ft. Date _____

Driller/Firm THOMPSON DRILLING CO. Drill Rig Type — Date Installed 8/24/95
Drill Crew " " Well No. M-81A Kerr-McGee Hydrologist —

P-1A

LITHOLOGY AND WELL COMPLETION DIAGRAM

Elev. (Feet)	Depth (Feet)	Description	Graphic Log	USC	Blow/Foot	Sample No	Sample Depth	Sample Rec.	WELL COMPLETION
	0	Drk Brwn Fne to Coarse Snd, Well-Graded, Dry, Loose		SW-SM	7	1	5		2.3
							6		1.9
		Very Dense @8'							7.0
	10	Coarser w/Some Gravel Very Dense, Well-Cemented From 12.5' to 13.5'			50/5"	2	10		10.0
							11		11.1
		Tan Brwn Slty Fine Sand, Moist, Firm, 15% Silt			43	3	15		
	19.5						16		
	20	Tan Brwn Fne to Coarse Snd Then White-Gray Slty Fne Snd, Drk Brwn Coarse Snd					20		
					64	4	21		
	22.5	Top of Muddy Creek		ML					
		Lgt Brwn Clayey Silt, Moist, Soft to Firm			5	5	25		
							26		
	30	TD = 33.3'			5	6	32		31.14
							33		33.30
	40								
	50								

2" PVC in 5" Hole
2.16' Sampling Cup
19.67' PVC Screen
.010 Factory Slotted
#12 Mesh Silica Sand
4" Steel Protector Pipe
Grout, Bentonite Seal,
Concrete to Spec's

EXPLANATION

- Standard Penetration Test
- Disturbed Sample
- Undisturbed Sample
- Water Table (24 Hour)
- Water Table (Time of Boring)
- PMT Pressuremeter Test - Undrained Strength in p.s.i. - O
- TSF P - Penetrometer Test in Tons per Square Foot - +
  T - Torvane Test in Tons per Square Foot - X
- "N" = Number of Blows per Foot - Standard Penetration Test - ●
- No. Identifies the Sample by Number and Symbols
- Depth Actual Depth to Top and Bottom of Sample Interval
- Rec. Actual Length of Recovered Sample in Feet

= Note Conversion From Nonstandard Penetration Tests

KERR-McGEE CORPORATION
HYDROLOGY DEPARTMENT

BORING NUMBER M-82

Date Drilled 8-24-87
Drilling Method Rotary Wash
Drilled By Mooney Drilling
Logged By J. Lux
Checked By
Approved By

Page 1 of 1

P.A 1 of 1
6/03

SOIL BORING LOG KM—5655-A

KERR-McGEE CORPORATION Hydrology Dept. Engineering Services	KM SUBSIDIARY CHEMICAL	LOCATION HENDERSON, NV.	BORING NUMBER M-82A

DEPTH IN FEET	LITHOLOGIC DESCRIPTION	GRAPHIC LOG	UNIFIED SOIL FIELD CLASS.	BLOWS PER FOOT	PID (ppm)	SOIL SAMPLE NO.	SOIL SAMPLE TYPE	SOIL SAMPLE DEPTH	SOIL SAMPLE REC.	REMARKS OR FIELD OBSERVATIONS
0	SAND & GRAVEL									BOREHOLE LOGGED FROM ROTARY CUTTINGS
10										
	SAND & GRAVEL									
20										
27'			▽							
30										
35										
	TD 35'									

EXPLANATION

- ▼ Water Table (24 Hour)
- ▽ Water Table (Time of Boring)
- PID Photoionization Detection (ppm)
- NO. Identifies Sample by Number
- TYPE Sample Collection Method

SPLIT-BARREL; AUGER; ROCK CORE; THIN-WALLED TUBE; CONTINUOUS SAMPLER; NO RECOVERY

- DEPTH Depth Top and Bottom of Sample
- REC. Actual Length of Recovered Sample in Feet

GRAPHIC LOG LEGEND

CLAY; SILT; SAND; GRAVEL; SILTY CLAY; CLAYEY SILT; DEBRIS FILL; HIGHLY ORGANIC (PEAT); SANDY CLAY; CLAYEY SAND

DATE DRILLED	PAGE
8/28/95	1 of 1

DRILLING METHOD: ROTARY

DRILLED BY: THOMPSON DRILLING CO.

LOGGED BY: THOMPSON DRILLING CO.

EXISTING GRADE ELEVATION (FT. AMSL)

LOCATION OR GRID COORDINATES

KERR-McGEE CORPORATION
HYDROLOGY DEPARTMENT
MONITORING WELL INSTALLATION DIAGRAM

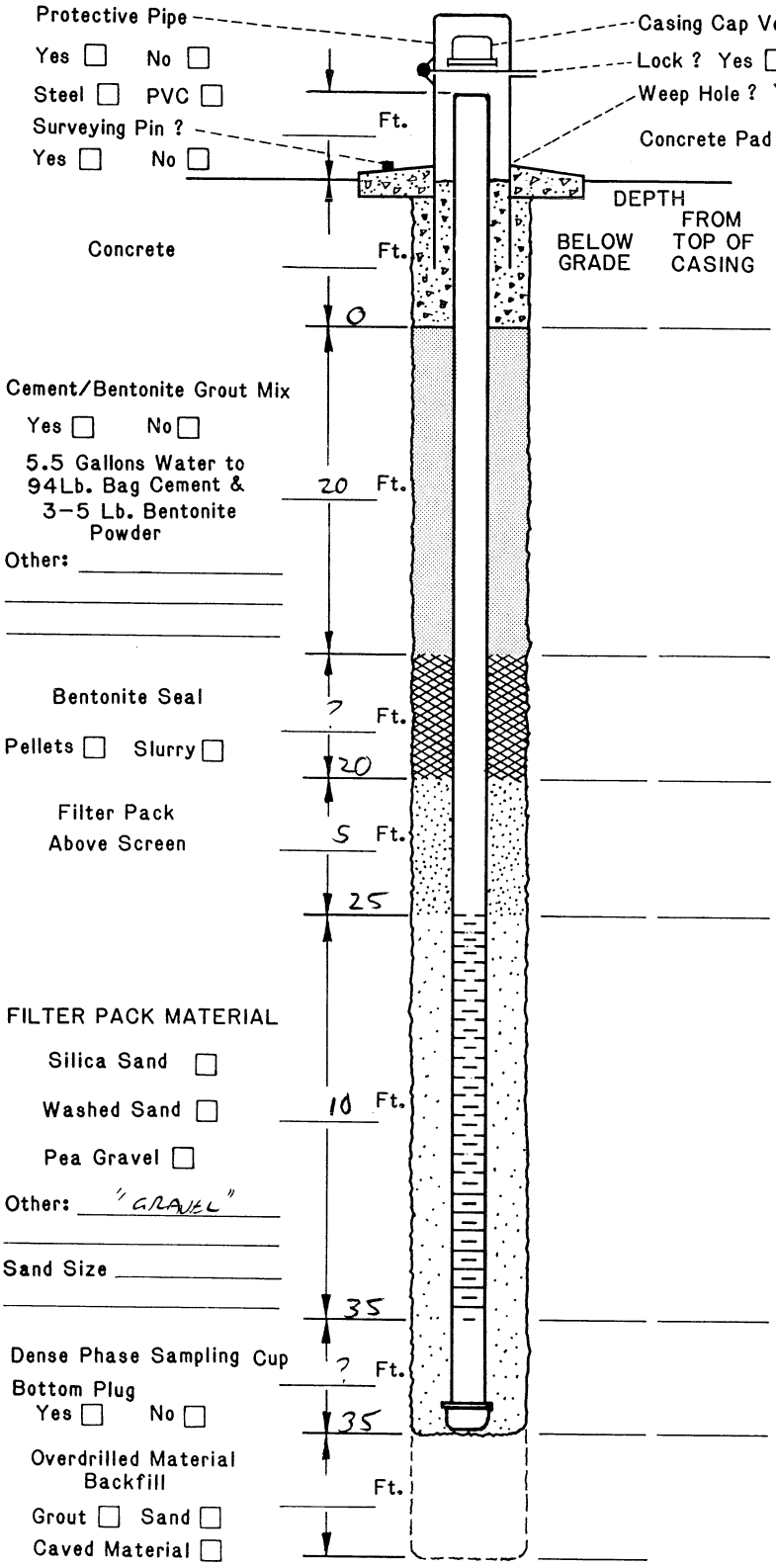

DRILLING INFORMATION:

1. Borehole Diameter= 7-7/8 Inches.
2. Were Drilling Additives Used ? Yes ☐ No ☑
   Revert ☐ Bentonite ☐ Water ☐
   Solid Auger ☐ Hollow Stem Auger ☐
3. Was Outer Steel Casing Used ? Yes ☐ No ☑
   Depth= _____ to _____ Feet.
4. Borehole Diameter for Outer Casing _____ Inches.

WELL CONSTRUCTION INFORMATION:

1. Type of Casing: PVC ☑ Galvanized ☐ Teflon ☐
   Stainless ☐ Other _____
2. Type of Casing Joints: Screw-Couple ☑ Glue-Couple ☐ Other _____
3. Type of Well Screen: PVC ☑ Galvanized ☐
   Stainless ☐ Teflon ☐ Other _____
4. Diameter of Casing and Well Screen:
   Casing 3 Inches, Screen 3 Inches.
5. Slot Size of Screen: 0.020
6. Type of Screen Perforation: Factory Slotted ☑
   Hacksaw ☐ Drilled ☐ Other _____
7. Installed Protector Pipe w/Lock: Yes ☐ No ☐

WELL DEVELOPMENT INFORMATION:

1. How was Well Developed ? Bailing ☐ Pumping ☐
   Air Surging (Air or Nitrogen) ☐ Other _____
2. Time Spent on Well Development ?
   _____ / _____ Minutes/Hours
3. Approximate Water Volume Removed ? _____ Gallons
4. Water Clarity Before Development ? Clear ☐
   Turbid ☐ Opaque ☐
5. Water Clarity After Development ? Clear ☐
   Turbid ☐ Opaque ☐
6. Did Water have Odor ? Yes ☐ No ☐
   If Yes, Describe _____
7. Did Water have any Color ? Yes ☐ No ☐
   If Yes , Describe _____

WATER LEVEL INFORMATION:

Water Level Summary (From Top of Casing)

During Drilling _____ Ft. Date _____
Before Development 27' Ft. Date 8/28/95
After Development _____ Ft. Date _____

Driller/Firm THOMPSON DRILLING CO. Drill Rig Type — Date Installed 8/28/95
Drill Crew — Well No. M-82A Kerr-McGee Hydrologist —

LITHOLOGY AND WELL COMPLETION DIAGRAM

Elev. (Feet)	Depth (Feet)	Description	Geologic Log	USC	Blow/Foot	Sample No	Sample Depth	Sample Rec.	WELL COMPLETION
	0								
		Drk Brwn Med to Coarse Snd, Well-Graded, Part. Cemented		SW-SM	50/5"	1	5 6		
	10	Many Thin Layers w/varying Cementation to 14'			43	2	10 11		
					68	3	15 16		
	17.5	Soft, Brwn Slty Fne Sand							
	20	Tan to Lgt Brwn Fne Sand, Well-Graded, Firm to Dens			55	4	20 21		
	24	White Slty Fne Sand Lens, Firm, Moist			50/5"	5	25 26		
	30	Dark Brwn Silty Sand Lgt Brwn Sandy Silt			26	6	30 31		
	32.5	Top of Muddy Creek		ML					
		Lgt Brwn Clayey Slt, Moist, Soft to Firm, 65% Silt, 35% Clay			8	7	35 36		
	40	50-50 Clay/Silt			6	8	41 42		
		TD = 42.46'							
	50								

WELL COMPLETION: 2.3; 2.2; 8.0; 10.0; 10.8; 40.30; 42.46

2" PVC in 5" Hole
2.16' Sampling Cup
29.50' PVC Screen
.010 Factory Slotted
#12 Mesh Silica Sand
4" Steel Protector Pipe
Grout, Bentonite Seal,
Concrete to Spec's

EXPLANATION

- Standard Penetration Test
- Disturbed Sample
- Undisturbed Sample
- Water Table (24 Hour)
- Water Table (Time of Boring)
- PMT — Pressuremeter Test - Undrained Strength in p.s.i. - O
- TSF — P = Penetrometer Test in Tons per Square Foot - +; T = Torvane Test in Tons per Square Foot - X
- "N" # — Number of Blows per Foot - Standard Penetration Test - ●
- No. — Identifies the Sample by Number and Symbols
- Depth — Actual Depth to Top and Bottom of Sample Interval
- Rec. — Actual Length of Recovered Sample in Feet

- Note Conversion From Nonstandard Penetration Tests

KERR-McGEE CORPORATION
HYDROLOGY DEPARTMENT

BORING NUMBER M-83

Date Drilled 8-24-87
Drilling Method Rotary Wash
Drilled By Mooney Drilling
Logged By J. Lux
Checked By
Approved By

LITHOLOGY AND WELL COMPLETION DIAGRAM

Elev. (Feet)	Depth (Feet)	Description	Graphic Log	"USC"	Blow/Foot (PMT, TSF, 1, 2, 3, 4; 10, 20, 30, 40, 50, 60, 70, 80, 90)	Sample No.	Sample Depth	Sample Rec.	WELL COMPLETION
	0								
		Brwn Med. To Coarse Snd, Well Graded, Dry, Layers Are Well Cemented		SW-SM	79	1	5, 6		
	10	Dark Brwn, Coarser, Loose			18	2	10, 11		
		Some Grvl, Partially Cem, "Gyp" Crystals to ½"			59	3	15, 16		
	20	No "Gyp", Coarse Snd w/ Some Gravel			50/5.5"	4	20, 21		
		White Sndy Silt Transition							
	24.5	Lgt Brwn Clayey Slt, Moist Soft to Firm, Some Coarse Snd to Fne Grvl at Top		ML	16	5	25, 26		
	30	Lgt Brwn Clayey Slt, Some "Gyp" Crystals			6, 5	6	30, 31		
						7	34, 35		
		TD = 36.30'							
	40								
	50								

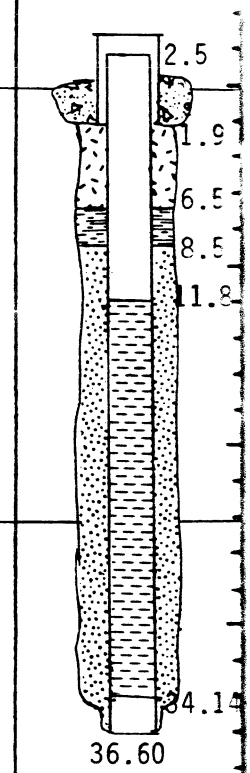

2" PVC in 5" Hole
2.16' Sampling Cup
24.50' PVC Screen
.010 Factory Slotted
#12 Mesh Silica Sand
4" Steel Protector Pipe
Grout, Bentonite Seal,
Concrete to Spec's

EXPLANATION

- Standard Penetration Test
- Disturbed Sample
- Undisturbed Sample
- Water Table (24 Hour)
- Water Table (Time of Boring)
- PMT Pressuremeter Test - Undrained Strength in p.s.i. - O
- TSF P = Penetrometer Test in Tons per Square Foot - +; T = Torvane Test in Tons per Square Foot - X
- "N" * Number of Blows per Foot - Standard Penetration Test - ●
- No. Identifies the Sample by Number and Symbols
- Depth Actual Depth to Top and Bottom of Sample Interval
- Rec. Actual Length of Recovered Sample in Feet

* - Note Conversion From Nonstandard Penetration Tests

KERR-McGEE CORPORATION
HYDROLOGY DEPARTMENT

BORING NUMBER M-84

Date Drilled 8-24-87
Drilling Method Rotary Wash
Drilled By Mooney Drilling
Logged By J. Lux
Checked By
Approved By

LITHOLOGY AND WELL COMPLETION DIAGRAM

Elev. (Feet)	Depth (Feet)	Description	Graphic Log	USC	Blow/Foot	Sample No	Sample Depth	Sample Rec.	WELL COMPLETION
	0								2.2
		Tan-Brwn Fne to Coarse Snd, Dry, Well-Graded, Partially Cemented		SW-SM	50/5.5"	1	5 6		2.2 7.1
	10	Medium to Coarse			7 6	2	10 11		9.2 10.4
					18		15 16		
	20	Dark Brwn Fne to Med Snd, Well Graded, Moist White Silty Fne Snd Layer			18	3	20 21		
		Lgt Brwn Clayey Slt, Moist, V. Frm to Stiff, Partially Cemented		ML	46	4	25 26		
	30	Soft to Firm After 26.5'							
					4	5	35 36	34.95	37.11
	40	TD = 37.11'							
	50								

2" PVC in 5" Hole
2.16' Sampling Cup
24.50' PVC Screen
.010 Factory Slotted
#12 Mesh Silica Sand
4" Steel Protector Pipe
Grout, Bentonite Seal,
Concrete to Spec's

EXPLANATION

- Standard Penetration Test
- Disturbed Sample
- Undisturbed Sample
- Water Table (24 Hour)
- Water Table (Time of Boring)
- PMT Pressuremeter Test - Undrained Strength in p.s.i. - ○
- TSF P - Penetrometer Test in Tons per Square Foot - +
  T - Torvane Test in Tons per Square Foot - X
- "N" # Number of Blows per Foot - Standard Penetration Test - ●
- No. Identifies the Sample by Number and Symbols
- Depth Actual Depth to Top and Bottom of Sample Interval
- Rec. Actual Length of Recovered Sample in Feet

- Note Conversion From Nonstandard Penetration Tests

KERR-McGEE CORPORATION
HYDROLOGY DEPARTMENT

BORING NUMBER M-85

Date Drilled 8-25-87
Drilling Method Rotary Wash
Drilled By Mooney Drilling
Logged By J. Lux
Checked By
Approved By

Page 1 of 1

T-2513

LITHOLOGY AND WELL COMPLETION DIAGRAM

Elev. (Feet)	Depth (Feet)	Description	Graphic Log	"USC"
	0			
		Lgt Brwn to Tan Fine to Med. Sand, Dry, Well-Graded, Partially Cemented		SW-SM
	10	Very Dense, Partially Cemented		
	20	Coarser Snd w/Grvl, Well-Graded, Cemented @220'		
	22.5	Brown Silty Sand		
		Dark Brwn Silty Fne to Med Sand, Well-Graded, Wet		
	28	White Silty Fine Sand		
	30	Lgt Brwn Sndy Slt, Wet Firm		
	32	Top of Muddy Creek Lgt Brwn to Tan Clayey Silt, Wet, Soft to Firm		ML
	40	TD = 43.01'		
	50			

Blow/Foot (Per 1 Foot) — 10 20 30 40 50 60 70 80 90

76 · 50/5" · 24 · 31 · 21 · 10 · 12 · 6

Sample No.	Depth	Rec.
1	5	
	6	
2	10	
	11	
	15	
	16	
3	20	
	21	
4	25	
	26	
5	30	
	31	
6	35	
	36	
7	42	
	43	

WELL COMPLETION

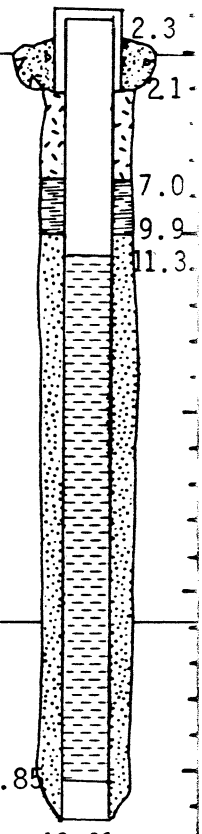

2" PVC in 5" Hole
2.16' Sampling Cup
29.50' PVC Screen
.010 Factory Slotted
#12 Mesh Silica Sand
4" Steel Protector Pipe
Grout, Bentonite Seal,
Concrete to Spec's

EXPLANATION

- Standard Penetration Test
- Disturbed Sample
- Undisturbed Sample
- Water Table (24 Hour)
- Water Table (Time of Boring)
- PMT Pressuremeter Test - Undrained Strength in p.s.i. - ○
- TSF P = Penetrometer Test in Tons per Square Foot - +
  T = Torvane Test in Tons per Square Foot - X
- "N" = Number of Blows per Foot - Standard Penetration Test - ●
- No. Identifies the Sample by Number and Symbols
- Depth Actual Depth to Top and Bottom of Sample Interval
- Rec. Actual Length of Recovered Sample in Feet

* - Note Conversion From Nonstandard Penetration Tests

KERR-McGEE CORPORATION
HYDROLOGY DEPARTMENT

BORING NUMBER M-86

Date Drilled 8-25-87
Drilling Method Rotary Wash
Drilled By Mooney Drilling
Logged By J. Lux
Checked By
Approved By

LITHOLOGY AND WELL COMPLETION DIAGRAM

Elev. (Feet)	Depth (Feet)	Description	Graphic Log	"USC"	Blow/Foot	Sample No	Sample Depth	Sample Rec.	WELL COMPLETION
	0								2.6
		Brown Fine to Med. Sand, Well-Graded, Dry, Dense		SW-SM	44	1	5 6		2.0
	10	Some Coarse Sand & Gravel			38	2	10 11		6.5
	▼				10		15 16		8.6
	20	Coarse Sand & Gravel, Lse, Saturated			22	3	20 21		9.3
		Brown, Fine Silty Snd, Wet Firm					25		
	26	White Silty Sand			31	4	26		
		Tan Med. to Coarse Snd, White to Gray Slty Fne Snd					30		
	30	Tan to Lgt Brwn Clayey Silt, Some Cementation, Some Xtls, Mst, Firm/Hard		ML	24	5	31		
		No Cement @ 36'			6	6	35 36		
	40	TD = 40.98'			6	7	40 41		38.8
									40.98
	50								

2" PVC in 5" Hole
2.16' Sampling Cup
29.50' PVC Screen
.010 Factory Slotted
#12 Mesh Silica Sand
4" Steel Protector Pipe
Grout, Bentonite Seal,
Concrete to Spec's

EXPLANATION

- Standard Penetration Test
- Disturbed Sample
- Undisturbed Sample
- Water Table (24 Hour)
- Water Table (Time of Boring)
- PMT Pressuremeter Test - Undrained Strength in p.s.i. - O
- TSF P = Penetrometer Test in Tons per Square Foot - +
  T = Torvane Test in Tons per Square Foot - X
- "N" or R Number of Blows per Foot - Standard Penetration Test - ●
- No. Identifies the Sample by Number and Symbols
- Depth Actual Depth to Top and Bottom of Sample Interval
- Rec. Actual Length of Recovered Sample in Feet

* - Note Conversion From Nonstandard Penetration Tests

KERR-McGEE CORPORATION
HYDROLOGY DEPARTMENT

BORING NUMBER M-87

Date Drilled 8-25-87
Drilling Method Rotary Wash
Drilled By Mooney Drilling
Logged By J. Lux
Checked By
Approved By

LITHOLOGY AND WELL COMPLETION DIAGRAM

Elev. (Feet)	Depth (Feet)	Description	Graphic Log	USC	Blow/Foot	Sample No	Sample Depth	Sample Rec.	WELL COMPLETION
	0	Lgt Brwn Fne/Coarse Snd w/Gravel Fill							2.75
		Tan-Brwn Fne to Med Snd, Some Coarse Snd & Grvl, Well-Graded, Partially Cemented		SW-SM	44	1	5 6		2.0 4.6 6.6 7.3
	10	Med to Coarse w/no Cement			30	2	10 11		
		Brwn Med to Coarse Snd & Grvl, Wet, Well-Graded, Loose			31	3	15 16		
	20						20		
	21.5	White Silty Fine Snd Lens			68		21		
		Drk Brwn Fne to Coarse Snd, Med Density			43	4	25 26		
	30	Lgt Brwn to Tan Clayey Silt, Wet, Soft, 15% Slt 35% Clay		ML	4	5	30 31		
					7				36.83
	40	TD = 38.99'				6	38 39		38.99
	50								

2" PVC in 5" Hole
2.16' Sampling Cup
29.5' PVC Screen
.010 Factory Slotted
#12 Mesh Silica Sand
4" Steel Protector Pipe
Grout, Bentonite Seal,
Concrete to Spec's

EXPLANATION

- Standard Penetration Test
- Disturbed Sample
- Undisturbed Sample
- Water Table (24 Hour)
- Water Table (Time of Boring)
- PMT Pressuremeter Test - Undrained Strength in p.s.i. - O
- TSF Pocketometer Test in Tons per Square Foot - +
  Torvane Test in Tons per Square Foot - X
- "N" # Number of Blows per Foot - Standard Penetration Test - ●
- No. Identifies the Sample by Number and Symbols
- Depth Actual Depth to Top and Bottom of Sample Interval
- Rec. Actual Length of Recovered Sample in Feet

- Note Conversion From Nonstandard Penetration Tests

KERR-McGEE CORPORATION
HYDROLOGY DEPARTMENT

BORING NUMBER M-88

Date Drilled 8-26-87
Drilling Method Rotary Wash
Drilled By Mooney Drilling
Logged By J. Lux
Checked By
Approved By

KERR-McGEE CORPORATION
HYDROLOGY DEPARTMENT
MONITORING WELL INSTALLATION DIAGRAM

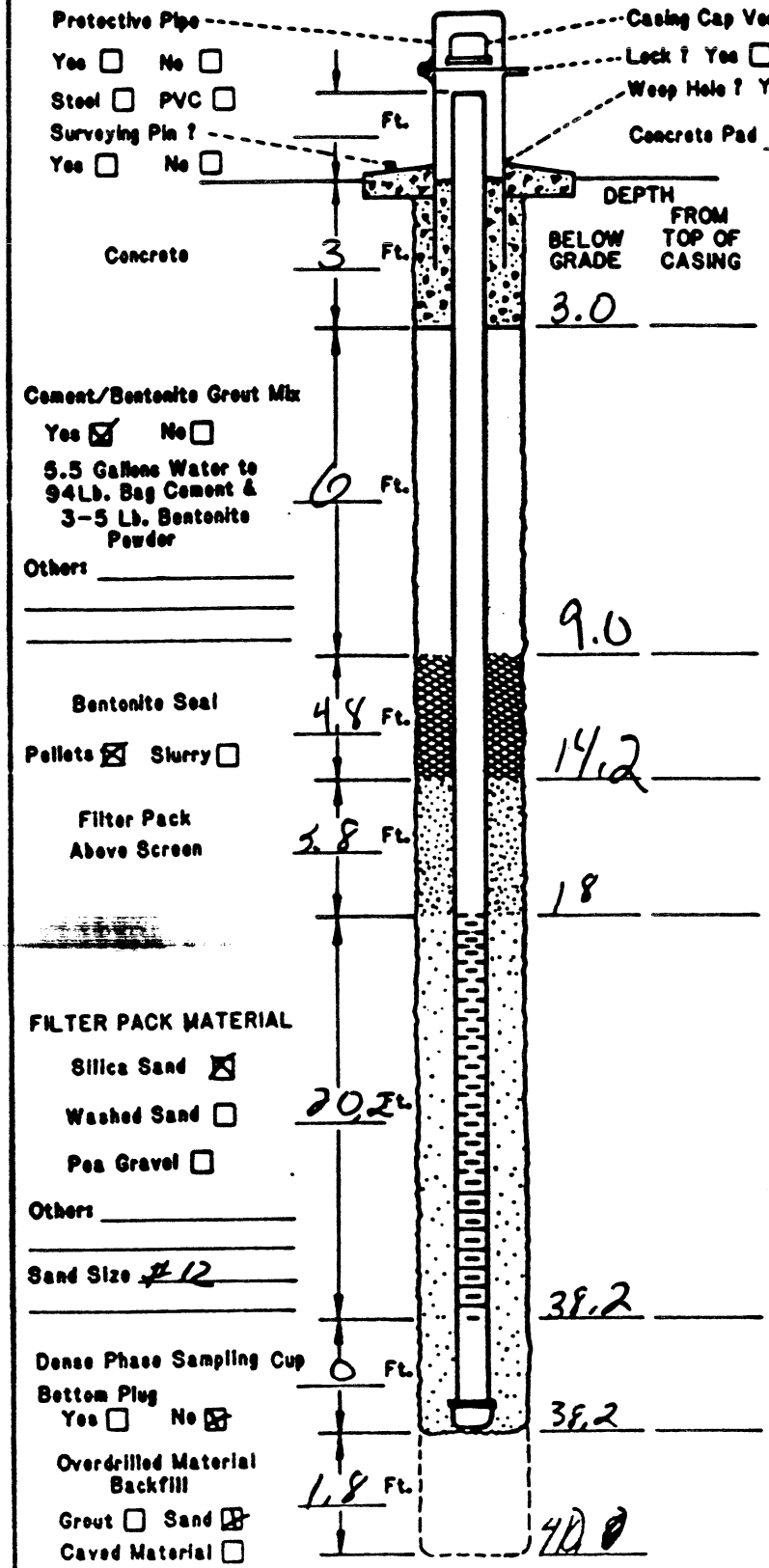

DRILLING INFORMATION:

1. Borehole Diameter= 5 inches.
2. Were Drilling Additives Used ? Yes ☐ No ☒
   Revert ☐ Bentonite ☐ Water ☐
   Solid Auger ☐ Hollow Stem Auger ☐
3. Was Outer Steel Casing Used ? Yes ☐ No ☒
   Depth= _____ to _____ Feet.
4. Borehole Diameter for Outer Casing ____ inches.

WELL CONSTRUCTION INFORMATION:

1. Type of Casing: PVC ☒ Galvanized ☐ Teflon ☐
   Stainless ☐ Other _____
2. Type of Casing Joints: Screw-Couple ☒ Glue-Couple ☐ Other _____
3. Type of Well Screen: PVC ☒ Galvanized ☐
   Stainless ☐ Teflon ☐ Other _____
4. Diameter of Casing and Well Screen:
   Casing 2" inches, Screen 2 inches.
5. Slot Size of Screen: .010
6. Type of Screen Perforations: Factory Slotted ☒
   Hacksaw ☐ Drilled ☐ Other _____
7. Installed Protector Pipe w/Lock: Yes ☐ No ☐

WELL DEVELOPMENT INFORMATION:

1. How was Well Developed ? Bailing ☐ Pumping ☐
   Air Surging (Air or Nitrogen) ☐ Other _____
2. Time Spent on Well Development ?
   _____ / _____ Minutes/Hours
3. Approximate Water Volume Removed ? _____ Gallons
4. Water Clarity Before Development ? Clear ☐
   Turbid ☐ Opaque ☐
5. Water Clarity After Development ? Clear ☐
   Turbid ☐ Opaque ☐
6. Did Water have Oder ? Yes ☐ No ☐
   If Yes, Describe _____
7. Did Water have any Color ? Yes ☐ No ☐
   If Yes, Describe _____

WATER LEVEL INFORMATION:

Water Level Summary (From Top of Casing)

During Drilling _____ Ft. Date _____
Before Development _____ Ft. Date _____
After Development _____ Ft. Date _____

Driller/Firm MOONEY DRILLING Drill Rig Type _____ Date Installed 1-4-89
Drill Crew PETE MOONEY Well No. M-89 Kerr-McGee Hydrologist JEFF LUX

SOIL BORING LOG KM-8088-A

KERR-McGEE CORPORATION Hydrology Dept. Engineering Services	KM SUBSIDIARY: CHEMICAL	LOCATION: HENDERSON, NEV	BORING NUMBER: M-89

DEPTH IN FEET	LITHOLOGIC DESCRIPTION	GRAPHIC LOG	UNIFIED SOIL FIELD CLASS.	BLOWS PER FOOT	PID (ppm)	SOIL SAMPLE NO.	SOIL SAMPLE TYPE	SOIL SAMPLE DEPTH	SOIL SAMPLE REC.	REMARKS OR FIELD OBSERVATIONS
0	FILL - BROWN SANDY GRAVEL/ GRAVELLY SAND W/ SILT, WELL-GRADED, DRY		GW-GM		NO PID USED	1				
5	BROWN GRAVELLY SAND, FINE TO MEDIUM, W/ SILT, WELL-GRADED		SW							
10										
10.5	6" THICK CALICHE LENS									RIG CHATTER
	LIGHTER BROWN, FINER									
15										
19	6" THICK CALICHE LENS									RIG CHATTER
20	LIGHT BROWN SILTY FINE SAND BELOW CALICHE		SW-SM							
25										
30										
32	4" THICK CALICHE LENS									RIG CHATTER
	LIGHT BROWN SILTY FINE SAND W/ GRAVEL, WELL-GRADED		SG-SW							
35										
36	MUDDY CREEK - YELLOWISH BROWN SILTY CLAY W/ SOME FINE SAND, MOIST, FIRM, LOW TO NO PLASTICITY		CL-ML	5/7		1		40 41	1.0	BIT PLUGGED 3-4 TIMES BELOW 36' DEPTH.
40										

EXPLANATION

- Water Table (24 Hour)
- Water Table (Time of Boring)
- PID — Photoionization Detection (ppm)
- NO. — Identifies Sample by Number
- TYPE — Sample Collection Method
- SPLIT-BARREL
- AUGER
- ROCK CORE
- THIN-WALLED TUBE
- CONTINUOUS SAMPLER
- NO RECOVERY
- DEPTH — Depth Top and Bottom of Sample
- REC. — Actual Length of Recovered Sample in Feet

GRAPHIC LOG LEGEND

- CLAY
- SILT
- SAND
- GRAVEL
- SILTY CLAY
- CLAYEY SILT
- DEBRIS FILL
- HIGHLY ORGANIC (PEAT)
- SANDY CLAY
- CLAYEY SAND

DATE DRILLED	PAGE
1-4-89	1 of 1

DRILLING METHOD: AIR ROTARY

DRILLED BY: MOONEY DRILLING

LOGGED BY: JEFF LUX

EXISTING GRADE ELEVATION (FT AMSL):

LOCATION OR GRID COORDINATES:

P-1A

SOIL BORING LOG KM—5655-A

KERR-McGEE CORPORATION Hydrology Dept. Engineering Services	KM SUBSIDIARY CHEMICAL	LOCATION HENDERSON, NV	BORING NUMBER M-90

DEPTH IN FEET	LITHOLOGIC DESCRIPTION	GRAPHIC LOG	UNIFIED SOIL FIELD CLASS.	BLOWS PER FOOT	PID (ppm)	SOIL SAMPLE NO.	SOIL SAMPLE TYPE	SOIL SAMPLE DEPTH	SOIL SAMPLE REC.	REMARKS OR FIELD OBSERVATIONS
0–5	SILTY SAND (M) TO DARK BROWN, FINE TO COARSE-GRAINED, WELL-GRADED, DRY - BECOMING SLI MOIST @ 5'		SM							MUSTY ODOR NOTED FROM 5' TO TD
5–10	SILTY SAND AS ABOVE; GRAVEL COMMON @ 8-13'									
10–15	SILTY SAND AS ABOVE; BECOMING MOIST @ 16'; GRAVEL ZONE @ 16.5-17.5'									
15–20										
20	▽									
24–25	SILTY CLAY; LT. TAN - LT. BROWN; SATURATED, MOD. PLASTIC		CL							
25–30										
30	TD 31'									

EXPLANATION

- ▼ Water Table (24 Hour)
- ▽ Water Table (Time of Boring)
- PID Photoionization Detection (ppm)
- NO. Identifies Sample by Number
- TYPE Sample Collection Method

SPLIT-BARREL; AUGER; ROCK CORE; THIN-WALLED TUBE; CONTINUOUS SAMPLER; NO RECOVERY

DEPTH Depth Top and Bottom of Sample
REC. Actual Length of Recovered Sample in Feet

GRAPHIC LOG LEGEND

CLAY; SILT; SAND; GRAVEL; SILTY CLAY; CLAYEY SILT; DEBRIS FILL; HIGHLY ORGANIC (PEAT); SANDY CLAY; CLAYEY SAND

DATE DRILLED	PAGE
5/4/93	1 of 1

DRILLING METHOD: HOLLOW STEM AUGER
DRILLED BY: WESTERN TECHNOLOGIES
LOGGED BY: T. REED
EXISTING GRADE ELEVATION (FT. AMSL): ~ 1745
LOCATION OR GRID COORDINATES:

KERR-McGEE CORPORATION
HYDROLOGY DEPARTMENT
MONITORING WELL INSTALLATION DIAGRAM

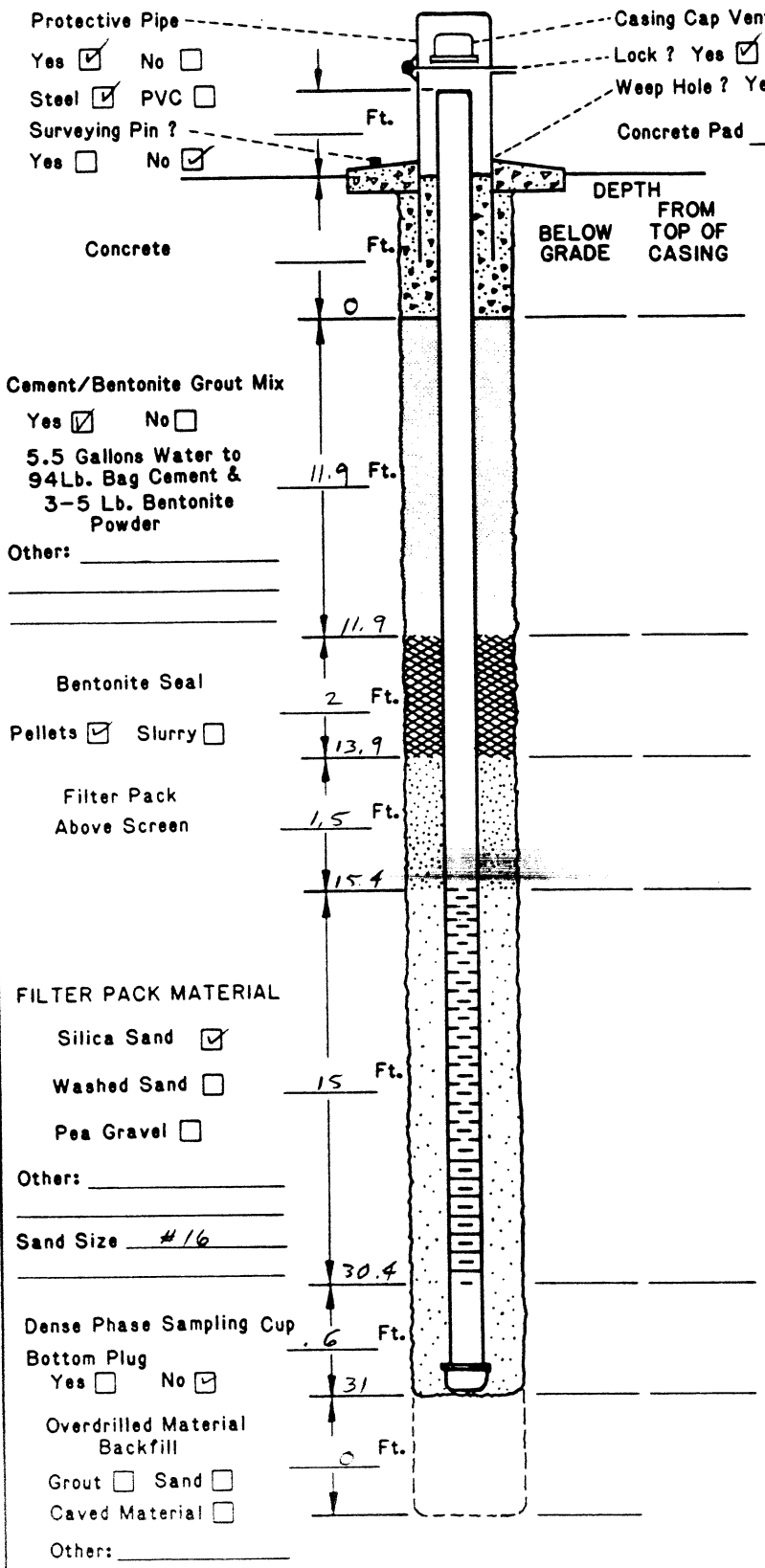

DRILLING INFORMATION:

1. Borehole Diameter= 8.5 Inches.
2. Were Drilling Additives Used ? Yes ☐ No ☑
   Revert ☐ Bentonite ☐ Water ☐
   Solid Auger ☐ Hollow Stem Auger ☑
3. Was Outer Steel Casing Used ? Yes ☐ No ☑
   Depth= _____ to _____ Feet.
4. Borehole Diameter for Outer Casing _____ Inches.

WELL CONSTRUCTION INFORMATION:

1. Type of Casing: PVC ☑ Galvanized ☐ Teflon ☐
   Stainless ☐ Other _____
2. Type of Casing Joints: Screw-Couple ☑ Glue-Couple ☐ Other _____
3. Type of Well Screen: PVC ☑ Galvanized ☐
   Stainless ☐ Teflon ☐ Other _____
4. Diameter of Casing and Well Screen:
   Casing 2 Inches, Screen 2 Inches.
5. Slot Size of Screen: .010
6. Type of Screen Perforation: Factory Slotted ☑
   Hacksaw ☐ Drilled ☐ Other _____
7. Installed Protector Pipe w/Lock: Yes ☑ No ☐

WELL DEVELOPMENT INFORMATION:

1. How was Well Developed ? Bailing ☐ Pumping ☐
   Air Surging (Air or Nitrogen) ☐ Other _____
2. Time Spent on Well Development ?
   _____ / _____ Minutes/Hours
3. Approximate Water Volume Removed ? _____ Gallons
4. Water Clarity Before Development ? Clear ☐
   Turbid ☐ Opaque ☐
5. Water Clarity After Development ? Clear ☐
   Turbid ☐ Opaque ☐
6. Did Water have Odor ? Yes ☐ No ☐
   If Yes, Describe _____
7. Did Water have any Color ? Yes ☐ No ☐
   If Yes , Describe _____

WATER LEVEL INFORMATION:

Water Level Summary (From Top of Casing)

During Drilling _____ Ft. Date _____
Before Development _____ Ft. Date _____
After Development _____ Ft. Date _____

Driller/Firm [illegible] Drill Rig Type [illegible] Date Installed 5/[illegible]

Drill Crew [illegible] Well No. MW-90 Kerr-McGee Hydrologist [illegible]

P-A

SOIL BORING LOG KM—5655-A

KERR-McGEE CORPORATION Hydrology Dept. Engineering Services	KM SUBSIDIARY CHEMICAL	LOCATION HENDERSON, NV	BORING NUMBER M-91

DEPTH IN FEET	LITHOLOGIC DESCRIPTION	GRAPHIC LOG	UNIFIED SOIL FIELD CLASS.	BLOWS PER FOOT	PID (ppm)	SOIL SAMPLE NO.	SOIL SAMPLE TYPE	SOIL SAMPLE DEPTH	SOIL SAMPLE REC.	REMARKS OR FIELD OBSERVATIONS
0–2	SILTY SAND; MED-DARK BROWN, DRY; WELL-GRADED, OCC. TO COMMON GRAVEL		SM							
2–5	SILTY SAND AS ABOVE, LT. TO MED. BROWN		SM							
5–10	GRAVELLY ZONE @ 8-10'									
10–15	SILTY SAND AS ABOVE, CALICHE ZONE @ 14-16'									
15–20	GRAVELLY ZONE @ 18-20'									
20–25	SILTY CLAY TO CLAYEY SILT, LT. TO MED. BROWN, SATURATED, MOD. PLASTIC, OCC. SAND GRAINS		CL-ML							
25–30	TO 30'									
30										

EXPLANATION

- ▼ Water Table (24 Hour)
- ▽ Water Table (Time of Boring)
- PID Photoionization Detection (ppm)
- NO. Identifies Sample by Number
- TYPE Sample Collection Method

SPLIT-BARREL; AUGER; ROCK CORE; THIN WALLED TUBE; CONTINUOUS SAMPLER; NO RECOVERY

DEPTH Depth Top and Bottom of Sample
REC Actual Length of Recovered Sample in Feet

GRAPHIC LOG LEGEND

CLAY; SILT; SAND; GRAVEL; SILTY CLAY; CLAYEY SILT; DEBRIS FILL; HIGHLY ORGANIC (PEAT); SANDY CLAY; CLAYEY SAND; CALICHE; _____

DATE DRILLED	PAGE
5/4/93	1 of 1

DRILLING METHOD: HOLLOW STEM AUGER

DRILLED BY: WESTERN TECHNOLOGIES

LOGGED BY: T. REED

EXISTING GRADE ELEVATION (FT. AMSL): ~ 1741

LOCATION OR GRID COORDINATES:

KERR-McGEE CORPORATION
HYDROLOGY DEPARTMENT
MONITORING WELL INSTALLATION DIAGRAM

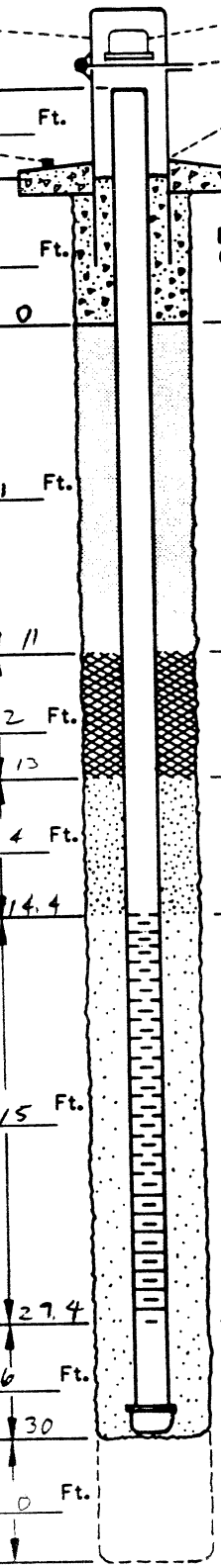

Protective Pipe
Yes ☑ No ☐
Steel ☑ PVC ☐
Surveying Pin ?
Yes ☐ No ☑

Casing Cap Vent ? Yes ☑ No ☐
Lock ? Yes ☑ No ☐
Weep Hole ? Yes ☐ No ☑
Concrete Pad 3 Ft. x 3 Ft. x 2 Inches

	Ft.	DEPTH BELOW GRADE	DEPTH FROM TOP OF CASING
Concrete			
	0		
Cement/Bentonite Grout Mix Yes ☑ No ☐ 5.5 Gallons Water to 94Lb. Bag Cement & 3-5 Lb. Bentonite Powder Other:	11		
	11		
Bentonite Seal Pellets ☑ Slurry ☐	2		
	13		
Filter Pack Above Screen	1.4		
	14.4		
FILTER PACK MATERIAL Silica Sand ☑ Washed Sand ☐ Pea Gravel ☐ Other: Sand Size #16	15		
	27.4		
Dense Phase Sampling Cup Bottom Plug Yes ☐ No ☑	.6		
	30		
Overdrilled Material Backfill Grout ☐ Sand ☐ Caved Material ☐ Other:	0		

DRILLING INFORMATION:

1. Borehole Diameter= 8.5 Inches.
2. Were Drilling Additives Used ? Yes ☐ No ☑
   Revert ☐ Bentonite ☐ Water ☐
   Solid Auger ☐ Hollow Stem Auger ☑
3. Was Outer Steel Casing Used ? Yes ☐ No ☑
   Depth= _____ to _____ Feet.
4. Borehole Diameter for Outer Casing _____ Inches.

WELL CONSTRUCTION INFORMATION:

1. Type of Casing: PVC ☑ Galvanized ☐ Teflon ☐
   Stainless ☐ Other _____
2. Type of Casing Joints: Screw-Couple ☑ Glue-Couple ☐ Other _____
3. Type of Well Screen: PVC ☑ Galvanized ☐
   Stainless ☐ Teflon ☐ Other _____
4. Diameter of Casing and Well Screen:
   Casing 2 Inches, Screen 2 Inches.
5. Slot Size of Screen: .010
6. Type of Screen Perforation: Factory Slotted ☑
   Hacksaw ☐ Drilled ☐ Other _____
7. Installed Protector Pipe w/Lock: Yes ☑ No ☐

WELL DEVELOPMENT INFORMATION:

1. How was Well Developed ? Bailing ☐ Pumping ☐
   Air Surging (Air or Nitrogen) ☐ Other _____
2. Time Spent on Well Development ?
   _____/_____ Minutes/Hours
3. Approximate Water Volume Removed ? _____ Gallons
4. Water Clarity Before Development ? Clear ☐
   Turbid ☐ Opaque ☐
5. Water Clarity After Development ? Clear ☐
   Turbid ☐ Opaque ☐
6. Did Water have Odor ? Yes ☐ No ☐
   If Yes, Describe _____
7. Did Water have any Color ? Yes ☐ No ☐
   If Yes, Describe _____

WATER LEVEL INFORMATION:

Water Level Summary (From Top of Casing)

During Drilling _____ Ft. Date _____
Before Development _____ Ft. Date _____
After Development _____ Ft. Date _____

Driller/Firm T. High / Western [illegible]
Drill Rig Type [illegible]
Date Installed 5/6/[illegible]
Drill Crew T. High / T. [illegible]
Well No. [illegible]
Kerr-McGee Hydrologist [illegible]

SOIL BORING LOG KM—5655-A

KERR-McGEE CORPORATION Hydrology Dept. Engineering Services	KM SUBSIDIARY CHEMICAL	LOCATION HENDERSON, NV.	BORING NUMBER M-92

DEPTH IN FEET	LITHOLOGIC DESCRIPTION	GRAPHIC LOG	UNIFIED SOIL FIELD CLASS.	BLOWS PER FOOT	PID (ppm)	SOIL SAMPLE NO	SOIL SAMPLE TYPE	SOIL SAMPLE DEPTH	SOIL SAMPLE REC.	REMARKS OR FIELD OBSERVATIONS
0	SILTY SAND, LT-MEDIUM BROWN, W-L GRADED, DRY TO SLIGHTLY MOIST		SM							
5	CALICHE-CEMENTED GRAVEL ZONE @ 4-6'									
10	SILTY SAND; FINE - COARSED GRAINED, CALICHE CEMENTED GRAVELLY ZONE @ 9-14'									EARTHY OR MUSTY ODOR NOTED DURING DRILLING
15	SILTY SAND AS ABOVE, BECOMING MODERATELY MOIST @ 18'		SM							
20	SILTY CLAY, LT. BROWN, SLI. TO MODERATELY MOIST, STIFF, OCC. FINE TO MED SAND GRAINS		CL							
25										
30										
35	SILTY CLAY AS ABOVE; SATURATED, MOD. PLASTIC									
40										

EXPLANATION

- ▼ Water Table (24 Hour)
- ▽ Water Table (Time of Boring)
- PID Photoionization Detection (ppm)
- NO. Identifies Sample by Number
- TYPE Sample Collection Method
  - SPLIT-BARREL
  - AUGER
  - ROCK CORE
  - THIN WALLED TUBE
  - CONTINUOUS SAMPLER
  - NO RECOVERY
- DEPTH Depth Top and Bottom of Sample
- REC. Actual Length of Recovered Sample in Feet

GRAPHIC LOG LEGEND

- CLAY
- SILT
- SAND
- GRAVEL
- SILTY CLAY
- CLAYEY SILT
- DEBRIS FILL
- HIGHLY ORGANIC PEAT
- SANDY CLAY
- CLAYEY SAND
- CALICHE

DATE DRILLED	PAGE
5/4-5/93	1 of 2
DRILLING METHOD: HOLLOW STEM AUGER	
DRILLED BY: WESTERN TECH.	
LOGGED BY: — REED	
EXISTING GRADE ELEVATION FT AMSL: ~1800'	
LOCATION OR GRID COORDINATES:	

SOIL BORING LOG KM—5655-A

KERR-McGEE CORPORATION Hydrology Dept. Engineering Services	KM SUBSIDIARY CHEMICAL	LOCATION HENDERSON, NV	BORING NUMBER M-92 (CONT)

DEPTH IN FEET	LITHOLOGIC DESCRIPTION	GRAPHIC LOG	UNIFIED SOIL FIELD CLASS.	BLOWS PER FOOT	PID (ppm)	SOIL SAMPLE NO	SOIL SAMPLE TYPE	SOIL SAMPLE DEPTH	SOIL SAMPLE REC.	REMARKS OR FIELD OBSERVATIONS
45			CL							
	TD 45.5'									

EXPLANATION

- ▼ Water Table (24 Hour)
- ▽ Water Table (Time of Boring)
- PID Photoionization Detection (ppm)
- NO. Identifies Sample by Number
- TYPE Sample Collection Method

SPLIT-BARREL · AUGER · ROCK CORE · THIN WALLED TUBE · CONTINUOUS SAMPLER · NO RECOVERY

DEPTH Depth Top and Bottom of Sample
REC. Actual Length of Recovered Sample in Feet

GRAPHIC LOG LEGEND

CLAY · SILT · SAND · GRAVEL · SILTY CLAY · CLAYEY SILT · DEBRIS FILL · HIGHLY ORGANIC (PEAT) · SANDY CLAY · CLAYEY SAND

DATE DRILLED	PAGE
5/4-5/93	1 of 2
DRILLING METHOD: HOLLOW STEM AUGER	
DRILLED BY: WESTERN TECH.	
LOGGED BY: T. REED	
EXISTING GRADE ELEVATION (FT. AMSL): ~1800'	
LOCATION OR GRID COORDINATES:	

KERR-McGEE CORPORATION
HYDROLOGY DEPARTMENT
MONITORING WELL INSTALLATION DIAGRAM

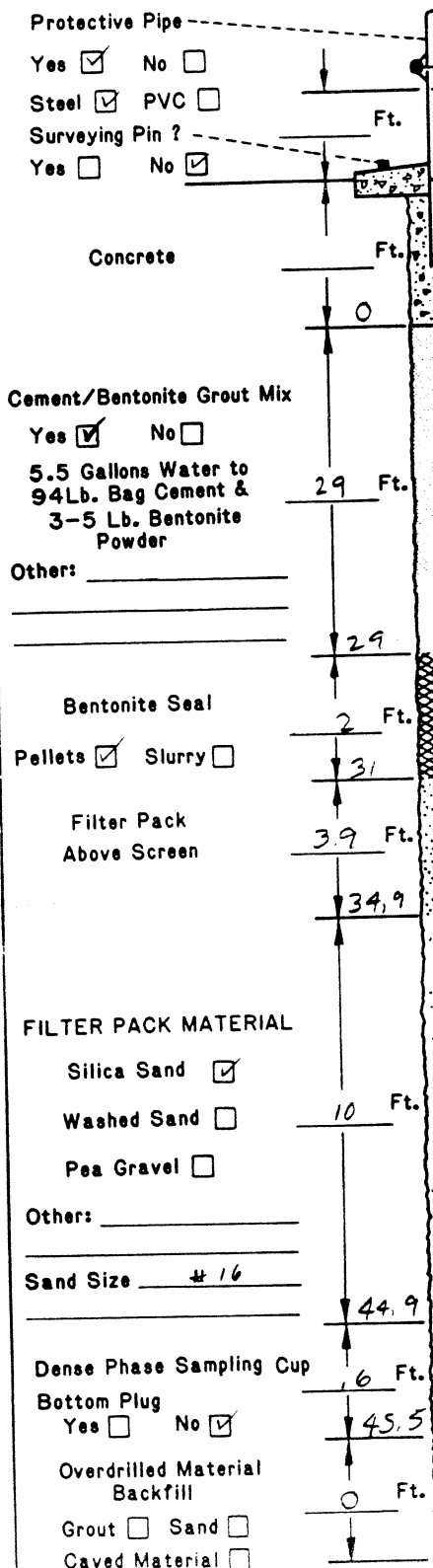

DRILLING INFORMATION:

1. Borehole Diameter= 8.5 Inches.
2. Were Drilling Additives Used ? Yes ☐ No ☑
   Revert ☐ Bentonite ☐ Water ☐
   Solid Auger ☐ Hollow Stem Auger ☑
3. Was Outer Steel Casing Used ? Yes ☐ No ☑
   Depth= _____ to _____ Feet.
4. Borehole Diameter for Outer Casing _____ Inches.

WELL CONSTRUCTION INFORMATION:

1. Type of Casing: PVC ☑ Galvanized ☐ Teflon ☐
   Stainless ☐ Other _____
2. Type of Casing Joints: Screw-Couple ☑ Glue-Couple ☐ Other _____
3. Type of Well Screen: PVC ☑ Galvanized ☐
   Stainless ☐ Teflon ☐ Other _____
4. Diameter of Casing and Well Screen:
   Casing 2 Inches, Screen 2 Inches.
5. Slot Size of Screen: .010
6. Type of Screen Perforation: Factory Slotted ☑
   Hacksaw ☐ Drilled ☐ Other _____
7. Installed Protector Pipe w/Lock: Yes ☑ No ☐

WELL DEVELOPMENT INFORMATION:

1. How was Well Developed ? Bailing ☑ Pumping ☐
   Air Surging (Air or Nitrogen) ☐ Other _____
2. Time Spent on Well Development ?
   30 / 1 Minutes/Hours
3. Approximate Water Volume Removed ? 50 Gallons
4. Water Clarity Before Development ? Clear ☐
   Turbid ☐ Opaque ☑
5. Water Clarity After Development ? Clear ☐
   Turbid ☑ Opaque ☐
6. Did Water have Odor ? Yes ☐ No ☑
   If Yes, Describe _____
7. Did Water have any Color ? Yes ☑ No ☐
   If Yes, Describe LT. BROWN

WATER LEVEL INFORMATION:

Water Level Summary (From Top of Casing)

During Drilling _____ Ft. Date _____
Before Development _____ Ft. Date _____
After Development _____ Ft. Date _____

Driller/Firm [illegible] Drill Rig Type MOBILE B 50 Date Installed 5/5/93
Drill Crew [illegible] Well No. M-92 Kerr-McGee Hydrologist [illegible]

SOIL BORING LOG KM—5655-A

KERR-McGEE CORPORATION Hydrology Dept. Engineering Services	KM SUBSIDIARY CHEMICAL	LOCATION HENDERSON, NV.	BORING NUMBER M-93

DEPTH IN FEET	LITHOLOGIC DESCRIPTION	GRAPHIC LOG	UNIFIED SOIL FIELD CLASS.	BLOWS PER FOOT	PID (ppm)	SOIL SAMPLE NO.	SOIL SAMPLE TYPE	SOIL SAMPLE DEPTH	SOIL SAMPLE REC.	REMARKS OR FIELD OBSERVATIONS
1	GRAVEL FILL									
	SILTY SAND, LT TO MED. BROWN, DRY, AND GRAVEL 1-6'		SM		0					
5	SILTY SAND AS ABOVE, GRAVEL AND COBBLES COMMON FROM 6-10'				0					NO HYDROCARBON ODOR
					0					
10	SILTY SAND AS ABOVE, BECOMING SLI. MOIST; CALICHE-CEMENTED GRAVELLY ZONE FROM 14-15'				0					
					0					
15			SM		0					
					0					
20					0					
					0					
23.5					0					
25	SILTY CLAY, LT. BROWN, SLI. MOIST, STIFF, SAND GRAINS COMMON				0					
			CL		0					
30					0					
	SILTY CLAY SATURATED @ 33'		▽		0					NO HYDROCARBON ODOR
33					0					
35					0					
					0					
40					0					

EXPLANATION

- ▼ Water Table (24 Hour)
- ▽ Water Table (Time of Boring)
- PID Photoionization Detection (ppm)
- NO. Identifies Sample by Number
- TYPE Sample Collection Method

SPLIT-BARREL · AUGER · ROCK CORE · THIN-WALLED TUBE · CONTINUOUS SAMPLER · NO RECOVERY

DEPTH Depth Top and Bottom of Sample
REC. Actual Length of Recovered Sample in Feet

GRAPHIC LOG LEGEND

CLAY · SILT · SAND · GRAVEL · SILTY CLAY · CLAYEY SILT · DEBRIS FILL · HIGHLY ORGANIC (PEAT) · SANDY CLAY · CLAYEY SAND · CALICHE

DATE DRILLED	PAGE
5/5/93	1 of 2
DRILLING METHOD: HOLLOW STEM AUGER	
DRILLED BY: WESTERN TECH.	
LOGGED BY: T. REED	
EXISTING GRADE ELEVATION FT. AMSL: ~1798'	
LOCATION OR GRID COORDINATES:	

SOIL BORING LOG KM—5655-A

KERR-McGEE CORPORATION Hydrology Dept. Engineering Services	KM SUBSIDIARY CHEMICAL	LOCATION HENDERSON, NV.	BORING NUMBER M-93 (CONT.)

DEPTH IN FEET	LITHOLOGIC DESCRIPTION	GRAPHIC LOG	UNIFIED SOIL FIELD CLASS.	BLOWS PER FOOT	PID (ppm)	SOIL SAMPLE NO.	SOIL SAMPLE TYPE	SOIL SAMPLE DEPTH	SOIL SAMPLE REC.	REMARKS OR FIELD OBSERVATIONS
45			CL		0 0 0					
	TD 46'									

EXPLANATION

- ▼ Water Table (24 Hour)
- ▽ Water Table (Time of Boring)
- PID Photoionization Detection (ppm)
- NO. Identifies Sample by Number
- TYPE Sample Collection Method

SPLIT-BARREL; AUGER; ROCK CORE; THIN-WALLED TUBE; CONTINUOUS SAMPLER; NO RECOVERY

DEPTH Depth Top and Bottom of Sample
REC. Actual Length of Recovered Sample in Feet

GRAPHIC LOG LEGEND

CLAY; DEBRIS FILL; SILT; HIGHLY ORGANIC PEAT; SAND; SANDY CLAY; GRAVEL; CLAYEY SAND; SILTY CLAY; CLAYEY SILT

DATE DRILLED	PAGE
5/5/93	1 of 2

DRILLING METHOD: HOLLOW STEM AUGER
DRILLED BY: WESTERN TECH.
LOGGED BY: T. REID
EXISTING GRADE ELEVATION (FT. AMSL): ~1798'
LOCATION OR GRID COORDINATES:

KERR-McGEE CORPORATION
HYDROLOGY DEPARTMENT
MONITORING WELL INSTALLATION DIAGRAM

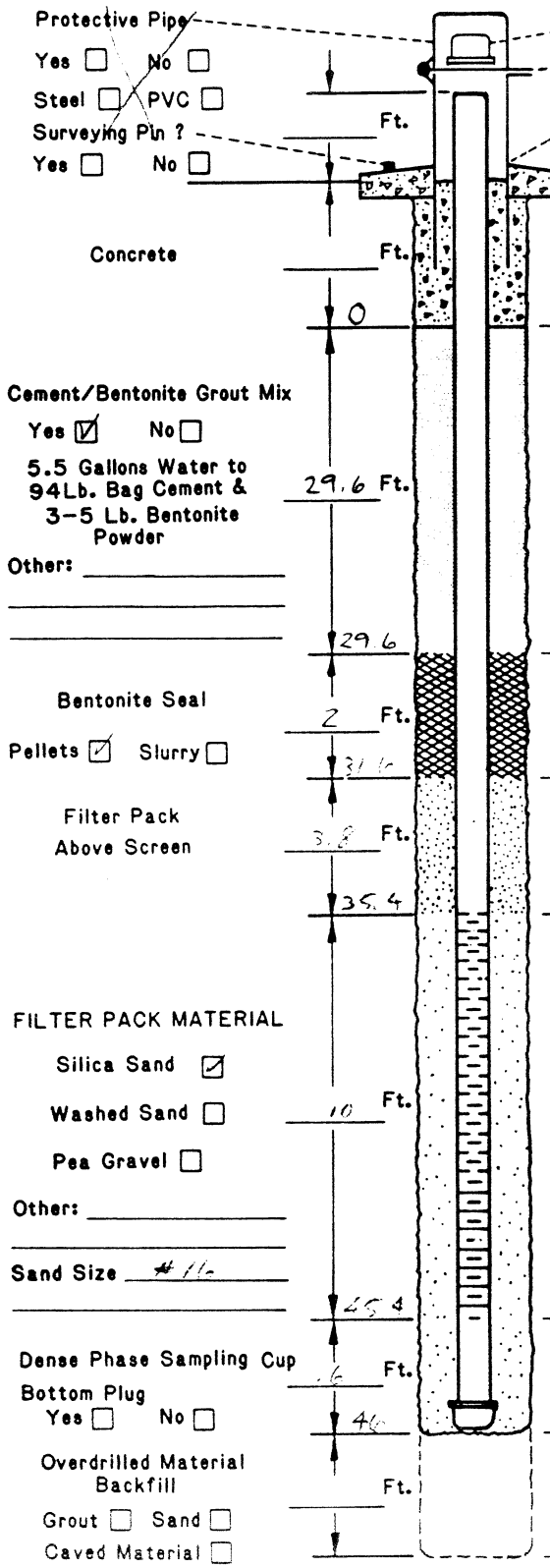

Casing Cap Vent ? Yes ☐ No ☐

Lock ? Yes ☑ No ☐

Weep Hole ? Yes ☐ No ☐

FLUSH MOUNT WELL

Concrete Pad _____ Ft. x _____ Ft. x _____ Inches

DEPTH

	BELOW GRADE	FROM TOP OF CASING

DRILLING INFORMATION:

1. Borehole Diameter= 8.5 Inches.
2. Were Drilling Additives Used ? Yes ☐ No ☑
   Revert ☐ Bentonite ☐ Water ☐
   Solid Auger ☐ Hollow Stem Auger ☑
3. Was Outer Steel Casing Used ? Yes ☐ No ☑
   Depth= _____ to _____ Feet.
4. Borehole Diameter for Outer Casing _____ Inches.

WELL CONSTRUCTION INFORMATION:

1. Type of Casing: PVC ☑ Galvanized ☐ Teflon ☐
   Stainless ☐ Other _____
2. Type of Casing Joints: Screw-Couple ☑ Glue-Couple ☐ Other _____
3. Type of Well Screen: PVC ☑ Galvanized ☐
   Stainless ☐ Teflon ☐ Other _____
4. Diameter of Casing and Well Screen:
   Casing 2 Inches, Screen 2 Inches.
5. Slot Size of Screen: .010
6. Type of Screen Perforation: Factory Slotted ☑
   Hacksaw ☐ Drilled ☐ Other _____
7. Installed Protector Pipe w/Lock: Yes ☐ No ☑

WELL DEVELOPMENT INFORMATION:

1. How was Well Developed ? Bailing ☑ Pumping ☐
   Air Surging (Air or Nitrogen) ☐ Other _____
2. Time Spent on Well Development ?
   20 / 1 Minutes/Hours
3. Approximate Water Volume Removed ? 50 Gallons
4. Water Clarity Before Development ? Clear ☐
   Turbid ☐ Opaque ☑
5. Water Clarity After Development ? Clear ☐
   Turbid ☑ Opaque ☐
6. Did Water have Odor ? Yes ☐ No ☑
   If Yes, Describe _____
7. Did Water have any Color ? Yes ☑ No ☐
   If Yes , Describe LT BROWN

WATER LEVEL INFORMATION:

Water Level Summary (From Top of Casing)

During Drilling _____ Ft. Date _____

Before Development _____ Ft. Date _____

After Development _____ Ft. Date _____

Driller/Firm [illegible] Drill Rig Type [illegible] Date Installed 5/5/93

Drill Crew [illegible] Well No. M-93 Kerr-McGee Hydrologist T. REED

SOIL BORING LOG KM—5655-A

KERR-McGEE CORPORATION Hydrology Dept. Engineering Services	KM SUBSIDIARY Chemical	LOCATION Henderson, NE	BORING NUMBER M-94

DEPTH IN FEET	LITHOLOGIC DESCRIPTION	GRAPHIC LOG	UNIFIED SOIL FIELD CLASS.	BLOWS PER FOOT	PID (ppm)	SOIL SAMPLE NO.	SOIL SAMPLE TYPE	SOIL SAMPLE DEPTH	SOIL SAMPLE REC.	REMARKS OR FIELD OBSERVATIONS
0	0–2 fine and medium silty SAND + some gravel, brown, dry to damp; more gravelly brown, fine and medium silty SAND, trace of clay, damp gravel - cobbles ?									soil cuttings described
10										hard drilling
15 ▽	fine to medium silty SAND - saturated at appx. 16'									
20	light brown clayey SILT to silty CLAY, stiff almost auger refusal T.D. = 22.5'									
25										
30										
35										

EXPLANATION

- ▼ Water Table (24 Hour)
- ▽ Water Table (Time of Boring)
- PID Photoionization Detection (ppm)
- NO. Identifies Sample by Number
- TYPE Sample Collection Method

SPLIT-BARREL · AUGER · ROCK CORE · THIN-WALLED TUBE · CONTINUOUS SAMPLER · NO RECOVERY

DEPTH Depth Top and Bottom of Sample
REC. Actual Length of Recovered Sample in Feet

GRAPHIC LOG LEGEND

CLAY · SILT · SAND · GRAVEL · SILTY CLAY · CLAYEY SILT · DEBRIS FILL · HIGHLY ORGANIC (PEAT) · SANDY CLAY · CLAYEY SAND

DATE DRILLED	PAGE
10-11-93	1 of 1

DRILLING METHOD: HSA w/ plugged bottom

DRILLED BY: Clusken Technologies

LOGGED BY: J.F.

EXISTING GRADE ELEVATION (FT. AMSL)

LOCATION OR GRID COORDINATES

KERR-McGEE CORPORATION
HYDROLOGY DEPARTMENT
MONITORING WELL INSTALLATION DIAGRAM

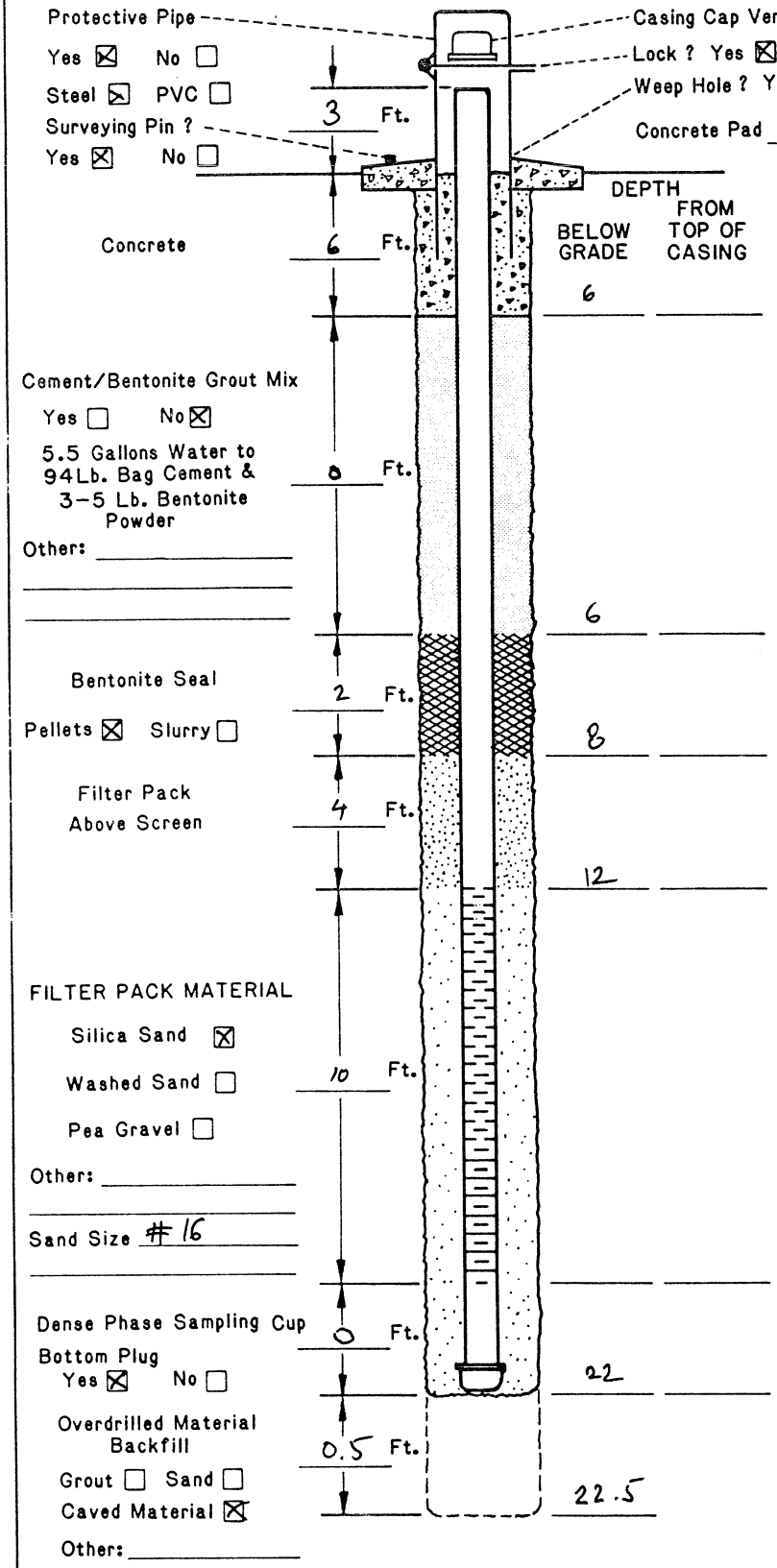

DRILLING INFORMATION:

1. Borehole Diameter= 8 1/2 Inches.
2. Were Drilling Additives Used ? Yes ☒ No ☐
   Revert ☐ Bentonite ☐ Water ☒
   Solid Auger ☐ Hollow Stem Auger ☐
3. Was Outer Steel Casing Used ? Yes ☐ No ☒
   Depth= _____ to _____ Feet.
4. Borehole Diameter for Outer Casing _____ Inches.

WELL CONSTRUCTION INFORMATION:

1. Type of Casing: PVC ☒ Galvanized ☐ Teflon ☐
   Stainless ☐ Other _____
2. Type of Casing Joints: Screw-Couple ☒ Glue-Couple ☐ Other _____
3. Type of Well Screen: PVC ☒ Galvanized ☐
   Stainless ☐ Teflon ☐ Other _____
4. Diameter of Casing and Well Screen:
   Casing 2 Inches, Screen 2 Inches.
5. Slot Size of Screen: 0.010
6. Type of Screen Perforation: Factory Slotted ☒
   Hacksaw ☐ Drilled ☐ Other _____
7. Installed Protector Pipe w/Lock: Yes ☒ No ☐

WELL DEVELOPMENT INFORMATION:

1. How was Well Developed ? Bailing ☐ Pumping ☒
   Air Surging (Air or Nitrogen) ☐ Other _____
2. Time Spent on Well Development ?
   _____/_____ Minutes/Hours
3. Approximate Water Volume Removed ? _____ Gallons
4. Water Clarity Before Development ? Clear ☐
   Turbid ☐ Opaque ☐
5. Water Clarity After Development ? Clear ☐
   Turbid ☐ Opaque ☐
6. Did Water have Odor ? Yes ☐ No ☐
   If Yes, Describe _____
7. Did Water have any Color ? Yes ☐ No ☐
   If Yes , Describe _____

WATER LEVEL INFORMATION:

Water Level Summary (From Top of Casing)

During Drilling ? 16' Ft. Date 10-11-93

Before Development _____ Ft. Date _____

After Development _____ Ft. Date _____

Driller/Firm Greg / Western Techn. Drill Rig Type _____ Date Installed 10-11-93

Drill Crew James + Rick Well No. M-94 Kerr-McGee Hydrologist Jan FAJGL

SOIL BORING LOG KM—5655-A

KERR-McGEE CORPORATION Hydrology Dept. Engineering Services	KM SUBSIDIARY Chemical	LOCATION Henderson, NE	BORING NUMBER M-95

DEPTH IN FEET	LITHOLOGIC DESCRIPTION	GRAPHIC LOG	UNIFIED SOIL FIELD CLASS.	BLOWS PER FOOT	PID (ppm)	SOIL SAMPLE NO.	SOIL SAMPLE TYPE	SOIL SAMPLE DEPTH	SOIL SAMPLE REC.	REMARKS OR FIELD OBSERVATIONS
0	brown, fine to medium gravelly SAND, damp									Soil Cuttings described
5	medium silty SAND brown, gravelly, damp									
	Lense of cobbles/gravel									
10	med. to fine silty SAND saturated (? from 10')									
15	lense of cobbles at 17' (or gravel)									
20	med. to fine sl. SAND saturated									
	— top of sl. SILT									flowing sand
25	— T.D. = 27'									
30										

? ▽

EXPLANATION

- ▼ Water Table (24 Hour)
- ▽ Water Table (Time of Boring)
- PID Photoionization Detection (ppm)
- NO. Identifies Sample by Number
- TYPE Sample Collection Method

SPLIT-BARREL; AUGER; ROCK CORE; THIN-WALLED TUBE; CONTINUOUS SAMPLER; NO RECOVERY

DEPTH Depth Top and Bottom of Sample
REC. Actual Length of Recovered Sample in Feet

GRAPHIC LOG LEGEND

CLAY; SILT; SAND; GRAVEL; SILTY CLAY; CLAYEY SILT; DEBRIS FILL; HIGHLY ORGANIC (PEAT); SANDY CLAY; CLAYEY SAND; SILTY SAND; ____

DATE DRILLED	PAGE
10-11-93	1 of 1

DRILLING METHOD: HSA w/plugged bottom

DRILLED BY: Western Technologies

LOGGED BY: J. F.

EXISTING GRADE ELEVATION (FT. AMSL):

LOCATION OR GRID COORDINATES:

KERR-McGEE CORPORATION
HYDROLOGY DEPARTMENT
MONITORING WELL INSTALLATION DIAGRAM

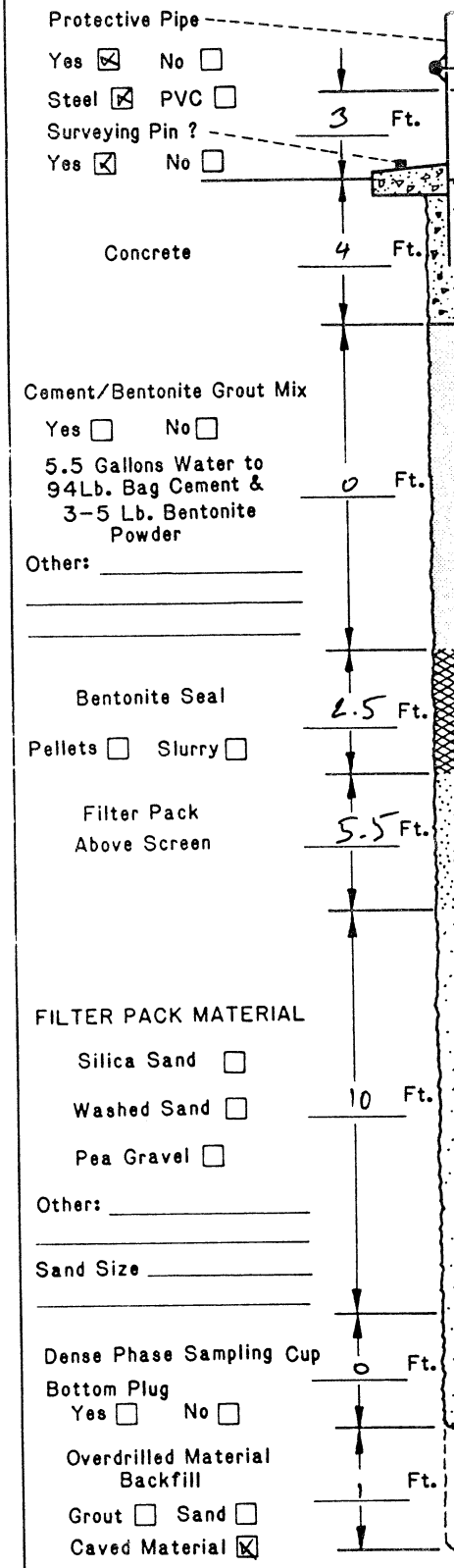

Concrete Pad 4 Ft. x 4 Ft. x 4 Inches

DRILLING INFORMATION:

1. Borehole Diameter= 8 1/2 Inches.
2. Were Drilling Additives Used ? Yes ☒ No ☐
   Revert ☐ Bentonite ☐ Water ☒
   Solid Auger ☐ Hollow Stem Auger ☐
3. Was Outer Steel Casing Used ? Yes ☐ No ☐
   Depth= _____ to _____ Feet.
4. Borehole Diameter for Outer Casing _____ Inches.

WELL CONSTRUCTION INFORMATION:

1. Type of Casing: PVC ☒ Galvanized ☐ Teflon ☐
   Stainless ☐ Other _____
2. Type of Casing Joints: Screw-Couple ☐ Glue-Couple ☐ Other _____
3. Type of Well Screen: PVC ☒ Galvanized ☐
   Stainless ☐ Teflon ☐ Other _____
4. Diameter of Casing and Well Screen:
   Casing 2 Inches, Screen 2 Inches.
5. Slot Size of Screen: 0.010
6. Type of Screen Perforation: Factory Slotted ☒
   Hacksaw ☐ Drilled ☐ Other _____
7. Installed Protector Pipe w/Lock: Yes ☒ No ☐

WELL DEVELOPMENT INFORMATION:

1. How was Well Developed ? Bailing ☐ Pumping ☒
   Air Surging (Air or Nitrogen) ☐ Other _____
2. Time Spent on Well Development ?
   _____ / _____ Minutes/Hours
3. Approximate Water Volume Removed ? _____ Gallons
4. Water Clarity Before Development ? Clear ☐
   Turbid ☐ Opaque ☐
5. Water Clarity After Development ? Clear ☐
   Turbid ☐ Opaque ☐
6. Did Water have Odor ? Yes ☐ No ☐
   If Yes, Describe _____
7. Did Water have any Color ? Yes ☐ No ☐
   If Yes , Describe _____

WATER LEVEL INFORMATION:

Water Level Summary (From Top of Casing)

During Drilling appr. 10 Ft. Date 10-11-93

Before Development _____ Ft. Date _____

After Development _____ Ft. Date _____

Driller/Firm Greg / Western Technologies Drill Rig Type _____ Date Installed 10-11-93

Drill Crew Rick Well No. M-95 Kerr-McGee Hydrologist Jan FAJGL

SOIL BORING LOG KM—5655-A

KERR-McGEE CORPORATION Hydrology Dept. Engineering Services	KM SUBSIDIARY Chemical	LOCATION Henderson, NE	BORING NUMBER M-96

DEPTH IN FEET	LITHOLOGIC DESCRIPTION	GRAPHIC LOG	UNIFIED SOIL FIELD CLASS.	BLOWS PER FOOT	PID (ppm)	SOIL SAMPLE NO.	SOIL SAMPLE TYPE	SOIL SAMPLE DEPTH	SOIL SAMPLE REC.	REMARKS OR FIELD OBSERVATIONS
0	brown fine to medium silty SAND, gravelly dry									SOIL CUTTINGS DESCRIBED
5	more gravel at 5'									
	brown fine to medium SAND, some gravel, damp to moist,									
10	same as above, saturated									
15	16.5' - lense of cobbles									
	brown fine to medium SAND, gravelly top of clayey SILT light brown									
20	TD = 22'									
25										
30										
35										
40										

appr. ▽

EXPLANATION

- ▼ Water Table (24 Hour)
- ▽ Water Table (Time of Boring)
- PID Photoionization Detection (ppm)
- NO. Identifies Sample by Number
- TYPE Sample Collection Method

SPLIT-BARREL · AUGER · ROCK CORE · THIN-WALLED TUBE · CONTINUOUS SAMPLER · NO RECOVERY

DEPTH Depth Top and Bottom of Sample
REC. Actual Length of Recovered Sample in Feet

GRAPHIC LOG LEGEND

CLAY · SILT · SAND · GRAVEL · SILTY CLAY · CLAYEY SILT · DEBRIS FILL · HIGHLY ORGANIC (PEAT) · SANDY CLAY · CLAYEY SAND · _____ · _____

DATE DRILLED	PAGE
10-12-93	1 of 1

DRILLING METHOD: HSA w/ plugged bottom

DRILLED BY: Western Technologies

LOGGED BY: J.F.

EXISTING GRADE ELEVATION (FT. AMSL):

LOCATION OR GRID COORDINATES:

KERR-McGEE CORPORATION
HYDROLOGY DEPARTMENT
MONITORING WELL INSTALLATION DIAGRAM

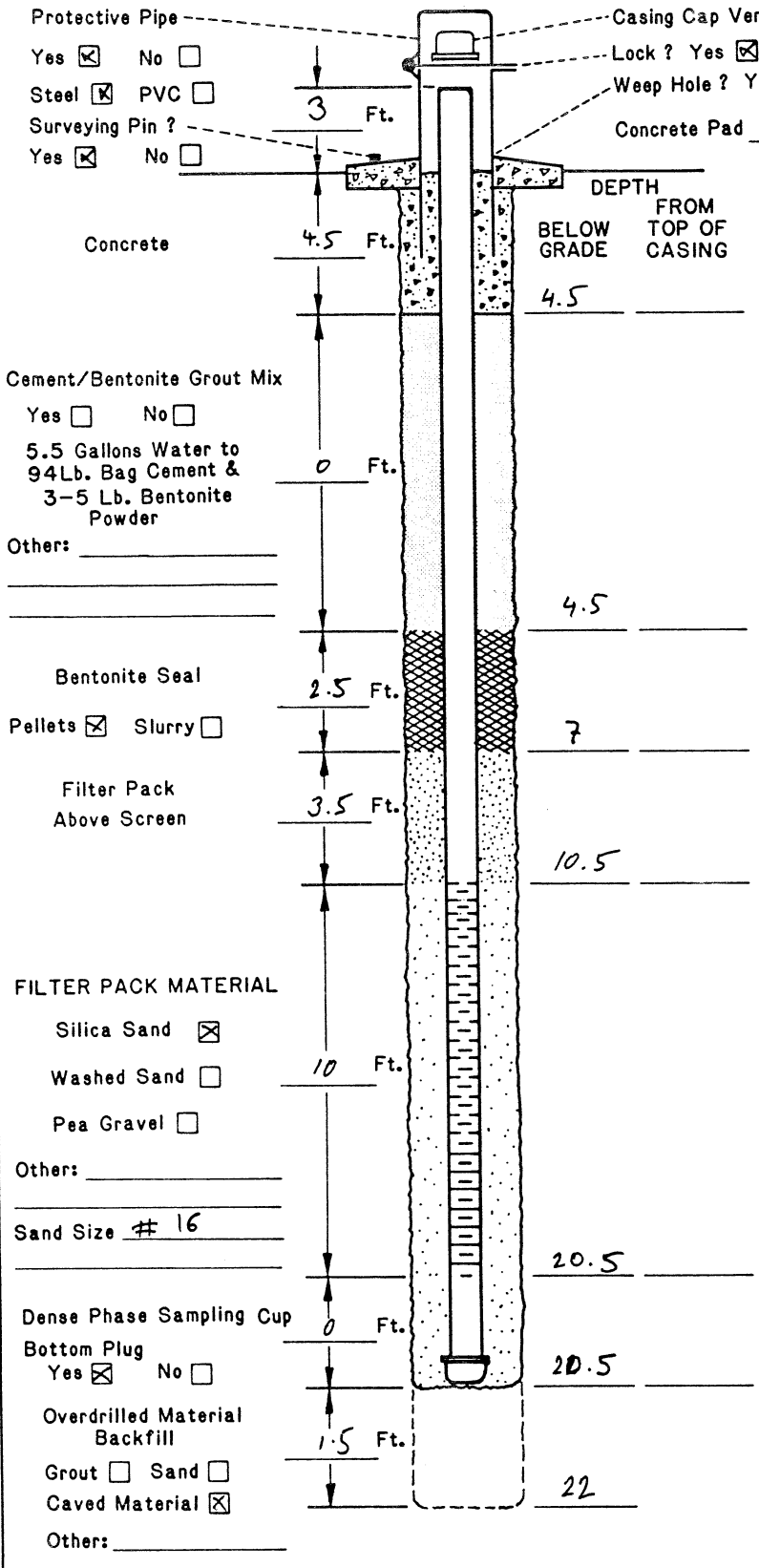

Concrete Pad 4 Ft. x 4 Ft. x 4 Inches

DRILLING INFORMATION:

1. Borehole Diameter= 8 1/2 Inches.
2. Were Drilling Additives Used ? Yes ☒ No ☐
   Revert ☐ Bentonite ☐ Water ☒
   Solid Auger ☐ Hollow Stem Auger ☐
3. Was Outer Steel Casing Used ? Yes ☐ No ☒
   Depth= _____ to _____ Feet.
4. Borehole Diameter for Outer Casing _____ Inches.

WELL CONSTRUCTION INFORMATION:

1. Type of Casing: PVC ☒ Galvanized ☐ Teflon ☐
   Stainless ☐ Other _____
2. Type of Casing Joints: Screw-Couple ☒ Glue-Couple ☐ Other _____
3. Type of Well Screen: PVC ☒ Galvanized ☐
   Stainless ☐ Teflon ☐ Other _____
4. Diameter of Casing and Well Screen:
   Casing 2 Inches, Screen 2 Inches.
5. Slot Size of Screen: 0.010"
6. Type of Screen Perforation: Factory Slotted ☒
   Hacksaw ☐ Drilled ☐ Other _____
7. Installed Protector Pipe w/Lock: Yes ☒ No ☐

WELL DEVELOPMENT INFORMATION:

1. How was Well Developed ? Bailing ☐ Pumping ☒
   Air Surging (Air or Nitrogen) ☐ Other _____
2. Time Spent on Well Development ?
   _____ / _____ Minutes/Hours
3. Approximate Water Volume Removed ? _____ Gallons
4. Water Clarity Before Development ? Clear ☐
   Turbid ☐ Opaque ☐
5. Water Clarity After Development ? Clear ☐
   Turbid ☐ Opaque ☐
6. Did Water have Odor ? Yes ☐ No ☐
   If Yes, Describe _____
7. Did Water have any Color ? Yes ☐ No ☐
   If Yes , Describe _____

WATER LEVEL INFORMATION:

Water Level Summary (From Top of Casing)

During Drilling appr. 9 Ft. Date 10-12-93

Before Development _____ Ft. Date _____

After Development _____ Ft. Date _____

Driller/Firm Greg/Western Techn. Drill Rig Type _____ Date Installed 10-12-93

Drill Crew Rick Well No. M-96 Kerr-McGee Hydrologist Jan FAJGL

NSR

SUBSURFACE EXPLORATION LOG

BORING NUMBER: M97

CLIENT: Kerr McGee Chemical Corporation
JOB NUMBER: 4020-004-250
LOCATION: Hendersen, NV
BORING LOCATION: Hardesty Chemical Site

GEOLOGIST: DJ Poehls
DATE DRILLED: 4/8/97
DRILLING COMPANY: Gregg Drilling & Testing
NORTHING: 17793.352

TOTAL DEPTH: 50 Feet
DRILLING METHOD: HSA
SAMPLE METHOD: SS
EASTING: 27491.925

DEPTH feet	SAMPLES	SAMPLE NUMBER	TIME	PID (ppm)	BLOW COUNT	RECOVERY %	GEOLOGIC DESCRIPTION	SOIL CLASS.	GRAPHIC LOG	DEPTH feet
				-			GRAVELLY SILT-well rounded gravel (up to 2cm), moderately loose, non plastic, dry, no structure, medium orangish brown, no stain, no odor.	ML		
5		NA			12 8 10	85	GRAVELLY SILTY SAND-alternating with silty sand, very poorly graded, gravel rounded to subrounded, loose, dry, medium brown, no stain, no odor.	SM		5
10		NA	1136	NA	12 21 27	80	Same as above with 6 inch zone of sandy gravel - well graded angular gravel to 3cm - dark gray, dry, moderately dense.	GW		10
15		NA	1147	NA	10 12 16	70	SILTY SAND-trace medium grain gravel, increasing silt (30%), dry, medium brown, no stain, earthy odor.	SM		15
							CALICHE	Caliche		
20		NA	1155	NA	24 14 10	40	GRAVELLY SILT-little sand, soft caliche nodules, carbonate gravel, angular to 3cm, very well graded, dry, light reddish brown. nodular caliche			20
25		NA	1200	NA	5 14 15	0	SILT "MC" GRAVELLY SILTY-possibly very fine grain sand, little very fine grain gravel, subangular, HCL ractive, dry, light brown.	ML		25
30		NA	1215	NA	16 50/5"	10	SILT-compacted, stratified, HCL reactive, dry, firm to very firm.			30
35		NA	1220	NA	5 5 5	40	CLAY - SILTY CLAY-moist, no gravel, very slightly plastic, soft, orangish brown, no stain, no odor.	CL		35
40		NA	1235		5 5 9	100				40

SAMPLER TYPE
SS - SPLIT SPOON
ST - PRESSED SHELBY TUBE
HA - HAND SAMPLER
CC - CONTINUOUS CORE

BORING METHOD
HSA - HOLLOW STEM AUGER
CFA - CONTINUOUS FLIGHT AUGER
HA - HAND AUGER
MD - MUD DRILLING

ENSR

SUBSURFACE EXPLORATION LOG

BORING NUMBER: M97

CLIENT: Kerr McGee Chemical Corporation
JOB NUMBER: 4020-004-250
LOCATION: Hendersen, NV
BORING LOCATION: Hardesty Chemical Site

GEOLOGIST: DJ Poehls
DATE DRILLED: 4/8/97
DRILLING COMPANY: Gregg Drilling & Testing
NORTHING: 17793.352

TOTAL DEPTH: 50 Feet
DRILLING METHOD: HSA
SAMPLE METHOD: SS
EASTING: 27491.925

DEPTH feet	SAMPLES	SAMPLE NUMBER	TIME	PID (ppm)	BLOW COUNT	RECOVERY %	GEOLOGIC DESCRIPTION	SOIL CLASS.	GRAPHIC LOG	DEPTH feet
							GRAVELLY CLAY-very fine grain gravel, HCL reactive, some coarse angular gravel, moist to wet, orangish brown, no stain, no odor.			
							Saturated soils			
45		NA	1245	NA	7 12 15	80	GRAVELLY CLAY-bottom of sampler (last 6 iches moist), medium grain, angular gravel in moist to dry clay matrix, slightly plastic, orangish brown.	CL		45
50		NA	1406	NA	6 6 11	70	SANDY CLAY-very coarse grain sand in clay matrix, moist, moderately plastic, soft, medium orangish brown, no stain, no odor.			50
							2" PVC monitoring well installed.			
							Screen interval 35-45 ft. bgs.			55
							Initial water level at 39.28 ft. bgs.			
										60
										65
70										70
75										75
80										80

SAMPLER TYPE

SS - SPLIT SPOON
ST - PRESSED SHELBY TUBE
HA - HAND SAMPLER
CC - CONTINUOUS CORE

BORING METHOD

HSA - HOLLOW STEM AUGER
CFA - CONTINUOUS FLIGHT AUGER
HA - HAND AUGER
MD - MUD DRILLING

Project No. 4020-004-250 Client: Kerr McGee Chemical Site: Hendersen, NV

Well No. **M97**

Well Loc. Hardesty Chemical Date Inst. 8-Apr-97

Contractor: Gregg Drilling & Testing Method: Hollow-Stem Auger

Well No. **M97**

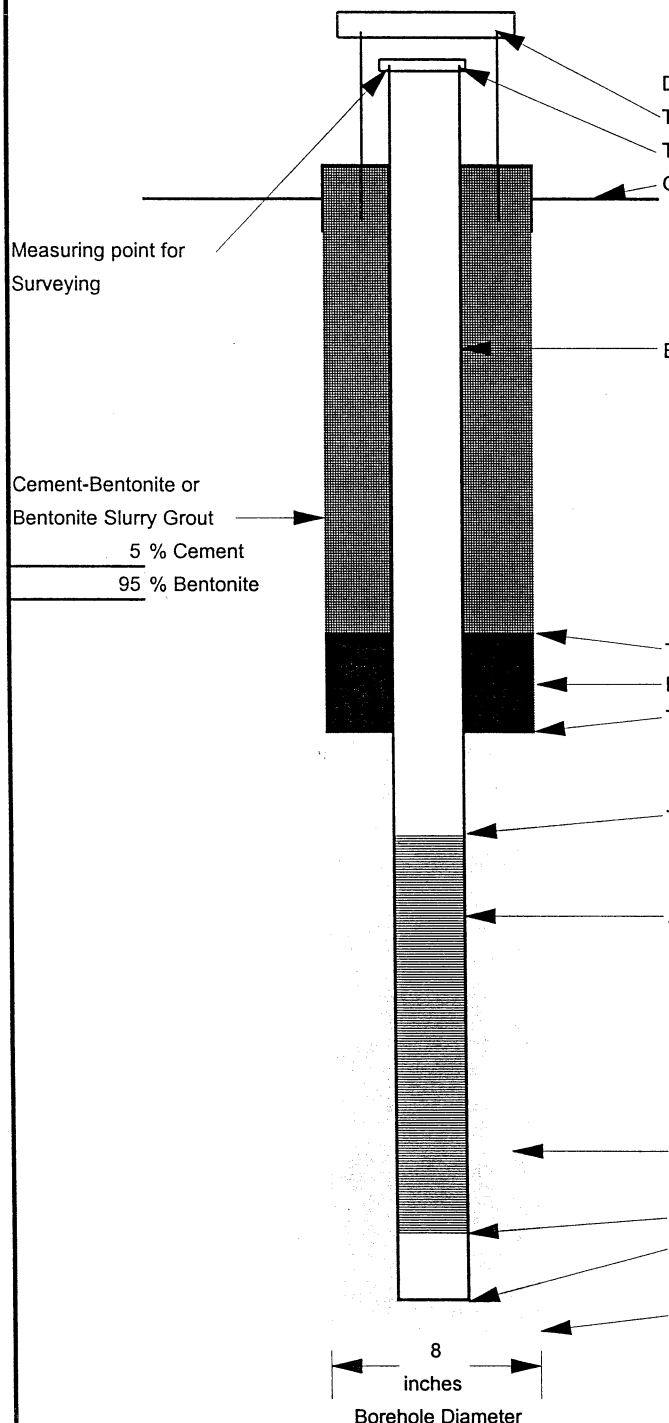

Description	Other	Depth Above/Below (+/-) G.S. (ft.)
Top of Protective Casing		0.00
Top of Casing (TOC)		0.00
Ground Surface (G.S.)		0.00
Blank Casing		
Length (ft.)	37.0	
Nominal Diameter (inches)	2.0	
Type of Material	PVC Sch. 40	
Top of Bentonite Seal		30.00
Bentonite Seal Thick. (ft.)	2.0	
Top of Sand		32.00
Top of Screen		35.00
Screen		
Length (feet)	10.0	
Nominal Diameter (in)	2.0	
Slot Size (inches)	0.01	
Type of Material	SS	
Filter Pack		
Bottom of Screen		45.00
Bottom of Tailpipe:		45.50
Length (feet)	0.50	
Bottom of Borehole		50.00

Water Level Summary (from Top of Casing)

During Drilling	42	Ft. Date	4/8/97
Before Development	39.28	Ft. Date	4/8/97
After Development		Ft. Date	

SOIL BORING LOG KM—5655-A

KERR-McGEE CORPORATION Hydrology Dept. Engineering Services	KM SUBSIDIARY Chemical	LOCATION Henderson, NV	BORING NUMBER M-98

DEPTH IN FEET	LITHOLOGIC DESCRIPTION	GRAPHIC LOG	UNIFIED SOIL FIELD CLASS.	BLOWS PER FOOT	PID (ppm)	SOIL SAMPLE NO.	SOIL SAMPLE TYPE	SOIL SAMPLE DEPTH	SOIL SAMPLE REC.	REMARKS OR FIELD OBSERVATIONS
5	Tan To reddish brown silty fine sand with variable small To medium gravel in thin layers. Alluvial Sequence		GM							
10										
15										
20										
25	Sequence of caliche and gray coarse sand		SP					24-25	0.5	1100
								25-26	0.5	1105
	Hard red silty clay		CL					28-29	0.5	1115
30	Reddish-brown silty clay		CL					29-30	0.5	1120
	TD 31 Feet									
35			CL							

EXPLANATION

- ▼ Water Table (24 Hour)
- ▽ Water Table (Time of Boring)
- PID Photoionization Detection (ppm)
- NO. Identifies Sample by Number
- TYPE Sample Collection Method

SPLIT-BARREL · AUGER · ROCK CORE · THIN-WALLED TUBE · CONTINUOUS SAMPLER · NO RECOVERY

DEPTH Depth Top and Bottom of Sample
REC. Actual Length of Recovered Sample in Feet

GRAPHIC LOG LEGEND

CLAY · SILT · SAND · GRAVEL · SILTY CLAY · CLAYEY SILT · DEBRIS FILL · HIGHLY ORGANIC (PEAT) · SANDY CLAY · CLAYEY SAND · _____ · _____

DATE DRILLED	12-4-98
PAGE	1 of 1
DRILLING METHOD	Hollow Stem Auger
DRILLED BY	Compliance Drilling
LOGGED BY	Steve Lower
EXISTING GRADE ELEVATION (FT. AMSL)	
LOCATION OR GRID COORDINATES	

KERR-McGEE CORPORATION
HYDROLOGY DEPARTMENT
MONITORING WELL INSTALLATION DIAGRAM

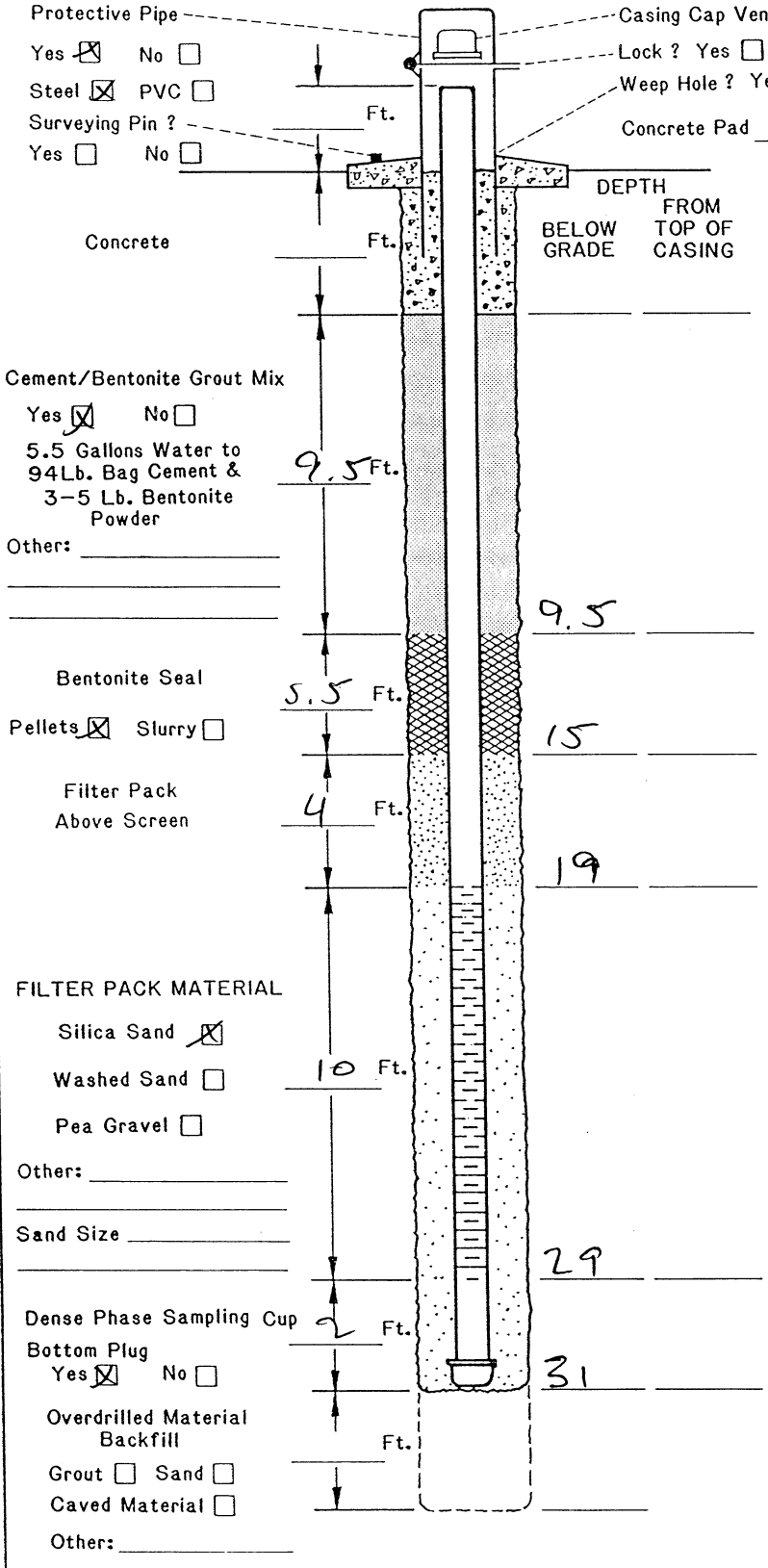

DRILLING INFORMATION:

1. Borehole Diameter= 6.25 Inches.
2. Were Drilling Additives Used ? Yes ☐ No ☒
   Revert ☐ Bentonite ☐ Water ☐
   Solid Auger ☐ Hollow Stem Auger ☒
3. Was Outer Steel Casing Used ? Yes ☐ No ☒
   Depth= _____ to _____ Feet.
4. Borehole Diameter for Outer Casing _____ Inches.

WELL CONSTRUCTION INFORMATION:

1. Type of Casing: PVC ☒ Galvanized ☐ Teflon ☐
   Stainless ☐ Other _____
2. Type of Casing Joints: Screw-Couple ☒ Glue-Couple ☐ Other _____
3. Type of Well Screen: PVC ☒ Galvanized ☐
   Stainless ☐ Teflon ☐ Other _____
4. Diameter of Casing and Well Screen:
   Casing 2 Inches, Screen 2 Inches.
5. Slot Size of Screen: 0.020
6. Type of Screen Perforation: Factory Slotted ☒
   Hacksaw ☐ Drilled ☐ Other _____
7. Installed Protector Pipe w/Lock: Yes ☒ No ☐

WELL DEVELOPMENT INFORMATION:

1. How was Well Developed ? Bailing ☐ Pumping ☒
   Air Surging (Air or Nitrogen) ☐ Other _____
2. Time Spent on Well Development ?
   _____ / _____ Minutes/Hours
3. Approximate Water Volume Removed ? _____ Gallons
4. Water Clarity Before Development ? Clear ☐
   Turbid ☐ Opaque ☐
5. Water Clarity After Development ? Clear ☐
   Turbid ☐ Opaque ☐
6. Did Water have Odor ? Yes ☐ No ☐
   If Yes, Describe _____
7. Did Water have any Color ? Yes ☐ No ☐
   If Yes , Describe _____

WATER LEVEL INFORMATION:

Water Level Summary (From Top of Casing)

During Drilling _____ Ft. Date _____
Before Development _____ Ft. Date _____
After Development _____ Ft. Date _____

Driller/Firm Compliance Drilling Drill Rig Type Mobile B-59 Date Installed 12-3-98
Drill Crew Lee Robertson Well No. M-98 Kerr-McGee Hydrologist Steve Lower

SOIL BORING LOG KM—5655-A

KERR-McGEE CORPORATION Hydrology Dept. Engineering Services	KM SUBSIDIARY Chemical	LOCATION Henderson, NV	BORING NUMBER MW-99

DEPTH IN FEET	LITHOLOGIC DESCRIPTION	GRAPHIC LOG	UNIFIED SOIL FIELD CLASS.	BLOWS PER FOOT	PID (ppm)	SOIL SAMPLE NO.	SOIL SAMPLE TYPE	SOIL SAMPLE DEPTH	SOIL SAMPLE REC.	REMARKS OR FIELD OBSERVATIONS
5	Tan to reddish brown silty fine sand with variable small to medium Gravel in thin layers Alluvial Sequence		GM							
20										
25	Sequence of caliche and gray coarse sand		SP				X	27-28	1'	0930
30	Hard red silty clay		CL				X	30-31	1'	1000
	reddish-brown silty clay		CL							
35	TD 34 Feet									

EXPLANATION

- ▼ Water Table (24 Hour)
- ▽ Water Table (Time of Boring)
- PID Photoionization Detection (ppm)
- NO. Identifies Sample by Number
- TYPE Sample Collection Method
- SPLIT-BARREL
- AUGER
- ROCK CORE
- THIN-WALLED TUBE
- CONTINUOUS SAMPLER
- NO RECOVERY
- DEPTH Depth Top and Bottom of Sample
- REC. Actual Length of Recovered Sample in Feet

GRAPHIC LOG LEGEND

- CLAY
- SILT
- SAND
- GRAVEL
- SILTY CLAY
- CLAYEY SILT
- DEBRIS FILL
- HIGHLY ORGANIC (PEAT)
- SANDY CLAY
- CLAYEY SAND
- ☐ _____
- ☐ _____

DATE DRILLED: 12-3-98 | PAGE: 1 of 1

DRILLING METHOD: Hollow Stem Auger

DRILLED BY: Cornerstone Drilling

LOGGED BY: Steve Lauer

EXISTING GRADE ELEVATION (FT. AMSL)

LOCATION OR GRID COORDINATES

KERR-McGEE CORPORATION
HYDROLOGY DEPARTMENT
MONITORING WELL INSTALLATION DIAGRAM

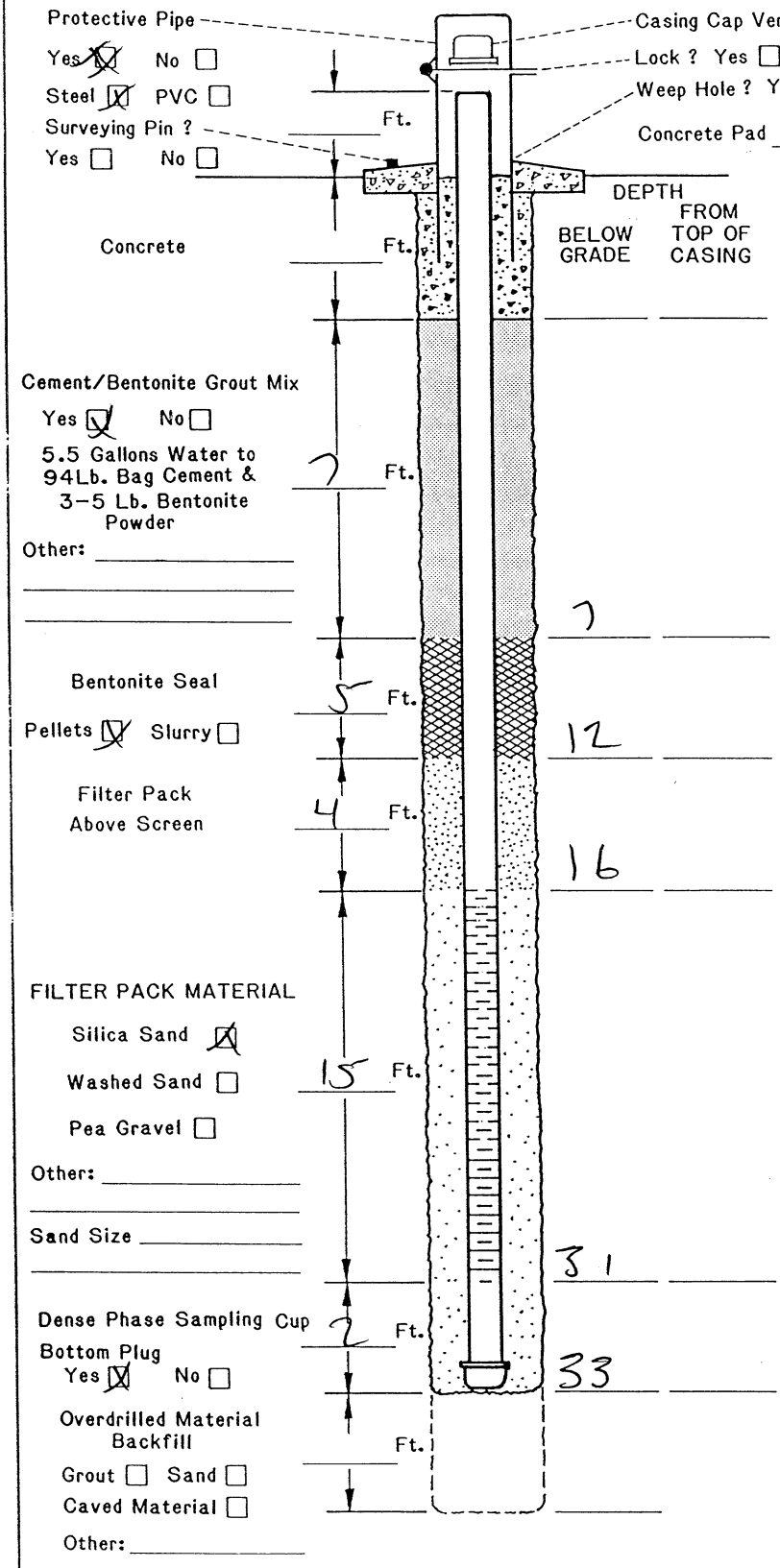

DRILLING INFORMATION:

1. Borehole Diameter= 6.25 Inches.
2. Were Drilling Additives Used ? Yes ☐ No ☒
   Revert ☐ Bentonite ☐ Water ☐
   Solid Auger ☐ Hollow Stem Auger ☒
3. Was Outer Steel Casing Used ? Yes ☐ No ☒
   Depth= ____ to ____ Feet.
4. Borehole Diameter for Outer Casing ____ Inches.

WELL CONSTRUCTION INFORMATION:

1. Type of Casing: PVC ☒ Galvanized ☐ Teflon ☐
   Stainless ☐ Other ____
2. Type of Casing Joints: Screw-Couple ☒ Glue-Couple ☐ Other ____
3. Type of Well Screen: PVC ☒ Galvanized ☐
   Stainless ☐ Teflon ☐ Other ____
4. Diameter of Casing and Well Screen:
   Casing 2 Inches, Screen 2 Inches.
5. Slot Size of Screen: 0.020
6. Type of Screen Perforation: Factory Slotted ☒
   Hacksaw ☐ Drilled ☐ Other ____
7. Installed Protector Pipe w/Lock: Yes ☒ No ☐

WELL DEVELOPMENT INFORMATION:

1. How was Well Developed ? Bailing ☐ Pumping ☐
   Air Surging (Air or Nitrogen) ☐ Other ____
2. Time Spent on Well Development ?
   ____ / ____ Minutes/Hours
3. Approximate Water Volume Removed ? ____ Gallons
4. Water Clarity Before Development ? Clear ☐
   Turbid ☐ Opaque ☐
5. Water Clarity After Development ? Clear ☐
   Turbid ☐ Opaque ☐
6. Did Water have Odor ? Yes ☐ No ☐
   If Yes, Describe ____
7. Did Water have any Color ? Yes ☐ No ☐
   If Yes , Describe ____

WATER LEVEL INFORMATION:

Water Level Summary (From Top of Casing)

During Drilling ____ Ft. Date ____
Before Development ____ Ft. Date ____
After Development ____ Ft. Date ____

Driller/Firm Compliance Drilling Drill Rig Type Mobile B-59 Date Installed 12-3-98

Drill Crew Lee Richardson Well No. M-99 Kerr-McGee Hydrologist Steve Lower

SOIL BORING LOG KM—5655-A

KERR-McGEE CORPORATION Hydrology Dept. Engineering Services	KM SUBSIDIARY Chemical	LOCATION Henderson, NV	BORING NUMBER hm-100

DEPTH IN FEET	LITHOLOGIC DESCRIPTION	GRAPHIC LOG	UNIFIED SOIL FIELD CLASS.	BLOWS PER FOOT	PID (ppm)	SOIL SAMPLE NO.	SOIL SAMPLE TYPE	SOIL SAMPLE DEPTH	SOIL SAMPLE REC.	REMARKS OR FIELD OBSERVATIONS
5	Tan to reddish brown silty sand with variable small to medium gravel in thin layer		GM							
10										
15	Alluvial Sequence									
20										
25	Sequence of caliche and gray coarse sand		SP							
30	Hard silty clay		CL				X	28-29.5	1.5	1200
	Reddish-brown Silty Clay		CL							
35	TD 31 ft									

EXPLANATION

- ▼ Water Table (24 Hour)
- ▽ Water Table (Time of Boring)
- PID Photoionization Detection (ppm)
- NO. Identifies Sample by Number
- TYPE Sample Collection Method

SPLIT-BARREL; AUGER; ROCK CORE; THIN-WALLED TUBE; CONTINUOUS SAMPLER; NO RECOVERY

- DEPTH Depth Top and Bottom of Sample
- REC. Actual Length of Recovered Sample in Feet

GRAPHIC LOG LEGEND

CLAY; SILT; SAND; GRAVEL; SILTY CLAY; CLAYEY SILT; DEBRIS FILL; HIGHLY ORGANIC (PEAT); SANDY CLAY; CLAYEY SAND

DATE DRILLED	12-3-98
PAGE	1 of 1
DRILLING METHOD	Hollow Stem Auger
DRILLED BY	Compliance Drilling
LOGGED BY	Steve Lower
EXISTING GRADE ELEVATION (FT. AMSL)	
LOCATION OR GRID COORDINATES	

KERR-McGEE CORPORATION
HYDROLOGY DEPARTMENT
MONITORING WELL INSTALLATION DIAGRAM

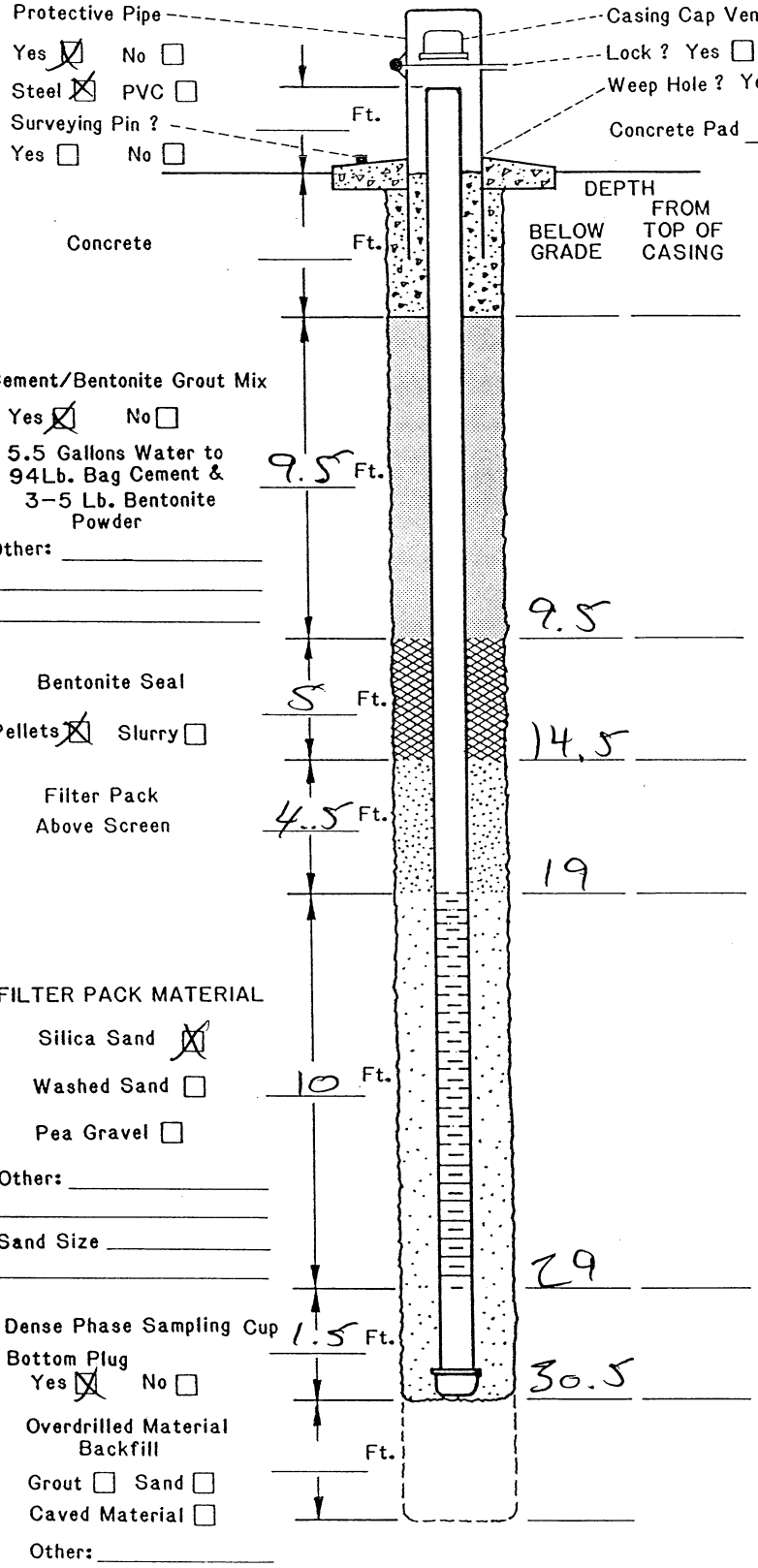

DRILLING INFORMATION:

1. Borehole Diameter= 6.25 Inches.
2. Were Drilling Additives Used ? Yes ☐ No ☒
   Revert ☐ Bentonite ☐ Water ☐
   Solid Auger ☐ Hollow Stem Auger ☒
3. Was Outer Steel Casing Used ? Yes ☐ No ☒
   Depth= _____ to _____ Feet.
4. Borehole Diameter for Outer Casing _____ Inches.

WELL CONSTRUCTION INFORMATION:

1. Type of Casing: PVC ☒ Galvanized ☐ Teflon ☐
   Stainless ☐ Other _____
2. Type of Casing Joints: Screw-Couple ☒ Glue-Couple ☐ Other _____
3. Type of Well Screen: PVC ☒ Galvanized ☐
   Stainless ☐ Teflon ☐ Other _____
4. Diameter of Casing and Well Screen:
   Casing 2 Inches, Screen 2 Inches.
5. Slot Size of Screen: 0.020
6. Type of Screen Perforation: Factory Slotted ☒
   Hacksaw ☐ Drilled ☐ Other _____
7. Installed Protector Pipe w/Lock: Yes ☒ No ☐

WELL DEVELOPMENT INFORMATION:

1. How was Well Developed ? Bailing ☐ Pumping ☒
   Air Surging (Air or Nitrogen) ☐ Other _____
2. Time Spent on Well Development ?
   _____ / _____ Minutes/Hours
3. Approximate Water Volume Removed ? _____ Gallons
4. Water Clarity Before Development ? Clear ☐
   Turbid ☐ Opaque ☐
5. Water Clarity After Development ? Clear ☐
   Turbid ☐ Opaque ☐
6. Did Water have Odor ? Yes ☐ No ☐
   If Yes, Describe _____
7. Did Water have any Color ? Yes ☐ No ☐
   If Yes , Describe _____

WATER LEVEL INFORMATION:

Water Level Summary (From Top of Casing)

During Drilling _____ Ft. Date _____
Before Development _____ Ft. Date _____
After Development _____ Ft. Date _____

Driller/Firm Cont. Land Drilling Drill Rig Type Mobile B-59 Date Installed 12-3-98
Drill Crew Lee Robertson Well No. M-100 Kerr-McGee Hydrologist Steve Lower

SOIL BORING LOG KM—5655-A

KERR-McGEE CORPORATION Hydrology Dept. Engineering Services	KM SUBSIDIARY Chemical	LOCATION Henderson, NV	BORING NUMBER M-101

DEPTH IN FEET	LITHOLOGIC DESCRIPTION	GRAPHIC LOG	UNIFIED SOIL FIELD CLASS.	BLOWS PER FOOT	PID (ppm)	SOIL SAMPLE NO.	TYPE	DEPTH	REC.	REMARKS OR FIELD OBSERVATIONS
5	Tan to reddish brown silty fine sand with variable small to medium Gravel in thin layers									
10	Alluvial Sequence		GM							
15										
20										
25	Sequence of caliche and gray coarse sand		SP							
	Hard red silty clay		CL				X	26.5-27.5	1	1440
30	Reddish brown silty clay TD 30 Feet		CL							
35										

EXPLANATION

- ▼ Water Table (24 Hour)
- ▽ Water Table (Time of Boring)
- PID Photoionization Detection (ppm)
- NO. Identifies Sample by Number
- TYPE Sample Collection Method
- SPLIT-BARREL
- AUGER
- ROCK CORE
- THIN-WALLED TUBE
- CONTINUOUS SAMPLER
- NO RECOVERY
- DEPTH Depth Top and Bottom of Sample
- REC. Actual Length of Recovered Sample in Feet

GRAPHIC LOG LEGEND

- CLAY
- DEBRIS FILL
- SILT
- HIGHLY ORGANIC (PEAT)
- SAND
- SANDY CLAY
- GRAVEL
- CLAYEY SAND
- SILTY CLAY
- CLAYEY SILT

DATE DRILLED	12-3-98
PAGE	1 of 1
DRILLING METHOD	Hollow Stem Auger
DRILLED BY	Compliance Drilling
LOGGED BY	Steve Lower
EXISTING GRADE ELEVATION (FT. AMSL)	
LOCATION OR GRID COORDINATES	

KERR-McGEE CORPORATION
HYDROLOGY DEPARTMENT
MONITORING WELL INSTALLATION DIAGRAM

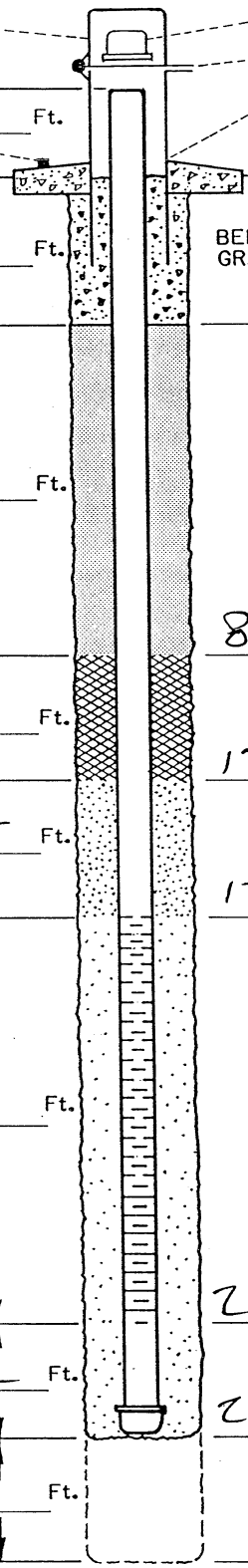

Protective Pipe
Yes [X] No [ ]
Steel [X] PVC [ ]
Surveying Pin ? Yes [ ] No [ ]

Casing Cap Vent ? Yes [ ] No [ ]
Lock ? Yes [ ] No [ ]
Weep Hole ? Yes [ ] No [ ]
Concrete Pad _____ Ft. x _____ Ft. x _____ Inches

	Ft.	DEPTH BELOW GRADE	DEPTH FROM TOP OF CASING
Concrete			
Cement/Bentonite Grout Mix Yes [X] No [ ] 5.5 Gallons Water to 94Lb. Bag Cement & 3-5 Lb. Bentonite Powder Other: _____	8	8	
Bentonite Seal Pellets [X] Slurry [ ]	4	12	
Filter Pack Above Screen	5	17	
FILTER PACK MATERIAL Silica Sand [X] Washed Sand [ ] Pea Gravel [ ] Other: _____ Sand Size _____	10	27	
Dense Phase Sampling Cup Bottom Plug Yes [X] No [ ]	2	29	
Overdrilled Material Backfill Grout [ ] Sand [ ] Caved Material [ ] Other: _____			

DRILLING INFORMATION:

1. Borehole Diameter= 6.25 Inches.
2. Were Drilling Additives Used ? Yes [ ] No [X]
   Revert [ ] Bentonite [ ] Water [ ]
   Solid Auger [ ] Hollow Stem Auger [X]
3. Was Outer Steel Casing Used ? Yes [ ] No [X]
   Depth= _____ to _____ Feet.
4. Borehole Diameter for Outer Casing _____ Inches.

WELL CONSTRUCTION INFORMATION:

1. Type of Casing: PVC [X] Galvanized [ ] Teflon [ ]
   Stainless [ ] Other _____
2. Type of Casing Joints: Screw-Couple [X] Glue-Couple [ ] Other _____
3. Type of Well Screen: PVC [X] Galvanized [ ]
   Stainless [ ] Teflon [ ] Other _____
4. Diameter of Casing and Well Screen:
   Casing 2 Inches, Screen 2 Inches.
5. Slot Size of Screen: 0.020
6. Type of Screen Perforation: Factory Slotted [X]
   Hacksaw [ ] Drilled [ ] Other _____
7. Installed Protector Pipe w/Lock: Yes [X] No [ ]

WELL DEVELOPMENT INFORMATION:

1. How was Well Developed ? Bailing [ ] Pumping [X]
   Air Surging (Air or Nitrogen) [ ] Other _____
2. Time Spent on Well Development ?
   _____/_____ Minutes/Hours
3. Approximate Water Volume Removed ? _____ Gallons
4. Water Clarity Before Development ? Clear [ ]
   Turbid [ ] Opaque [ ]
5. Water Clarity After Development ? Clear [ ]
   Turbid [ ] Opaque [ ]
6. Did Water have Odor ? Yes [ ] No [ ]
   If Yes, Describe _____
7. Did Water have any Color ? Yes [ ] No [ ]
   If Yes, Describe _____

WATER LEVEL INFORMATION:

Water Level Summary (From Top of Casing)

During Drilling _____ Ft. Date _____
Before Development _____ Ft. Date _____
After Development _____ Ft. Date _____

Driller/Firm Compliance Drilling Drill Rig Type Mobile B-59 Date Installed 12-3-98
Drill Crew Lee Robertson Well No. M-101 Kerr-McGee Hydrologist Steve Lower

SOIL BORING LOG KM—5655-A

KERR-McGEE CORPORATION Hydrology Dept. Engineering Services	KM SUBSIDIARY Chemical	LOCATION Henderson, NV	BORING NUMBER hm-107

DEPTH IN FEET	LITHOLOGIC DESCRIPTION	GRAPHIC LOG	UNIFIED SOIL FIELD CLASS.	BLOWS PER FOOT	PID (ppm)	SOIL SAMPLE NO.	SOIL SAMPLE TYPE	SOIL SAMPLE DEPTH	SOIL SAMPLE REC.	REMARKS OR FIELD OBSERVATIONS
5	Tan to reddish brown silty sand with variable small to medium gravel in thin layers Alluvial sequence		GM				X	35-36	0.5'	1630
10										
15										
20										
25										
30										
35	Sequence of caliche and gray coarse sand		SP							
40	Thin hard silty clay reddish-brown silty clay		CL				X	38.5-39.5		1650

▼ Water Table (24 Hour) TD 42'

▽ Water Table (Time of Boring)

PID Photoionization Detection (ppm)

NO. Identifies Sample by Number

TYPE Sample Collection Method

SPLIT-BARREL | AUGER | ROCK CORE

THIN-WALLED TUBE | CONTINUOUS SAMPLER | NO RECOVERY

DEPTH Depth Top and Bottom of Sample

REC. Actual Length of Recovered Sample in Feet

EXPLANATION

GRAPHIC LOG LEGEND

CLAY	DEBRIS FILL
SILT	HIGHLY ORGANIC (PEAT)
SAND	SANDY CLAY
GRAVEL	CLAYEY SAND
SILTY CLAY	
CLAYEY SILT	

DATE DRILLED

PAGE of

DRILLING METHOD

DRILLED BY

LOGGED BY

EXISTING GRADE ELEVATION (FT. AMSL)

LOCATION OR GRID COORDINATES

KERR-McGEE CORPORATION
HYDROLOGY DEPARTMENT
MONITORING WELL INSTALLATION DIAGRAM

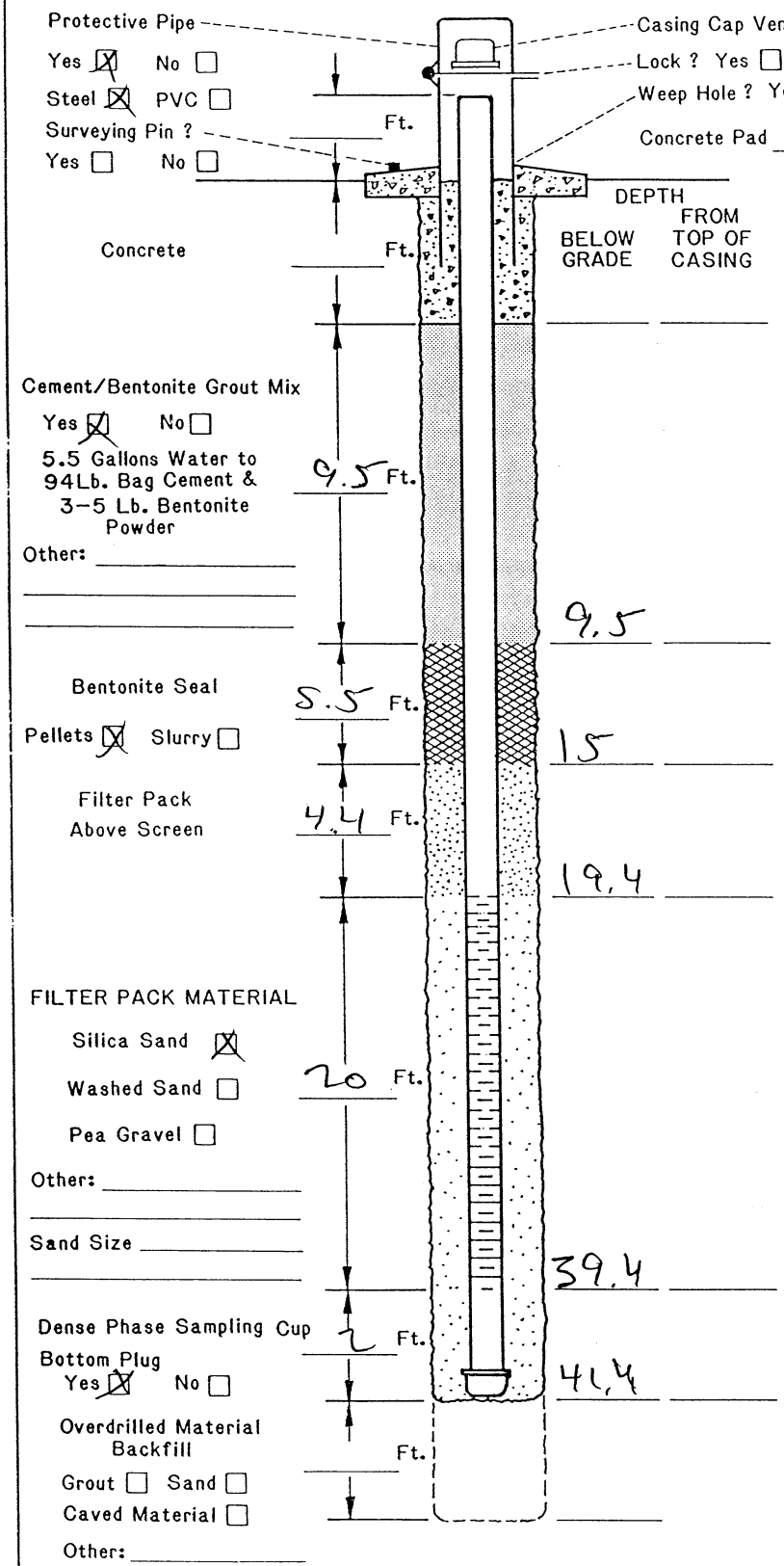

DRILLING INFORMATION:

1. Borehole Diameter= 6.25 Inches.
2. Were Drilling Additives Used ? Yes [ ] No [X]
   Revert [ ] Bentonite [ ] Water [ ]
   Solid Auger [ ] Hollow Stem Auger [X]
3. Was Outer Steel Casing Used ? Yes [ ] No [X]
   Depth= _____ to _____ Feet.
4. Borehole Diameter for Outer Casing _____ Inches.

WELL CONSTRUCTION INFORMATION:

1. Type of Casing: PVC [X] Galvanized [ ] Teflon [ ]
   Stainless [ ] Other _____
2. Type of Casing Joints: Screw-Couple [X] Glue-Couple [ ] Other _____
3. Type of Well Screen: PVC [X] Galvanized [ ]
   Stainless [ ] Teflon [ ] Other _____
4. Diameter of Casing and Well Screen:
   Casing 2 Inches, Screen 2 Inches.
5. Slot Size of Screen: 0.020
6. Type of Screen Perforation: Factory Slotted [X]
   Hacksaw [ ] Drilled [ ] Other _____
7. Installed Protector Pipe w/Lock: Yes [X] No [ ]

WELL DEVELOPMENT INFORMATION:

1. How was Well Developed ? Bailing [ ] Pumping [X]
   Air Surging (Air or Nitrogen) [ ] Other _____
2. Time Spent on Well Development ?
   _____ / _____ Minutes/Hours
3. Approximate Water Volume Removed ? _____ Gallons
4. Water Clarity Before Development ? Clear [ ]
   Turbid [ ] Opaque [ ]
5. Water Clarity After Development ? Clear [ ]
   Turbid [ ] Opaque [ ]
6. Did Water have Odor ? Yes [ ] No [ ]
   If Yes, Describe _____
7. Did Water have any Color ? Yes [ ] No [ ]
   If Yes , Describe _____

WATER LEVEL INFORMATION:

Water Level Summary (From Top of Casing)

During Drilling _____ Ft. Date _____
Before Development _____ Ft. Date _____
After Development _____ Ft. Date _____

Driller/Firm Compliance Drilling Drill Rig Type Mobile B59 Date Installed 12-4-98
Drill Crew Lee Robertson Well No. M-102 Kerr-McGee Hydrologist Steve Lower

SOIL BORING LOG KM-5655-B

KERR-McGEE CORPORATION Hydrology Dept. - S&EA Division	KM SUBSIDIARY KMC LLC	LOCATION Henderson NV	BORING NUMBER M 103

DEPTH IN FEET	LITHOLOGIC DESCRIPTION	GRAPHIC LOG	UNIFIED SOIL FIELD CLASS.	BLOWS PER 6"	PID (ppm)	SOIL SAMPLE NO.	SOIL SAMPLE TYPE	SOIL SAMPLE DEPTH	SOIL SAMPLE REC.	REMARKS OR FIELD OBSERVATIONS
0	0-35 silty SAND and interbedded GRAVEL * Gry orange (10 YR 7/4) 70% SAND - 30% GRAVEL sd is vf-vc, A-SR, w/ 10-15% silt. Grav. SA-SR 1/8"-3" com CaO_3 cement * Probably fining-upward fluvial sequences		SM-GM							
20	20-22 boulders, basalt-andesite, up to 5"-6" Com caliche cement									
35	35-43 sdy GRAVEL, pea gravel size w/ minor grav. to 3". 40% vf-vc, SA-SR sd		GW							

EXPLANATION

- Water Table (24 Hour)
- Water Table (Time of Boring)
- PID Photoionization Detection (ppm)
- NO. Identifies Sample by Number
- TYPE Sample Collection Method
- SPLIT-BARREL
- AUGER
- ROCK CORE
- THIN-WALLED TUBE
- CONTINUOUS SAMPLER
- NO RECOVERY
- DEPTH Depth Top and Bottom of Sample
- REC. Actual Length of Recovered Sample in Feet

GRAPHIC LOG LEGEND

- CLAY
- SILT
- SAND
- GRAVEL
- SILTY CLAY
- CLAYEY SILT
- DEBRIS FILL
- HIGHLY ORGANIC (PEAT)
- SANDY CLAY
- CLAYEY SAND

DATE DRILLED	PAGE
3/20 - 3/21/00	1 of 3
DRILLING METHOD: HSA	
DRILLED BY: Compliance	
LOGGED BY: Ed Krish	
EXISTING GRADE ELEVATION (FT. AMSL)	
LOCATION OR GRID COORDINATES	

SOIL BORING LOG KM-5655-B

KERR-McGEE CORPORATION Hydrology Dept. - S&EA Division	KM SUBSIDIARY KMC LLC	LOCATION HENDERSON NV	BORING NUMBER M-103

DEPTH IN FEET	LITHOLOGIC DESCRIPTION	GRAPHIC LOG	UNIFIED SOIL FIELD CLASS.	BLOWS PER 6"	PID (ppm)	SOIL SAMPLE NO.	SOIL SAMPLE TYPE	SOIL SAMPLE DEPTH	SOIL SAMPLE REC.	REMARKS OR FIELD OBSERVATIONS
			GW							
43	43-49 sdy SILT w/ minor pea gravel granules (volc) and caliche nodules. mod brn (5YR 5/4)		ML					MCfg		@ 43' damp
50	49-90 silty SAND w/ mod-com volc granules mod brn (5YR 5/4) - 20-25% silt. 10-15% granules sd. is vf-m. A-SR calcareous w/ minor scattered sm. caliche nodules.		SM					MCcg		
60										
65	64-65.5 silty gravelly SAND. Mod brn (5YR 5/4) 20-30% silt, 20% pea gravel. Sand vf-f w/ minor mg. Calcareous (gravel is volc.). Minor to com caliche nodules							3-22-00		Split Spoon @ 64'-65.25' 50 blows for 1.25' 68'-72' wet perched WTR @ 72' damp
70										
75	72-82 silty SAND w/ minor pea gravel and com. granule size caliche nodules. mod brn. Calcareous. 20-25% silt.							Hard @ 82'		83' (caliche) WTR below

EXPLANATION

- ▼ Water Table (24 Hour)
- ▽ Water Table (Time of Boring)
- PID Photoionization Detection (ppm)
- NO. Identifies Sample by Number
- TYPE Sample Collection Method
- SPLIT-BARREL
- AUGER
- ROCK CORE
- THIN-WALLED TUBE
- CONTINUOUS SAMPLER
- NO RECOVERY
- DEPTH Depth Top and Bottom of Sample
- REC. Actual Length of Recovered Sample in Feet

GRAPHIC LOG LEGEND

- CLAY
- SILT
- SAND
- GRAVEL
- SILTY CLAY
- CLAYEY SILT
- DEBRIS FILL
- HIGHLY ORGANIC (PEAT)
- SANDY CLAY
- CLAYEY SAND
- _____
- _____

DATE DRILLED	3/20-3/21/00
PAGE	2 of 3
DRILLING METHOD	HSA
DRILLED BY	COMPLIANCE
LOGGED BY	ED KRISH
EXISTING GRADE ELEVATION (FT. AMSL)	
LOCATION OR GRID COORDINATES	

SOIL BORING LOG KM-5655-B

KERR-McGEE CORPORATION Hydrology Dept. - S&EA Division	KM SUBSIDIARY KMC LLC	LOCATION HENDERSON NV	BORING NUMBER M-103

DEPTH IN FEET	LITHOLOGIC DESCRIPTION	GRAPHIC LOG	UNIFIED SOIL FIELD CLASS.	BLOWS PER 6"	PID (ppm)	SOIL SAMPLE NO.	SOIL SAMPLE TYPE	SOIL SAMPLE DEPTH	SOIL SAMPLE REC.	REMARKS OR FIELD OBSERVATIONS
85	82-83 hard caliche layer 83-90 silty SAND w/ minor pea gravel (10%), mod brn 20-25% silt, sd is vf-m. A-SR		SM							▽ 3-21-00
90	TD 90'									

EXPLANATION

- ▼ Water Table (24 Hour)
- ▽ Water Table (Time of Boring)
- PID Photoionization Detection (ppm)
- NO. Identifies Sample by Number
- TYPE Sample Collection Method
  - SPLIT-BARREL
  - AUGER
  - ROCK CORE
  - THIN-WALLED TUBE
  - CONTINUOUS SAMPLER
  - NO RECOVERY
- DEPTH Depth Top and Bottom of Sample
- REC. Actual Length of Recovered Sample in Feet

GRAPHIC LOG LEGEND

- CLAY
- SILT
- SAND
- GRAVEL
- SILTY CLAY
- CLAYEY SILT
- DEBRIS FILL
- HIGHLY ORGANIC (PEAT)
- SANDY CLAY
- CLAYEY SAND
- _____
- _____

DATE DRILLED: 3/20-3/21/00

PAGE: 3 of 3

DRILLING METHOD: HSA

DRILLED BY: COMPLIANCE

LOGGED BY: ED KRISH

EXISTING GRADE ELEVATION (FT. AMSL)

LOCATION OR GRID COORDINATES

KERR-McGEE CORPORATION
HYDROLOGY DEPARTMENT
MONITORING WELL INSTALLATION DIAGRAM

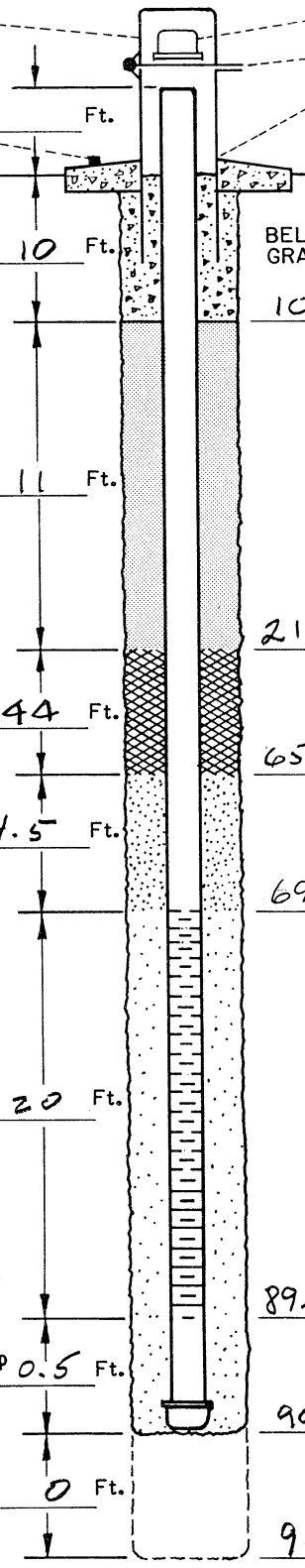

Protective Pipe
Yes ☐ No ☐
Steel ☐ PVC ☐
Surveying Pin ?
Yes ☐ No ☐
Ft.
Concrete 10 Ft.
Cement/Bentonite Grout Mix
Yes ☒ No ☐
5.5 Gallons Water to 94Lb. Bag Cement & 3-5 Lb. Bentonite Powder
11 Ft.
Other:
Bentonite Seal
44 Ft.
Pellets ☐ Slurry ☒
Filter Pack Above Screen
4.5 Ft.
FILTER PACK MATERIAL
Silica Sand ☐
Washed Sand ☒
20 Ft.
Pea Gravel ☐
Other:
Sand Size 3 mesh
Dense Phase Sampling Cup 0.5 Ft.
Bottom Plug
Yes ☐ No ☒
Overdrilled Material Backfill
0 Ft.
Grout ☐ Sand ☐
Caved Material ☒
Other:
Casing Cap Vent ? Yes ☐ No ☐
Lock ? Yes ☐ No ☐
Weep Hole ? Yes ☐ No ☐
Concrete Pad _____ Ft. x _____ Ft. x _____ Inches
DEPTH FROM TOP OF CASING
BELOW GRADE
10
21
65
69.5
89.5
90
90

DRILLING INFORMATION:

1. Borehole Diameter= 8 Inches.
2. Were Drilling Additives Used ? Yes ☐ No ☒
   Revert ☐ Bentonite ☐ Water ☐
   Solid Auger ☐ Hollow Stem Auger ☐
3. Was Outer Steel Casing Used ? Yes ☐ No ☒
   Depth= _____ to _____ Feet.
4. Borehole Diameter for Outer Casing _____ Inches.

WELL CONSTRUCTION INFORMATION:

1. Type of Casing: PVC ☒ Galvanized ☐ Teflon ☐
   Stainless ☐ Other _____
2. Type of Casing Joints: Screw-Couple ☒ Glue-Couple ☐ Other _____
3. Type of Well Screen: PVC ☒ Galvanized ☐
   Stainless ☐ Teflon ☐ Other _____
4. Diameter of Casing and Well Screen:
   Casing 2" Inches, Screen 2" Inches.
5. Slot Size of Screen: 0.02
6. Type of Screen Perforation: Factory Slotted ☒
   Hacksaw ☐ Drilled ☐ Other _____
7. Installed Protector Pipe w/Lock: Yes ☒ No ☐

WELL DEVELOPMENT INFORMATION:

1. How was Well Developed ? Bailing ☐ Pumping ☒
   Air Surging (Air or Nitrogen) ☐ Other _____
2. Time Spent on Well Development ?
   _____ / 60 Minutes/Hours
3. Approximate Water Volume Removed ? _____ Gallons
4. Water Clarity Before Development ? Clear ☐
   Turbid ☒ Opaque ☐
5. Water Clarity After Development ? Clear ☒
   Turbid ☐ Opaque ☐
6. Did Water have Oder ? Yes ☐ No ☒
   If Yes, Describe _____
7. Did Water have any Color ? Yes ☐ No ☒
   If Yes , Describe _____

WATER LEVEL INFORMATION:

Water Level Summary (From Top of Casing)

During Drilling 82' Ft. Date 3-21-00
Before Development 66.9 Ft. Date 3-22-00
After Development _____ Ft. Date _____

Driller/Firm COMPLIANCE Drill Rig Type Mobile Drill B-59 Date Installed 3-21-00
Drill Crew M. Wells, M. Loya Well No. M-103 Kerr-McGee Hydrologist E. KRISH

SOIL BORING LOG KM-5655-B

KERR-McGEE CORPORATION Hydrology Dept. - S&EA Division	KM SUBSIDIARY KMC LLC	LOCATION HENDERSON, NV	BORING NUMBER M104

DEPTH IN FEET	LITHOLOGIC DESCRIPTION	GRAPHIC LOG	UNIFIED SOIL FIELD CLASS.	BLOWS PER 6"	PID (ppm)	SOIL SAMPLE NO.	SOIL SAMPLE TYPE	SOIL SAMPLE DEPTH	SOIL SAMPLE REC.	REMARKS OR FIELD OBSERVATIONS
5	0-17 SAND, gravelly, lt brn (5YR 5/4), 10% silt vf-vc sd, A-SR, poorly sorted w/ 5-10% pea gravel + locally minor volc clasts to 3". Variably calichefied		SW							
	0-10 minor caliche nodules to 1/2"									
10	10-17 10-20% lg volc gravel and com. caliche nodules. Color change to v. pale orange (10YR8/2) @ 10'									
15										
17	17-35 SAND, sl. gravelly w/ com-abu caliche. tr silt, 5-10% volc pea gravel. Sd is f-c w/ minor vf+VC, A-SR. v. pale orange. Com sm caliche nodules.		SP/							
20										
25	local massive caliche.		SW							
	20'-22' 30-40% volc pea gravel in sd. 21'-22' hard silicified vug(?)									
	26-29' hard calichified sd									
30	30'-32' 20-30% pea gravel									damp @ 30'
	32'-35' hard calichified sd									dry 32-35'
35	35-52 SILT, cly, brn (5YR 5/4). Locally mod amts vf calcareous nodules (VC sd size to 1/2")		ML							MC @ 35' damp @ 35' (35'-80')

EXPLANATION

- ▼ Water Table (24 Hour)
- ▽ Water Table (Time of Boring)
- PID Photoionization Detection (ppm)
- NO. Identifies Sample by Number
- TYPE Sample Collection Method

SPLIT-BARREL · AUGER · ROCK CORE · THIN-WALLED TUBE · CONTINUOUS SAMPLER · NO RECOVERY

DEPTH Depth Top and Bottom of Sample
REC. Actual Length of Recovered Sample in Feet

GRAPHIC LOG LEGEND

CLAY · SILT · SAND · GRAVEL · SILTY CLAY · CLAYEY SILT · DEBRIS FILL · HIGHLY ORGANIC (PEAT) · SANDY CLAY · CLAYEY SAND

DATE DRILLED	PAGE
1-31-01	1 of 3

DRILLING METHOD: PERCUSSION
DRILLED BY: LAYNE
LOGGED BY: Ed KRISH
EXISTING GRADE ELEVATION (FT. AMSL):
LOCATION OR GRID COORDINATES:

SOIL BORING LOG KM-5655-B

KERR-McGEE CORPORATION Hydrology Dept. - S&EA Division	KM SUBSIDIARY KMC LLC	LOCATION HENDERSON, NV	BORING NUMBER M104

DEPTH IN FEET	LITHOLOGIC DESCRIPTION	GRAPHIC LOG	UNIFIED SOIL FIELD CLASS.	BLOWS PER 6"	PID (ppm)	SOIL SAMPLE NO.	SOIL SAMPLE TYPE	SOIL SAMPLE DEPTH	SOIL SAMPLE REC.	REMARKS OR FIELD OBSERVATIONS
40	40-44 mod-com calcareous nodules.		ML							
45										
50	50-52 com calcareous nodules									
52	52-74 SILT, sdy w/20-30% vfg, A-SA sd. brown (5 YR 5/4). sl. calcareous w/ minor c-vc size nodules locally		ML					60-61.5 sdy SILT		
55										
60										
65										
70										
74										
75	CLAY, slty, brn, sl. calcareous		CL							
	75-86 SILT, cly & sdy w/ 10% clay & 20% vfg, A-SA sd w/ tr. vcg.		ML							

EXPLANATION

- ▼ Water Table (24 Hour)
- ▽ Water Table (Time of Boring)
- PID Photoionization Detection (ppm)
- NO. Identifies Sample by Number
- TYPE Sample Collection Method

SPLIT-BARREL | AUGER | ROCK CORE | THIN-WALLED TUBE | CONTINUOUS SAMPLER | NO RECOVERY

DEPTH Depth Top and Bottom of Sample
REC. Actual Length of Recovered Sample in Feet

GRAPHIC LOG LEGEND

CLAY | DEBRIS FILL | SILT | HIGHLY ORGANIC (PEAT) | SAND | SANDY CLAY | GRAVEL | CLAYEY SAND | SILTY CLAY | _____ | CLAYEY SILT | _____

DATE DRILLED	PAGE
1-31-01	2 of 3

DRILLING METHOD: PERCUSSION

DRILLED BY: LAYNE

LOGGED BY: Ed Krish

EXISTING GRADE ELEVATION (FT. AMSL)

LOCATION OR GRID COORDINATES

SOIL BORING LOG KM-5655-B

KERR-McGEE CORPORATION Hydrology Dept. - S&EA Division	KM SUBSIDIARY KMCLLC	LOCATION HENDERSON, NV	BORING NUMBER M104

DEPTH IN FEET	LITHOLOGIC DESCRIPTION	GRAPHIC LOG	UNIFIED SOIL FIELD CLASS.	BLOWS PER 6"	PID (ppm)	SOIL SAMPLE NO.	SOIL SAMPLE TYPE	SOIL SAMPLE DEPTH	SOIL SAMPLE REC.	REMARKS OR FIELD OBSERVATIONS
85	Brown, minor sd size calc. nodules 82-86 mod sd size - ½" calcareous nodules.		ML				X	80-81.5 sdy silt		WET @ 80
	86-88 CLAY, silty, brn w/ 10% silt + 10% vfg sd		CL							
90	TD 88'									

EXPLANATION

- ▼ Water Table (24 Hour)
- ▽ Water Table (Time of Boring)
- PID Photoionization Detection (ppm)
- NO. Identifies Sample by Number
- TYPE Sample Collection Method

SPLIT-BARREL · AUGER · ROCK CORE · THIN-WALLED TUBE · CONTINUOUS SAMPLER · NO RECOVERY

DEPTH Depth Top and Bottom of Sample
REC. Actual Length of Recovered Sample in Feet

GRAPHIC LOG LEGEND

CLAY · SILT · SAND · GRAVEL · SILTY CLAY · CLAYEY SILT · DEBRIS FILL · HIGHLY ORGANIC (PEAT) · SANDY CLAY · CLAYEY SAND

DATE DRILLED	1-31-01
PAGE	3 of 3
DRILLING METHOD	PERCUSSION
DRILLED BY	LAYNE
LOGGED BY	E. KRISH
EXISTING GRADE ELEVATION (FT. AMSL)	
LOCATION OR GRID COORDINATES	

KERR-McGEE CORPORATION
HYDROLOGY DEPARTMENT
MONITORING WELL INSTALLATION DIAGRAM

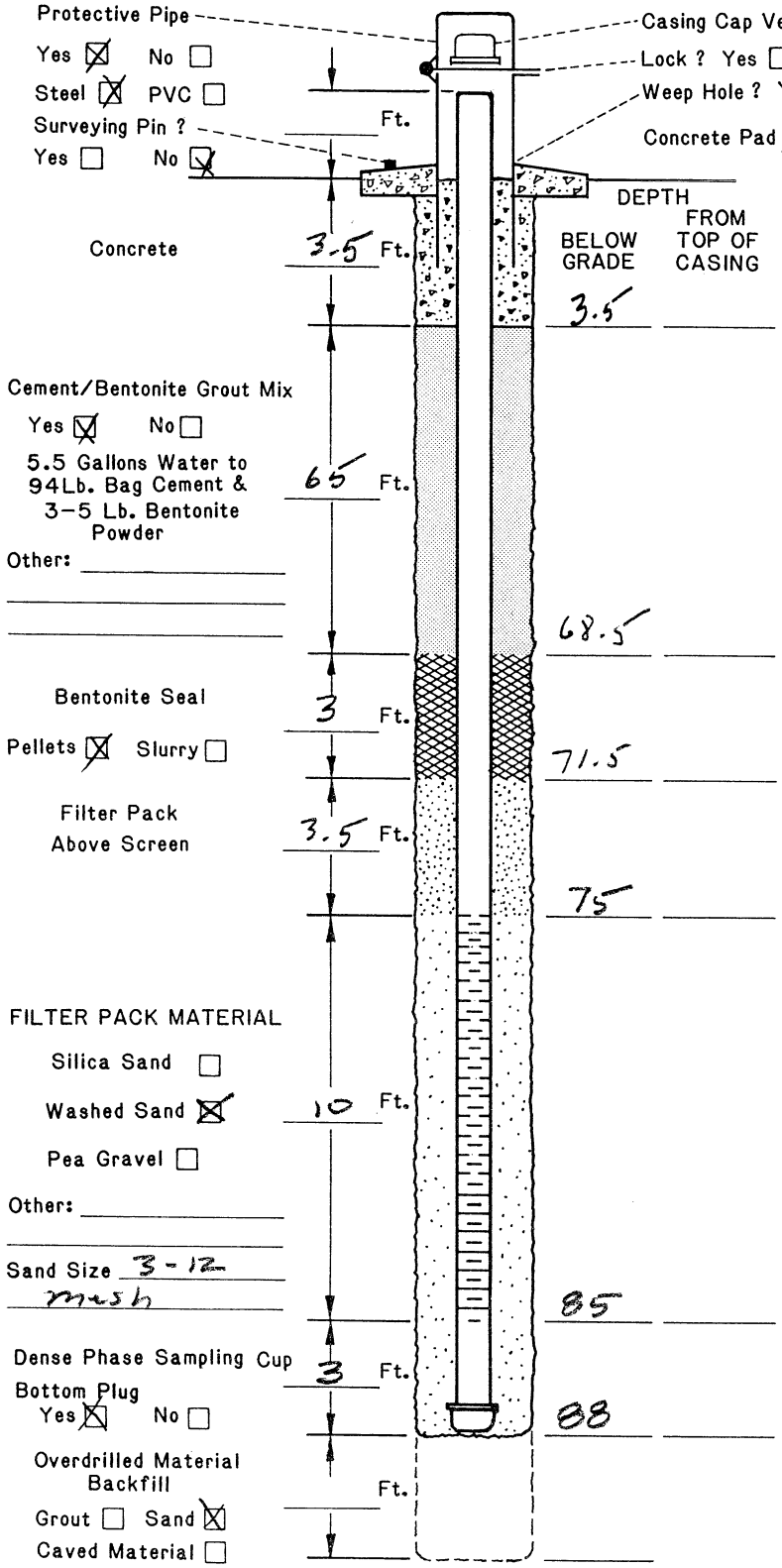

DRILLING INFORMATION:

1. Borehole Diameter= 9 Inches.
2. Were Drilling Additives Used ? Yes ☐ No ☒
   Revert ☐ Bentonite ☐ Water ☐
   Solid Auger ☐ Hollow Stem Auger ☐
3. Was Outer Steel Casing Used ? Yes ☐ No ☒
   Depth= _____ to _____ Feet.
4. Borehole Diameter for Outer Casing _____ Inches.

WELL CONSTRUCTION INFORMATION:

1. Type of Casing: PVC ☒ Galvanized ☐ Teflon ☐
   Stainless ☐ Other _____
2. Type of Casing Joints: Screw-Couple ☒ Glue-Couple ☐ Other _____
3. Type of Well Screen: PVC ☒ Galvanized ☐
   Stainless ☐ Teflon ☐ Other _____
4. Diameter of Casing and Well Screen:
   Casing 2" Inches, Screen 2" Inches.
5. Slot Size of Screen: 0.020
6. Type of Screen Perforation: Factory Slotted ☒
   Hacksaw ☐ Drilled ☐ Other _____
7. Installed Protector Pipe w/Lock: Yes ☒ No ☐

WELL DEVELOPMENT INFORMATION:

1. How was Well Developed ? Bailing ☐ Pumping ☒
   Air Surging (Air or Nitrogen) ☐ Other _____
2. Time Spent on Well Development ?
   _____/_____ Minutes/Hours
3. Approximate Water Volume Removed ? _____ Gallons
4. Water Clarity Before Development ? Clear ☒
   Turbid ☐ Opaque ☐
5. Water Clarity After Development ? Clear ☒
   Turbid ☐ Opaque ☐
6. Did Water have Odor ? Yes ☐ No ☐
   If Yes, Describe _____
7. Did Water have any Color ? Yes ☐ No ☐
   If Yes , Describe _____

WATER LEVEL INFORMATION:

Water Level Summary (From Top of Casing)

During Drilling 30 Ft. Date 1/31/01
Before Development 30.69 Ft. Date 1/2/01
After Development _____ Ft. Date _____

Driller/Firm LAYNE Drill Rig Type AP-1000 Date Installed 2-1-01
Drill Crew Perry Well No. M-104 Kerr-McGee Hydrologist Ed KRISH

SOIL BORING LOG KM-5655-B

KERR-McGEE CORPORATION Hydrology Dept. - S&EA Division	KM SUBSIDIARY KMCLLC	LOCATION HENDERSON, NV	BORING NUMBER M105

DEPTH IN FEET	LITHOLOGIC DESCRIPTION	GRAPHIC LOG	UNIFIED SOIL FIELD CLASS.	BLOWS PER 6"	PID (ppm)	SOIL SAMPLE NO.	SOIL SAMPLE TYPE	SOIL SAMPLE DEPTH	SOIL SAMPLE REC.	REMARKS OR FIELD OBSERVATIONS
	TD 67' M105 is 10' E of M104. See M104 lithology log for description									

EXPLANATION

- ▼ Water Table (24 Hour)
- ▽ Water Table (Time of Boring)
- PID Photoionization Detection (ppm)
- NO. Identifies Sample by Number
- TYPE Sample Collection Method

SPLIT-BARREL · AUGER · ROCK CORE · THIN-WALLED TUBE · CONTINUOUS SAMPLER · NO RECOVERY

DEPTH Depth Top and Bottom of Sample
REC. Actual Length of Recovered Sample in Feet

GRAPHIC LOG LEGEND

CLAY · DEBRIS FILL · SILT · HIGHLY ORGANIC (PEAT) · SAND · SANDY CLAY · GRAVEL · CLAYEY SAND · SILTY CLAY · CLAYEY SILT

DATE DRILLED	PAGE
2-1-01	1 of 1
DRILLING METHOD: PERCUSSION	
DRILLED BY: LAYNE	
LOGGED BY: Ed Krisl	
EXISTING GRADE ELEVATION (FT AMSL)	
LOCATION OR GRID COORDINATES	

KERR-McGEE CORPORATION
HYDROLOGY DEPARTMENT
MONITORING WELL INSTALLATION DIAGRAM

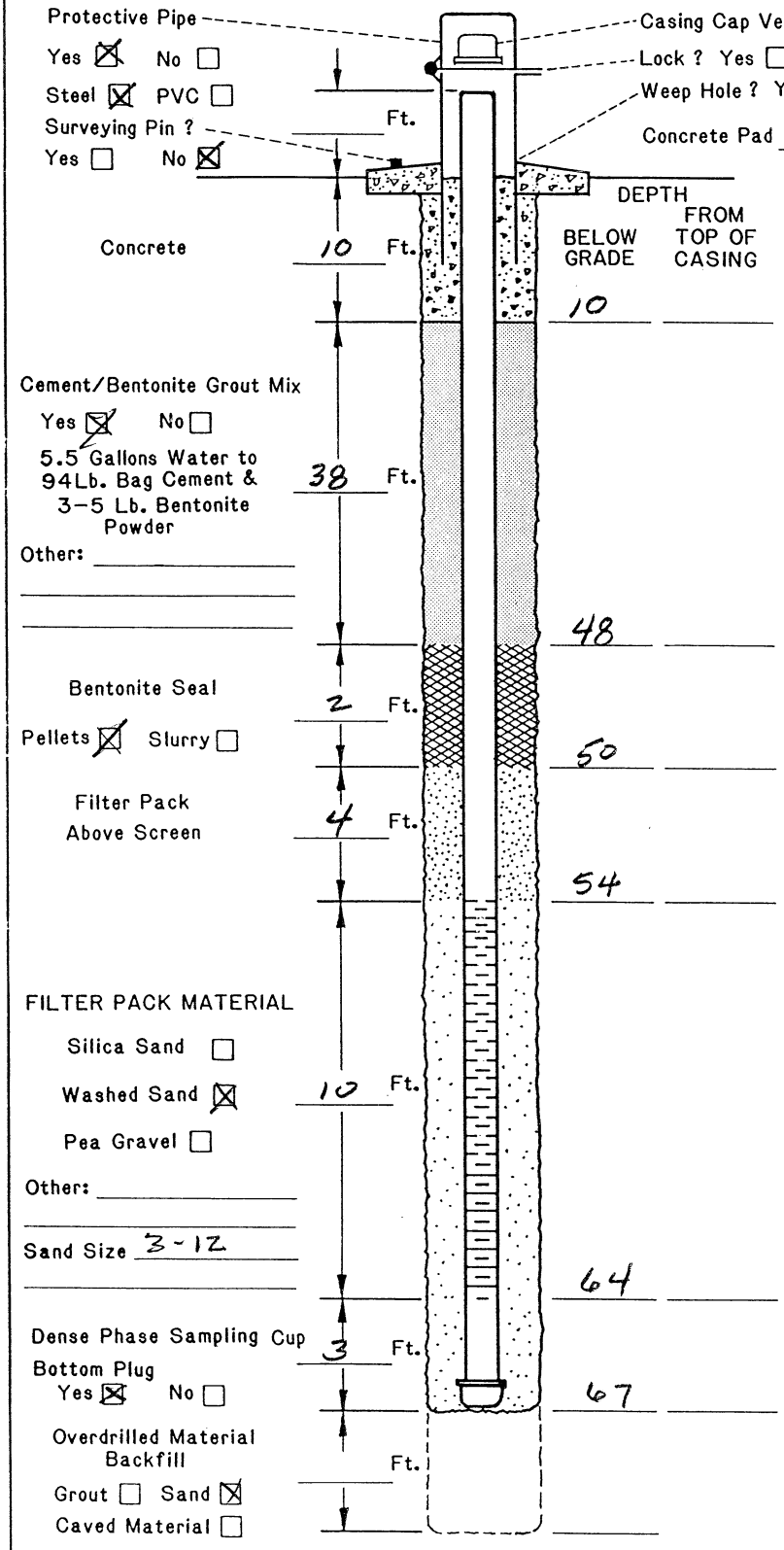

DRILLING INFORMATION:

1. Borehole Diameter= 9 Inches.
2. Were Drilling Additives Used ? Yes ☐ No ☒
   Revert ☐ Bentonite ☐ Water ☐
   Solid Auger ☐ Hollow Stem Auger ☐
3. Was Outer Steel Casing Used ? Yes ☐ No ☒
   Depth= _____ to _____ Feet.
4. Borehole Diameter for Outer Casing _____ Inches.

WELL CONSTRUCTION INFORMATION:

1. Type of Casing: PVC ☒ Galvanized ☐ Teflon ☐
   Stainless ☐ Other _____
2. Type of Casing Joints: Screw-Couple ☒ Glue-Couple ☐ Other _____
3. Type of Well Screen: PVC ☒ Galvanized ☐
   Stainless ☐ Teflon ☐ Other _____
4. Diameter of Casing and Well Screen:
   Casing 2 Inches, Screen 2 Inches.
5. Slot Size of Screen: 0.020
6. Type of Screen Perforation: Factory Slotted ☒
   Hacksaw ☐ Drilled ☐ Other _____
7. Installed Protector Pipe w/Lock: Yes ☒ No ☐

WELL DEVELOPMENT INFORMATION:

1. How was Well Developed ? Bailing ☐ Pumping ☒
   Air Surging (Air or Nitrogen) ☐ Other _____
2. Time Spent on Well Development ?
   _____ / _____ Minutes/Hours
3. Approximate Water Volume Removed ? _____ Gallons
4. Water Clarity Before Development ? Clear ☐
   Turbid ☐ Opaque ☐
5. Water Clarity After Development ? Clear ☐
   Turbid ☐ Opaque ☐
6. Did Water have Odor ? Yes ☐ No ☐
   If Yes, Describe _____
7. Did Water have any Color ? Yes ☐ No ☐
   If Yes , Describe _____

WATER LEVEL INFORMATION:

Water Level Summary (From Top of Casing)

During Drilling 30 Ft. Date 2-1-01

Before Development _____ Ft. Date _____

After Development _____ Ft. Date _____

Driller/Firm LAYNE Drill Rig Type AP-1000 Date Installed 2-2-01

Drill Crew Perry Well No. M105 Kerr-McGee Hydrologist Ed Krish

SOIL BORING LOG KM-5655-B

KERR-McGEE CORPORATION Hydrology Dept. - S&EA Division	KM SUBSIDIARY KMC LLC	LOCATION HENDERSON NV	BORING NUMBER M106

DEPTH IN FEET	LITHOLOGIC DESCRIPTION	GRAPHIC LOG	UNIFIED SOIL FIELD CLASS.	BLOWS PER 6"	PID (ppm)	SOIL SAMPLE NO.	SOIL SAMPLE TYPE	SOIL SAMPLE DEPTH	SOIL SAMPLE REC.	REMARKS OR FIELD OBSERVATIONS
4	0-4 Gravel, sdy, lt brn (5YR5/4), interbeds of sdy gravel and gravelly sd		GP							
	Sd 40-60%, vf-vcg, A-SR, Gravel 40-60, pea size to 1/2", volc, com caliche rinds on clasts. Sl. calcareous		SW							
9	4-9 SAND, gravelly, H brn, com calichification vf-vc, A-SR, w/ 10-20% volc pea gravel.									
15	9-20' SAND, gravelly & silty, lt brn. 10-20% silt in matrix, sd, vf-vc, A-SR, 25-35% pea gravel, volc, up to 2". Mod-com caliche rinds		GM							DAMP @ 15'
20										
25	20-28 SILT, lt brn (5YR5/4) w/ minor lt gry oran (10YR 8/4). Non-calcareous. Tr. vf-fg sd. 5-10% clay in matrix		ML							
28										
30	28-30 SILT, calcareous, lt brn. com. v. thin parallel calcareous laminae		ML							
	30-38 SILT, sdy and SAND, silty, interbedded, lt brn. SLT : SD = 70:30.		ML/ SM							WET @ 30'
35	vfg, A-SA sd, 20%, in SILT 30-40% SILT in sd									
38										
	38-42 SAND, silty, lt brn, vfg w/ 30-40% silt		SM							

EXPLANATION

- ▼ Water Table (24 Hour)
- ▽ Water Table (Time of Boring)
- PID Photoionization Detection (ppm)
- NO. Identifies Sample by Number
- TYPE Sample Collection Method
- SPLIT-BARREL
- AUGER
- ROCK CORE
- THIN-WALLED TUBE
- CONTINUOUS SAMPLER
- NO RECOVERY
- DEPTH Depth Top and Bottom of Sample
- REC. Actual Length of Recovered Sample in Feet

GRAPHIC LOG LEGEND

- CLAY
- SILT
- SAND
- GRAVEL
- SILTY CLAY
- CLAYEY SILT
- DEBRIS FILL
- HIGHLY ORGANIC (PEAT)
- SANDY CLAY
- CLAYEY SAND

DATE DRILLED	PAGE
2-2-01	1 of 2

DRILLING METHOD: PERCUSSION

DRILLED BY: LAYNE

LOGGED BY: ED KRISH

EXISTING GRADE ELEVATION (FT. AMSL):

LOCATION OR GRID COORDINATES:

SOIL BORING LOG KM-5655-B

KERR-McGEE CORPORATION Hydrology Dept. - S&EA Division	KM SUBSIDIARY KMC LLC	LOCATION Henderson NV	BORING NUMBER M-106

DEPTH IN FEET	LITHOLOGIC DESCRIPTION	GRAPHIC LOG	UNIFIED SOIL FIELD CLASS.	BLOWS PER 6"	PID (ppm)	SOIL SAMPLE NO.	SOIL SAMPLE TYPE	SOIL SAMPLE DEPTH	SOIL SAMPLE REC.	REMARKS OR FIELD OBSERVATIONS
42	sl. calcareous		SM							
	42-52 SILT, lt brn. w/ 10.0% clay and 10% vfg sd		ML							
45										
	42-47 mod calcareous lt. gry oran (10YR 8/4)									
50							X	50 – 51.5	100%	
	52-55 SILT, sdy, lt brn, 20-30% vfg sd.		ML							
55										
	55-64' SAND, silty. lt brn and paleoran (10YR 7/2) where calcareous. vfg, A-SA w/ 30-40% silt & 5-10% clay		SM							
60										
	58-62 calcareous									
64										
	64-75 SILT, sdy, lt brn, sl. calcareous. 20-25% vfg sd, 10% clay		ML							
70							X	70 – 71.5	100%	
75										
	75-78 SILT, sdy, 20% vfg, mottled lt. paleoran (10YR 8/2) & yell gry (5Y 8/1)		ML							
78	com. calc. nodules, tr. gyp. 10-15% clay in matrix									TD @ 78'

EXPLANATION

- ▼ Water Table (24 Hour)
- ▽ Water Table (Time of Boring)
- PID Photoionization Detection (ppm)
- NO. Identifies Sample by Number
- TYPE Sample Collection Method

SPLIT-BARREL; AUGER; ROCK CORE; THIN-WALLED TUBE; CONTINUOUS SAMPLER; NO RECOVERY

- DEPTH Depth Top and Bottom of Sample
- REC. Actual Length of Recovered Sample in Feet

GRAPHIC LOG LEGEND

CLAY; SILT; SAND; GRAVEL; SILTY CLAY; CLAYEY SILT; DEBRIS FILL; HIGHLY ORGANIC (PEAT); SANDY CLAY; CLAYEY SAND

DATE DRILLED	PAGE
2-2-01	2 of 2

DRILLING METHOD: Percussion

DRILLED BY: LAYNE

LOGGED BY: Ed Krish

EXISTING GRADE ELEVATION (FT. AMSL)

LOCATION OR GRID COORDINATES

KERR-McGEE CORPORATION
HYDROLOGY DEPARTMENT
MONITORING WELL INSTALLATION DIAGRAM

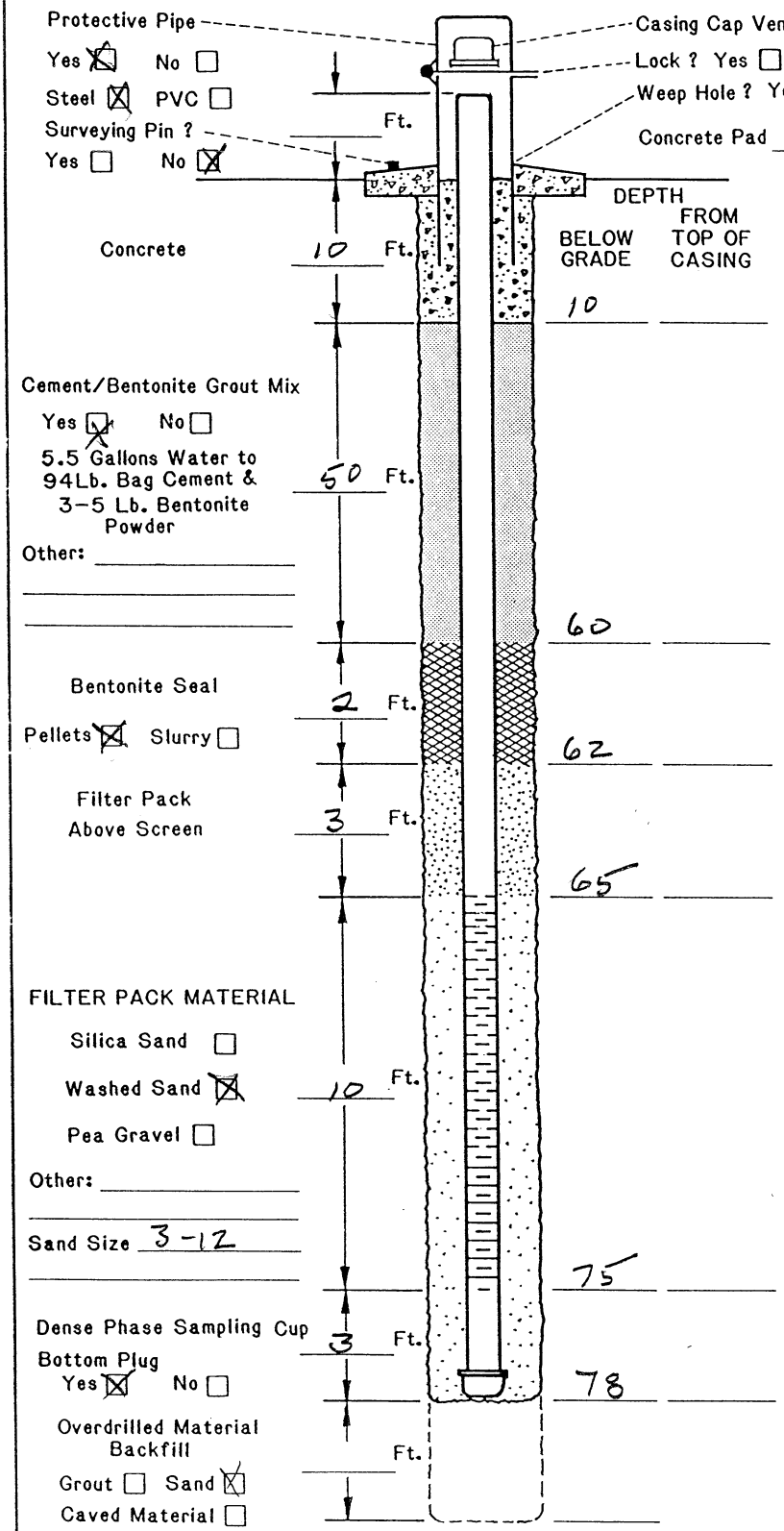

DRILLING INFORMATION:

1. Borehole Diameter= 9 Inches.
2. Were Drilling Additives Used ? Yes ☐ No ☒
   Revert ☐ Bentonite ☐ Water ☐
   Solid Auger ☐ Hollow Stem Auger ☐
3. Was Outer Steel Casing Used ? Yes ☐ No ☒
   Depth= _____ to _____ Feet.
4. Borehole Diameter for Outer Casing _____ Inches.

WELL CONSTRUCTION INFORMATION:

1. Type of Casing: PVC ☒ Galvanized ☐ Teflon ☐
   Stainless ☐ Other _____
2. Type of Casing Joints: Screw-Couple ☒ Glue-Couple ☐ Other _____
3. Type of Well Screen: PVC ☒ Galvanized ☐
   Stainless ☐ Teflon ☐ Other _____
4. Diameter of Casing and Well Screen:
   Casing 2 Inches, Screen 2 Inches.
5. Slot Size of Screen: 0.020
6. Type of Screen Perforation: Factory Slotted ☒
   Hacksaw ☐ Drilled ☐ Other _____
7. Installed Protector Pipe w/Lock: Yes ☒ No ☐

WELL DEVELOPMENT INFORMATION:

1. How was Well Developed ? Bailing ☐ Pumping ☒
   Air Surging (Air or Nitrogen) ☐ Other _____
2. Time Spent on Well Development ?
   _____/_____ Minutes/Hours
3. Approximate Water Volume Removed ? _____ Gallons
4. Water Clarity Before Development ? Clear ☐
   Turbid ☐ Opaque ☐
5. Water Clarity After Development ? Clear ☐
   Turbid ☐ Opaque ☐
6. Did Water have Oder ? Yes ☐ No ☐
   If Yes, Describe _____
7. Did Water have any Color ? Yes ☐ No ☐
   If Yes , Describe _____

WATER LEVEL INFORMATION:

Water Level Summary (From Top of Casing)

During Drilling 20 Ft. Date 2-2-01

Before Development _____ Ft. Date _____

After Development _____ Ft. Date _____

Driller/Firm LAYNE Drill Rig Type AP-1000 Date Installed 2-2-01

Drill Crew PERRY Well No. M-106 Kerr-McGee Hydrologist Ed Krish

SOIL BORING LOG KM-5655-B

KERR-McGEE CORPORATION Hydrology Dept. - S&EA Division	KM SUBSIDIARY KMC LLC	LOCATION HENDERSON, NV	BORING NUMBER M107

DEPTH IN FEET	LITHOLOGIC DESCRIPTION	GRAPHIC LOG	UNIFIED SOIL FIELD CLASS.	BLOWS PER 6"	PID (ppm)	SOIL SAMPLE NO.	SOIL SAMPLE TYPE	SOIL SAMPLE DEPTH	SOIL SAMPLE REC.	REMARKS OR FIELD OBSERVATIONS
	TD 57' M107 is 10' S of M106. SEE M106 lith log for description									

EXPLANATION

- ▼ Water Table (24 Hour)
- ▽ Water Table (Time of Boring)
- PID Photoionization Detection (ppm)
- NO. Identifies Sample by Number
- TYPE Sample Collection Method
- SPLIT-BARREL
- AUGER
- ROCK CORE
- THIN-WALLED TUBE
- CONTINUOUS SAMPLER
- NO RECOVERY
- DEPTH Depth Top and Bottom of Sample
- REC. Actual Length of Recovered Sample in Feet

GRAPHIC LOG LEGEND

- CLAY
- SILT
- SAND
- GRAVEL
- SILTY CLAY
- CLAYEY SILT
- DEBRIS FILL
- HIGHLY ORGANIC (PEAT)
- SANDY CLAY
- CLAYEY SAND
- _____
- _____

DATE DRILLED	PAGE
2-2-01	1 of 1

DRILLING METHOD: PERCUSSION

DRILLED BY: LAYNE

LOGGED BY: Ed Krish

EXISTING GRADE ELEVATION (FT. AMSL)

LOCATION OR GRID COORDINATES

KERR-McGEE CORPORATION
HYDROLOGY DEPARTMENT
MONITORING WELL INSTALLATION DIAGRAM

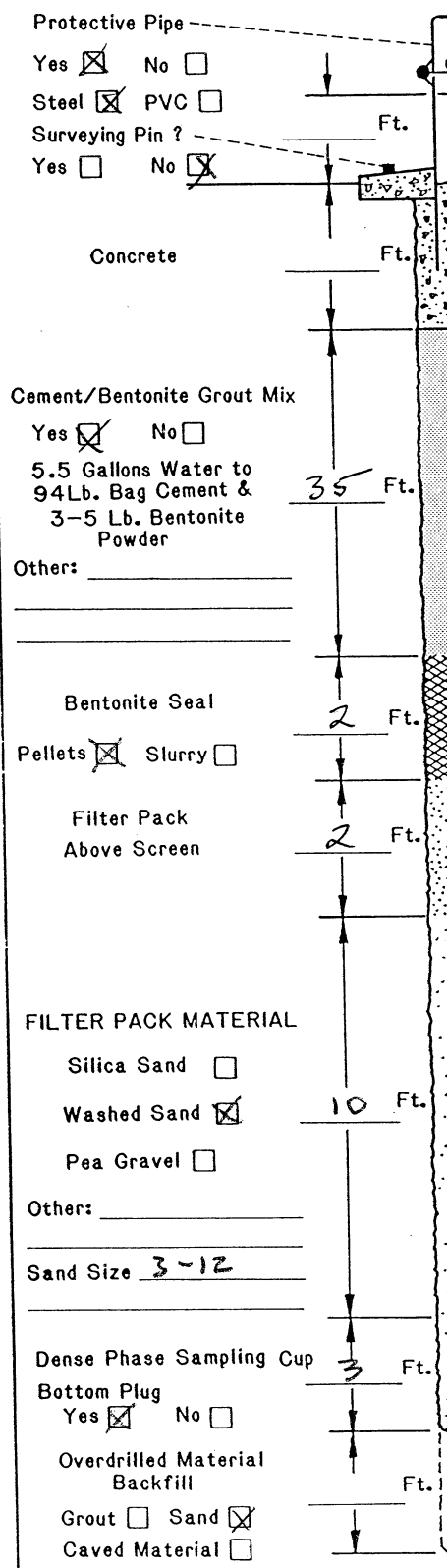

DRILLING INFORMATION:

1. Borehole Diameter= 9 Inches.
2. Were Drilling Additives Used ? Yes ☐ No ☒
   Revert ☐ Bentonite ☐ Water ☐
   Solid Auger ☐ Hollow Stem Auger ☐
3. Was Outer Steel Casing Used ? Yes ☐ No ☒
   Depth= _____ to _____ Feet.
4. Borehole Diameter for Outer Casing _____ Inches.

WELL CONSTRUCTION INFORMATION:

1. Type of Casing: PVC ☒ Galvanized ☐ Teflon ☐
   Stainless ☐ Other _____
2. Type of Casing Joints: Screw-Couple ☒ Glue-Couple ☐ Other _____
3. Type of Well Screen: PVC ☒ Galvanized ☐
   Stainless ☐ Teflon ☐ Other _____
4. Diameter of Casing and Well Screen:
   Casing 2 Inches, Screen 2 Inches.
5. Slot Size of Screen: 0.020
6. Type of Screen Perforation: Factory Slotted ☒
   Hacksaw ☐ Drilled ☐ Other _____
7. Installed Protector Pipe w/Lock: Yes ☒ No ☐

WELL DEVELOPMENT INFORMATION:

1. How was Well Developed ? Bailing ☐ Pumping ☒
   Air Surging (Air or Nitrogen) ☐ Other _____
2. Time Spent on Well Development ?
   _____ / _____ Minutes/Hours
3. Approximate Water Volume Removed ? _____ Gallons
4. Water Clarity Before Development ? Clear ☐
   Turbid ☐ Opaque ☐
5. Water Clarity After Development ? Clear ☐
   Turbid ☐ Opaque ☐
6. Did Water have Odor ? Yes ☐ No ☐
   If Yes, Describe _____
7. Did Water have any Color ? Yes ☐ No ☐
   If Yes , Describe _____

WATER LEVEL INFORMATION:

Water Level Summary (From Top of Casing)

During Drilling 20 Ft. Date 2-2-01
Before Development 19.47 Ft. Date 2-3-01
After Development _____ Ft. Date _____

Driller/Firm LAYNE Drill Rig Type AP-1000 Date Installed 2-2-01
Drill Crew Perry Well No. M-107 Kerr-McGee Hydrologist Ed Krish

SOIL BORING LOG KM-5655-B

KERR-McGEE CORPORATION Hydrology Dept. - S&EA Division	KM SUBSIDIARY KMC LLC	LOCATION Henderson, NV	BORING NUMBER M 108

DEPTH IN FEET	LITHOLOGIC DESCRIPTION	GRAPHIC LOG	UNIFIED SOIL FIELD CLASS.	BLOWS PER 6"	PID (ppm)	SOIL SAMPLE NO.	SOIL SAMPLE TYPE	SOIL SAMPLE DEPTH	SOIL SAMPLE REC.	REMARKS OR FIELD OBSERVATIONS
5	0-11 SAND, gravelly, brn (5YR5/4). 20% granules-pea gravel to ½", volc, SA-SR in vf-vc, SA sand w/ 10% silt in matrix. Com calcareous		SW							
11	11-19 GRAVEL, sdy, brn, volc pebbles to 4", SA-SR, w/30-40% vf-vc, SA sd. Calc.		GW							
19	19-24' Gravel, brn, volc, gran-pea grav. to ¾" w/10% vf-vc, SA sand, com calc		GP							
24	24-27 SAND, gravelly, gryoran (10YR7/4), vf-vc, SA-SR, sd w/ com caliche coatings - not cemented. 10-20% gran-pea grav to ½"		SW							
27										27-30 - V. hard well cemented
30	27-32 GRAVEL, gryoran (10YR7/4). Volc pebbles to 1-2" w/10% vf-vc sd. Var amts caliche cement.		GP							
32	27-30 Very hard, dense		ML							MC @ 32'
36	30-32 hard, nodular, vuggy									WTR @ 32'
	32'-36' SILT, brn (5YR5/4), sl. calcareous		ML							

EXPLANATION

- ▼ Water Table (24 Hour)
- ▽ Water Table (Time of Boring)
- PID Photoionization Detection (ppm)
- NO. Identifies Sample by Number
- TYPE Sample Collection Method
- SPLIT-BARREL
- AUGER
- ROCK CORE
- THIN-WALLED TUBE
- CONTINUOUS SAMPLER
- NO RECOVERY
- DEPTH Depth Top and Bottom of Sample
- REC. Actual Length of Recovered Sample in Feet

GRAPHIC LOG LEGEND

- CLAY
- SILT
- SAND
- GRAVEL
- SILTY CLAY
- CLAYEY SILT
- DEBRIS FILL
- HIGHLY ORGANIC (PEAT)
- SANDY CLAY
- CLAYEY SAND

DATE DRILLED	3/12-3/13/01
PAGE	1 of 3
DRILLING METHOD	PERCUSSION
DRILLED BY	LAYNE
LOGGED BY	Ed KRISH
EXISTING GRADE ELEVATION (FT. AMSL)	
LOCATION OR GRID COORDINATES	

SOIL BORING LOG KM-5655-B

KERR-McGEE CORPORATION Hydrology Dept. - S&EA Division	KM SUBSIDIARY KMC LLC	LOCATION HENDERSON, NV	BORING NUMBER M 108

DEPTH IN FEET	LITHOLOGIC DESCRIPTION	GRAPHIC LOG	UNIFIED SOIL FIELD CLASS.	BLOWS PER 6"	PID (ppm)	SOIL SAMPLE NO.	SOIL SAMPLE TYPE	SOIL SAMPLE DEPTH	SOIL SAMPLE REC.	REMARKS OR FIELD OBSERVATIONS
	36-44 SILT, sdy, brn w/25-30% vf, A sand. @39'-41' minor calc. nodules		ML							
44	44-49 SILT, brn, non-calcareous		ML							
49	49-62 SILT, sdy, brn w/20-30% vfg, A-SA sd. sl-non-calc		ML							
55										
60										
62	62-64 SAND, silty, brn, vfg, SA-SR w/20-30% silt non-calc									
64	64-78 SILT, sdy, brn, 20-30% vfg, SA, sd, sl-non-calc.		ML							
70										
75										
	78-87 SILT, cly, brn		ML							

EXPLANATION

- ▼ Water Table (24 Hour)
- ▽ Water Table (Time of Boring)
- PID Photoionization Detection (ppm)
- NO. Identifies Sample by Number
- TYPE Sample Collection Method
- SPLIT-BARREL
- AUGER
- ROCK CORE
- THIN-WALLED TUBE
- CONTINUOUS SAMPLER
- NO RECOVERY
- DEPTH Depth Top and Bottom of Sample
- REC. Actual Length of Recovered Sample in Feet

GRAPHIC LOG LEGEND

- CLAY
- SILT
- SAND
- GRAVEL
- SILTY CLAY
- CLAYEY SILT
- DEBRIS FILL
- HIGHLY ORGANIC (PEAT)
- SANDY CLAY
- CLAYEY SAND

DATE DRILLED	PAGE
3/12 - 3/13/01	2 of 3
DRILLING METHOD: PERCUSSION	
DRILLED BY: LAYNE	
LOGGED BY: ED KRISH	
EXISTING GRADE ELEVATION (FT. AMSL)	
LOCATION OR GRID COORDINATES	

SOIL BORING LOG KM-5655-B

KERR-McGEE CORPORATION Hydrology Dept. - S&EA Division	KM SUBSIDIARY KMCLLC	LOCATION HENDERSON, NV	BORING NUMBER M108

DEPTH IN FEET	LITHOLOGIC DESCRIPTION	GRAPHIC LOG	UNIFIED SOIL FIELD CLASS.	BLOWS PER 6"	PID (ppm)	SOIL SAMPLE NO.	SOIL SAMPLE TYPE	SOIL SAMPLE DEPTH	SOIL SAMPLE REC.	REMARKS OR FIELD OBSERVATIONS
85	sl to non-calcareous		ML							
87	TD 87									

EXPLANATION

- Water Table (24 Hour)
- Water Table (Time of Boring)
- PID Photoionization Detection (ppm)
- NO. Identifies Sample by Number
- TYPE Sample Collection Method
- SPLIT-BARREL
- AUGER
- ROCK CORE
- THIN-WALLED TUBE
- CONTINUOUS SAMPLER
- NO RECOVERY
- DEPTH Depth Top and Bottom of Sample
- REC. Actual Length of Recovered Sample in Feet

GRAPHIC LOG LEGEND

- CLAY
- SILT
- SAND
- GRAVEL
- SILTY CLAY
- CLAYEY SILT
- DEBRIS FILL
- HIGHLY ORGANIC (PEAT)
- SANDY CLAY
- CLAYEY SAND
- _____
- _____

DATE DRILLED: 3/12 - 3/13/01 | PAGE: 3 of 3

DRILLING METHOD: PERCUSSION

DRILLED BY: LAYNE

LOGGED BY: Ed Krish

EXISTING GRADE ELEVATION (FT. AMSL)

LOCATION OR GRID COORDINATES

KERR-McGEE CORPORATION
HYDROLOGY DEPARTMENT
MONITORING WELL INSTALLATION DIAGRAM

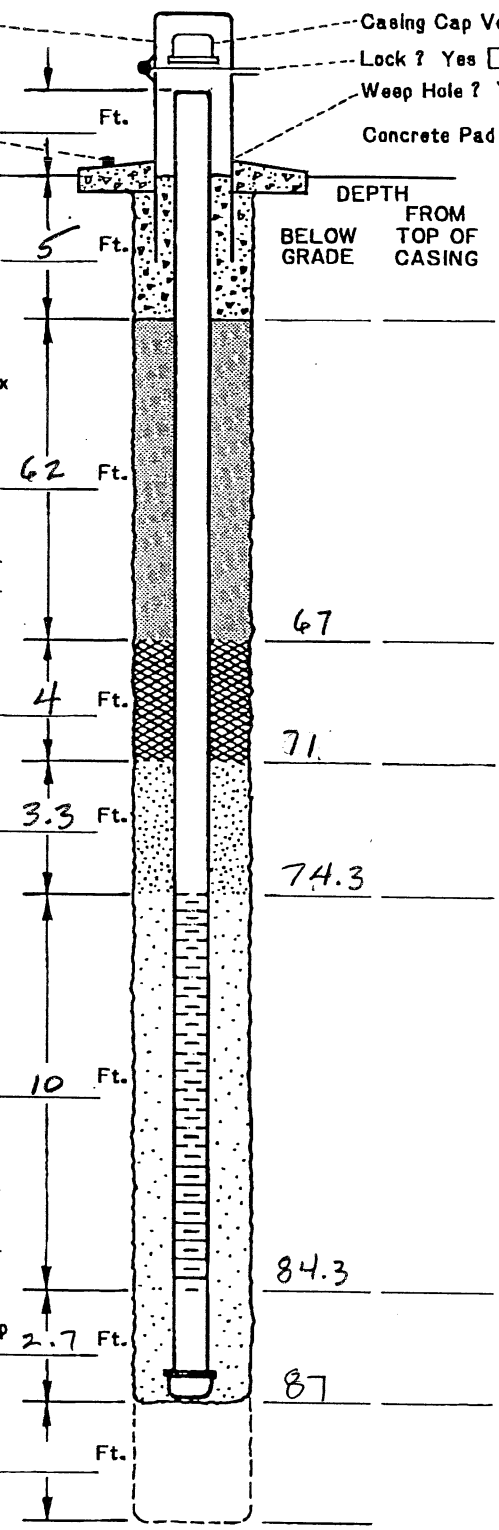

Protective Pipe — Yes ☒ No ☐ — Steel ☒ PVC ☐
Surveying Pin ? Yes ☐ No ☒
Casing Cap Vent ? Yes ☒ No ☐
Lock ? Yes ☐ No ☒
Weep Hole ? Yes ☐ No ☒
Concrete Pad _____ Ft. x _____ Ft. x _____ Inches

Concrete — 5 Ft.

Cement/Bentonite Grout Mix — Yes ☒ No ☐
5.5 Gallons Water to 94Lb. Bag Cement & 3-5 Lb. Bentonite Powder — 62 Ft.
Other: _____

Bentonite Seal — Pellets ☒ Slurry ☐ — 4 Ft.

Filter Pack Above Screen — 3.3 Ft.

FILTER PACK MATERIAL
Silica Sand ☒
Washed Sand ☐ — 10 Ft.
Pea Gravel ☐
Other: _____
Sand Size 10-20

Dense Phase Sampling Cup Bottom Plug — Yes ☒ No ☐ — 2.7 Ft.

Overdrilled Material Backfill — Ft.
Grout ☐ Sand ☒
Caved Material ☐
Other: _____

	DEPTH BELOW GRADE	DEPTH FROM TOP OF CASING
	67	
	71	
	74.3	
	84.3	
	87	

DRILLING INFORMATION:
1. Borehole Diameter= 9 Inches.
2. Were Drilling Additives Used ? Yes ☐ No ☒
   Revert ☐ Bentonite ☐ Water ☐
   Solid Auger ☐ Hollow Stem Auger ☐
3. Was Outer Steel Casing Used ? Yes ☐ No ☐
   Depth= _____ to _____ Feet.
4. Borehole Diameter for Outer Casing _____ Inches.

WELL CONSTRUCTION INFORMATION:
1. Type of Casing: PVC ☒ Galvanized ☐ Teflon ☐
   Stainless ☐ Other _____
2. Type of Casing Joints: Screw-Couple ☒ Glue-Couple ☐ Other _____
3. Type of Well Screen: PVC ☒ Galvanized ☐
   Stainless ☐ Teflon ☐ Other _____
4. Diameter of Casing and Well Screen:
   Casing 2 Inches, Screen 2 Inches.
5. Slot Size of Screen: 0.010
6. Type of Screen Perforation: Factory Slotted ☒
   Hacksaw ☐ Drilled ☐ Other _____
7. Installed Protector Pipe w/Lock: Yes ☐ No ☒

WELL DEVELOPMENT INFORMATION:
1. How was Well Developed ? Bailing ☐ Pumping ☒
   Air Surging (Air or Nitrogen) ☐ Other _____
2. Time Spent on Well Development ?
   _____/_____ Minutes/Hours
3. Approximate Water Volume Removed ? _____ Gallons
4. Water Clarity Before Development ? Clear ☐
   Turbid ☐ Opaque ☐
5. Water Clarity After Development ? Clear ☐
   Turbid ☐ Opaque ☐
6. Did Water have Odor ? Yes ☐ No ☐
   If Yes, Describe _____
7. Did Water have any Color ? Yes ☐ No ☐
   If Yes , Describe _____

WATER LEVEL INFORMATION:
Water Level Summary (From Top of Casing)
During Drilling 32 Ft. Date 3/12/01
Before Development _____ Ft. Date _____
After Development _____ Ft. Date _____

Driller/Firm LAYNE — Drill Rig Type AP-1000 — Date Installed 3-13-01
Drill Crew HORMAN — Well No. M-108 — Kerr-McGee Hydrologist ED KRISH

33 2.7

SOIL BORING LOG KM-5655-B

KERR-McGEE CORPORATION Hydrology Dept. - S&EA Division	KM SUBSIDIARY KMCLLC	LOCATION HENDERSON, NV	BORING NUMBER M109

DEPTH IN FEET	LITHOLOGIC DESCRIPTION	GRAPHIC LOG	UNIFIED SOIL FIELD CLASS.	BLOWS PER 6"	PID (ppm)	SOIL SAMPLE NO.	SOIL SAMPLE TYPE	SOIL SAMPLE DEPTH	SOIL SAMPLE REC.	REMARKS OR FIELD OBSERVATIONS
5	0-17 SAND, gravelly, mod yell brn (10YR 5/4). m-vc, SA-SR w/ minor vf-fg sd. 10-20% gran - pea grav, rnlc, A-SR up to 1/2", locally to 2". Mod calc., 10% silt		SW							
	3-4' gravel to 2"									
10	8-9' " "									
	12-13 " "									
	10-15 com wht caliche coatings on grains, not hard									
	15-17 semi hard calichified gravels to 2"									
17	17-23 SAND, gry oran (10YR 6/4). vf-fg, SA, calcareous, 10% silt		SP							
	22-23 sl. hard calichified sand									
23	23-30 SAND, silty, v. pale orange to 29' (10YR 8/2) then gry oran (10YR 7/4) to 30' vf-fg, SA-SR w/ local com c-vc + sm granules. Very calcareous - com. sm caliche nodules - soft. 30-40% silt		SM							damp @ 29
30										
32	29-30 10-20% A-SR c-vcg + granules		ML							MC @ 30' WTR @ 30'
	30-32 SILT, sdy, brn non-calcareous		ML							
38	32-38 SILT, brn w/ minor sm gyp xtals		ML							

EXPLANATION

- ▼ Water Table (24 Hour)
- ▽ Water Table (Time of Boring)
- PID Photoionization Detection (ppm)
- NO. Identifies Sample by Number
- TYPE Sample Collection Method
- SPLIT-BARREL
- AUGER
- ROCK CORE
- THIN-WALLED TUBE
- CONTINUOUS SAMPLER
- NO RECOVERY
- DEPTH Depth Top and Bottom of Sample
- REC. Actual Length of Recovered Sample in Feet

GRAPHIC LOG LEGEND

- CLAY
- SILT
- SAND
- GRAVEL
- SILTY CLAY
- CLAYEY SILT
- DEBRIS FILL
- HIGHLY ORGANIC (PEAT)
- SANDY CLAY
- CLAYEY SAND

DATE DRILLED	PAGE
3/13 - 3/14/01	1 of 3
DRILLING METHOD: PERCUSSION	
DRILLED BY: LAYNE	
LOGGED BY: Ed KRISH	
EXISTING GRADE ELEVATION (FT. AMSL)	
LOCATION OR GRID COORDINATES	

SOIL BORING LOG KM-5655-B

KERR-McGEE CORPORATION Hydrology Dept. - S&EA Division	KM SUBSIDIARY KMC LLC	LOCATION HENDERSON, NV	BORING NUMBER M 109

DEPTH IN FEET	LITHOLOGIC DESCRIPTION	GRAPHIC LOG	UNIFIED SOIL FIELD CLASS.	BLOWS PER 6"	PID (ppm)	SOIL SAMPLE NO.	SOIL SAMPLE TYPE	SOIL SAMPLE DEPTH	SOIL SAMPLE REC.	REMARKS OR FIELD OBSERVATIONS
	38-54 SILT, sdy, brn 20-40% vfg, A-SA sand. non-sl calcareous									
45	44-45 com caliche nodules to 3"		ML							
	45-56 non-calcareous									
50										
56	56-58 SAND, silty, brn vfg, SA w/ 20-30% SILT com-calcareous		SM							
58	58-72 SILT, brn, sl- non-calcareous to 65'									
	59-61' sl sdy (10%)									
65	65-70 v. pale orange, (10YR 8/2) com-abu calcareous coatings w/ caliche nodules to 1/2"		ML							
72	72-85 SILT, sdy, brn w/ 20-40% vfg sd, sl-non calcareous		ML							

EXPLANATION

- ▼ Water Table (24 Hour)
- ▽ Water Table (Time of Boring)
- PID Photoionization Detection (ppm)
- NO. Identifies Sample by Number
- TYPE Sample Collection Method
  - SPLIT-BARREL
  - AUGER
  - ROCK CORE
  - THIN-WALLED TUBE
  - CONTINUOUS SAMPLER
  - NO RECOVERY
- DEPTH Depth Top and Bottom of Sample
- REC. Actual Length of Recovered Sample in Feet

GRAPHIC LOG LEGEND

- CLAY
- SILT
- SAND
- GRAVEL
- SILTY CLAY
- CLAYEY SILT
- DEBRIS FILL
- HIGHLY ORGANIC (PEAT)
- SANDY CLAY
- CLAYEY SAND

DATE DRILLED	PAGE
3/13 - 3/14/01	2 of 3
DRILLING METHOD: PERCUSSION	
DRILLED BY: LAYNE	
LOGGED BY: Ed KRISH	
EXISTING GRADE ELEVATION (FT. AMSL)	
LOCATION OR GRID COORDINATES	

SOIL BORING LOG KM-5655-B

KERR-McGEE CORPORATION Hydrology Dept. - S&EA Division	KM SUBSIDIARY KMC LLC	LOCATION HENDERSON NV	BORING NUMBER M109

DEPTH IN FEET	LITHOLOGIC DESCRIPTION	GRAPHIC LOG	UNIFIED SOIL FIELD CLASS.	BLOWS PER 6"	PID (ppm)	SOIL SAMPLE NO.	SOIL SAMPLE TYPE	SOIL SAMPLE DEPTH	SOIL SAMPLE REC.	REMARKS OR FIELD OBSERVATIONS
85			ML							
	85-86 SILT, brn non calcareous		ML							
87			ML							
	86-87TD SILT, sdy 20-30% vfg sd w/caliche nodules to 1"									
	TD 87'									

EXPLANATION

- ▼ Water Table (24 Hour)
- ▽ Water Table (Time of Boring)
- PID Photoionization Detection (ppm)
- NO. Identifies Sample by Number
- TYPE Sample Collection Method
- SPLIT-BARREL
- AUGER
- ROCK CORE
- THIN-WALLED TUBE
- CONTINUOUS SAMPLER
- NO RECOVERY
- DEPTH Depth Top and Bottom of Sample
- REC. Actual Length of Recovered Sample in Feet

GRAPHIC LOG LEGEND

- CLAY
- SILT
- SAND
- GRAVEL
- SILTY CLAY
- CLAYEY SILT
- DEBRIS FILL
- HIGHLY ORGANIC (PEAT)
- SANDY CLAY
- CLAYEY SAND

DATE DRILLED: 3/13-3/14/01 | PAGE: 3 of 3

DRILLING METHOD: PERCUSSION

DRILLED BY: LAYNE

LOGGED BY: Ed KRISH

EXISTING GRADE ELEVATION (FT. AMSL)

LOCATION OR GRID COORDINATES

KERR-McGEE CORPORATION
HYDROLOGY DEPARTMENT
MONITORING WELL INSTALLATION DIAGRAM

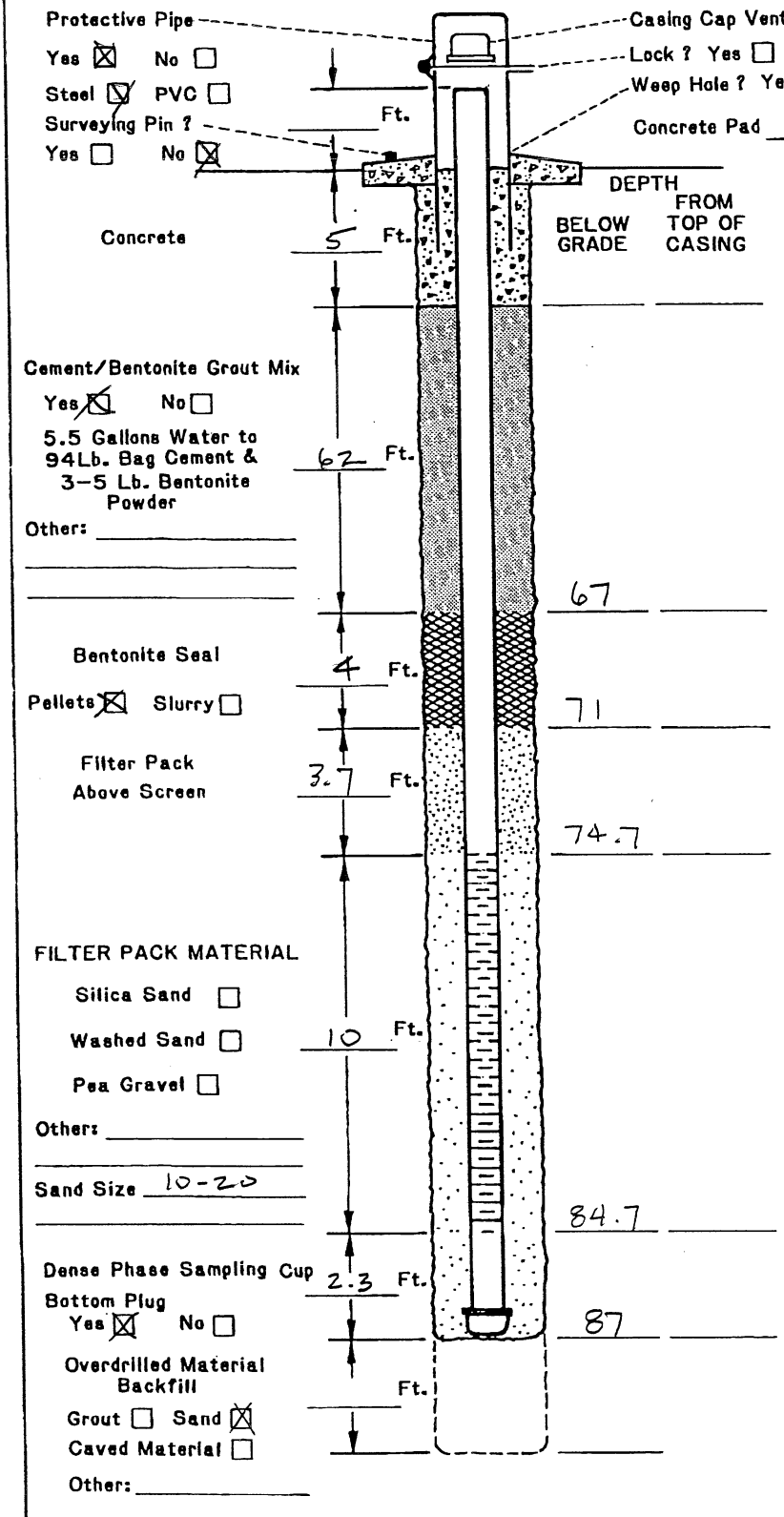

DRILLING INFORMATION:

1. Borehole Diameter= 9 Inches.
2. Were Drilling Additives Used ? Yes ☐ No ☐
   Revert ☐ Bentonite ☐ Water ☐
   Solid Auger ☐ Hollow Stem Auger ☐
3. Was Outer Steel Casing Used ? Yes ☐ No ☐
   Depth= _____ to _____ Feet.
4. Borehole Diameter for Outer Casing _____ Inches.

WELL CONSTRUCTION INFORMATION:

1. Type of Casing: PVC ☒ Galvanized ☐ Teflon ☐
   Stainless ☐ Other _____
2. Type of Casing Joints: Screw-Couple ☒ Glue-Couple ☐ Other _____
3. Type of Well Screen: PVC ☒ Galvanized ☐
   Stainless ☐ Teflon ☐ Other _____
4. Diameter of Casing and Well Screen:
   Casing 2 Inches, Screen 2 Inches.
5. Slot Size of Screen: 0.010
6. Type of Screen Perforation: Factory Slotted ☒
   Hacksaw ☐ Drilled ☐ Other _____
7. Installed Protector Pipe w/Lock: Yes ☐ No ☒

WELL DEVELOPMENT INFORMATION:

1. How was Well Developed ? Bailing ☐ Pumping ☒
   Air Surging (Air or Nitrogen) ☐ Other _____
2. Time Spent on Well Development ?
   _____ / _____ Minutes/Hours
3. Approximate Water Volume Removed ? _____ Gallons
4. Water Clarity Before Development ? Clear ☐
   Turbid ☐ Opaque ☐
5. Water Clarity After Development ? Clear ☐
   Turbid ☐ Opaque ☐
6. Did Water have Odor ? Yes ☐ No ☐
   If Yes, Describe _____
7. Did Water have any Color ? Yes ☐ No ☐
   If Yes , Describe _____

WATER LEVEL INFORMATION:

Water Level Summary (From Top of Casing)

During Drilling 30 Ft. Date 3-13-01
Before Development _____ Ft. Date _____
After Development _____ Ft. Date _____

Driller/Firm LAYNE Drill Rig Type AP-1000 Date Installed 3-14-01
Drill Crew HORMAN Well # M109 Kerr-McGee Hydrologist ED KRISH

SOIL BORING LOG KM—5655-A

KERR-McGEE CORPORATION Hydrology Dept. Engineering Services	KM SUBSIDIARY KMCLLC	LOCATION HENDERSON	BORING NUMBER M-110

DEPTH IN FEET	LITHOLOGIC DESCRIPTION	GRAPHIC LOG	UNIFIED SOIL FIELD CLASS.	BLOWS PER FOOT	PID (ppm)	SOIL SAMPLE NO.	SOIL SAMPLE TYPE	SOIL SAMPLE DEPTH	SOIL SAMPLE REC.	REMARKS OR FIELD OBSERVATIONS
5	ALLUVIUM: SILTY SAND W/ GRAVEL WELL-GRADED; DRY TO SLI. MOIST		SW							
10										
15										
20			SW							
25										
30	MINOR CALICHE									
31	HARD DRILLING; SAND AND GRAVEL CALICHE		▽							
34										
35	CLAYEY SILT - MUDDY CREEK		ML-CL							
40	TD 40'									

EXPLANATION

- ▼ Water Table (24 Hour)
- ▽ Water Table (Time of Boring)
- PID Photoionization Detection (ppm)
- NO. Identifies Sample by Number
- TYPE Sample Collection Method

SPLIT-BARREL; AUGER; ROCK CORE; THIN-WALLED TUBE; CONTINUOUS SAMPLER; NO RECOVERY

DEPTH Depth Top and Bottom of Sample
REC. Actual Length of Recovered Sample in Feet

GRAPHIC LOG LEGEND

CLAY; SILT; SAND; GRAVEL; SILTY CLAY; CLAYEY SILT; DEBRIS FILL; HIGHLY ORGANIC (PEAT); SANDY CLAY; CLAYEY SAND; _____; _____

DATE DRILLED	10/9/01
PAGE	1 of 1
DRILLING METHOD	HSA
DRILLED BY	KLEINFELDER
LOGGED BY	M. PORTERFIELD
EXISTING GRADE ELEVATION (FT. AMSL)	
LOCATION OR GRID COORDINATES	

KERR-McGEE CORPORATION
HYDROLOGY DEPARTMENT
MONITORING WELL INSTALLATION DIAGRAM

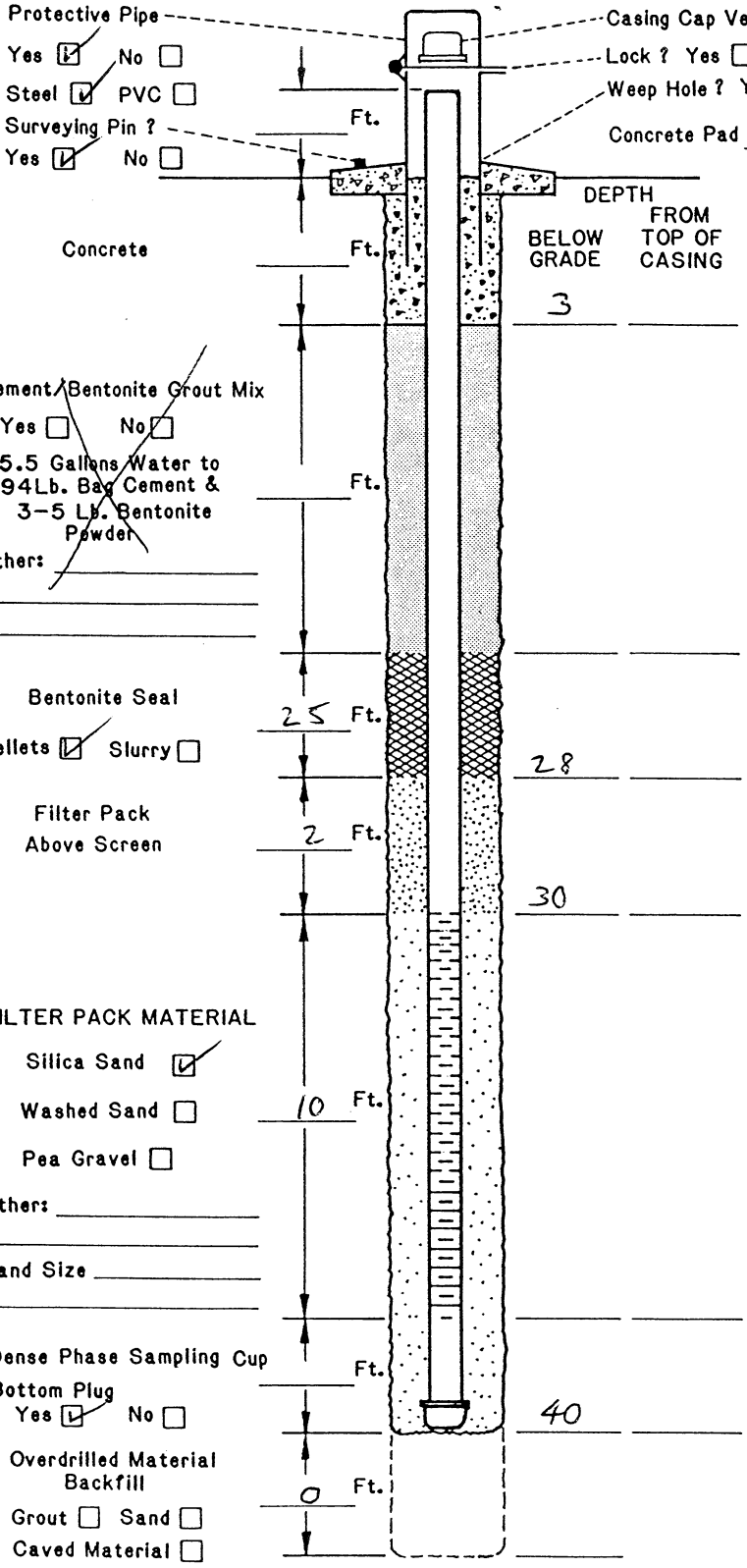

DRILLING INFORMATION:

1. Borehole Diameter= 8 Inches.
2. Were Drilling Additives Used ? Yes ☐ No ☑
   Revert ☐ Bentonite ☐ Water ☐
   Solid Auger ☐ Hollow Stem Auger ☑
3. Was Outer Steel Casing Used ? Yes ☐ No ☑
   Depth= _____ to _____ Feet.
4. Borehole Diameter for Outer Casing _____ Inches.

WELL CONSTRUCTION INFORMATION:

1. Type of Casing: PVC ☑ Galvanized ☐ Teflon ☐
   Stainless ☐ Other _____
2. Type of Casing Joints: Screw-Couple ☑ Glue-Couple ☐ Other _____
3. Type of Well Screen: PVC ☑ Galvanized ☐
   Stainless ☐ Teflon ☐ Other _____
4. Diameter of Casing and Well Screen:
   Casing 2 Inches, Screen 2 Inches.
5. Slot Size of Screen: 0.010
6. Type of Screen Perforation: Factory Slotted ☑
   Hacksaw ☐ Drilled ☐ Other _____
7. Installed Protector Pipe w/Lock: Yes ☑ No ☐

WELL DEVELOPMENT INFORMATION:

1. How was Well Developed ? Bailing ☐ Pumping ☐
   Air Surging (Air or Nitrogen) ☐ Other _____
2. Time Spent on Well Development ?
   _____ / _____ Minutes/Hours
3. Approximate Water Volume Removed ? _____ Gallons
4. Water Clarity Before Development ? Clear ☐
   Turbid ☐ Opaque ☐
5. Water Clarity After Development ? Clear ☐
   Turbid ☐ Opaque ☐
6. Did Water have Odor ? Yes ☐ No ☐
   If Yes, Describe _____
7. Did Water have any Color ? Yes ☐ No ☐
   If Yes , Describe _____

WATER LEVEL INFORMATION:

Water Level Summary (From Top of Casing)

During Drilling 33 Ft. Date 10/9/01

Before Development _____ Ft. Date _____

After Development _____ Ft. Date _____

Driller/Firm SHEM / KLEINFELDER Drill Rig Type MOBILE B-60 Date Installed 10/9/01

Drill Crew SHEM / KENT Well No. M-110 Kerr-McGee Hydrologist M. PORTERFIELD

SOIL BORING LOG KM—5655-A

KERR-McGEE CORPORATION Hydrology Dept. Engineering Services	KM SUBSIDIARY KmLLC	LOCATION HENDERSON	BORING NUMBER M-111

DEPTH IN FEET	LITHOLOGIC DESCRIPTION	GRAPHIC LOG	UNIFIED SOIL FIELD CLASS.	BLOWS PER FOOT	PID (ppm)	SOIL SAMPLE NO.	SOIL SAMPLE TYPE	SOIL SAMPLE DEPTH	SOIL SAMPLE REC.	REMARKS OR FIELD OBSERVATIONS
0	ALLUVIUM: SILTY SAND WITH GRAVEL		SW							
20	INCREASING GRAVEL CONTENT		SW							
25	AS ABOVE; INCREASED GRAVEL CONTENT; HARD DRILLING - CALICHE?		SW-GW							
32.5	CLAYEY SILT: MUDDY CREEK		ML-CL							
40										

EXPLANATION

- ▼ Water Table (24 Hour)
- ▽ Water Table (Time of Boring)
- PID Photoionization Detection (ppm)
- NO. Identifies Sample by Number
- TYPE Sample Collection Method

SPLIT-BARREL; AUGER; ROCK CORE; THIN-WALLED TUBE; CONTINUOUS SAMPLER; NO RECOVERY

- DEPTH Depth Top and Bottom of Sample
- REC. Actual Length of Recovered Sample in Feet

GRAPHIC LOG LEGEND

CLAY; SILT; SAND; GRAVEL; SILTY CLAY; CLAYEY SILT; DEBRIS FILL; HIGHLY ORGANIC (PEAT); SANDY CLAY; CLAYEY SAND; _____; _____

DATE DRILLED	PAGE
10/9/01	1 of 1

DRILLING METHOD: HSA

DRILLED BY: KLEINFELDER

LOGGED BY: M. PORTERFIELD

EXISTING GRADE ELEVATION (FT. AMSL)

LOCATION OR GRID COORDINATES

FLUSH MOUNT

KERR-McGEE CORPORATION
HYDROLOGY DEPARTMENT
MONITORING WELL INSTALLATION DIAGRAM

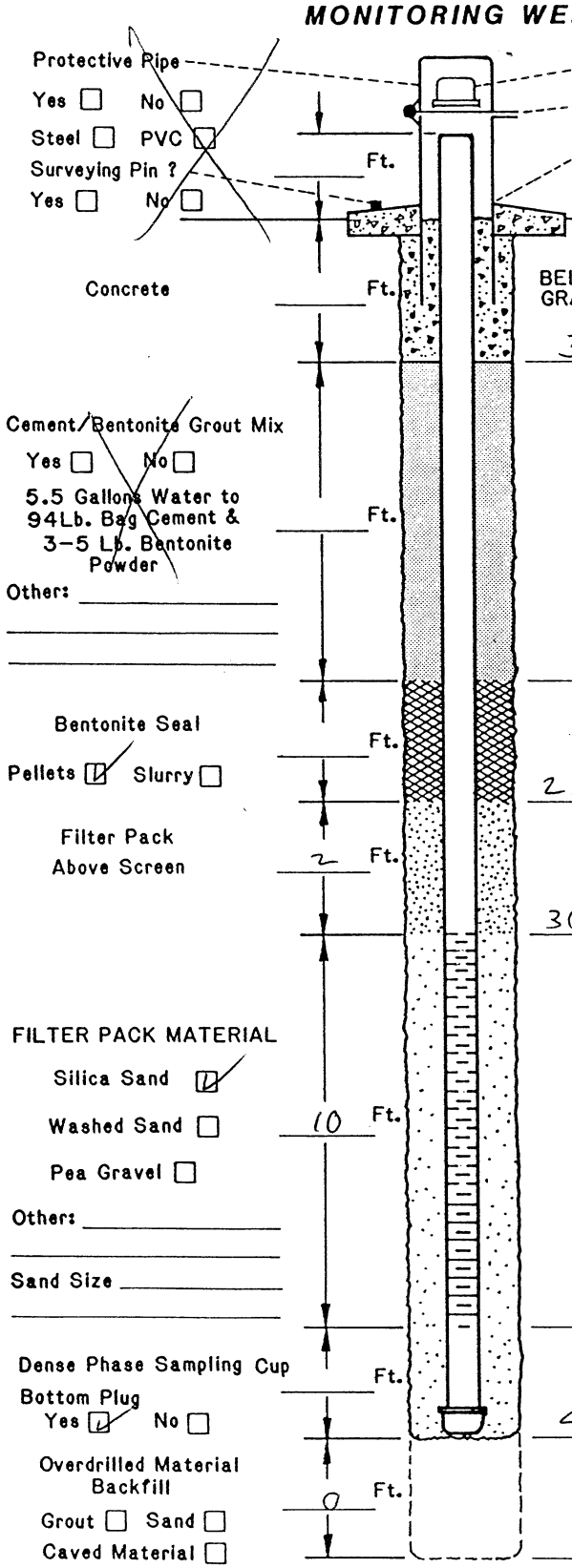

DRILLING INFORMATION:

1. Borehole Diameter= 8 Inches.
2. Were Drilling Additives Used ? Yes ☐ No ☑
   Revert ☐ Bentonite ☐ Water ☐
   Solid Auger ☐ Hollow Stem Auger ☑
3. Was Outer Steel Casing Used ? Yes ☐ No ☑
   Depth= ____ to ____ Feet.
4. Borehole Diameter for Outer Casing ____ Inches.

WELL CONSTRUCTION INFORMATION:

1. Type of Casing: PVC ☑ Galvanized ☐ Teflon ☐
   Stainless ☐ Other ____
2. Type of Casing Joints: Screw-Couple ☑ Glue-Couple ☐ Other ____
3. Type of Well Screen: PVC ☑ Galvanized ☐
   Stainless ☐ Teflon ☐ Other ____
4. Diameter of Casing and Well Screen:
   Casing 2 Inches, Screen 2 Inches.
5. Slot Size of Screen: 0.010
6. Type of Screen Perforation: Factory Slotted ☑
   Hacksaw ☐ Drilled ☐ Other ____
7. Installed Protector Pipe w/Lock: Yes ☐ No ☑

WELL DEVELOPMENT INFORMATION:

1. How was Well Developed ? Bailing ☐ Pumping ☐
   Air Surging (Air or Nitrogen) ☐ Other ____
2. Time Spent on Well Development ?
   ____ / ____ Minutes/Hours
3. Approximate Water Volume Removed ? ____ Gallons
4. Water Clarity Before Development ? Clear ☐
   Turbid ☐ Opaque ☐
5. Water Clarity After Development ? Clear ☐
   Turbid ☐ Opaque ☐
6. Did Water have Odor ? Yes ☐ No ☐
   If Yes, Describe ____
7. Did Water have any Color ? Yes ☐ No ☐
   If Yes , Describe ____

WATER LEVEL INFORMATION:

Water Level Summary (From Top of Casing)

During Drilling 33.5 Ft. Date 10/9/01

Before Development ____ Ft. Date ____

After Development ____ Ft. Date ____

Driller/Firm SHEM / KLEINFELDER Drill Rig Type MOBILE B-61 Date Installed 10/9/01

Drill Crew SHEM / KENT Well No. M-111 Kerr-McGee Hydrologist M. PORTERFIELD

SOIL BORING LOG KM—5655-A

KERR-McGEE CORPORATION Hydrology Dept. Engineering Services	KM SUBSIDIARY KMCLLC	LOCATION HENDERSON	BORING NUMBER M-112

DEPTH IN FEET	LITHOLOGIC DESCRIPTION	GRAPHIC LOG	UNIFIED SOIL FIELD CLASS.	BLOWS PER FOOT	PID (ppm)	SOIL SAMPLE NO.	SOIL SAMPLE TYPE	SOIL SAMPLE DEPTH	SOIL SAMPLE REC.	REMARKS OR FIELD OBSERVATIONS
0	SILTY SAND W/ GRAVEL; LT. ORANGE-BROWN; DRY		SM							
3	SANDY GRAVEL; ORANGE-BROWN; F-C GRAINED; DRY		GM							
5										
6	SAND W/ GRAVEL; SILT COMMON; RED-BROWN; DRY		SM							
10										
15										
18	SANDY GRAVEL; RED-BROWN; F-C GRAINED; DRY		GM							
20										
23.5										
24.5	SAND W/ GRAVEL; RED-BROWN; DRY		SM							
25	SANDY GRAVEL; RED-BROWN; DRY TO SLI. MOIST		GM							
30										
31.5	SAND W/ GRAVEL; RED-BROWN VF-C GRAINED; SILT COMMON SLI. MOIST		SM							
35										
40										

EXPLANATION

- ▼ Water Table (24 Hour)
- ▽ Water Table (Time of Boring)
- PID Photoionization Detection (ppm)
- NO. Identifies Sample by Number
- TYPE Sample Collection Method

SPLIT-BARREL; AUGER; ROCK CORE; THIN-WALLED TUBE; CONTINUOUS SAMPLER; NO RECOVERY

- DEPTH Depth Top and Bottom of Sample
- REC. Actual Length of Recovered Sample in Feet

GRAPHIC LOG LEGEND

CLAY; SILT; SAND; GRAVEL; SILTY CLAY; CLAYEY SILT; DEBRIS FILL; HIGHLY ORGANIC (PEAT); SANDY CLAY; CLAYEY SAND; _____; _____

DATE DRILLED	PAGE
7/8/02	1 of 2

DRILLING METHOD: HOLLOW STEM AUGER

DRILLED BY: KLEINFELDER, INC.

LOGGED BY: T. REED

EXISTING GRADE ELEVATION (FT. AMSL):

LOCATION OR GRID COORDINATES:

SOIL BORING LOG KM—5655-A

KERR-McGEE CORPORATION Hydrology Dept. Engineering Services	KM SUBSIDIARY KMCLLC	LOCATION HENDERSON	BORING NUMBER M-112

DEPTH IN FEET	LITHOLOGIC DESCRIPTION	GRAPHIC LOG	UNIFIED SOIL FIELD CLASS.	BLOWS PER FOOT	PID (ppm)	SOIL SAMPLE NO.	SOIL SAMPLE TYPE	SOIL SAMPLE DEPTH	SOIL SAMPLE REC.	REMARKS OR FIELD OBSERVATIONS
40	SAND AS ABOVE; BECOMING MOIST		SM							
42.5	SILT / SANDY SILT W/ CLAY; BROWN; MOIST TO SATURATED [MUDDY CREEK]		ML							
45										
50	TO 50'									

EXPLANATION

- ▼ Water Table (24 Hour)
- ▽ Water Table (Time of Boring)
- PID Photoionization Detection (ppm)
- NO. Identifies Sample by Number
- TYPE Sample Collection Method
- SPLIT-BARREL
- AUGER
- ROCK CORE
- THIN-WALLED TUBE
- CONTINUOUS SAMPLER
- NO RECOVERY
- DEPTH Depth Top and Bottom of Sample
- REC. Actual Length of Recovered Sample in Feet

GRAPHIC LOG LEGEND

- CLAY
- SILT
- SAND
- GRAVEL
- SILTY CLAY
- CLAYEY SILT
- DEBRIS FILL
- HIGHLY ORGANIC (PEAT)
- SANDY CLAY
- CLAYEY SAND
- _____
- _____

DATE DRILLED	PAGE
7/8/02	2 of 2

DRILLING METHOD: Hollow Stem Auger

DRILLED BY: Kleinfelder, Inc.

LOGGED BY: T. Reed

EXISTING GRADE ELEVATION (FT. AMSL):

LOCATION OR GRID COORDINATES:

KERR-McGEE CORPORATION
HYDROLOGY DEPARTMENT
MONITORING WELL INSTALLATION DIAGRAM

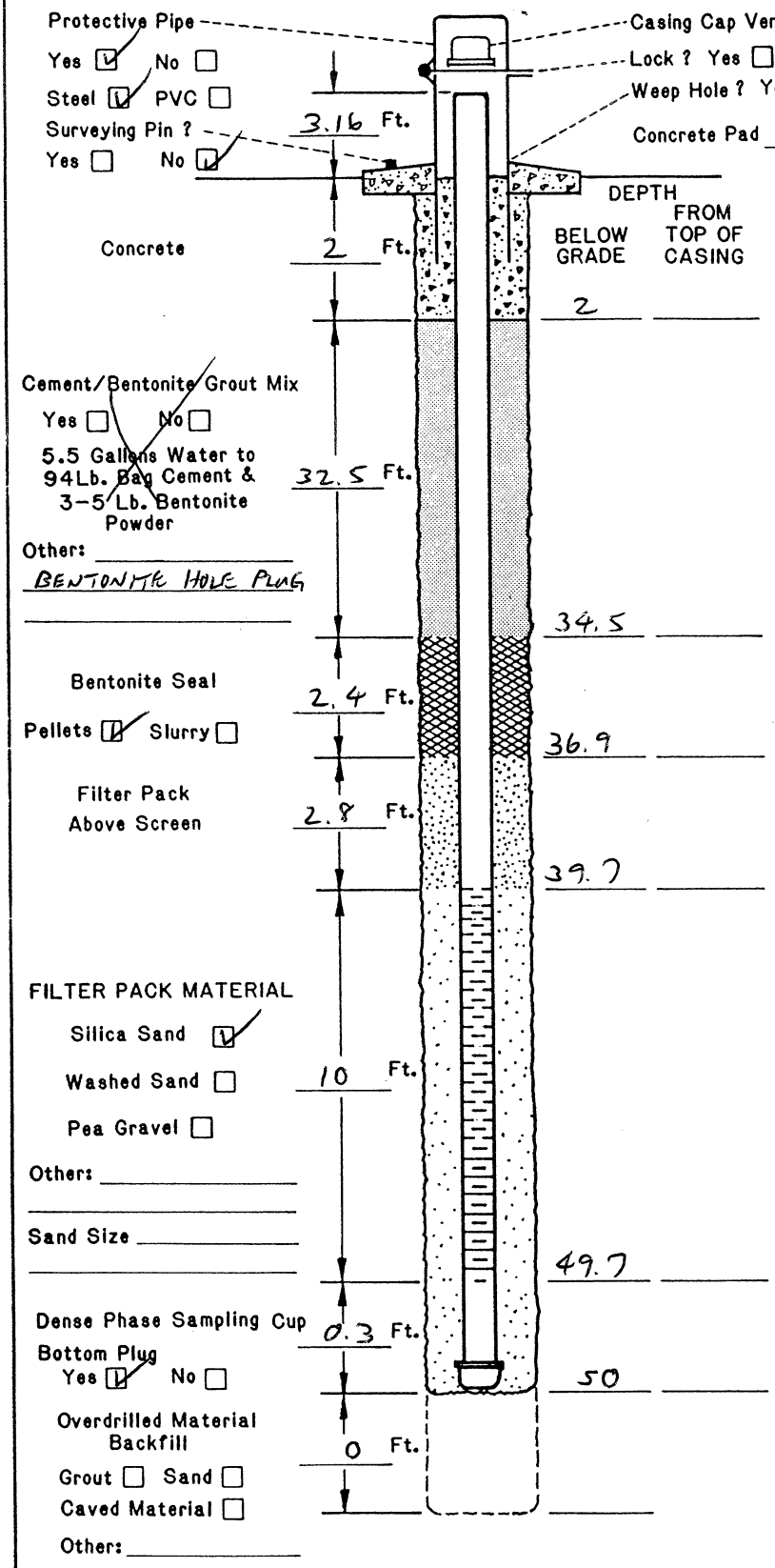

DRILLING INFORMATION:

1. Borehole Diameter= 8 Inches.
2. Were Drilling Additives Used ? Yes ☐ No ☑
   Revert ☐ Bentonite ☐ Water ☐
   Solid Auger ☐ Hollow Stem Auger ☑
3. Was Outer Steel Casing Used ? Yes ☐ No ☑
   Depth= _____ to _____ Feet.
4. Borehole Diameter for Outer Casing _____ Inches.

WELL CONSTRUCTION INFORMATION:

1. Type of Casing: PVC ☑ Galvanized ☐ Teflon ☐
   Stainless ☐ Other _____
2. Type of Casing Joints: Screw-Couple ☑ Glue-Couple ☐ Other _____
3. Type of Well Screen: PVC ☑ Galvanized ☐
   Stainless ☐ Teflon ☐ Other _____
4. Diameter of Casing and Well Screen:
   Casing 2 Inches, Screen 2 Inches.
5. Slot Size of Screen: 0.010 "
6. Type of Screen Perforation: Factory Slotted ☑
   Hacksaw ☐ Drilled ☐ Other _____
7. Installed Protector Pipe w/Lock: Yes ☑ No ☐

WELL DEVELOPMENT INFORMATION:

1. How was Well Developed ? Bailing ☐ Pumping ☑
   Air Surging (Air or Nitrogen) ☐ Other _____
2. Time Spent on Well Development ?
   15 / 1 Minutes/Hours
3. Approximate Water Volume Removed ? 15 Gallons
4. Water Clarity Before Development ? Clear ☐
   Turbid ☐ Opaque ☑
5. Water Clarity After Development ? Clear ☐
   Turbid ☑ Opaque ☐
6. Did Water have Oder ? Yes ☐ No ☑
   If Yes, Describe _____
7. Did Water have any Color ? Yes ☑ No ☐
   If Yes , Describe YELLOW

WATER LEVEL INFORMATION:

Water Level Summary (From Top of Casing)

During Drilling 43.5 Ft. Date 7/8/02

Before Development 45.32 Ft. Date 7/10/02

After Development _____ Ft. Date _____

Driller/Firm S. GARRETT / KLEINFELDER Drill Rig Type MOBILE B-61 Date Installed 7/8/02

Drill Crew S. GARRETT / K. GROOVER Well No. M-112 Kerr-McGee Hydrologist T. REED

SOIL BORING LOG KM—5655-A

KERR-McGEE CORPORATION Hydrology Dept. Engineering Services	KM SUBSIDIARY KMCLLC	LOCATION HENDERSON	BORING NUMBER M-113

DEPTH IN FEET	LITHOLOGIC DESCRIPTION	GRAPHIC LOG	UNIFIED SOIL FIELD CLASS.	BLOWS PER FOOT	PID (ppm)	SOIL SAMPLE NO.	SOIL SAMPLE TYPE	SOIL SAMPLE DEPTH	SOIL SAMPLE REC.	REMARKS OR FIELD OBSERVATIONS
0	SAND; REDDISH-BROWN; F-COARSE GRAINED; DRY; ASPHALT IN TOP 6"		SW							
3										
5	SANDY GRAVEL; MED-BROWN; DRY		GM							
10										
12										
15	SAND W/GRAVEL; F-COARSE GRAINED; MED. BROWN; DRY; SOME SILT COMMON		SM							
20										
25	SAND; FINE-MED-GRAINED; NO GRAVEL; TAN; SLI. MOIST		SW							
30										
35	SAND AS ABOVE; BECOMING MOIST TO SATURATED									
40										

EXPLANATION

- ▼ Water Table (24 Hour)
- ▽ Water Table (Time of Boring)
- PID Photoionization Detection (ppm)
- NO. Identifies Sample by Number
- TYPE Sample Collection Method

SPLIT-BARREL | AUGER | ROCK CORE | THIN-WALLED TUBE | CONTINUOUS SAMPLER | NO RECOVERY

DEPTH Depth Top and Bottom of Sample
REC. Actual Length of Recovered Sample in Feet

GRAPHIC LOG LEGEND

CLAY | SILT | SAND | GRAVEL | SILTY CLAY | CLAYEY SILT | DEBRIS FILL | HIGHLY ORGANIC (PEAT) | SANDY CLAY | CLAYEY SAND | _____ | _____

DATE DRILLED: 7/9/02
PAGE: 1 of 2
DRILLING METHOD: HOLLOW STEM AUGER
DRILLED BY: KLEINFELDER, INC.
LOGGED BY: T. REED
EXISTING GRADE ELEVATION (FT. AMSL)
LOCATION OR GRID COORDINATES

SOIL BORING LOG KM—5655-A

KERR-McGEE CORPORATION Hydrology Dept. Engineering Services	KM SUBSIDIARY KMCLLC	LOCATION HENDERSON	BORING NUMBER M-113

DEPTH IN FEET	LITHOLOGIC DESCRIPTION	GRAPHIC LOG	UNIFIED SOIL FIELD CLASS.	BLOWS PER FOOT	PID (ppm)	SOIL SAMPLE NO.	SOIL SAMPLE TYPE	SOIL SAMPLE DEPTH	SOIL SAMPLE REC.	REMARKS OR FIELD OBSERVATIONS
40	SAND AS ABOVE; SATURATED		SW							
44										
45	SILT / SANDY SILT W/ CLAY; GRAY-BROWN; SATURATED; [MUDDY CREEK]		ML							
50										
	TO 50'									

EXPLANATION

- ▼ Water Table (24 Hour)
- ▽ Water Table (Time of Boring)
- PID Photoionization Detection (ppm)
- NO. Identifies Sample by Number
- TYPE Sample Collection Method

SPLIT-BARREL; AUGER; ROCK CORE; THIN-WALLED TUBE; CONTINUOUS SAMPLER; NO RECOVERY

DEPTH Depth Top and Bottom of Sample
REC. Actual Length of Recovered Sample in Feet

GRAPHIC LOG LEGEND

CLAY; SILT; SAND; GRAVEL; SILTY CLAY; CLAYEY SILT; DEBRIS FILL; HIGHLY ORGANIC (PEAT); SANDY CLAY; CLAYEY SAND; _____; _____

DATE DRILLED: 7/9/02
PAGE: 2 of 2
DRILLING METHOD: HOLLOW STEM AUGER
DRILLED BY: KLEINFELDER, INC.
LOGGED BY: T. REED
EXISTING GRADE ELEVATION (FT. AMSL)
LOCATION OR GRID COORDINATES

FLUSHMOUNT

KERR-McGEE CORPORATION
HYDROLOGY DEPARTMENT
MONITORING WELL INSTALLATION DIAGRAM

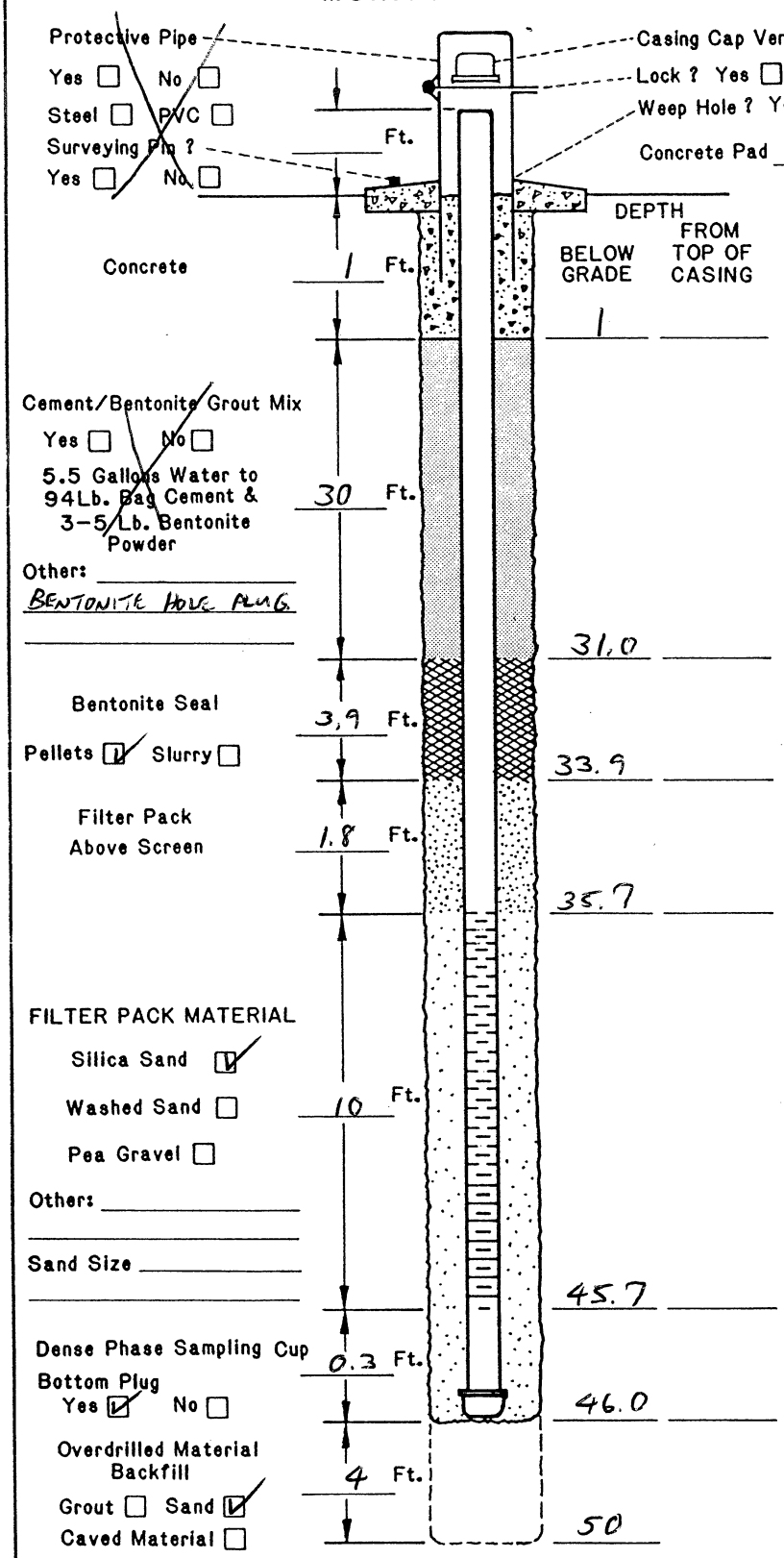

DRILLING INFORMATION:

1. Borehole Diameter= 8 Inches.
2. Were Drilling Additives Used ? Yes ☐ No ☑
   Revert ☐ Bentonite ☐ Water ☐
   Solid Auger ☐ Hollow Stem Auger ☑
3. Was Outer Steel Casing Used ? Yes ☐ No ☐
   Depth= _____ to _____ Feet.
4. Borehole Diameter for Outer Casing _____ Inches.

WELL CONSTRUCTION INFORMATION:

1. Type of Casing: PVC ☑ Galvanized ☐ Teflon ☐
   Stainless ☐ Other _____
2. Type of Casing Joints: Screw-Couple ☑ Glue-Couple ☐ Other _____
3. Type of Well Screen: PVC ☑ Galvanized ☐
   Stainless ☐ Teflon ☐ Other _____
4. Diameter of Casing and Well Screen:
   Casing 2 Inches, Screen 2 Inches.
5. Slot Size of Screen: 0.010"
6. Type of Screen Perforation: Factory Slotted ☑
   Hacksaw ☐ Drilled ☐ Other _____
7. Installed Protector Pipe w/Lock: Yes ☐ No ☑

WELL DEVELOPMENT INFORMATION:

1. How was Well Developed ? Bailing ☐ Pumping ☑
   Air Surging (Air or Nitrogen) ☐ Other _____
2. Time Spent on Well Development ?
   43 / 0 Minutes/Hours
3. Approximate Water Volume Removed ? 30 Gallons
4. Water Clarity Before Development ? Clear ☐
   Turbid ☑ Opaque ☐
5. Water Clarity After Development ? Clear ☑
   Turbid ☐ Opaque ☐
6. Did Water have Odor ? Yes ☐ No ☑
   If Yes, Describe _____
7. Did Water have any Color ? Yes ☐ No ☑
   If Yes , Describe _____

WATER LEVEL INFORMATION:

Water Level Summary (From Top of Casing)

During Drilling 34 Ft. Date 7/9/02
Before Development 33.44 Ft. Date 7/10/02
After Development _____ Ft. Date _____

Driller/Firm S. GARRETT / KLEINFELDER Drill Rig Type MOBILE B-61 Date Installed 7/9/02
Drill Crew S. GARRETT / K. GROOVER Well No. M-113 Kerr-McGee Hydrologist T. REED

SOIL BORING LOG KM—5655-A

KERR-McGEE CORPORATION Hydrology Dept. Engineering Services	KM SUBSIDIARY KMCLLC	LOCATION HENDERSON	BORING NUMBER M-114

DEPTH IN FEET	LITHOLOGIC DESCRIPTION	GRAPHIC LOG	UNIFIED SOIL FIELD CLASS.	BLOWS PER FOOT	PID (ppm)	SOIL SAMPLE NO.	SOIL SAMPLE TYPE	SOIL SAMPLE DEPTH	SOIL SAMPLE REC.	REMARKS OR FIELD OBSERVATIONS
0	FILL; SAND W/ GRAVEL; SOME ORGANIC DEBRIS; "COFFEE GROUNDS" TEXTURE; BROWNISH-BLACK									
4.5										
5	SANDY GRAVEL; ORANGE-BROWN; DRY		GM							
5.5										
10	SAND / SILTY SAND W/ GRAVEL; F-COARSE GRAINED; ORANGE-BROWN GRADING TO RED-BROWN; DRY		SM							
15	SAND AS ABOVE; GRAVEL @ 17'									
20	SAND AS ABOVE; GRAVEL @ 21'									
24										
25	SANDY GRAVEL; REDDISH-BROWN; DRY		GM							
26										
30	SAND / SILTY SAND; OCC. GRAVEL; REDDISH-ORANGE BROWN; DRY TO SLI. MOIST		SM							
35										
40	SAND AS ABOVE; BECOMING MOIST									EASY DRILLING FROM 39-40'

EXPLANATION

- ▼ Water Table (24 Hour)
- ▽ Water Table (Time of Boring)
- PID Photoionization Detection (ppm)
- NO. Identifies Sample by Number
- TYPE Sample Collection Method

SPLIT-BARREL; AUGER; ROCK CORE; THIN-WALLED TUBE; CONTINUOUS SAMPLER; NO RECOVERY

DEPTH Depth Top and Bottom of Sample
REC. Actual Length of Recovered Sample in Feet

GRAPHIC LOG LEGEND

CLAY; SILT; SAND; GRAVEL; SILTY CLAY; CLAYEY SILT; DEBRIS FILL; HIGHLY ORGANIC (PEAT); SANDY CLAY; CLAYEY SAND; _____; _____

DATE DRILLED	7/9-10/02
PAGE	1 of 2
DRILLING METHOD	HOLLOW STEM AUGER
DRILLED BY	KLEINFELDER, INC.
LOGGED BY	T. REED
EXISTING GRADE ELEVATION (FT. AMSL)	
LOCATION OR GRID COORDINATES	

SOIL BORING LOG KM—5655-A

KERR-McGEE CORPORATION Hydrology Dept. Engineering Services	KM SUBSIDIARY KMCLLC	LOCATION HENDERSON	BORING NUMBER M-114

DEPTH IN FEET	LITHOLOGIC DESCRIPTION	GRAPHIC LOG	UNIFIED SOIL FIELD CLASS.	BLOWS PER FOOT	PID (ppm)	SOIL SAMPLE NO.	SOIL SAMPLE TYPE	SOIL SAMPLE DEPTH	SOIL SAMPLE REC.	REMARKS OR FIELD OBSERVATIONS
40	SAND; AS ABOVE; MOIST		SM							
41	SILT / CLAYEY SILT; MED. BROWN; SATURATED @ 46'; OCC. FINE-MED. SAND [MUDDY CREEK]		ML							
45										
50										
55	TD 55'									

EXPLANATION

- ▼ Water Table (24 Hour)
- ▽ Water Table (Time of Boring)
- PID Photoionization Detection (ppm)
- NO. Identifies Sample by Number
- TYPE Sample Collection Method
- SPLIT-BARREL
- AUGER
- ROCK CORE
- THIN-WALLED TUBE
- CONTINUOUS SAMPLER
- NO RECOVERY
- DEPTH Depth Top and Bottom of Sample
- REC. Actual Length of Recovered Sample in Feet

GRAPHIC LOG LEGEND

- CLAY
- SILT
- SAND
- GRAVEL
- SILTY CLAY
- CLAYEY SILT
- DEBRIS FILL
- HIGHLY ORGANIC (PEAT)
- SANDY CLAY
- CLAYEY SAND
- _____
- _____

DATE DRILLED: 7/9-10/02

PAGE: 2 of 2

DRILLING METHOD: HOLLOW STEM AUGER

DRILLED BY: KLEINFELDER, INC.

LOGGED BY: T. REED

EXISTING GRADE ELEVATION (FT. AMSL)

LOCATION OR GRID COORDINATES

KERR-McGEE CORPORATION
HYDROLOGY DEPARTMENT
MONITORING WELL INSTALLATION DIAGRAM

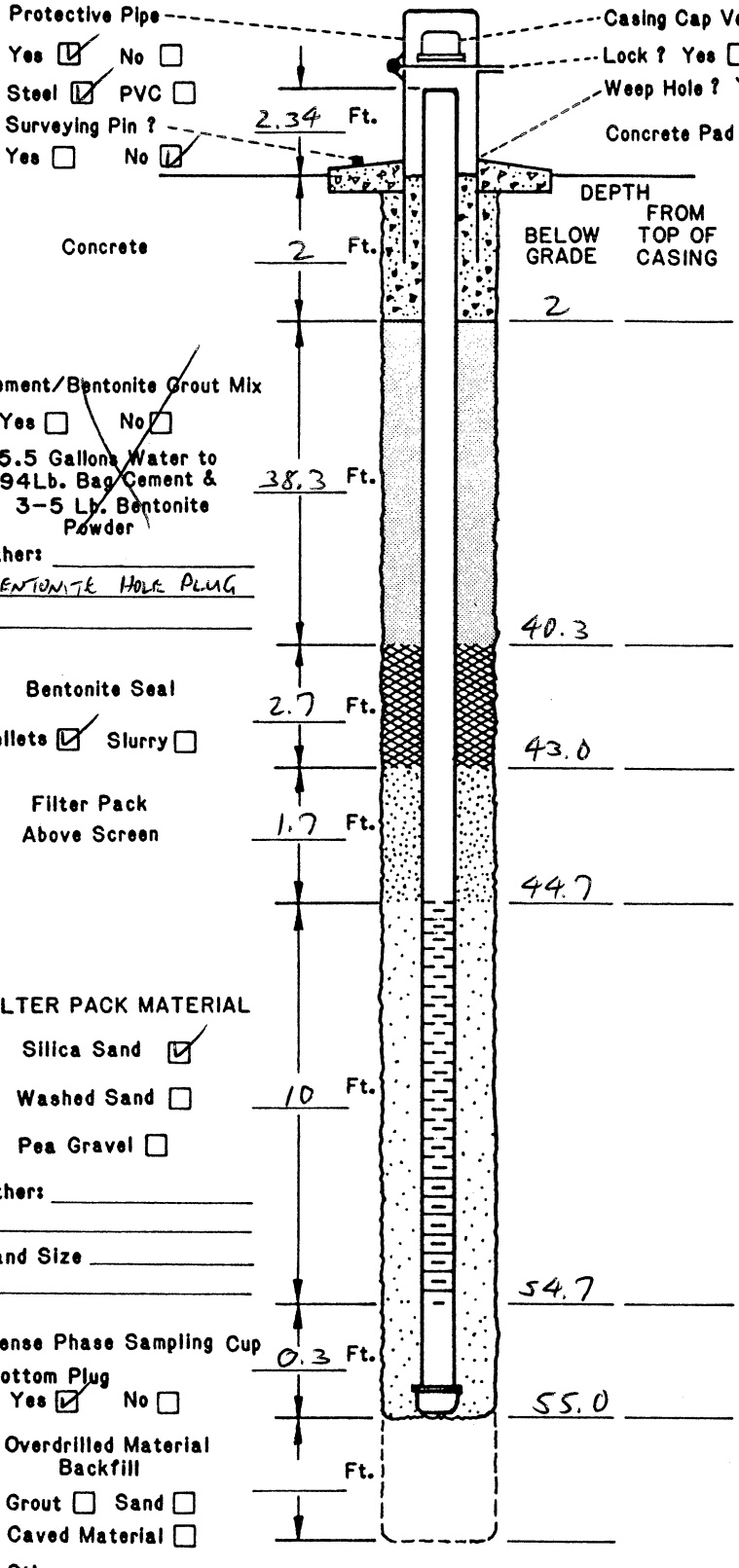

Concrete Pad _____ Ft. x _____ Ft. x _____ Inches

DRILLING INFORMATION:

1. Borehole Diameter= 8 Inches.
2. Were Drilling Additives Used ? Yes ☐ No ☑
   Revert ☐ Bentonite ☐ Water ☐
   Solid Auger ☐ Hollow Stem Auger ☑
3. Was Outer Steel Casing Used ? Yes ☐ No ☑
   Depth= _____ to _____ Feet.
4. Borehole Diameter for Outer Casing _____ Inches.

WELL CONSTRUCTION INFORMATION:

1. Type of Casing: PVC ☑ Galvanized ☐ Teflon ☐
   Stainless ☐ Other _____
2. Type of Casing Joints: Screw-Couple ☑ Glue-Couple ☐ Other _____
3. Type of Well Screen: PVC ☑ Galvanized ☐
   Stainless ☐ Teflon ☐ Other _____
4. Diameter of Casing and Well Screen:
   Casing 2 Inches, Screen 2 Inches.
5. Slot Size of Screen: 0.010 "
6. Type of Screen Perforation: Factory Slotted ☑
   Hacksaw ☐ Drilled ☐ Other _____
7. Installed Protector Pipe w/Lock: Yes ☑ No ☐

WELL DEVELOPMENT INFORMATION:

1. How was Well Developed ? Bailing ☐ Pumping ☐
   Air Surging (Air or Nitrogen) ☐ Other _____
2. Time Spent on Well Development ?
   46 / 0 Minutes/Hours
3. Approximate Water Volume Removed ? 25 Gallons
4. Water Clarity Before Development ? Clear ☐
   Turbid ☐ Opaque ☑
5. Water Clarity After Development ? Clear ☐
   Turbid ☑ Opaque ☐
6. Did Water have Oder ? Yes ☐ No ☑
   If Yes, Describe _____
7. Did Water have any Color ? Yes ☐ No ☑
   If Yes , Describe _____

WATER LEVEL INFORMATION:

Water Level Summary (From Top of Casing)

During Drilling 46 Ft. Date 7/9/02

Before Development 47.28 Ft. Date 7/10/02

After Development _____ Ft. Date _____

Driller/Firm S. GARRETT / KLEINFELDER Drill Rig Type MOBILE B-61 Date Installed 7/10/02

Drill Crew S. GARRETT / K. GROOVER Well No. M-114 Kerr-McGee Hydrologist T. REED

KERR-McGEE CORPORATION
HYDROLOGY DEPARTMENT
MONITORING WELL INSTALLATION DIAGRAM

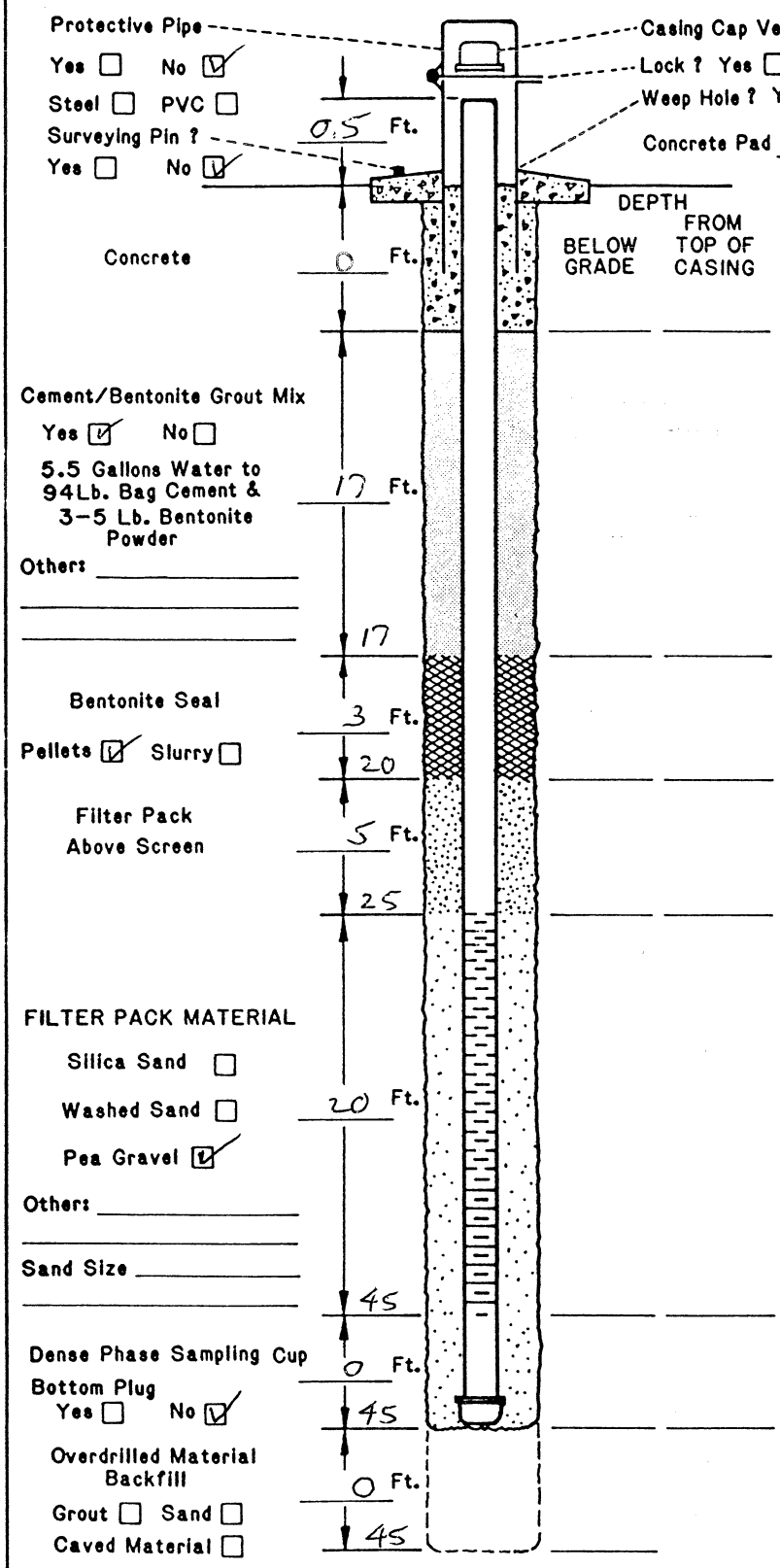

DRILLING INFORMATION:

1. Borehole Diameter= 36 Inches.
2. Were Drilling Additives Used ? Yes ☐ No ☑
   Revert ☐ Bentonite ☐ Water ☐
   Solid Auger ☑ Hollow Stem Auger ☐
3. Was Outer Steel Casing Used ? Yes ☐ No ☑
   Depth= _____ to _____ Feet.
4. Borehole Diameter for Outer Casing _____ Inches.

WELL CONSTRUCTION INFORMATION:

1. Type of Casing: PVC ☐ Galvanized ☑ Teflon ☐
   Stainless ☐ Other _____
2. Type of Casing Joints: Screw-Couple ☑ Glue-Couple ☐ Other _____
3. Type of Well Screen: PVC ☐ Galvanized ☑
   Stainless ☐ Teflon ☐ Other _____
4. Diameter of Casing and Well Screen:
   Casing 18 Inches, Screen 18 Inches.
5. Slot Size of Screen: -
6. Type of Screen Perforation: Factory Slotted ☐
   Hacksaw ☐ Drilled ☐ Other TORCH CUT
7. Installed Protector Pipe w/Lock: Yes ☐ No ☑

WELL DEVELOPMENT INFORMATION:

1. How was Well Developed ? Bailing ☐ Pumping ☑
   Air Surging (Air or Nitrogen) ☐ Other _____
2. Time Spent on Well Development ?
   30 / 1 Minutes/Hours
3. Approximate Water Volume Removed ? 1000 Gallons
4. Water Clarity Before Development ? Clear ☐
   Turbid ☐ Opaque ☑
5. Water Clarity After Development ? Clear ☑
   Turbid ☐ Opaque ☐
6. Did Water have Odor ? Yes ☐ No ☑
   If Yes, Describe _____
7. Did Water have any Color ? Yes ☐ No ☑
   If Yes , Describe _____

WATER LEVEL INFORMATION:

Water Level Summary (From Top of Casing)

During Drilling _____ Ft. Date _____
Before Development _____ Ft. Date _____
After Development ~27.00 Ft. Date 4/14/00

Driller/Firm ALLEN DRILLING Drill Rig Type _____ Date Installed 4/10/00
Drill Crew _____ Well No. I-AR Kerr-McGee Hydrologist M. SATTERFIELD

LITHOLOGY AND WELL CONSTRUCTION DIAGRAM
WELL I- A
HENDERSON, NEVADA

P-A
3/27/00

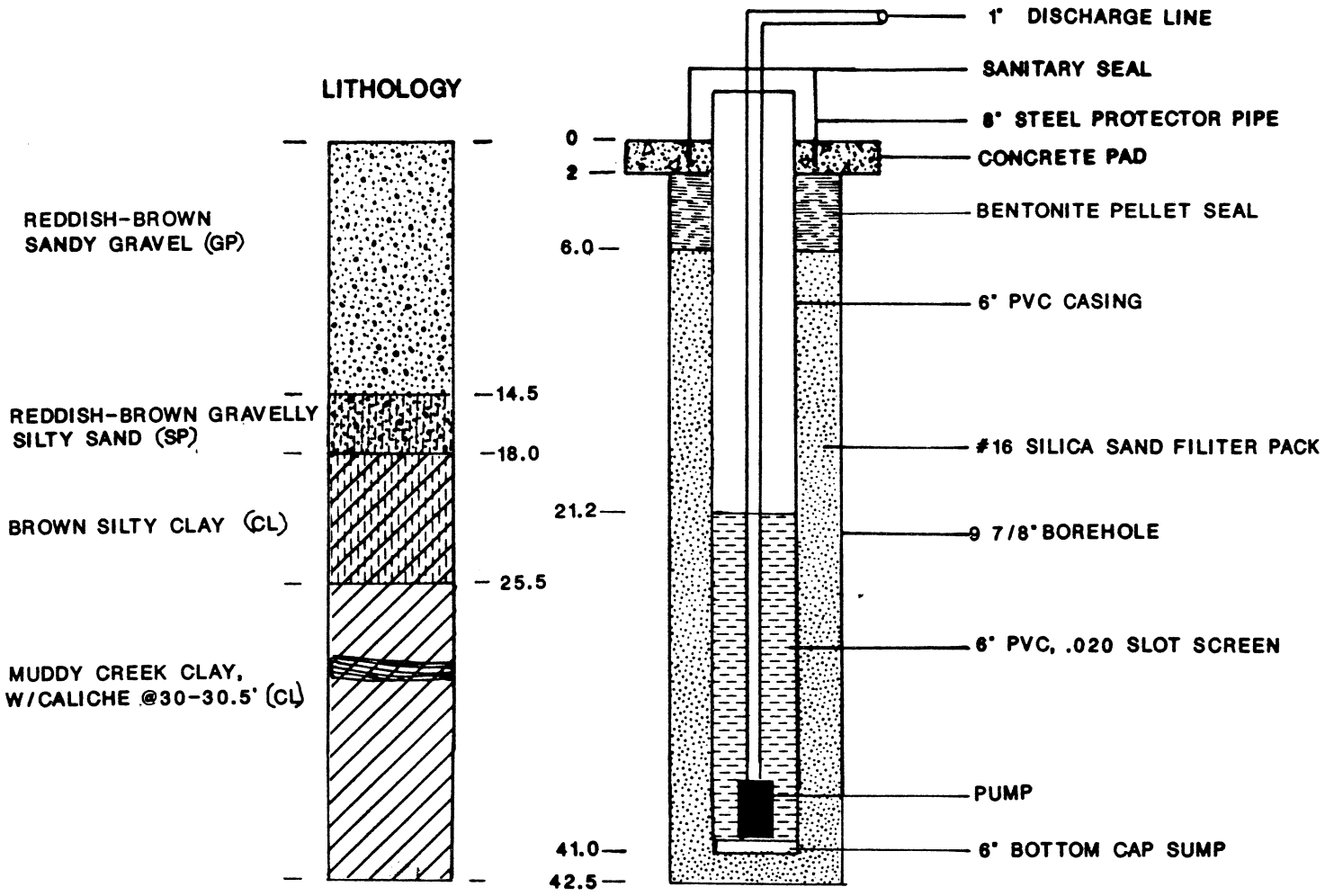

NOTE: ALL DISTANCES ARE REFERENCED TO GROUND ELEVATION

DRILLED:	12-11-86 BY BRINER DRLG
METHOD:	ROTARY AIR, FOAM
LOGGED BY:	WYNDAL M. GOODMAN, KM
TOC ELEVATION:	1752.59 FT, MEAN SEA LEVEL
PUMP:	GRUNDFOS SP1-34

LITHOLOGY AND WELL CONSTRUCTION DIAGRAM

WELL I-B

HENDERSON, NEVADA

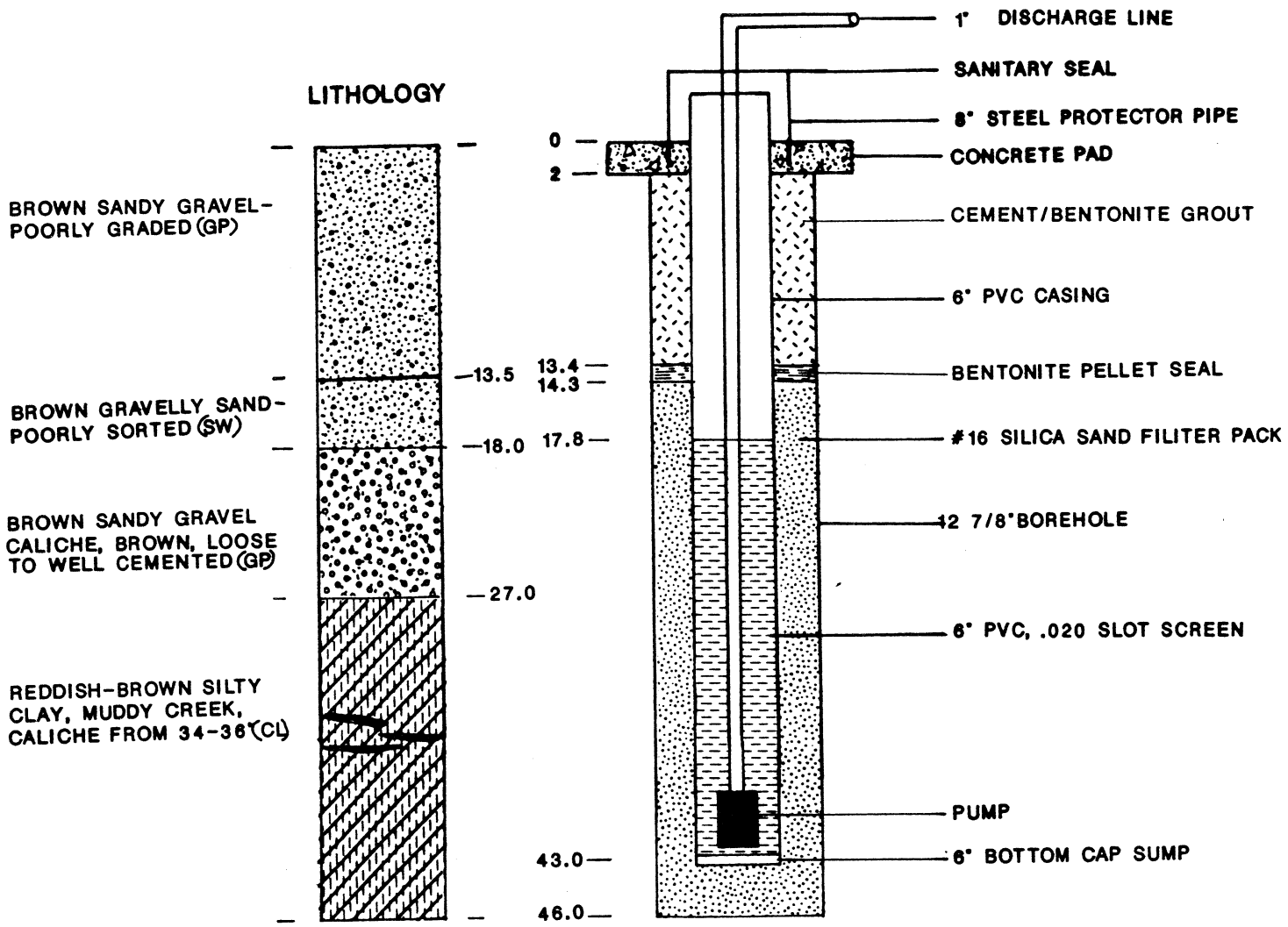

NOTE: ALL DISTANCES ARE REFERENCED TO GROUND ELEVATION

DRILLED:	10-1-86 BY DIMICK DRLG
METHOD:	ROTARY AIR, FOAM
LOGGED BY:	WYNDAL M. GOODMAN, KM
TOC ELEVATION:	1752.24 FT, MEAN SEA LEVEL
PUMP:	GRUNDFOS SP1-34

LITHOLOGY AND WELL CONSTRUCTION DIAGRAM
WELL I-C
HENDERSON, NEVADA

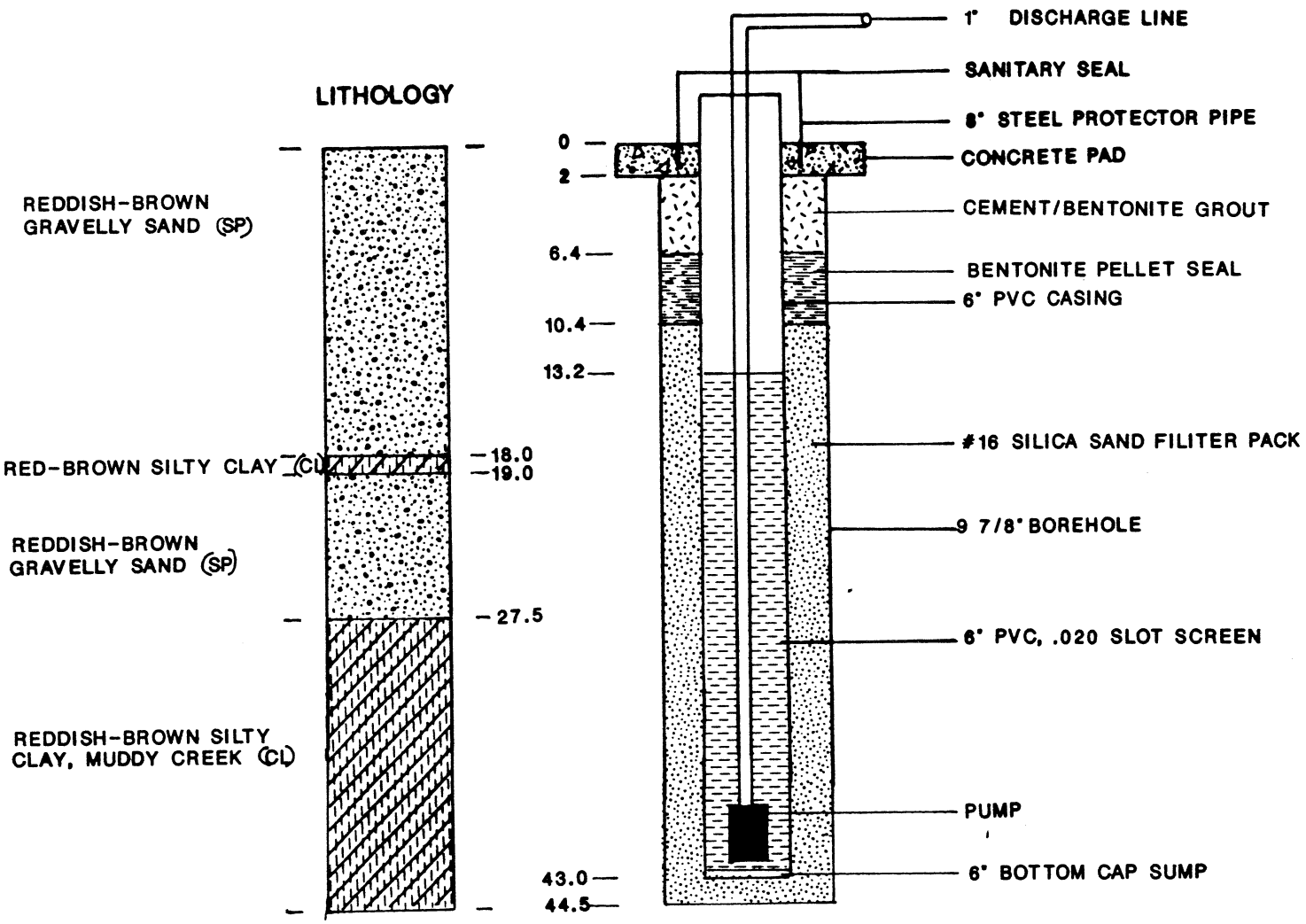

NOTE: ALL DISTANCES ARE REFERENCED TO GROUND ELEVATION

DRILLED:	12-11-86 BY BRINER DRLG
METHOD:	ROTARY AIR, FOAM
LOGGED BY:	WYNDAL M. GOODMAN, KM
TOC ELEVATION:	1752.02 FT, MEAN SEA LEVEL
PUMP:	GRUNDFOS SP1-34

LITHOLOGY AND WELL CONSTRUCTION DIAGRAM
WELL I-D
HENDERSON, NEVADA

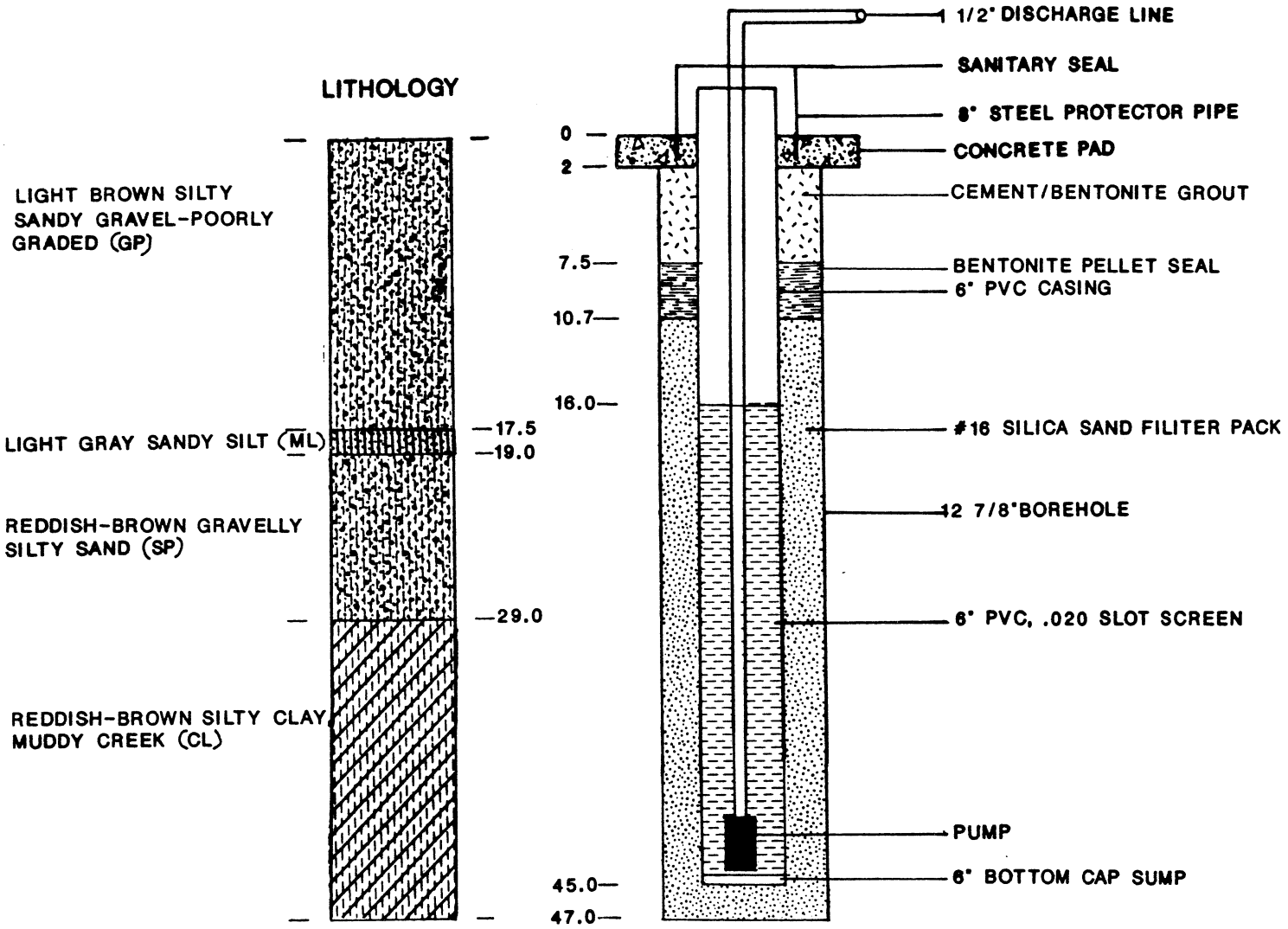

NOTE: ALL DISTANCES ARE REFERENCED TO GROUND ELEVATION

DRILLED:	9-24-86 BY DIMICK DRLG
METHOD:	ROTARY AIR, FOAM
LOGGED BY:	WYNDAL M. GOODMAN, KM
TOC ELEVATION:	1720.56 FT, MEAN SEA LEVEL
PUMP:	GRUNDFOS SP8-5

LITHOLOGY AND WELL CONSTRUCTION DIAGRAM
WELL I-E
HENDERSON, NEVADA

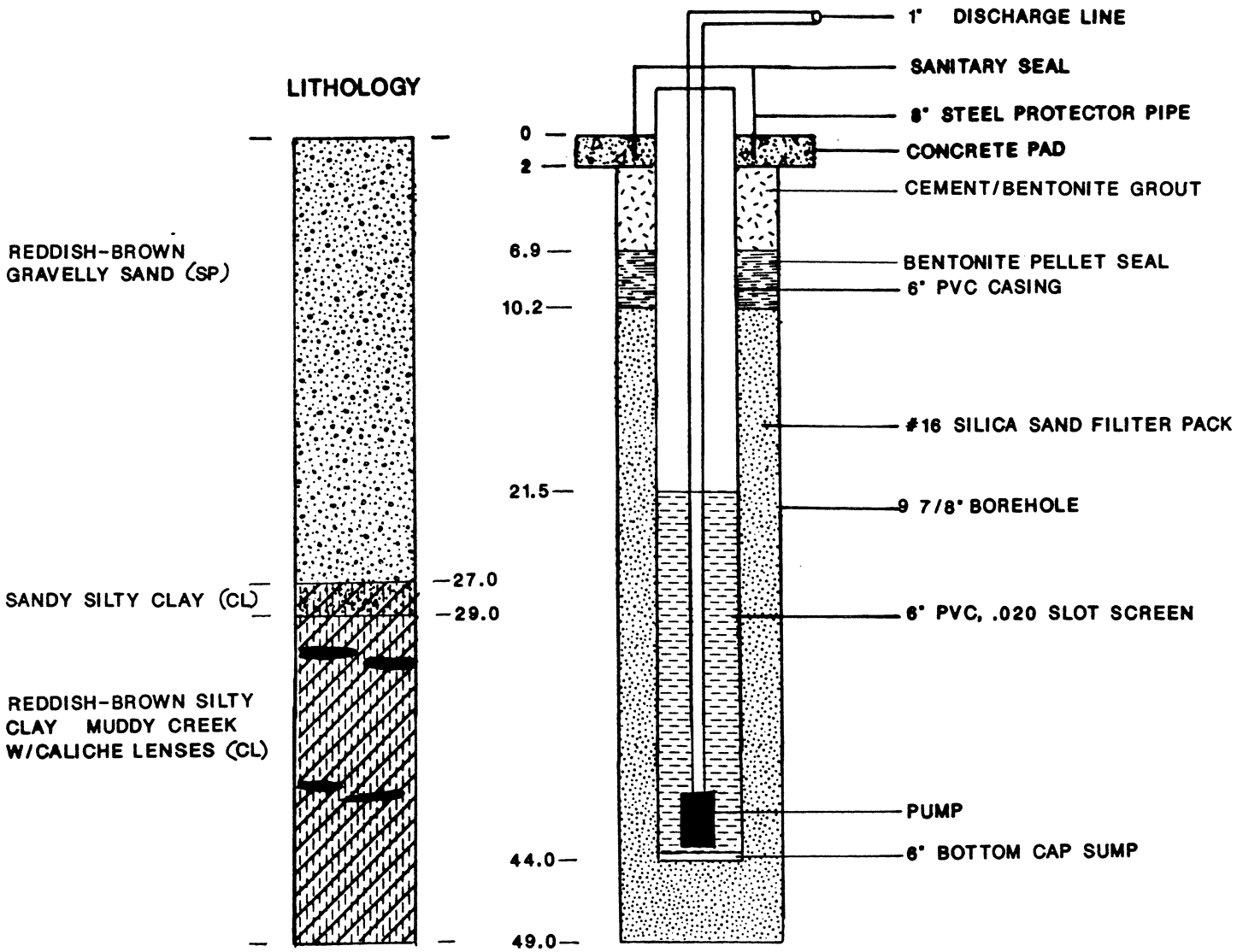

NOTE: ALL DISTANCES ARE REFERENCED TO GROUND ELEVATION

DRILLED:	12-11-86 BY BRINER DRLG
METHOD:	ROTARY AIR, FOAM
LOGGED BY:	WYNDAL M. GOODMAN, KM
TOC ELEVATION:	1751.65 FT. MEAN SEA LEVEL
PUMP:	GRUNDFOS SP2-26

LITHOLOGY AND WELL CONSTRUCTION DIAGRAM

WELL I-F

HENDERSON, NEVADA

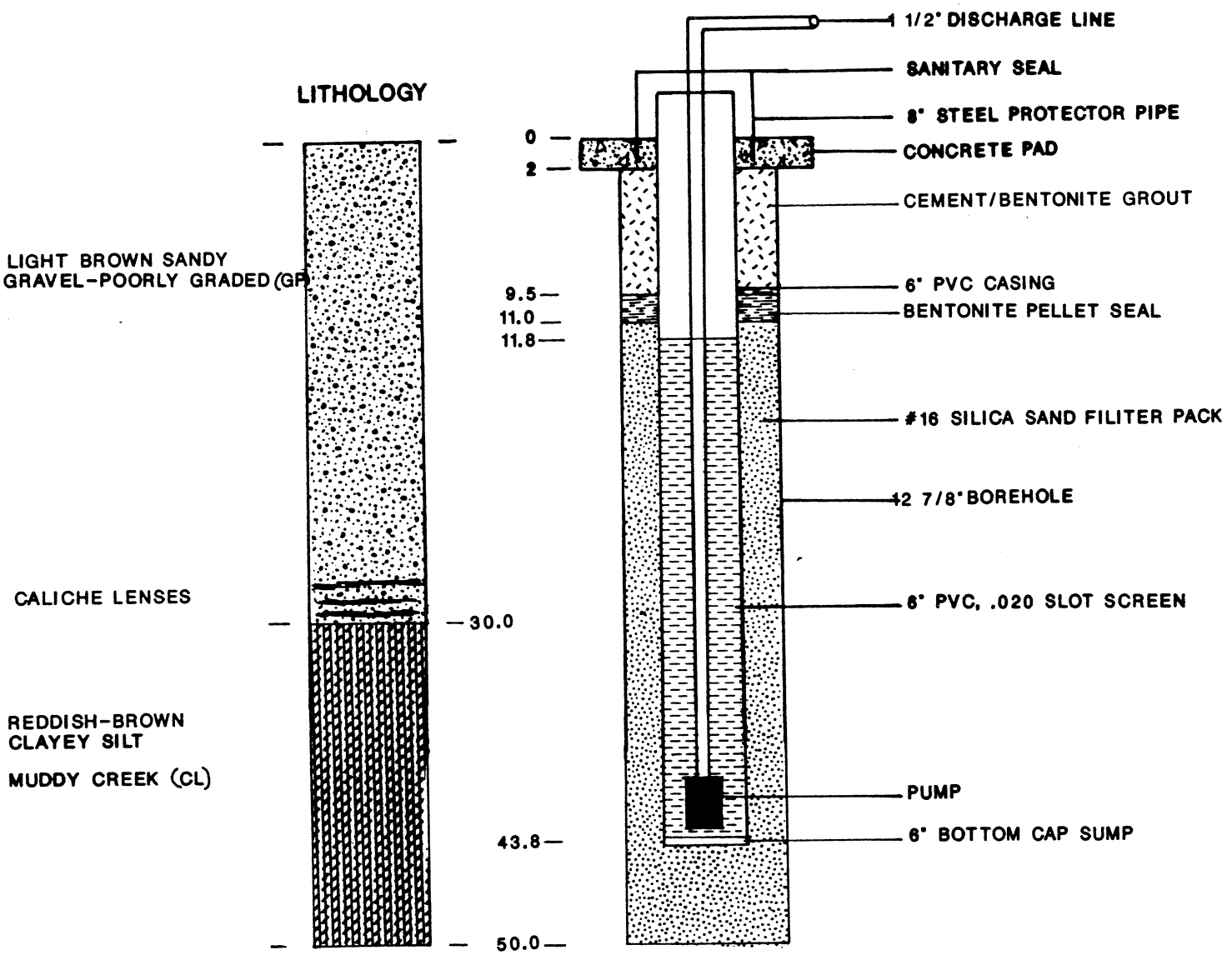

NOTE: ALL DISTANCES ARE REFERENCED TO GROUND ELEVATION

DRILLED:	9-24-86 BY DIMICK DRLG
METHOD:	ROTARY AIR, FOAM
LOGGED BY:	WYNDAL M. GOODMAN, KM
TOC ELEVATION:	1749.03 FT, MEAN SEA LEVEL
PUMP:	GRUNDFOS SP8-5

LITHOLOGY AND WELL CONSTRUCTION DIAGRAM
WELL I-G
HENDERSON, NEVADA

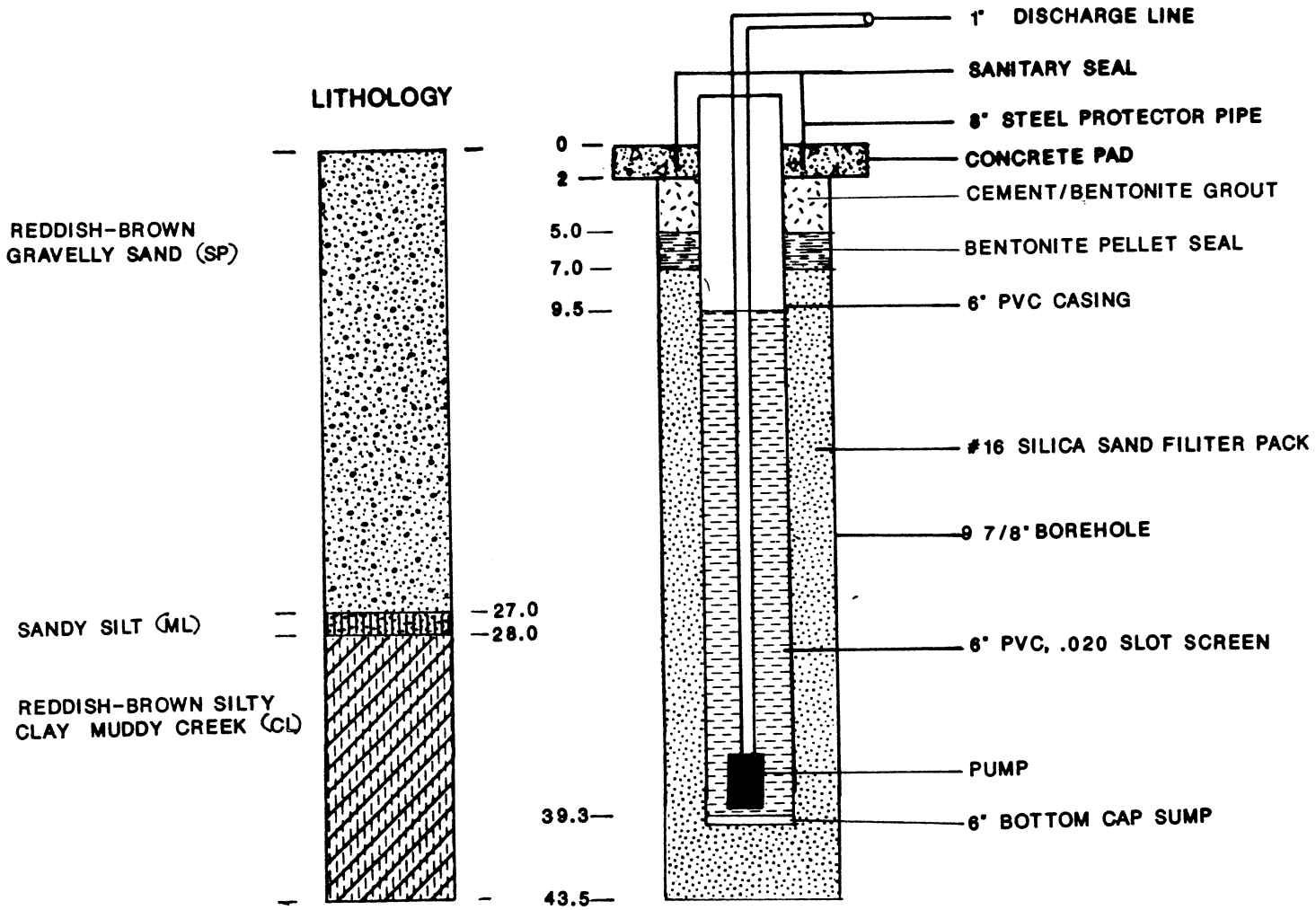

NOTE: ALL DISTANCES ARE REFERENCED TO GROUND ELEVATION

DRILLED:	12-12-86 BY BRINER DRLG
METHOD:	ROTARY AIR, FOAM
LOGGED BY:	WYNDAL M. GOODMAN, KM
TOC ELEVATION:	1751.86 FT, MEAN SEA LEVEL
PUMP:	GRUNDFOS SP2-26

LITHOLOGY AND WELL CONSTRUCTION DIAGRAM
WELL I-H
HENDERSON, NEVADA

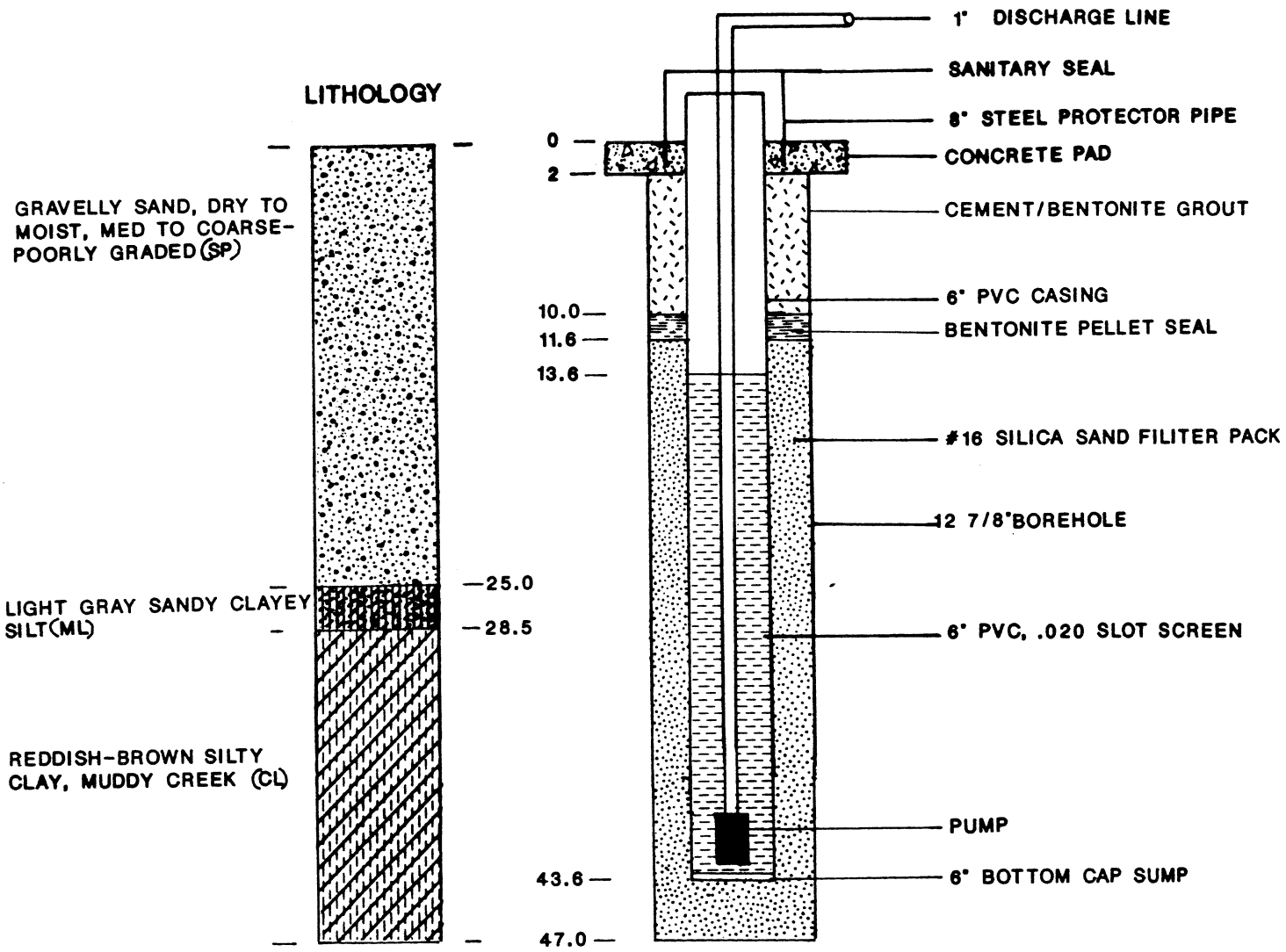

NOTE: ALL DISTANCES ARE REFERENCED TO GROUND ELEVATION

DRILLED:	9-25-86 BY DIMICK DRLG
METHOD:	ROTARY AIR, FOAM
LOGGED BY:	WYNDAL M. GOODMAN, KM
TOC ELEVATION:	1752.50 FT, MEAN SEA LEVEL
PUMP:	GRUNDFOS SP2-26

LITHOLOGY AND WELL CONSTRUCTION DIAGRAM

WELL I-1

HENDERSON, NEVADA

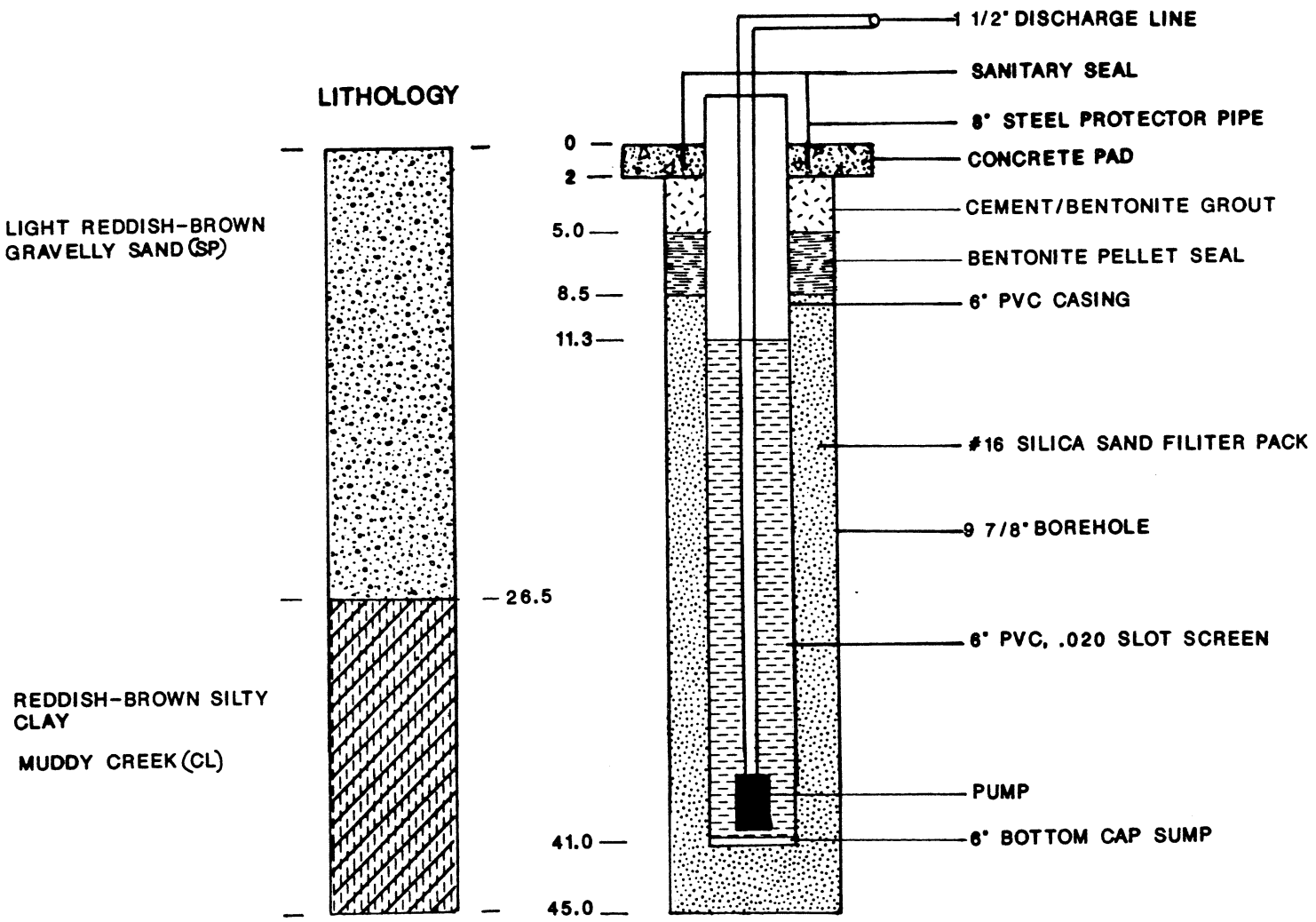

NOTE: ALL DISTANCES ARE REFERENCED TO GROUND ELEVATION

DRILLED:	12-10-86 BY BRINER DRLG
METHOD:	ROTARY AIR, FOAM
LOGGED BY:	WYNDAL M. GOODMAN, KM
TOC ELEVATION:	1745.03 FT, MEAN SEA LEVEL
PUMP:	GRUNDFOS SP4-14

LITHOLOGY AND WELL CONSTRUCTION DIAGRAM

WELL I-J

HENDERSON, NEVADA

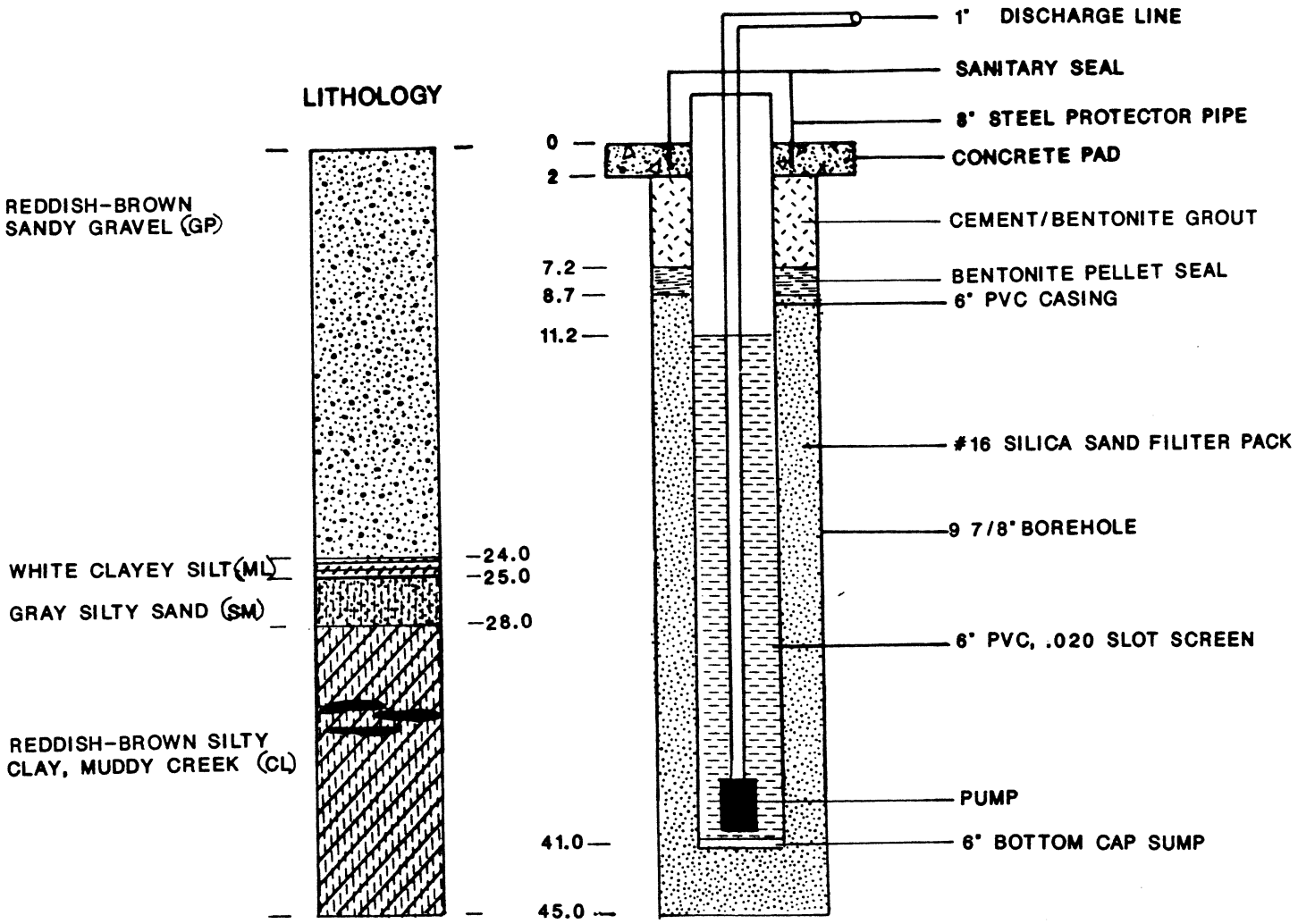

NOTE: ALL DISTANCES ARE REFERENCED TO GROUND ELEVATION

DRILLED:	12-9-86 BY BRINER DRLG
METHOD:	ROTARY WASH, BENTONITE
LOGGED BY:	WYNDAL M. GOODMAN, KM
TOC ELEVATION:	1749.57 FT, MEAN SEA LEVEL
PUMP:	GRUNDFOS SP 2-26

LITHOLOGY AND WELL CONSTRUCTION DIAGRAM
WELL I-K
HENDERSON, NEVADA

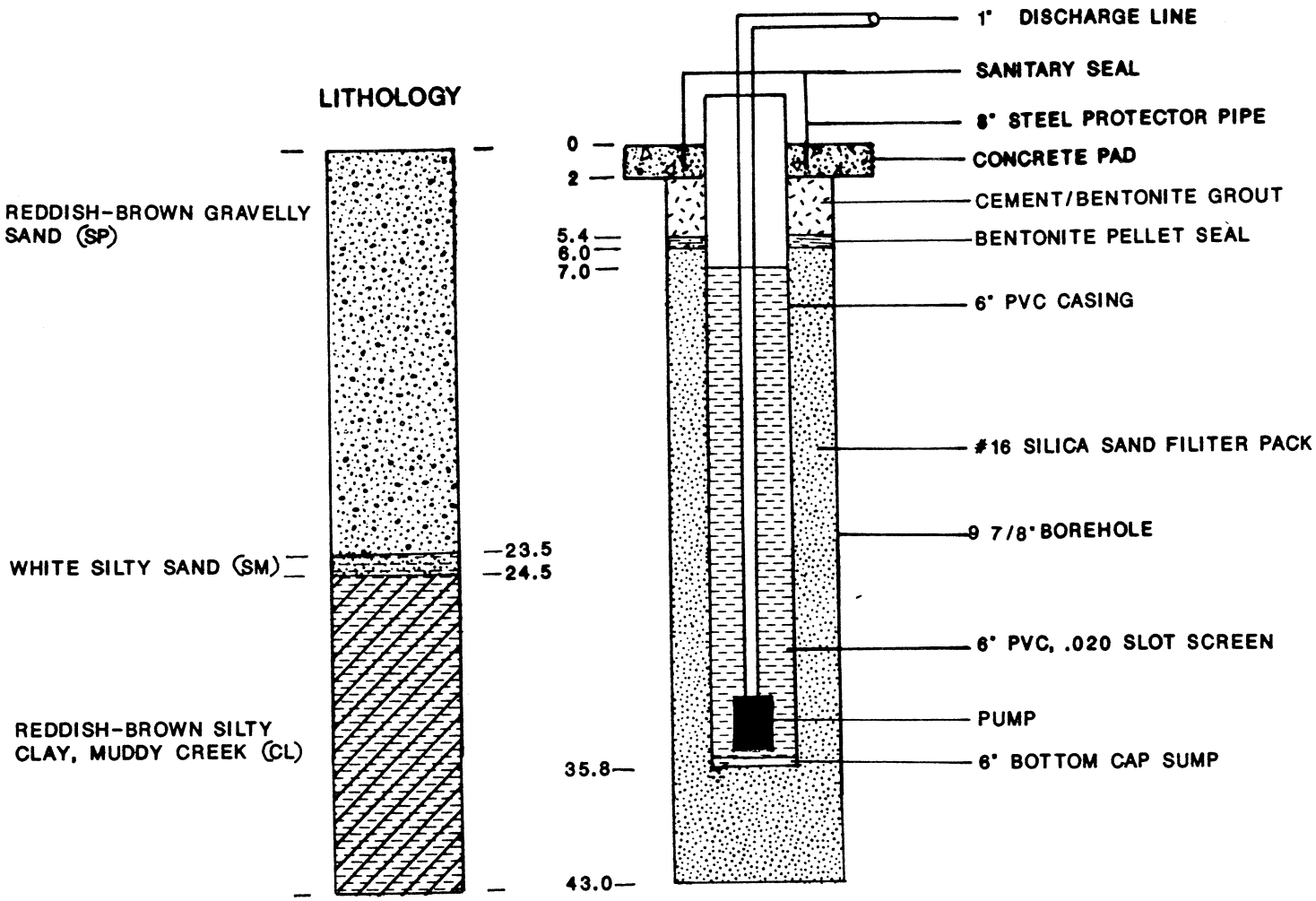

NOTE: ALL DISTANCES ARE REFERENCED TO GROUND ELEVATION

DRILLED:	12-12-86 BY BRINER DRLG
METHOD:	ROTARY WASH, BENTONITE
LOGGED BY:	WYNDAL M. GOODMAN, KM
TOC ELEVATION:	1745.49 FT, MEAN SEA LEVEL
PUMP:	GRUNDFOS SP2-26

SOIL BORING LOG KM—5655-A

KERR-McGEE CORPORATION Hydrology Dept. Engineering Services	KM SUBSIDIARY Chemical	LOCATION Henderson, NE	BORING NUMBER I-L

DEPTH IN FEET	LITHOLOGIC DESCRIPTION	GRAPHIC LOG	UNIFIED SOIL FIELD CLASS.	BLOWS PER FOOT	PID (ppm)	SOIL SAMPLE NO.	SOIL SAMPLE TYPE	SOIL SAMPLE DEPTH	SOIL SAMPLE REC.	REMARKS OR FIELD OBSERVATIONS
0	coarse and medium SAND, silty some gravel		SM							Cuttings on the sieve described
5										
10										
15										
20	more gravelly to 28'		SM							hard drilling to appr. 28'
25			GM							
30	light brown clayey SILT		ML							
35										
40										

EXPLANATION

- ▼ Water Table (24 Hour)
- ▽ Water Table (Time of Boring)
- PID Photoionization Detection (ppm)
- NO. Identifies Sample by Number
- TYPE Sample Collection Method
- SPLIT-BARREL
- AUGER
- ROCK CORE
- THIN-WALLED TUBE
- CONTINUOUS SAMPLER
- NO RECOVERY
- DEPTH Depth Top and Bottom of Sample
- REC. Actual Length of Recovered Sample in Feet

GRAPHIC LOG LEGEND

- CLAY
- SILT
- SAND
- GRAVEL
- SILTY CLAY
- CLAYEY SILT
- DEBRIS FILL
- HIGHLY ORGANIC (PEAT)
- SANDY CLAY
- CLAYEY SAND
- _____
- _____

DATE DRILLED	10-14-93
PAGE	1 of 2
DRILLING METHOD	Rotary Mud - direct circ
DRILLED BY	Western Technologies
LOGGED BY	J. F.
EXISTING GRADE ELEVATION (FT. AMSL)	
LOCATION OR GRID COORDINATES	

SOIL BORING LOG KM—5655-A

KERR-McGEE CORPORATION Hydrology Dept. Engineering Services	KM SUBSIDIARY Chemical	LOCATION Henderson, NE	BORING NUMBER I-L

DEPTH IN FEET	LITHOLOGIC DESCRIPTION	GRAPHIC LOG	UNIFIED SOIL FIELD CLASS.	BLOWS PER FOOT	PID (ppm)	SOIL SAMPLE NO.	SOIL SAMPLE TYPE	SOIL SAMPLE DEPTH	SOIL SAMPLE REC.	REMARKS OR FIELD OBSERVATIONS
40	light brown clayey SILT		ML							Cuttings on the sieve described
45	T.D. = 45'									

EXPLANATION

- ▼ Water Table (24 Hour)
- ▽ Water Table (Time of Boring)
- PID Photoionization Detection (ppm)
- NO. Identifies Sample by Number
- TYPE Sample Collection Method

SPLIT-BARREL; AUGER; ROCK CORE; THIN-WALLED TUBE; CONTINUOUS SAMPLER; NO RECOVERY

- DEPTH Depth Top and Bottom of Sample
- REC. Actual Length of Recovered Sample in Feet

GRAPHIC LOG LEGEND

CLAY; SILT; SAND; GRAVEL; SILTY CLAY; CLAYEY SILT; DEBRIS FILL; HIGHLY ORGANIC (PEAT); SANDY CLAY; CLAYEY SAND; _____; _____

DATE DRILLED	10-14-93
PAGE	2 of 2
DRILLING METHOD	Rotary Mud - Tricon 10 3/4"
DRILLED BY	Western - Technologies
LOGGED BY	J. F.
EXISTING GRADE ELEVATION (FT. AMSL)	
LOCATION OR GRID COORDINATES	

KERR-McGEE CORPORATION
HYDROLOGY DEPARTMENT
MONITORING WELL INSTALLATION DIAGRAM

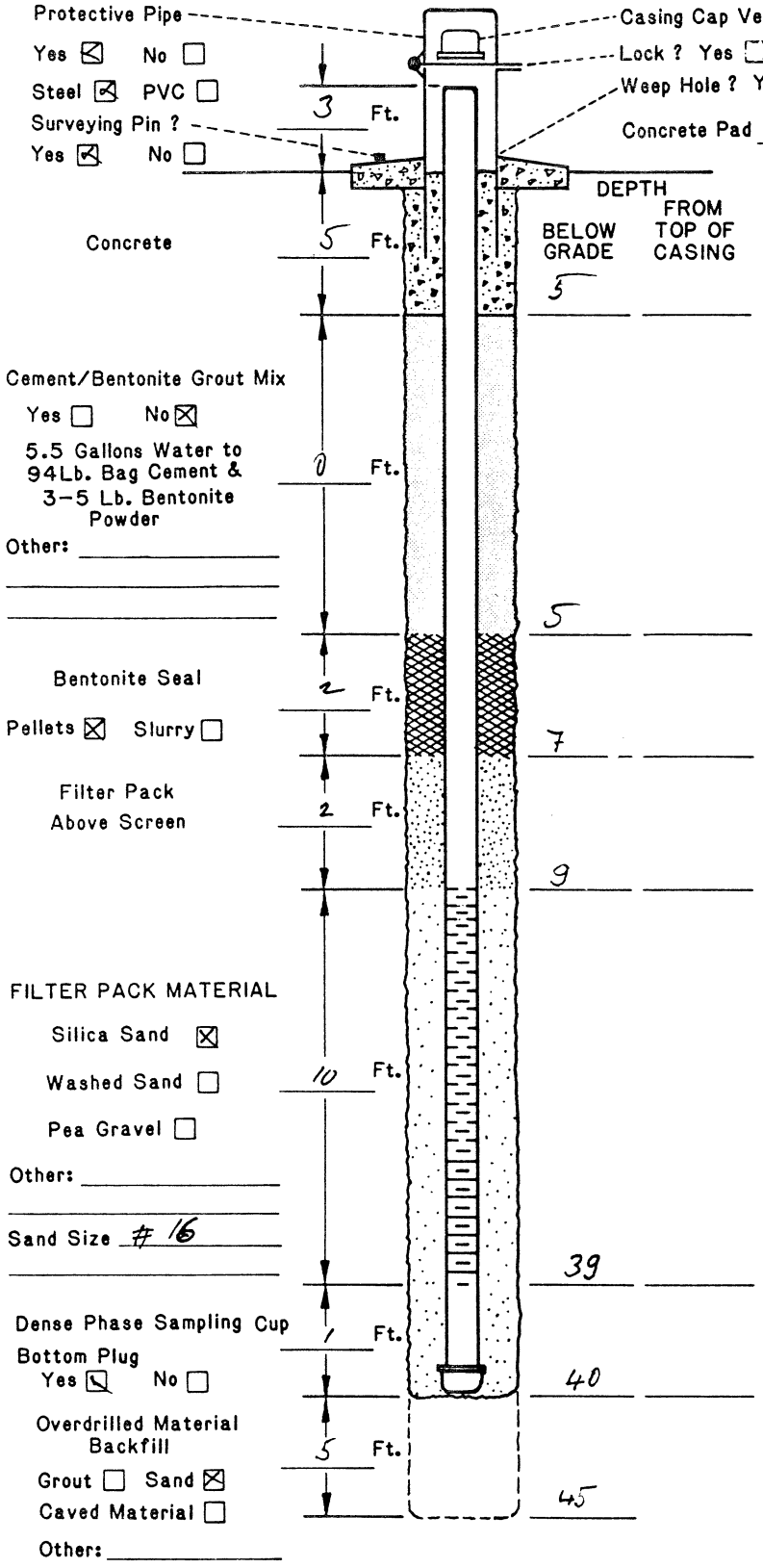

DRILLING INFORMATION:

1. Borehole Diameter= 10 3/4 Inches.
2. Were Drilling Additives Used ? Yes ☒ No ☐
   Revert ☐ Bentonite ☐ Water ☒
   Solid Auger ☒ Hollow Stem Auger ☐
3. Was Outer Steel Casing Used ? Yes ☐ No ☒
   Depth= _____ to _____ Feet.
4. Borehole Diameter for Outer Casing _____ Inches.

WELL CONSTRUCTION INFORMATION:

1. Type of Casing: PVC ☒ Galvanized ☐ Teflon ☐
   Stainless ☐ Other _____
2. Type of Casing Joints: Screw-Couple ☒ Glue-Couple ☐ Other _____
3. Type of Well Screen: PVC ☒ Galvanized ☐
   Stainless ☐ Teflon ☐ Other _____
4. Diameter of Casing and Well Screen:
   Casing 6" Inches, Screen 6" Inches.
5. Slot Size of Screen: 0.010"
6. Type of Screen Perforation: Factory Slotted ☒
   Hacksaw ☐ Drilled ☐ Other _____
7. Installed Protector Pipe w/Lock: Yes ☒ No ☐

WELL DEVELOPMENT INFORMATION:

1. How was Well Developed ? Bailing ☐ Pumping ☒
   Air Surging (Air or Nitrogen) ☒ Other _____
2. Time Spent on Well Development ?
   _____ / 1.5 Minutes/Hours
3. Approximate Water Volume Removed ? 150 Gallons
4. Water Clarity Before Development ? Clear ☐
   Turbid ☒ Opaque ☐
5. Water Clarity After Development ? Clear ☐
   Turbid ☐ Opaque ☒
6. Did Water have Oder ? Yes ☐ No ☒
   If Yes, Describe _____
7. Did Water have any Color ? Yes ☒ No ☐
   If Yes , Describe light brown

WATER LEVEL INFORMATION:

Water Level Summary (From Top of Casing)

During Drilling NA Ft. Date 10-14-93
Before Development 28.70 Ft. Date 10-15-93
After Development 28.60 Ft. Date 10-15-93

Driller/Firm GREG / Western Technol. Drill Rig Type _____ Date Installed 10-14-93

Drill Crew James + Rick Well No. I-L Kerr-McGee Hydrologist Jan Fajgl

SOIL BORING LOG KM—5655-A

KERR-McGEE CORPORATION Hydrology Dept. Engineering Services	KM SUBSIDIARY Chemical	LOCATION Henderson, NE	BORING NUMBER I-M

DEPTH IN FEET	LITHOLOGIC DESCRIPTION	GRAPHIC LOG	UNIFIED SOIL FIELD CLASS.	BLOWS PER FOOT	PID (ppm)	SOIL SAMPLE NO.	SOIL SAMPLE TYPE	SOIL SAMPLE DEPTH	SOIL SAMPLE REC.	REMARKS OR FIELD OBSERVATIONS
0	coarse and medium silty SAND with some gravel		SM							SOIL CUTTING ON THE SIEVE EXAMINED
5										
10										
15										
20			SM							
25	gravel/cobbles from appr. 26' to 30'		GM							Hard drilling
30	clayey SILT									
35			ML							
40										

EXPLANATION

- ▼ Water Table (24 Hour)
- ▽ Water Table (Time of Boring)
- PID Photoionization Detection (ppm)
- NO. Identifies Sample by Number
- TYPE Sample Collection Method

SPLIT-BARREL · AUGER · ROCK CORE · THIN-WALLED TUBE · CONTINUOUS SAMPLER · NO RECOVERY

DEPTH Depth Top and Bottom of Sample
REC. Actual Length of Recovered Sample in Feet

GRAPHIC LOG LEGEND

CLAY · SILT · SAND · GRAVEL · SILTY CLAY · CLAYEY SILT · DEBRIS FILL · HIGHLY ORGANIC (PEAT) · SANDY CLAY · CLAYEY SAND

DATE DRILLED	PAGE
10-14-93	1 of 2

DRILLING METHOD: Rotary Mud / Tricon

DRILLED BY: Western Technologies

LOGGED BY: J. F.

EXISTING GRADE ELEVATION (FT. AMSL)

LOCATION OR GRID COORDINATES

SOIL BORING LOG KM—5655-A

KERR-McGEE CORPORATION Hydrology Dept. Engineering Services	KM SUBSIDIARY Chemical	LOCATION Henderson, NE	BORING NUMBER I-M

DEPTH IN FEET	LITHOLOGIC DESCRIPTION	GRAPHIC LOG	UNIFIED SOIL FIELD CLASS.	BLOWS PER FOOT	PID (ppm)	SOIL SAMPLE NO.	SOIL SAMPLE TYPE	SOIL SAMPLE DEPTH	SOIL SAMPLE REC.	REMARKS OR FIELD OBSERVATIONS
40	clayey SILT			ML						
45	T.D. = 45'									

EXPLANATION

- ▼ Water Table (24 Hour)
- ▽ Water Table (Time of Boring)
- PID Photoionization Detection (ppm)
- NO. Identifies Sample by Number
- TYPE Sample Collection Method

SPLIT-BARREL; AUGER; ROCK CORE; THIN-WALLED TUBE; CONTINUOUS SAMPLER; NO RECOVERY

- DEPTH Depth Top and Bottom of Sample
- REC. Actual Length of Recovered Sample in Feet

GRAPHIC LOG LEGEND

CLAY; SILT; SAND; GRAVEL; SILTY CLAY; CLAYEY SILT; DEBRIS FILL; HIGHLY ORGANIC (PEAT); SANDY CLAY; CLAYEY SAND; _____; _____

DATE DRILLED	PAGE
10-14-93	2 of 2

DRILLING METHOD: Rotary Mud / Tricon

DRILLED BY: Western Technologies

LOGGED BY: J. F.

EXISTING GRADE ELEVATION (FT AMSL):

LOCATION OR GRID COORDINATES:

KERR-McGEE CORPORATION
HYDROLOGY DEPARTMENT
MONITORING WELL INSTALLATION DIAGRAM

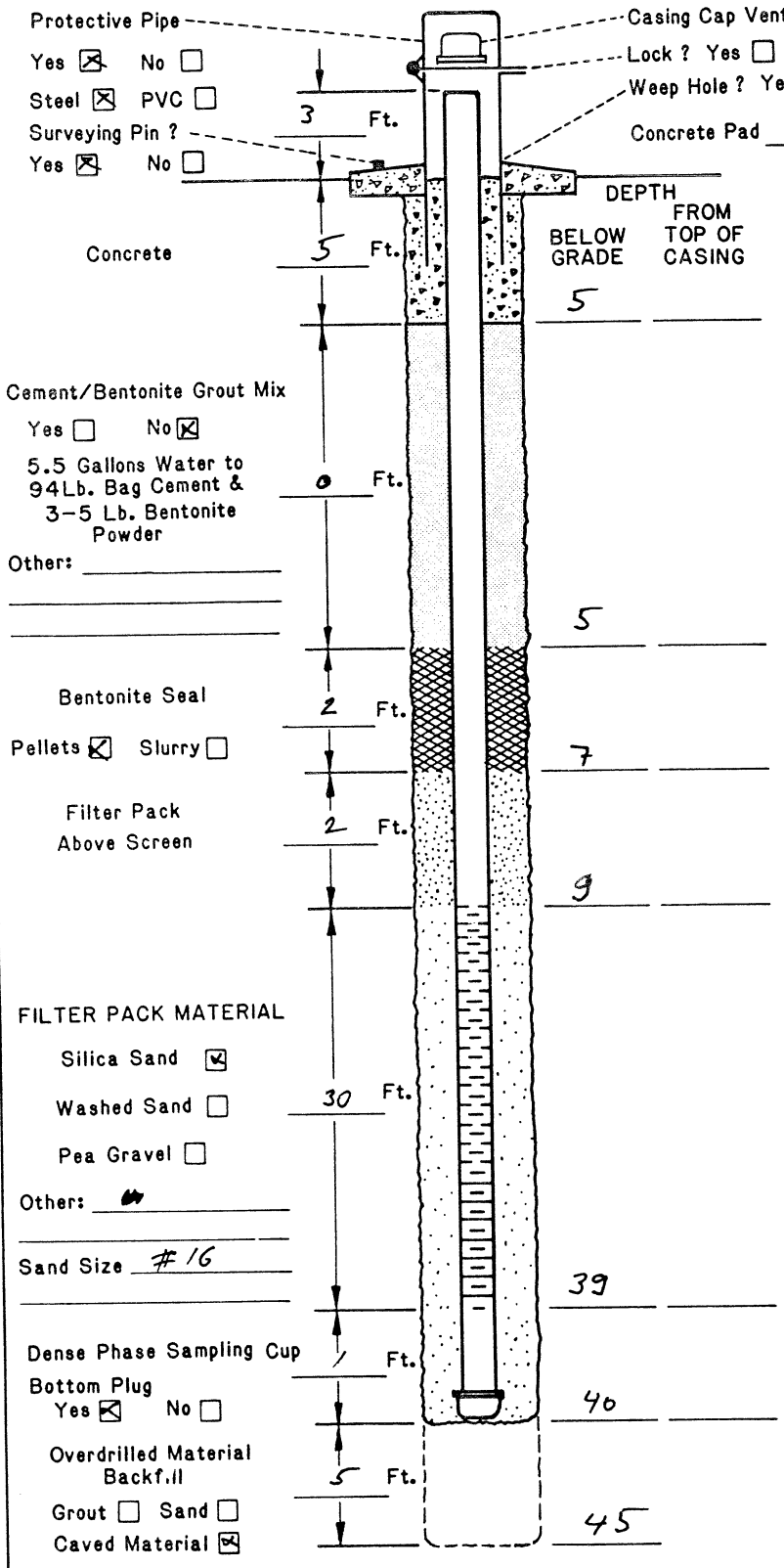

DRILLING INFORMATION:

1. Borehole Diameter= 10 3/4 Inches.
2. Were Drilling Additives Used ? Yes ☒ No ☐
   Revert ☐ Bentonite ☐ Water ☒
   Solid Auger ☒ Hollow Stem Auger ☐
3. Was Outer Steel Casing Used ? Yes ☐ No ☒
   Depth= _____ to _____ Feet.
4. Borehole Diameter for Outer Casing _____ Inches.

WELL CONSTRUCTION INFORMATION:

1. Type of Casing: PVC ☒ Galvanized ☐ Teflon ☐
   Stainless ☐ Other _____
2. Type of Casing Joints: Screw-Couple ☒ Glue-Couple ☐ Other _____
3. Type of Well Screen: PVC ☒ Galvanized ☐
   Stainless ☐ Teflon ☐ Other _____
4. Diameter of Casing and Well Screen:
   Casing 6 Inches, Screen 6 Inches.
5. Slot Size of Screen: 0.010
6. Type of Screen Perforation: Factory Slotted ☒
   Hacksaw ☐ Drilled ☐ Other _____
7. Installed Protector Pipe w/~~Lock~~: Yes ☒ No ☐

WELL DEVELOPMENT INFORMATION:

1. How was Well Developed ? Bailing ☐ Pumping ☒
   Air Surging (Air or Nitrogen) ☒ Other _____
2. Time Spent on Well Development ?
   _____ / 1.5 Minutes/Hours
3. Approximate Water Volume Removed ? 150 Gallons
4. Water Clarity Before Development ? Clear ☐
   Turbid ☒ Opaque ☐
5. Water Clarity After Development ? Clear ☐
   Turbid ☐ Opaque ☒
6. Did Water have Odor ? Yes ☐ No ☒
   If Yes, Describe _____
7. Did Water have any Color ? Yes ☒ No ☐
   If Yes , Describe light brown

WATER LEVEL INFORMATION:

Water Level Summary (From Top of Casing)

During Drilling N/A Ft. Date 10-14-93
Before Development 28.80 Ft. Date 10-15-93
After Development 28.10 Ft. Date 10-15-93

Driller/Firm GREG / WESTERN TECH. Drill Rig Type _____ Date Installed 10-14-92

Drill Crew WILSON/OGLE Well No. I-17 Kerr-McGee Hydrologist J. FAJGL

SOIL BORING LOG KM—5655-A

KERR-McGEE CORPORATION Hydrology Dept. Engineering Services	KM SUBSIDIARY Chemical	LOCATION Henderson, NE	BORING NUMBER I-N

DEPTH IN FEET	LITHOLOGIC DESCRIPTION	GRAPHIC LOG	UNIFIED SOIL FIELD CLASS.	BLOWS PER FOOT	PID (ppm)	SOIL SAMPLE NO.	SOIL SAMPLE TYPE	SOIL SAMPLE DEPTH	SOIL SAMPLE REC.	REMARKS OR FIELD OBSERVATIONS
0	medium to coarse SAND silty, gravelly		SM							Soil cuttings on the sieve described
5										tricon bit 10 3/4" diameter used for drilling
10	same as above									
15										
20										
25	2 cobbles from 27' to 34'		SM							very hard drilling from 27' to 34'
30	– light gray clayey SILT – started at 34'		GM							
35			ML							
40										

EXPLANATION

- ▼ Water Table (24 Hour)
- ▽ Water Table (Time of Boring)
- PID Photoionization Detection (ppm)
- NO. Identifies Sample by Number
- TYPE Sample Collection Method
- SPLIT-BARREL
- AUGER
- ROCK CORE
- THIN-WALLED TUBE
- CONTINUOUS SAMPLER
- NO RECOVERY
- DEPTH Depth Top and Bottom of Sample
- REC. Actual Length of Recovered Sample in Feet

GRAPHIC LOG LEGEND

- CLAY
- SILT
- SAND
- GRAVEL
- SILTY CLAY
- CLAYEY SILT
- DEBRIS FILL
- HIGHLY ORGANIC (PEAT)
- SANDY CLAY
- CLAYEY SAND
- _____
- _____

DATE DRILLED	10-13-93
PAGE	1 of 2
DRILLING METHOD	Rotary Mud - direct flush
DRILLED BY	Western Technologies
LOGGED BY	J.F.
EXISTING GRADE ELEVATION (FT. AMSL)	
LOCATION OR GRID COORDINATES	

SOIL BORING LOG KM—5655-A

KERR-McGEE CORPORATION Hydrology Dept. Engineering Services	KM SUBSIDIARY Chemical	LOCATION Henderson, NE	BORING NUMBER I-N

DEPTH IN FEET	LITHOLOGIC DESCRIPTION	GRAPHIC LOG	UNIFIED SOIL FIELD CLASS.	BLOWS PER FOOT	PID (ppm)	SOIL SAMPLE NO.	SOIL SAMPLE TYPE	SOIL SAMPLE DEPTH	SOIL SAMPLE REC.	REMARKS OR FIELD OBSERVATIONS
40	light gray c.f. SILT		ML							
45	T.D. = 45'									
11										
15										
20										
25										
30										
35										
40										

EXPLANATION

- ▼ Water Table (24 Hour)
- ▽ Water Table (Time of Boring)
- PID Photoionization Detection (ppm)
- NO. Identifies Sample by Number
- TYPE Sample Collection Method

SPLIT-BARREL · AUGER · ROCK CORE · THIN-WALLED TUBE · CONTINUOUS SAMPLER · NO RECOVERY

DEPTH Depth Top and Bottom of Sample
REC. Actual Length of Recovered Sample in Feet

GRAPHIC LOG LEGEND

CLAY · SILT · SAND · GRAVEL · SILTY CLAY · CLAYEY SILT · DEBRIS FILL · HIGHLY ORGANIC (PEAT) · SANDY CLAY · CLAYEY SAND

DATE DRILLED: 10-13-93	PAGE: 2 of 2
DRILLING METHOD: Rotary Mud - direct flush	
DRILLED BY: Western Technologies	
LOGGED BY: J.F.	
EXISTING GRADE ELEVATION (FT. AMSL)	
LOCATION OR GRID COORDINATES	

KERR-McGEE CORPORATION
HYDROLOGY DEPARTMENT
MONITORING WELL INSTALLATION DIAGRAM

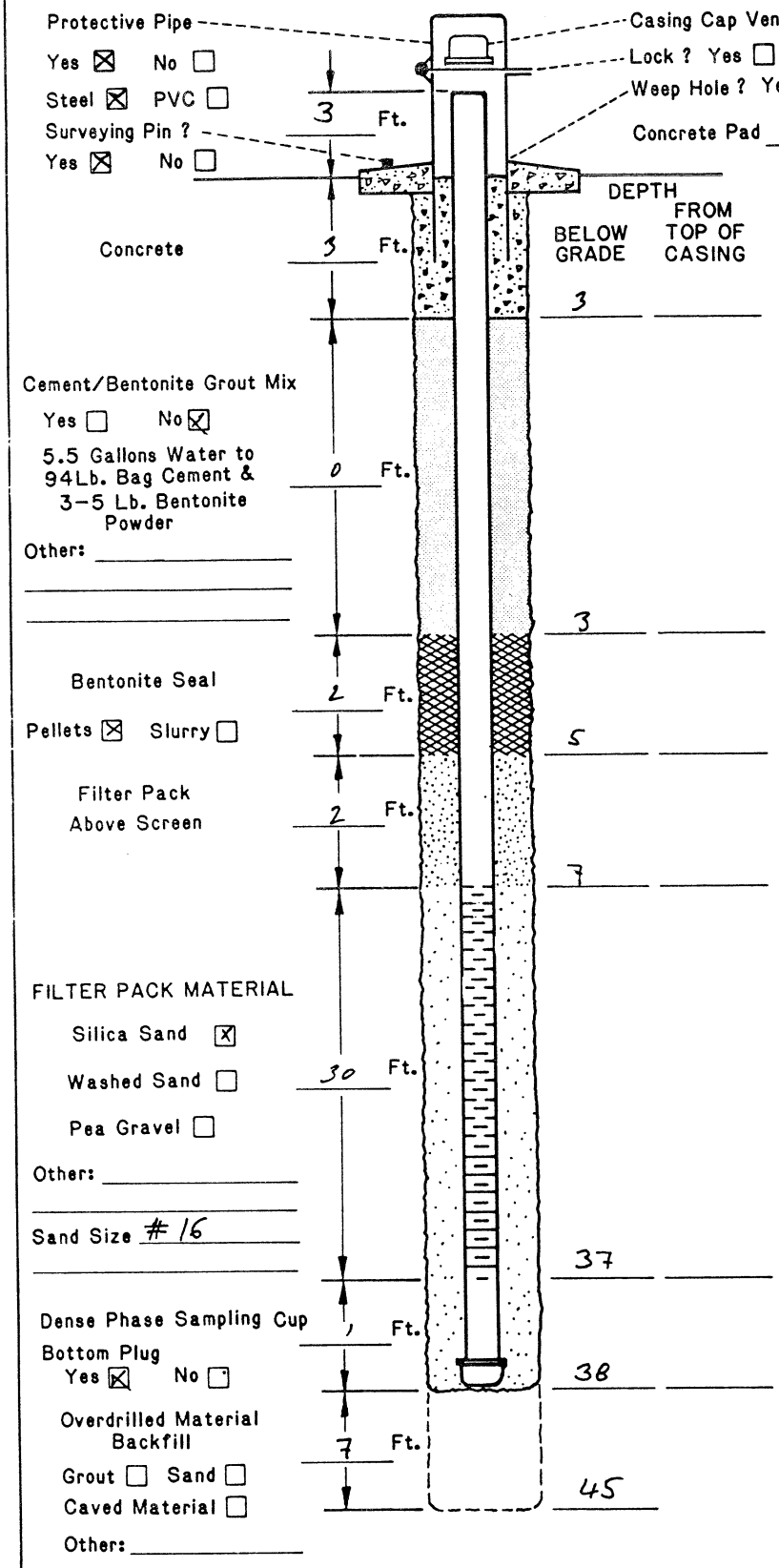

DRILLING INFORMATION:

1. Borehole Diameter= 10 3/4 Inches.
2. Were Drilling Additives Used ? Yes ☒ No ☐
   Revert ☐ Bentonite ☐ Water ☒
   Solid Auger ☒ Hollow Stem Auger ☐
3. Was Outer Steel Casing Used ? Yes ☐ No ☒
   Depth= _____ to _____ Feet.
4. Borehole Diameter for Outer Casing _____ Inches.

WELL CONSTRUCTION INFORMATION:

1. Type of Casing: PVC ☒ Galvanized ☐ Teflon ☐
   Stainless ☐ Other _____
2. Type of Casing Joints: Screw-Couple ☒ Glue-Couple ☐ Other _____
3. Type of Well Screen: PVC ☒ Galvanized ☐
   Stainless ☐ Teflon ☐ Other _____
4. Diameter of Casing and Well Screen:
   Casing 6 Inches, Screen 6 Inches.
5. Slot Size of Screen:
6. Type of Screen Perforation: Factory Slotted ☒
   Hacksaw ☐ Drilled ☐ Other _____
7. Installed Protector Pipe ~~w/Lock~~: Yes ☒ No ☐

WELL DEVELOPMENT INFORMATION:

1. How was Well Developed ? Bailing ☐ Pumping ☒
   Air Surging (Air or Nitrogen) ☒ Other _____
2. Time Spent on Well Development ?
   _____ / 1.5 Minutes/Hours
3. Approximate Water Volume Removed ? 150 Gallons
4. Water Clarity Before Development ? Clear ☐
   Turbid ☒ Opaque ☐
5. Water Clarity After Development ? Clear ☐
   Turbid ☐ Opaque ☒
6. Did Water have Odor ? Yes ☐ No ☒
   If Yes, Describe _____
7. Did Water have any Color ? Yes ☒ No ☐
   If Yes , Describe light brown

WATER LEVEL INFORMATION:

Water Level Summary (From Top of Casing)

During Drilling NA Ft. Date _____
Before Development 28.60 Ft. Date 10-15-93
After Development 28.50 Ft. Date 10-15-93

Driller/Firm Greg / Western Tec Grout Drill Rig Type _____ Date Installed 10-13-93

Drill Crew James + Rick Well No. I-N Kerr-McGee Hydrologist Jan FAJGL

SOIL BORING LOG KM—5655-A

KERR-McGEE CORPORATION Hydrology Dept. Engineering Services	KM SUBSIDIARY Chemical	LOCATION Henderson, NE	BORING NUMBER I-0

DEPTH IN FEET	LITHOLOGIC DESCRIPTION	GRAPHIC LOG	UNIFIED SOIL FIELD CLASS.	BLOWS PER FOOT	PID (ppm)	SOIL SAMPLE NO.	SOIL SAMPLE TYPE	SOIL SAMPLE DEPTH	SOIL SAMPLE REC.	REMARKS OR FIELD OBSERVATIONS
0	coarse and medium SAND, gravelly, silty		SM							Cuttings on the sieve described
5										
10										
15										
20										
25	some cobbles		SM GM							Rotary drilling from appx. 25'
30	light brown clayey silt started at 30'									
35			ML							
40	T.D. = 40'									

EXPLANATION

- ▼ Water Table (24 Hour)
- ▽ Water Table (Time of Boring)
- PID Photoionization Detection (ppm)
- NO. Identifies Sample by Number
- TYPE Sample Collection Method

SPLIT-BARREL; AUGER; ROCK CORE; THIN-WALLED TUBE; CONTINUOUS SAMPLER; NO RECOVERY

DEPTH Depth Top and Bottom of Sample
REC. Actual Length of Recovered Sample in Feet

GRAPHIC LOG LEGEND

CLAY; SILT; SAND; GRAVEL; SILTY CLAY; CLAYEY SILT; DEBRIS FILL; HIGHLY ORGANIC (PEAT); SANDY CLAY; CLAYEY SAND; _____; _____

DATE DRILLED: 10-13-93 | PAGE: 1 of 1

DRILLING METHOD: Rotary Mud - direct circulation

DRILLED BY: Western Technologies

LOGGED BY: J. F.

EXISTING GRADE ELEVATION (FT. AMSL)

LOCATION OR GRID COORDINATES

KERR-McGEE CORPORATION
HYDROLOGY DEPARTMENT
MONITORING WELL INSTALLATION DIAGRAM

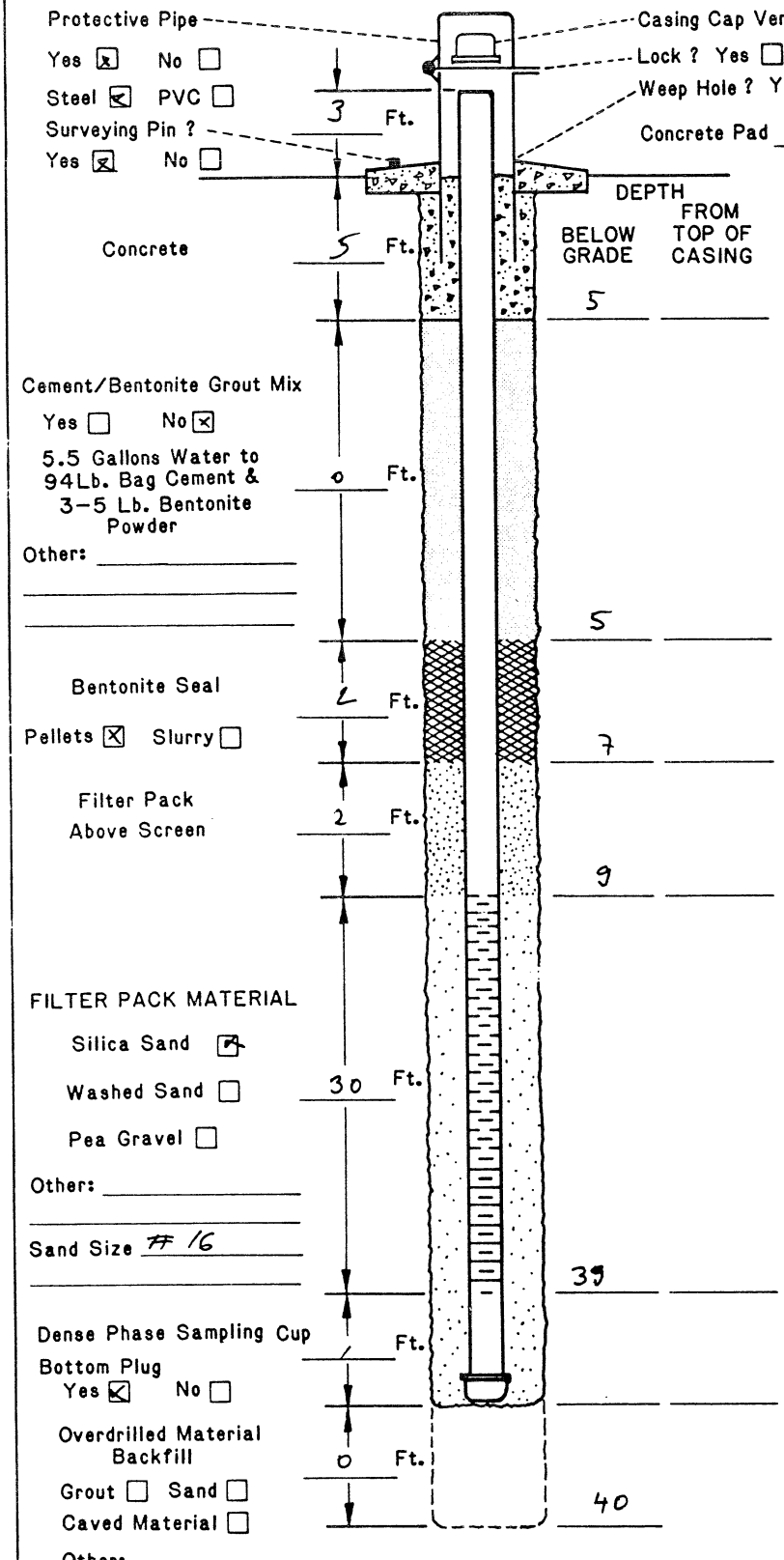

Concrete Pad 4 Ft. x 4 Ft. x 4 Inches

DRILLING INFORMATION:

1. Borehole Diameter= 10 3/4 Inches.
2. Were Drilling Additives Used ? Yes ☒ No ☐
   Revert ☐ Bentonite ☐ Water ☒
   Solid Auger ☒ Hollow Stem Auger ☐
3. Was Outer Steel Casing Used ? Yes ☐ No ☒
   Depth= _____ to _____ Feet.
4. Borehole Diameter for Outer Casing _____ Inches.

WELL CONSTRUCTION INFORMATION:

1. Type of Casing: PVC ☒ Galvanized ☐ Teflon ☐
   Stainless ☐ Other _____
2. Type of Casing Joints: Screw-Couple ☒ Glue-Couple ☐ Other _____
3. Type of Well Screen: PVC ☒ Galvanized ☐
   Stainless ☐ Teflon ☐ Other _____
4. Diameter of Casing and Well Screen:
   Casing 6 Inches, Screen 6 Inches.
5. Slot Size of Screen: 0.010
6. Type of Screen Perforation: Factory Slotted ☒
   Hacksaw ☐ Drilled ☐ Other _____
7. Installed Protector Pipe ~~w/Locks~~: Yes ☒ No ☐

WELL DEVELOPMENT INFORMATION:

1. How was Well Developed ? Bailing ☐ Pumping ☒
   Air Surging (Air or Nitrogen) ☒ Other _____
2. Time Spent on Well Development ?
   _____ / 1.5 Minutes/Hours
3. Approximate Water Volume Removed ? 120 Gallons
4. Water Clarity Before Development ? Clear ☐
   Turbid ☒ Opaque ☐
5. Water Clarity After Development ? Clear ☐
   Turbid ☐ Opaque ☒
6. Did Water have Odor ? Yes ☐ No ☒
   If Yes, Describe _____
7. Did Water have any Color ? Yes ☒ No ☐
   If Yes, Describe light brown

WATER LEVEL INFORMATION:

Water Level Summary (From Top of Casing)

During Drilling NA Ft. Date _____
Before Development 23.90 Ft. Date 10-13-93
After Development 28.01 Ft. Date 10-15-93

Driller/Firm Greg / Western Techn. Drill Rig Type _____ Date Installed 10-13-93

Drill Crew James + Rick Well No. I-0 Kerr-McGee Hydrologist Jan FAJGL

SOIL BORING LOG KM-5655-B

KERR-McGEE CORPORATION Hydrology Dept. - S&EA Division	KM SUBSIDIARY KMC - LLC	LOCATION HENDERSON NV	BORING NUMBER I-P

DEPTH IN FEET	LITHOLOGIC DESCRIPTION	GRAPHIC LOG	UNIFIED SOIL FIELD CLASS.	BLOWS PER 6"	PID (ppm)	SOIL SAMPLE NO.	SOIL SAMPLE TYPE	SOIL SAMPLE DEPTH	SOIL SAMPLE REC.	REMARKS OR FIELD OBSERVATIONS
0	SILTY SAND REDDISH BROWN									AUGER 12" HOLE
	SM CLAY M-CRS GR.									
5	WELL GRADED GRAVELS									
			SM							
10	BRN BROWN		GM							
15										
20	SAND BROWN CRS TO VERY CRS TR GRAVEL									
25	GRAVEL 2 IN. +									V. HARD 25-27
30										
	33' MUDDY CREEK									RUN IN HOLE W/ 8" AUGER TO TD REAM W/ 12"
35	CLAY BROWN SILTY SOFT SLI PLASTIC WET HOMOG.		CL							
40	→45									TD 45'

EXPLANATION

- ▼ Water Table (24 Hour)
- ▽ Water Table (Time of Boring)
- PID Photoionization Detection (ppm)
- NO. Identifies Sample by Number
- TYPE Sample Collection Method

SPLIT-BARREL | AUGER | ROCK CORE | THIN-WALLED TUBE | CONTINUOUS SAMPLER | NO RECOVERY

DEPTH Depth Top and Bottom of Sample
REC. Actual Length of Recovered Sample in Feet

GRAPHIC LOG LEGEND

CLAY | DEBRIS FILL | SILT | HIGHLY ORGANIC (PEAT) | SAND | SANDY CLAY | GRAVEL | CLAYEY SAND | SILTY CLAY | _____ | CLAYEY SILT | _____

DATE DRILLED: 3/3/98 | PAGE: 1 of 1
DRILLING METHOD: HSA
DRILLED BY: WEBER ENVIRONMENTAL
LOGGED BY: J. CRAWFORD
EXISTING GRADE ELEVATION (FT. AMSL):
LOCATION OR GRID COORDINATES:

KERR-McGEE CORPORATION
HYDROLOGY DEPARTMENT
MONITORING WELL INSTALLATION DIAGRAM

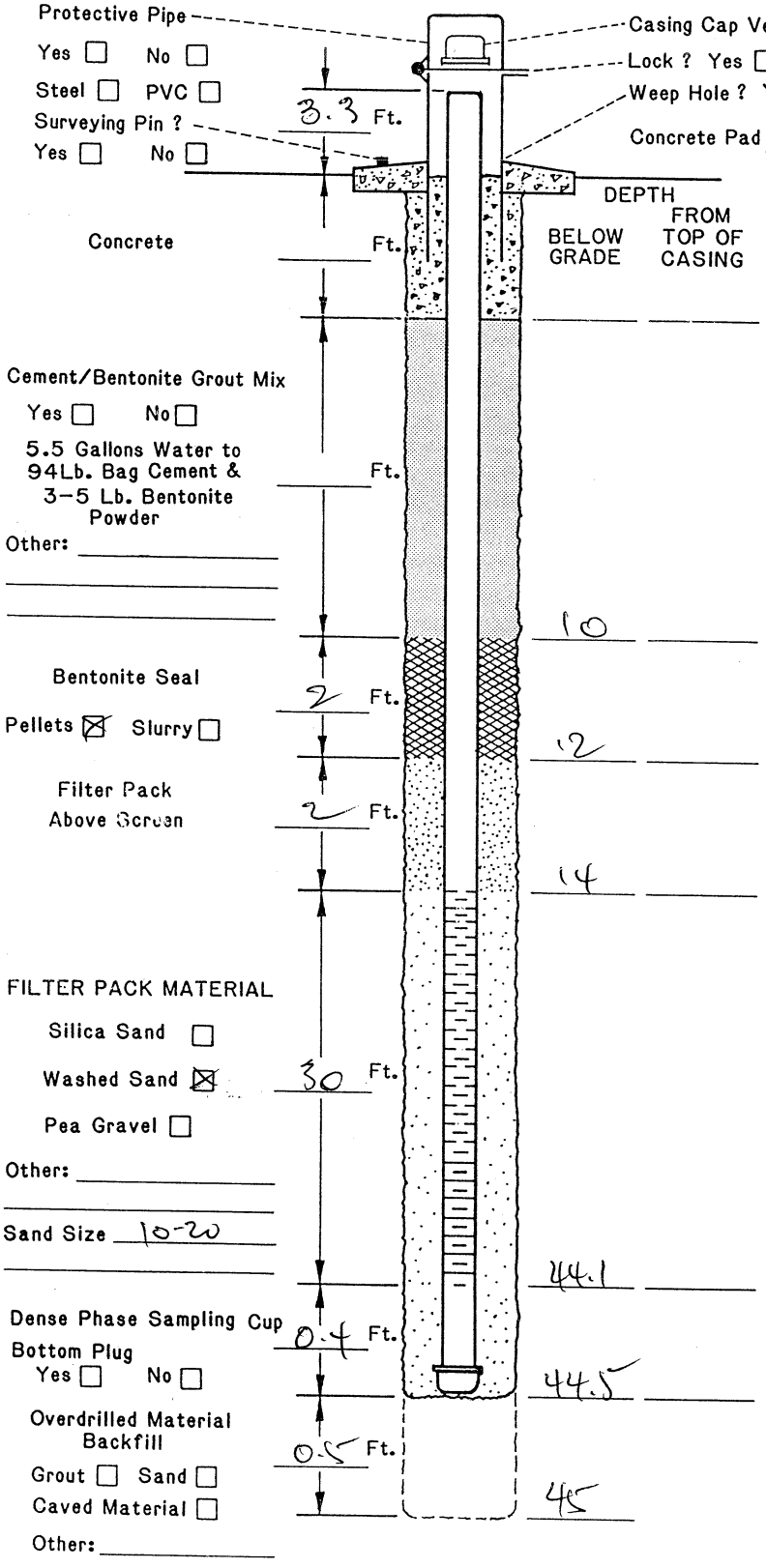

DRILLING INFORMATION:

1. Borehole Diameter= 12 Inches.
2. Were Drilling Additives Used ? Yes ☐ No ☒
   Revert ☐ Bentonite ☐ Water ☐
   Solid Auger ☐ Hollow Stem Auger ☒
3. Was Outer Steel Casing Used ? Yes ☐ No ☒
   Depth= _____ to _____ Feet.
4. Borehole Diameter for Outer Casing _____ Inches.

WELL CONSTRUCTION INFORMATION:

1. Type of Casing: PVC ☒ Galvanized ☐ Teflon ☐
   Stainless ☐ Other _____
2. Type of Casing Joints: Screw-Couple ☒ Glue-Couple ☐ Other _____
3. Type of Well Screen: PVC ☒ Galvanized ☐
   Stainless ☐ Teflon ☐ Other _____
4. Diameter of Casing and Well Screen:
   Casing 4 Inches, Screen _____ Inches.
5. Slot Size of Screen:
6. Type of Screen Perforation: Factory Slotted ☐
   Hacksaw ☐ Drilled ☐ Other _____
7. Installed Protector Pipe w/Lock: Yes ☐ No ☐

WELL DEVELOPMENT INFORMATION:

1. How was Well Developed ? Bailing ☐ Pumping ☐
   Air Surging (Air or Nitrogen) ☐ Other _____
2. Time Spent on Well Development ?
   _____ / _____ Minutes/Hours
3. Approximate Water Volume Removed ? _____ Gallons
4. Water Clarity Before Development ? Clear ☐
   Turbid ☐ Opaque ☐
5. Water Clarity After Development ? Clear ☐
   Turbid ☐ Opaque ☐
6. Did Water have Odor ? Yes ☐ No ☐
   If Yes, Describe _____
7. Did Water have any Color ? Yes ☐ No ☐
   If Yes , Describe _____

WATER LEVEL INFORMATION:

Water Level Summary (From Top of Casing)

During Drilling _____ Ft. Date _____
Before Development _____ Ft. Date _____
After Development _____ Ft. Date _____

Driller/Firm WEBER ENVIRONMENTAL Drill Rig Type MOBILE B-61 Date Installed 3/4/98

Drill Crew L. ROBERTSON Well No. I-P Kerr-McGee Hydrologist J. CRAWFORD

SOIL BORING LOG KM-5655-B

KERR-McGEE CORPORATION Hydrology Dept. - S&EA Division	KM SUBSIDIARY KMLC-LLC	LOCATION HENDERSON NJ	BORING NUMBER I-Q

DEPTH IN FEET	LITHOLOGIC DESCRIPTION	GRAPHIC LOG	UNIFIED SOIL FIELD CLASS.	BLOWS PER 6"	PID (ppm)	SOIL SAMPLE NO.	SOIL SAMPLE TYPE	SOIL SAMPLE DEPTH	SOIL SAMPLE REC.	REMARKS OR FIELD OBSERVATIONS
0	GRAVELLY BROWN SAND CRS - V CRS GR WELL GRADED									
5			SM							
10	SAND AAB BCMG CLAYEY IN PART SOFT									
15										
20										
25			SM/CL							
	MUDDY CREEK 28'									— 28' MUDDY CREEK
30	SILTY CLAY RD BRN WET HOMOG. V. SLI PLAST.		CL							
35	INC PLASTIC CLAY									
40										TD 40'

EXPLANATION

- ▼ Water Table (24 Hour)
- ▽ Water Table (Time of Boring)
- PID Photoionization Detection (ppm)
- NO. Identifies Sample by Number
- TYPE Sample Collection Method

SPLIT-BARREL; AUGER; ROCK CORE; THIN-WALLED TUBE; CONTINUOUS SAMPLER; NO RECOVERY

DEPTH Depth Top and Bottom of Sample
REC. Actual Length of Recovered Sample in Feet

GRAPHIC LOG LEGEND

CLAY; SILT; SAND; GRAVEL; SILTY CLAY; CLAYEY SILT; DEBRIS FILL; HIGHLY ORGANIC (PEAT); SANDY CLAY; CLAYEY SAND; _____; _____

DATE DRILLED	PAGE
3/4/98	1 of 1
DRILLING METHOD: HSA	
DRILLED BY: WEBER	
LOGGED BY: J. CRAWFORD	
EXISTING GRADE ELEVATION (FT. AMSL):	
LOCATION OR GRID COORDINATES:	

KERR-McGEE CORPORATION
HYDROLOGY DEPARTMENT
MONITORING WELL INSTALLATION DIAGRAM

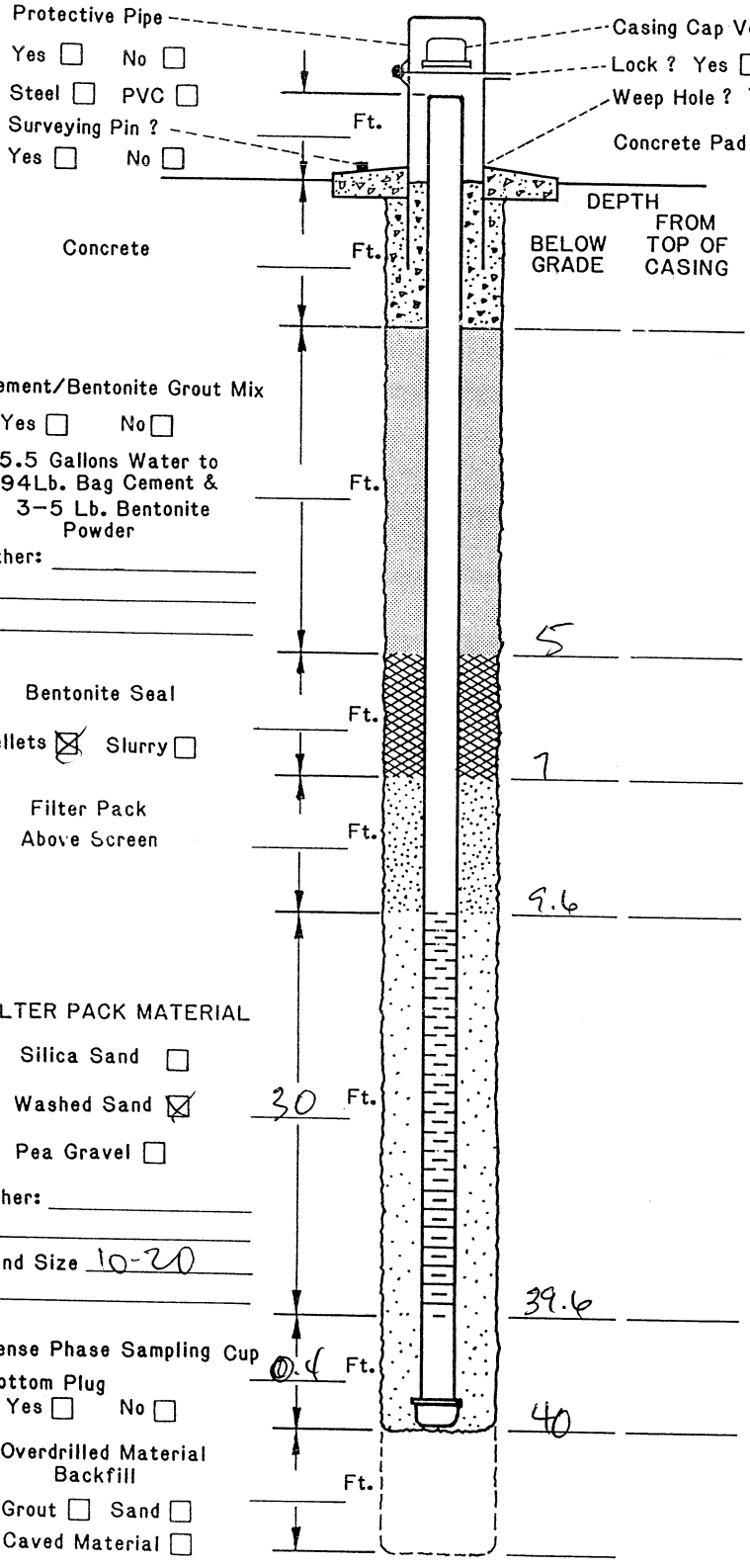

DRILLING INFORMATION:

1. Borehole Diameter= 12 Inches.
2. Were Drilling Additives Used ? Yes ☐ No ☒
   Revert ☐ Bentonite ☐ Water ☐
   Solid Auger ☐ Hollow Stem Auger ☒
3. Was Outer Steel Casing Used ? Yes ☐ No ☒
   Depth= _____ to _____ Feet.
4. Borehole Diameter for Outer Casing _____ Inches.

WELL CONSTRUCTION INFORMATION:

1. Type of Casing: PVC ☒ Galvanized ☐ Teflon ☐
   Stainless ☐ Other _____
2. Type of Casing Joints: Screw-Couple ☒ Glue-Couple ☐ Other _____
3. Type of Well Screen: PVC ☒ Galvanized ☐
   Stainless ☐ Teflon ☐ Other _____
4. Diameter of Casing and Well Screen:
   Casing 6 Inches, Screen 6 Inches.
5. Slot Size of Screen: .020
6. Type of Screen Perforation: Factory Slotted ☒
   Hacksaw ☐ Drilled ☐ Other _____
7. Installed Protector Pipe w/Lock: Yes ☐ No ☐

WELL DEVELOPMENT INFORMATION:

1. How was Well Developed ? Bailing ☐ Pumping ☒
   Air Surging (Air or Nitrogen) ☐ Other _____
2. Time Spent on Well Development ?
   _____ / _____ Minutes/Hours
3. Approximate Water Volume Removed ? _____ Gallons
4. Water Clarity Before Development ? Clear ☐
   Turbid ☐ Opaque ☐
5. Water Clarity After Development ? Clear ☐
   Turbid ☐ Opaque ☐
6. Did Water have Oder ? Yes ☐ No ☐
   If Yes, Describe _____
7. Did Water have any Color ? Yes ☐ No ☐
   If Yes , Describe _____

WATER LEVEL INFORMATION:

Water Level Summary (From Top of Casing)

During Drilling _____ Ft. Date _____
Before Development 12 Ft. Date 3-4-98
After Development _____ Ft. Date _____

Driller/Firm WEBER ENVIRONMENTAL Drill Rig Type MOBILE B-61 Date Installed 3/4/98
Drill Crew L. ROBERTSON, B. JOHNSON Well No. I-Q Kerr-McGee Hydrologist J. CRAWFORD

SOIL BORING LOG KM-5655-B

KERR-McGEE CORPORATION Hydrology Dept. - S&EA Division	KM SUBSIDIARY KMCLLC	LOCATION HENDERSON, NV.	BORING NUMBER I-R

DEPTH IN FEET	LITHOLOGIC DESCRIPTION	GRAPHIC LOG	UNIFIED SOIL FIELD CLASS.	BLOWS PER 6"	PID (ppm)	SOIL SAMPLE NO.	SOIL SAMPLE TYPE	SOIL SAMPLE DEPTH	SOIL SAMPLE REC.	REMARKS OR FIELD OBSERVATIONS
0	SAND; SILTY SAND W/ OCC. TO COMMON GRAVEL, LT. TAN-BROWN; V. SLI. MOIST; WELL-GRADED		SM-GM							
5										
10	SAND AS ABOVE; GRAVELLY ZONE @ 9.5-11'									
15										
20	SAND AS ABOVE; BECOMING MOIST		SM-GM							
25	GRAVEL COMMON 24-27.5'									
27.5	CLAYEY SILT; FINE SAND COMMON; LT. BROWN; SATURATED, MOD. WELL-GRADED; MOD. PLASTIC		ML			1	X	27.5-29	1.3'	
30										
35										
40										

EXPLANATION

- ▼ Water Table (24 Hour)
- ▽ Water Table (Time of Boring)
- PID Photoionization Detection (ppm)
- NO. Identifies Sample by Number
- TYPE Sample Collection Method
- SPLIT-BARREL
- AUGER
- ROCK CORE
- THIN-WALLED TUBE
- CONTINUOUS SAMPLER
- NO RECOVERY
- DEPTH Depth Top and Bottom of Sample
- REC. Actual Length of Recovered Sample in Feet

GRAPHIC LOG LEGEND

- CLAY
- SILT
- SAND
- GRAVEL
- SILTY CLAY
- CLAYEY SILT
- DEBRIS FILL
- HIGHLY ORGANIC (PEAT)
- SANDY CLAY
- CLAYEY SAND
- _____
- _____

DATE DRILLED	PAGE
2/15/99	1 of 2
DRILLING METHOD: HSA	
DRILLED BY: COMPLIANCE DRLG.	
LOGGED BY: T. REED	
EXISTING GRADE ELEVATION (FT. AMSL):	
LOCATION OR GRID COORDINATES:	

SOIL BORING LOG KM-5655-B

KERR-McGEE CORPORATION Hydrology Dept. - S&EA Division	KM SUBSIDIARY KMCLLC	LOCATION HENDERSON, NV	BORING NUMBER I-R (CONT.)

DEPTH IN FEET	LITHOLOGIC DESCRIPTION	GRAPHIC LOG	UNIFIED SOIL FIELD CLASS.	BLOWS PER 6"	PID (ppm)	SOIL SAMPLE NO.	SOIL SAMPLE TYPE	SOIL SAMPLE DEPTH	SOIL SAMPLE REC.	REMARKS OR FIELD OBSERVATIONS
40	CLAYEY-SILT WITH OCC. V. FINE SAND; LT. BRAWN; SATURATED; MOD. PLASTIC		ML							
45										
50						2	X	50 51.5	1.5'	
55	TD 55'					3	X	55 56.5	1.5'	

EXPLANATION

- ▼ Water Table (24 Hour)
- ▽ Water Table (Time of Boring)
- PID Photoionization Detection (ppm)
- NO. Identifies Sample by Number
- TYPE Sample Collection Method
- SPLIT-BARREL
- AUGER
- ROCK CORE
- THIN-WALLED TUBE
- CONTINUOUS SAMPLER
- NO RECOVERY
- DEPTH Depth Top and Bottom of Sample
- REC. Actual Length of Recovered Sample in Feet

GRAPHIC LOG LEGEND

- CLAY
- SILT
- SAND
- GRAVEL
- SILTY CLAY
- CLAYEY SILT
- DEBRIS FILL
- HIGHLY ORGANIC (PEAT)
- SANDY CLAY
- CLAYEY SAND
- _____
- _____

DATE DRILLED	PAGE
2/15/99	2 of 2

DRILLING METHOD: HSA

DRILLED BY: COMPLIANCE DRLG.

LOGGED BY: T. REED

EXISTING GRADE ELEVATION (FT. AMSL)

LOCATION OR GRID COORDINATES

KERR-McGEE CORPORATION
HYDROLOGY DEPARTMENT
MONITORING WELL INSTALLATION DIAGRAM

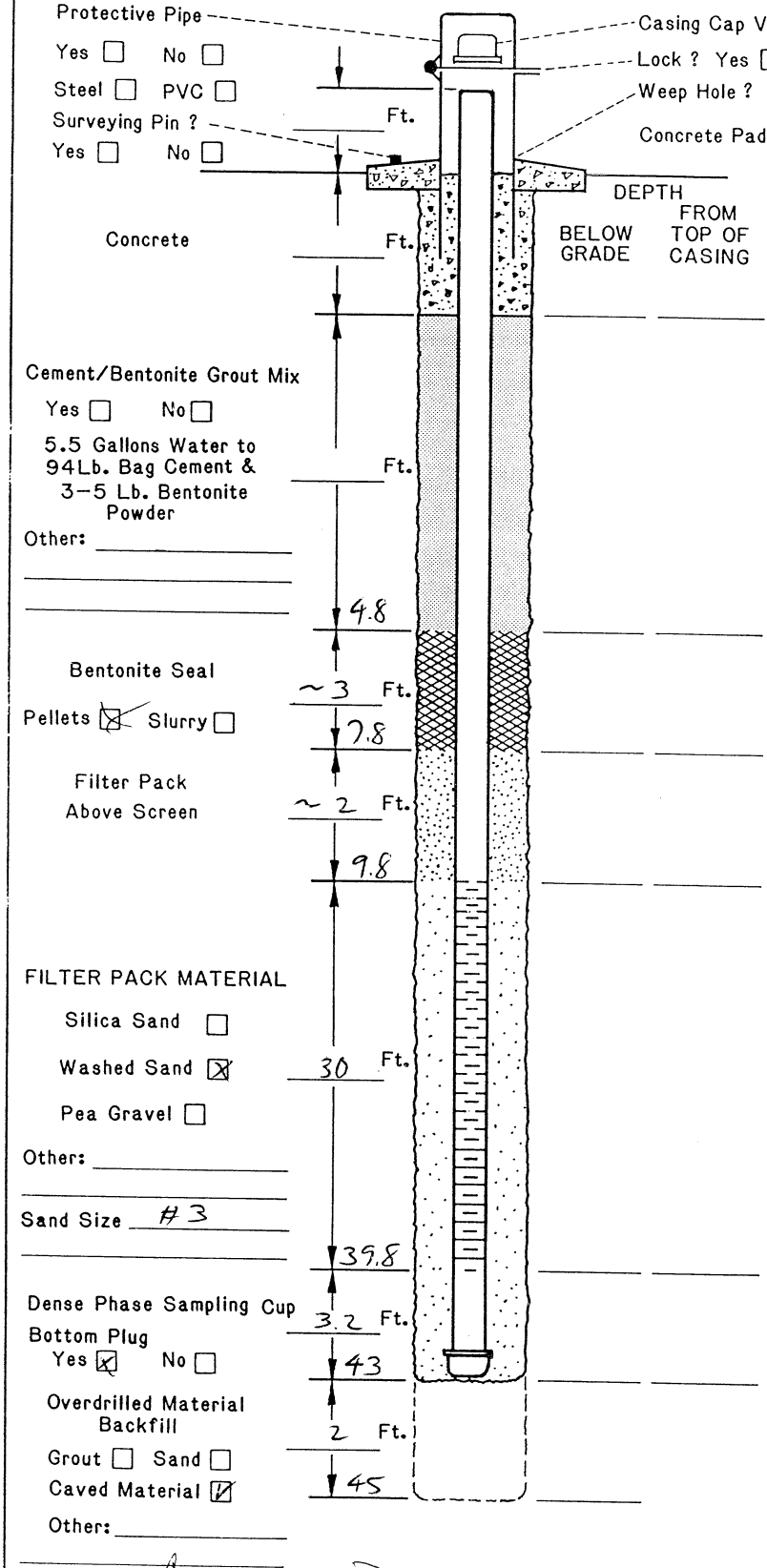

DRILLING INFORMATION:

1. Borehole Diameter= 10.5 Inches.
2. Were Drilling Additives Used ? Yes ☒ No ☐
   Revert ☐ Bentonite ☐ Water ☐
   Solid Auger ☐ Hollow Stem Auger ☒
3. Was Outer Steel Casing Used ? Yes ☐ No ☐
   Depth= _____ to _____ Feet.
4. Borehole Diameter for Outer Casing _____ Inches.

WELL CONSTRUCTION INFORMATION:

1. Type of Casing: PVC ☒ Galvanized ☐ Teflon ☐
   Stainless ☐ Other _____
2. Type of Casing Joints: Screw-Couple ☒ Glue-Couple ☐ Other _____
3. Type of Well Screen: PVC ☒ Galvanized ☐
   Stainless ☐ Teflon ☐ Other _____
4. Diameter of Casing and Well Screen:
   Casing 6 Inches, Screen 6 Inches.
5. Slot Size of Screen: .020
6. Type of Screen Perforation: Factory Slotted ☒
   Hacksaw ☐ Drilled ☐ Other CONTINUOUS
7. Installed Protector Pipe w/Lock: Yes ☐ No ☐

WELL DEVELOPMENT INFORMATION:

1. How was Well Developed ? Bailing ☐ Pumping ☐
   Air Surging (Air or Nitrogen) ☐ Other SURGE BLOCK
2. Time Spent on Well Development ?
   _____/_____ Minutes/Hours
3. Approximate Water Volume Removed ? _____ Gallons
4. Water Clarity Before Development ? Clear ☐
   Turbid ☐ Opaque ☐
5. Water Clarity After Development ? Clear ☐
   Turbid ☐ Opaque ☐
6. Did Water have Odor ? Yes ☐ No ☐
   If Yes, Describe _____
7. Did Water have any Color ? Yes ☐ No ☐
   If Yes , Describe _____

WATER LEVEL INFORMATION:

Water Level Summary (From Top of Casing)

During Drilling _____ Ft. Date _____
Before Development _____ Ft. Date _____
After Development _____ Ft. Date _____

Driller/Firm COMPLIANCE DRILLING Drill Rig Type MOBILE B-59 Date Installed 2/19/99

Drill Crew LEE ROBERTSON Well No. I-R Kerr-McGee Hydrologist J. CRAWFORD

SOIL BORING LOG KM-5655-B

KERR-McGEE CORPORATION Hydrology Dept. - S&EA Division	KM SUBSIDIARY KMCLLC	LOCATION HENDERSON, NV	BORING NUMBER I-5

DEPTH IN FEET	LITHOLOGIC DESCRIPTION	GRAPHIC LOG	UNIFIED SOIL FIELD CLASS.	BLOWS PER 6"	PID (ppm)	SOIL SAMPLE NO.	SOIL SAMPLE TYPE	SOIL SAMPLE DEPTH	SOIL SAMPLE REC.	REMARKS OR FIELD OBSERVATIONS
0	SILTY SAND / SAND, OCC. TO COMMON GRAVEL; V. SLI. MOIST; LT. TAN-BROWN, WELL-GRADED		SM-GM							
5										
10										
15	SAND AS ABOVE, GRAVEL ZONE @ 17-20'									
20			SM-GM							
25	HAND DRILLING FROM 22-26.5' - GRAVEL W/ CALICHE?									
26.5	CLAYEY SILT W/ OCC. V. FINE SAND; LT. BROWN, MOIST TO SATURATED; MOD. PLASTIC		ML							
30										
35										
40										

EXPLANATION

- ▼ Water Table (24 Hour)
- ▽ Water Table (Time of Boring)
- PID Photoionization Detection (ppm)
- NO. Identifies Sample by Number
- TYPE Sample Collection Method

SPLIT-BARREL; AUGER; ROCK CORE; THIN-WALLED TUBE; CONTINUOUS SAMPLER; NO RECOVERY

DEPTH Depth Top and Bottom of Sample
REC. Actual Length of Recovered Sample in Feet

GRAPHIC LOG LEGEND

CLAY; SILT; SAND; GRAVEL; SILTY CLAY; CLAYEY SILT; DEBRIS FILL; HIGHLY ORGANIC (PEAT); SANDY CLAY; CLAYEY SAND; _____; _____

DATE DRILLED	PAGE
2/15/99	1 of 2
DRILLING METHOD: HSA	
DRILLED BY: COMPLIANCE DRLG.	
LOGGED BY: T. REED	
EXISTING GRADE ELEVATION (FT. AMSL):	
LOCATION OR GRID COORDINATES:	

SOIL BORING LOG KM-5655-B

KERR-McGEE CORPORATION Hydrology Dept. - S&EA Division	KM SUBSIDIARY KMCLLC	LOCATION HENDERSON, NV	BORING NUMBER I-5 (CONT.)

DEPTH IN FEET	LITHOLOGIC DESCRIPTION	GRAPHIC LOG	UNIFIED SOIL FIELD CLASS.	BLOWS PER 6"	PID (ppm)	SOIL SAMPLE NO.	SOIL SAMPLE TYPE	SOIL SAMPLE DEPTH	SOIL SAMPLE REC.	REMARKS OR FIELD OBSERVATIONS
40	CLAYEY SILT, LT. BROWN; SATURATED; PLASTIC TO V. PLASTIC		ML							
45	TD 45'					1	X	45 46.5	1.2'	

EXPLANATION

- ▼ Water Table (24 Hour)
- ▽ Water Table (Time of Boring)
- PID Photoionization Detection (ppm)
- NO. Identifies Sample by Number
- TYPE Sample Collection Method

SPLIT-BARREL; AUGER; ROCK CORE; THIN-WALLED TUBE; CONTINUOUS SAMPLER; NO RECOVERY

DEPTH Depth Top and Bottom of Sample
REC. Actual Length of Recovered Sample in Feet

GRAPHIC LOG LEGEND

CLAY; SILT; SAND; GRAVEL; SILTY CLAY; CLAYEY SILT; DEBRIS FILL; HIGHLY ORGANIC (PEAT); SANDY CLAY; CLAYEY SAND; _____; _____

DATE DRILLED	PAGE
2/15/99	2 of 2

DRILLING METHOD: HSA

DRILLED BY: COMPLIANCE DRLG.

LOGGED BY: T. REED

EXISTING GRADE ELEVATION (FT. AMSL):

LOCATION OR GRID COORDINATES:

KERR-McGEE CORPORATION
HYDROLOGY DEPARTMENT
MONITORING WELL INSTALLATION DIAGRAM

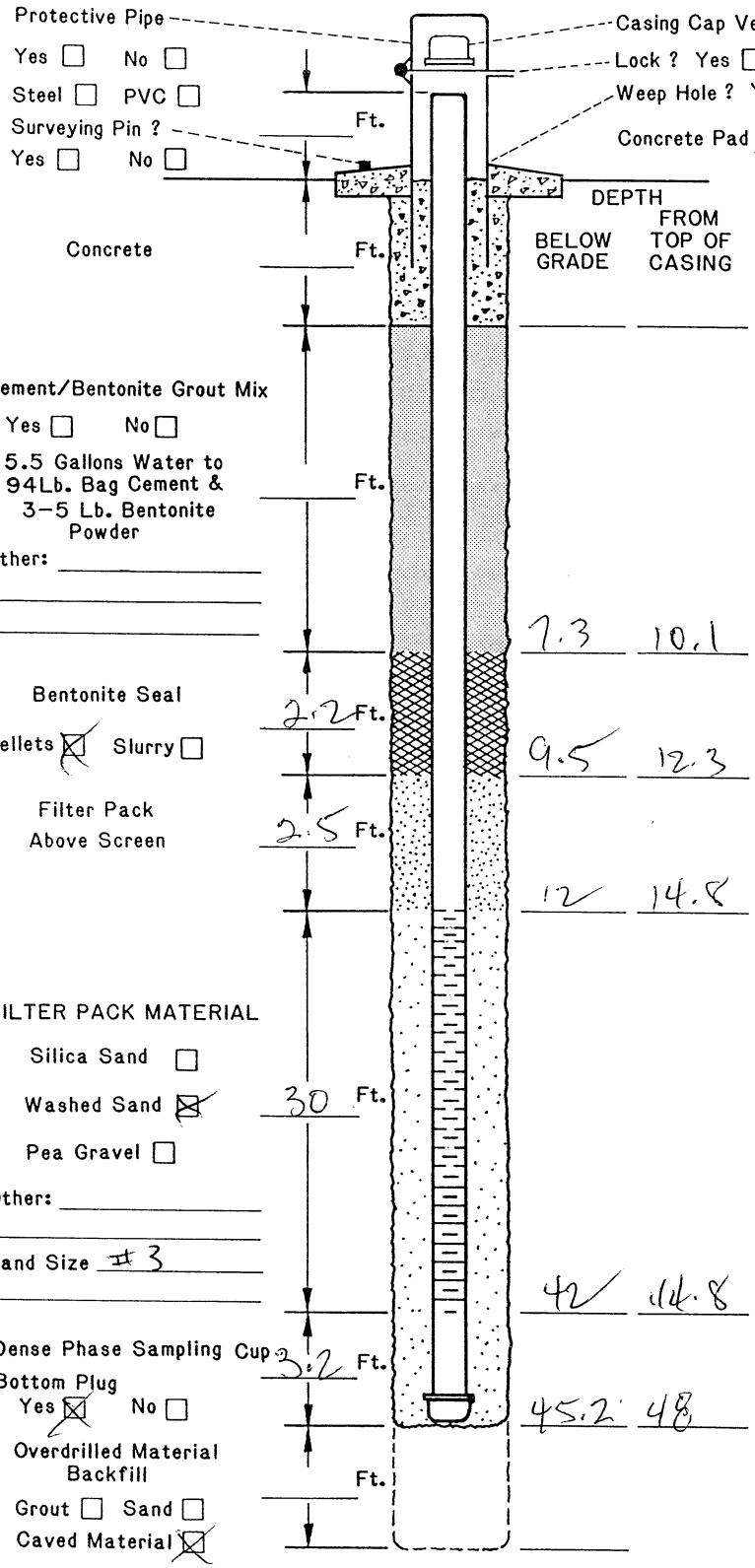

DRILLING INFORMATION:

1. Borehole Diameter= _____ Inches.
2. Were Drilling Additives Used ? Yes ☒ No ☐
   Revert ☐ Bentonite ☐ Water ☒
   Solid Auger ☐ Hollow Stem Auger ☒
3. Was Outer Steel Casing Used ? Yes ☐ No ☐
   Depth= _____ to _____ Feet.
4. Borehole Diameter for Outer Casing _____ Inches.

WELL CONSTRUCTION INFORMATION:

1. Type of Casing: PVC ☒ Galvanized ☐ Teflon ☐
   Stainless ☐ Other _____
2. Type of Casing Joints: Screw-Couple ☒ Glue-Couple ☐ Other _____
3. Type of Well Screen: PVC ☒ Galvanized ☐
   Stainless ☐ Teflon ☐ Other _____
4. Diameter of Casing and Well Screen:
   Casing 6 Inches, Screen 6 Inches.
5. Slot Size of Screen: .020
6. Type of Screen Perforation: Factory Slotted ☒
   Hacksaw ☐ Drilled ☐ Other CONTINUOUS
7. Installed Protector Pipe w/Lock: Yes ☐ No ☐

WELL DEVELOPMENT INFORMATION:

1. How was Well Developed ? Bailing ☐ Pumping ☐
   Air Surging (Air or Nitrogen) ☐ Other SURGE BLOCK
2. Time Spent on Well Development ?
   _____/_____ Minutes/Hours
3. Approximate Water Volume Removed ? _____ Gallons
4. Water Clarity Before Development ? Clear ☐
   Turbid ☐ Opaque ☐
5. Water Clarity After Development ? Clear ☐
   Turbid ☐ Opaque ☐
6. Did Water have Odor ? Yes ☐ No ☐
   If Yes, Describe _____
7. Did Water have any Color ? Yes ☐ No ☐
   If Yes , Describe _____

WATER LEVEL INFORMATION:

Water Level Summary (From Top of Casing)

During Drilling _____ Ft. Date _____
Before Development _____ Ft. Date _____
After Development _____ Ft. Date _____

Driller/Firm EQUIPMENT DRILLING Drill Rig Type MOBILE B-59 Date Installed 2/19/99
Drill Crew LEE ROBERTSON Well No. I-5 Kerr-McGee Hydrologist T. CRAWFORD

SOIL BORING LOG KM-5655-B

KERR-McGEE CORPORATION Hydrology Dept. - S&EA Division	KM SUBSIDIARY KM CLLC	LOCATION HENDERSON, NV.	BORING NUMBER I - T

DEPTH IN FEET	LITHOLOGIC DESCRIPTION	GRAPHIC LOG	UNIFIED SOIL FIELD CLASS.	BLOWS PER 6"	PID (ppm)	SOIL SAMPLE NO.	SOIL SAMPLE TYPE	SOIL SAMPLE DEPTH	SOIL SAMPLE REC.	REMARKS OR FIELD OBSERVATIONS
5			SM							
10										
15	GRAVEL ZONE - 16-20'		SM-GM							
20	GRAVEL ZONE 22-27'									
25	HARD DRILLING FROM 27-31'; SILTY SAND W/ WHITE STREAKS (CALICHE); INDURATED; SLI. MOIST; OCC. GRAVEL									
30						1	X	30 31.5	1.5'	
31	CLAYEY SILT; LT. BROWN; MOIST TO SATURATED		ML							
35										

EXPLANATION

- ▼ Water Table (24 Hour)
- ▽ Water Table (Time of Boring)
- PID Photoionization Detection (ppm)
- NO. Identifies Sample by Number
- TYPE Sample Collection Method

SPLIT-BARREL | AUGER | ROCK CORE | THIN-WALLED TUBE | CONTINUOUS SAMPLER | NO RECOVERY

DEPTH Depth Top and Bottom of Sample
REC. Actual Length of Recovered Sample in Feet

GRAPHIC LOG LEGEND

CLAY | DEBRIS FILL | SILT | HIGHLY ORGANIC (PEAT) | SAND | SANDY CLAY | GRAVEL | CLAYEY SAND | SILTY CLAY | _____ | CLAYEY SILT | _____

DATE DRILLED: 2/16/99
PAGE: 1 of 2
DRILLING METHOD: HSA
DRILLED BY: COMPLIANCE DRLG.
LOGGED BY: T. REED
EXISTING GRADE ELEVATION (FT. AMSL):
LOCATION OR GRID COORDINATES:

SOIL BORING LOG KM-5655-B

KERR-McGEE CORPORATION Hydrology Dept. - S&EA Division	KM SUBSIDIARY KMCLLC	LOCATION HENDERSON, NV.	BORING NUMBER I-T

DEPTH IN FEET	LITHOLOGIC DESCRIPTION	GRAPHIC LOG	UNIFIED SOIL FIELD CLASS.	BLOWS PER 6"	PID (ppm)	SOIL SAMPLE NO.	SOIL SAMPLE TYPE	SOIL SAMPLE DEPTH	SOIL SAMPLE REC.	REMARKS OR FIELD OBSERVATIONS
40										
	CLAYEY SILT AS ABOVE									
45			ML							
50										
55	CLAYEY SILT AS ABOVE					2	X	55 56.5	1.5'	
	CLAYEY SILT W/ OCC. WHITE CALICHE STREAKS; OCC. GYPSUM CRYSTALS; LT. BROWN; SATURATED		ML							
60	TD 60'					3	X	60' 61.5'	1.1'	

EXPLANATION

- ▼ Water Table (24 Hour)
- ▽ Water Table (Time of Boring)
- PID Photoionization Detection (ppm)
- NO. Identifies Sample by Number
- TYPE Sample Collection Method

SPLIT-BARREL; AUGER; ROCK CORE; THIN-WALLED TUBE; CONTINUOUS SAMPLER; NO RECOVERY

DEPTH Depth Top and Bottom of Sample
REC. Actual Length of Recovered Sample in Feet

GRAPHIC LOG LEGEND

CLAY; SILT; SAND; GRAVEL; SILTY CLAY; CLAYEY SILT; DEBRIS FILL; HIGHLY ORGANIC (PEAT); SANDY CLAY; CLAYEY SAND; _____; _____

DATE DRILLED	PAGE
2/16/99	2 of 2

DRILLING METHOD: HSA

DRILLED BY: COMPLIANCE DRLG.

LOGGED BY: T. REED

EXISTING GRADE ELEVATION (FT. AMSL)

LOCATION OR GRID COORDINATES

KERR-McGEE CORPORATION
HYDROLOGY DEPARTMENT
MONITORING WELL INSTALLATION DIAGRAM

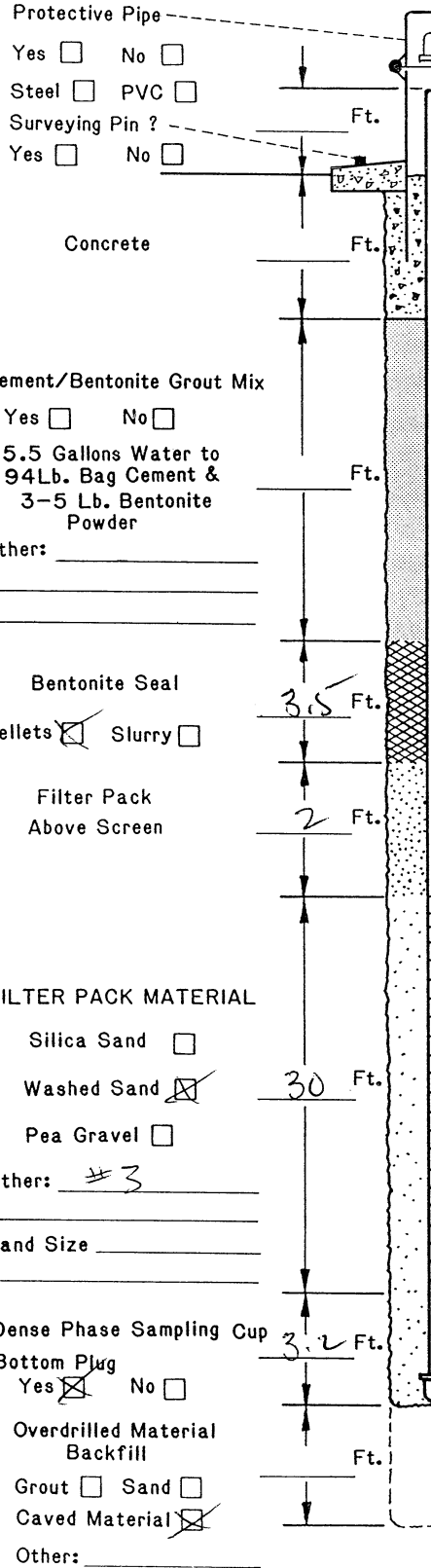

Casing Cap Vent ? Yes ☐ No ☐

Lock ? Yes ☐ No ☐

Weep Hole ? Yes ☐ No ☐

Concrete Pad _____ Ft. x _____ Ft. x _____ Inches

	DEPTH BELOW GRADE	DEPTH FROM TOP OF CASING
	6.5	9.3
	10	12.8
	12	14.8
	42	44.8
	45.17	48.0

DRILLING INFORMATION:

1. Borehole Diameter= 10.5 Inches.
2. Were Drilling Additives Used ? Yes ☐ No ☐
   Revert ☐ Bentonite ☐ Water ☐
   Solid Auger ☐ Hollow Stem Auger ☒
3. Was Outer Steel Casing Used ? Yes ☐ No ☐
   Depth= _____ to _____ Feet.
4. Borehole Diameter for Outer Casing _____ Inches.

WELL CONSTRUCTION INFORMATION:

1. Type of Casing: PVC ☒ Galvanized ☐ Teflon ☐
   Stainless ☐ Other _____
2. Type of Casing Joints: Screw-Couple ☒ Glue-Couple ☐ Other _____
3. Type of Well Screen: PVC ☒ Galvanized ☐
   Stainless ☐ Teflon ☐ Other _____
4. Diameter of Casing and Well Screen:
   Casing 6 Inches, Screen 6 Inches.
5. Slot Size of Screen: .020
6. Type of Screen Perforation: Factory Slotted ☐
   Hacksaw ☐ Drilled ☐ Other CONTINUOUS
7. Installed Protector Pipe w/Lock: Yes ☐ No ☐

WELL DEVELOPMENT INFORMATION:

1. How was Well Developed ? Bailing ☐ Pumping ☐
   Air Surging (Air or Nitrogen) ☐ Other _____
2. Time Spent on Well Development ?
   _____/_____ Minutes/Hours
3. Approximate Water Volume Removed ? _____ Gallons
4. Water Clarity Before Development ? Clear ☐
   Turbid ☐ Opaque ☐
5. Water Clarity After Development ? Clear ☐
   Turbid ☐ Opaque ☐
6. Did Water have Odor ? Yes ☐ No ☐
   If Yes, Describe _____
7. Did Water have any Color ? Yes ☐ No ☐
   If Yes , Describe _____

WATER LEVEL INFORMATION:

Water Level Summary (From Top of Casing)

During Drilling _____ Ft. Date _____

Before Development _____ Ft. Date _____

After Development _____ Ft. Date _____

Driller/Firm COMPLIANCE DRILLING Drill Rig Type MOBILE B-59 Date Installed 2/19/99

Drill Crew LEE ROBERTSON Well No. I-T Kerr-McGee Hydrologist J. CRAWFORD

SOIL BORING LOG KM-5655-B

KERR-McGEE CORPORATION Hydrology Dept. - S&EA Division	KM SUBSIDIARY KMcLLC	LOCATION HENDERSON, NV	BORING NUMBER I-U

DEPTH IN FEET	LITHOLOGIC DESCRIPTION	GRAPHIC LOG	UNIFIED SOIL FIELD CLASS.	BLOWS PER 6"	PID (ppm)	SOIL SAMPLE NO.	SOIL SAMPLE TYPE	SOIL SAMPLE DEPTH	SOIL SAMPLE REC.	REMARKS OR FIELD OBSERVATIONS
0	SAND / SILTY SAND W/ OCC. GRAVEL; V. SLI MOIST, LT. TAN-BROWN, WELL-GRADED		SM							
5										
10										
15			SM-GM							
20	LARGE GRAVEL @ 17-20'									
25	GRAVEL ZONE FROM 26-28,5									
28,5						1		28 29.5	1.3'	
30	CLAYEY SILT; SILTY CLAY; LT. BROWN; SLI. PLASTIC; OCC. ROCK FRAGS; MOIST TO SATURATED		ML-CL							
35	AS ABOVE; BECOMING MORE SILTY									

EXPLANATION

- ▼ Water Table (24 Hour)
- ▽ Water Table (Time of Boring)
- PID Photoionization Detection (ppm)
- NO. Identifies Sample by Number
- TYPE Sample Collection Method

SPLIT-BARREL | AUGER | ROCK CORE | THIN-WALLED TUBE | CONTINUOUS SAMPLER | NO RECOVERY

DEPTH Depth Top and Bottom of Sample
REC. Actual Length of Recovered Sample in Feet

GRAPHIC LOG LEGEND

CLAY | SILT | SAND | GRAVEL | SILTY CLAY | CLAYEY SILT | DEBRIS FILL | HIGHLY ORGANIC (PEAT) | SANDY CLAY | CLAYEY SAND | _____ | _____

DATE DRILLED	PAGE
2/16/99	1 of 2

DRILLING METHOD: HSA

DRILLED BY: COMPLIANCE DRLG.

LOGGED BY: T. REED

EXISTING GRADE ELEVATION (FT. AMSL):

LOCATION OR GRID COORDINATES:

SOIL BORING LOG KM-5655-B

KERR-McGEE CORPORATION Hydrology Dept. - S&EA Division	KM SUBSIDIARY KMCLLC	LOCATION HENDERSON, NV	BORING NUMBER I-U (CONT.)

DEPTH IN FEET	LITHOLOGIC DESCRIPTION	GRAPHIC LOG	UNIFIED SOIL FIELD CLASS.	BLOWS PER 6"	PID (ppm)	SOIL SAMPLE NO.	SOIL SAMPLE TYPE	SOIL SAMPLE DEPTH	SOIL SAMPLE REC.	REMARKS OR FIELD OBSERVATIONS
40	CLAYEY SILT, LT. BROWN; FINE SAND COMMON; SATURATED		ML							
45	TD 45'					2	X	45 46.5	.8	

EXPLANATION

- ▼ Water Table (24 Hour)
- ▽ Water Table (Time of Boring)
- PID Photoionization Detection (ppm)
- NO. Identifies Sample by Number
- TYPE Sample Collection Method

SPLIT-BARREL; AUGER; ROCK CORE; THIN-WALLED TUBE; CONTINUOUS SAMPLER; NO RECOVERY

DEPTH Depth Top and Bottom of Sample
REC. Actual Length of Recovered Sample in Feet

GRAPHIC LOG LEGEND

CLAY; SILT; SAND; GRAVEL; SILTY CLAY; CLAYEY SILT; DEBRIS FILL; HIGHLY ORGANIC (PEAT); SANDY CLAY; CLAYEY SAND; _____; _____

DATE DRILLED	2/16/99
PAGE	2 of 2
DRILLING METHOD	HSA
DRILLED BY	COMPLIANCE DRLG.
LOGGED BY	T. REED
EXISTING GRADE ELEVATION (FT. AMSL)	
LOCATION OR GRID COORDINATES	

KERR-McGEE CORPORATION
HYDROLOGY DEPARTMENT
MONITORING WELL INSTALLATION DIAGRAM

2.5 STICK UP

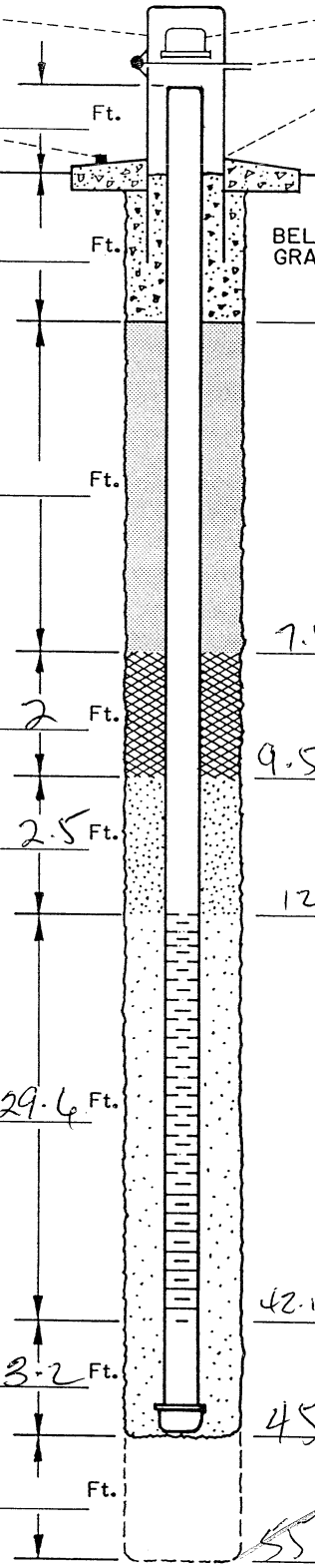

Protective Pipe — Yes ☐ No ☐ — Steel ☐ PVC ☐ — Surveying Pin ? Yes ☐ No ☐

Casing Cap Vent ? Yes ☐ No ☐

Lock ? Yes ☐ No ☐

Weep Hole ? Yes ☐ No ☐

Concrete Pad _____ Ft. x _____ Ft. x _____ Inches

Ft. _____

Concrete Ft. _____

Cement/Bentonite Grout Mix
Yes ☐ No ☐
5.5 Gallons Water to 94Lb. Bag Cement & 3–5 Lb. Bentonite Powder
Ft. _____
Other: _____

Bentonite Seal
Pellets ☒ Slurry ☐
2 Ft.

Filter Pack Above Screen
2.5 Ft.

FILTER PACK MATERIAL
Silica Sand ☐
Washed Sand ☒
29.6 Ft.
Pea Gravel ☐
Other: _____
Sand Size #3

Dense Phase Sampling Cup
Bottom Plug Yes ☒ No ☐
3.2 Ft.

Overdrilled Material Backfill
Ft. _____
Grout ☐ Sand ☐
Caved Material ☒
Other: _____

	DEPTH BELOW GRADE	DEPTH FROM TOP OF CASING
	7.5	10.2
	9.5	12.2
	12	14.7
	42.5	44.3
	45	47.5
	55	45

DRILLING INFORMATION:

1. Borehole Diameter= 10.5 Inches.
2. Were Drilling Additives Used ? Yes ☒ No ☐
   Revert ☐ Bentonite ☐ Water ☒
   Solid Auger ☐ Hollow Stem Auger ☒
3. Was Outer Steel Casing Used ? Yes ☐ No ☐
   Depth= _____ to _____ Feet.
4. Borehole Diameter for Outer Casing _____ Inches.

WELL CONSTRUCTION INFORMATION:

1. Type of Casing: PVC ☒ Galvanized ☐ Teflon ☐
   Stainless ☐ Other _____
2. Type of Casing Joints: Screw–Couple ☒ Glue–Couple ☐ Other _____
3. Type of Well Screen: PVC ☒ Galvanized ☐
   Stainless ☐ Teflon ☐ Other ~~CONTINUOUS~~
4. Diameter of Casing and Well Screen:
   Casing 4 Inches, Screen 4 Inches.
5. Slot Size of Screen: .020
6. Type of Screen Perforation: Factory Slotted ☒
   Hacksaw ☐ Drilled ☐ Other CONTINUOUS
7. Installed Protector Pipe w/Lock: Yes ☐ No ☐

WELL DEVELOPMENT INFORMATION:

1. How was Well Developed ? Bailing ☐ Pumping ☐
   Air Surging (Air or Nitrogen) ☐ Other SURGE BLOCK
2. Time Spent on Well Development ?
   _____ / _____ Minutes/Hours
3. Approximate Water Volume Removed ? _____ Gallons
4. Water Clarity Before Development ? Clear ☐
   Turbid ☐ Opaque ☐
5. Water Clarity After Development ? Clear ☐
   Turbid ☐ Opaque ☐
6. Did Water have Odor ? Yes ☐ No ☐
   If Yes, Describe _____
7. Did Water have any Color ? Yes ☐ No ☐
   If Yes , Describe _____

WATER LEVEL INFORMATION:

Water Level Summary (From Top of Casing)

During Drilling _____ Ft. Date _____

Before Development _____ Ft. Date _____

After Development _____ Ft. Date _____

Driller/Firm COMPLIANCE DRILLING Drill Rig Type MOBILE B-59 Date Installed 2/18/99

Drill Crew LEE ROBERTSON Well No. I-4 Kerr–McGee Hydrologist J. CRAWFORD

SOIL BORING LOG KM-5655-B

KERR-McGEE CORPORATION Hydrology Dept. - S&EA Division	KM SUBSIDIARY KMCLLC	LOCATION HENDERSON NV	BORING NUMBER I-V

DEPTH IN FEET	LITHOLOGIC DESCRIPTION	GRAPHIC LOG	UNIFIED SOIL FIELD CLASS.	BLOWS PER 6"	PID (ppm)	SOIL SAMPLE NO.	SOIL SAMPLE TYPE	SOIL SAMPLE DEPTH	SOIL SAMPLE REC.	REMARKS OR FIELD OBSERVATIONS
5	SAND / SILTY SAND; LT TAN BROWN; GRAVEL OCC. TO COMMON; V SLI MOIST; WELL GRADED		SM/GM							
10	GRAVEL ZONE 12.5 to 14'									
15	GRAVEL 16 - 18'									
20										
25			SM/GM							
	SAND BRN FINE to CRS GRAIN; WELL GRADED SILTY; FEW GRAVELS WET; LOOSE; SOME STRONG CEMENTED			(3") 12 53				28 29	1	27' DRILLING HARD
30										
35	CLAYEY SILT LT BRN SLOW DILATENCY V SLI PLASTIC		ML	13 16 16					1.5	T/ MUDDY CREEK 32.5'
40										

EXPLANATION

- ▼ Water Table (24 Hour)
- ▽ Water Table (Time of Boring)
- PID Photoionization Detection (ppm)
- NO. Identifies Sample by Number
- TYPE Sample Collection Method
- SPLIT-BARREL
- AUGER
- ROCK CORE
- THIN-WALLED TUBE
- CONTINUOUS SAMPLER
- NO RECOVERY
- DEPTH Depth Top and Bottom of Sample
- REC. Actual Length of Recovered Sample in Feet

GRAPHIC LOG LEGEND

- CLAY
- SILT
- SAND
- GRAVEL
- SILTY CLAY
- CLAYEY SILT
- DEBRIS FILL
- HIGHLY ORGANIC (PEAT)
- SANDY CLAY
- CLAYEY SAND
- _____
- _____

DATE DRILLED	2/17/99
PAGE	1 of 2
DRILLING METHOD	HSA
DRILLED BY	COMPLIANCE DRILLING
LOGGED BY	J CRAWFORD
EXISTING GRADE ELEVATION (FT. AMSL)	
LOCATION OR GRID COORDINATES	

SOIL BORING LOG KM-5655-B

KERR-McGEE CORPORATION Hydrology Dept. - S&EA Division	KM SUBSIDIARY KMLLC	LOCATION HENDERSON NV	BORING NUMBER I-V

DEPTH IN FEET	LITHOLOGIC DESCRIPTION	GRAPHIC LOG	UNIFIED SOIL FIELD CLASS.	BLOWS PER 6"	PID (ppm)	SOIL SAMPLE NO.	SOIL SAMPLE TYPE	SOIL SAMPLE DEPTH	SOIL SAMPLE REC.	REMARKS OR FIELD OBSERVATIONS
45			ML							
50	CLAYEY SILT to SILTY CLAY LT-DRK BRN moist MED. PLAST									
55										TD 55'

EXPLANATION

- ▼ Water Table (24 Hour)
- ▽ Water Table (Time of Boring)
- PID Photoionization Detection (ppm)
- NO. Identifies Sample by Number
- TYPE Sample Collection Method

SPLIT-BARREL | AUGER | ROCK CORE | THIN-WALLED TUBE | CONTINUOUS SAMPLER | NO RECOVERY

DEPTH Depth Top and Bottom of Sample
REC. Actual Length of Recovered Sample in Feet

GRAPHIC LOG LEGEND

CLAY | DEBRIS FILL | SILT | HIGHLY ORGANIC (PEAT) | SAND | SANDY CLAY | GRAVEL | CLAYEY SAND | SILTY CLAY | _____ | CLAYEY SILT | _____

DATE DRILLED: 2/17/99 | PAGE: 2 of 2
DRILLING METHOD: HSA
DRILLED BY: COMPLIANCE DRILLING
LOGGED BY: J. CRAWFORD
EXISTING GRADE ELEVATION (FT. AMSL):
LOCATION OR GRID COORDINATES:

KERR-McGEE CORPORATION
HYDROLOGY DEPARTMENT
MONITORING WELL INSTALLATION DIAGRAM

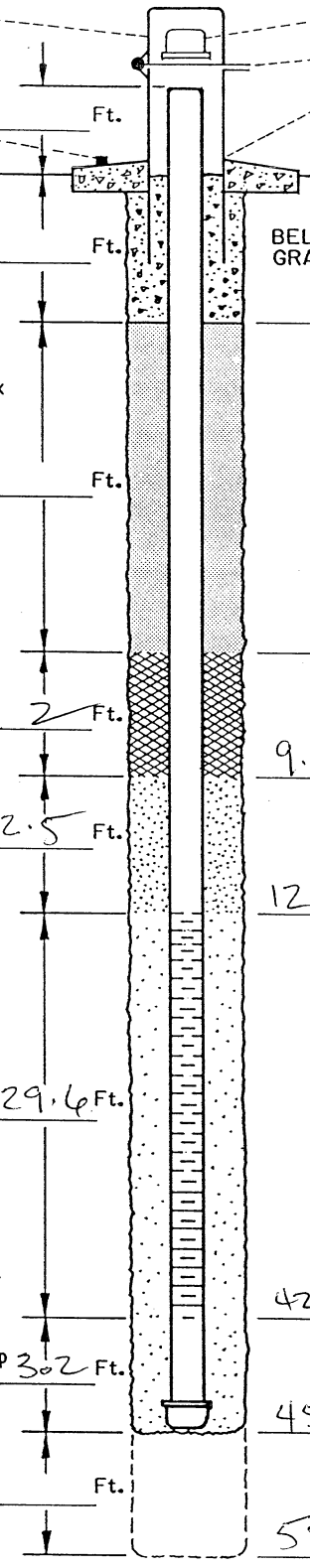

DRILLING INFORMATION:

1. Borehole Diameter= 10.5 Inches.
2. Were Drilling Additives Used ? Yes ☐ No ☒
   Revert ☐ Bentonite ☐ Water ☐
   Solid Auger ☐ Hollow Stem Auger ☒
3. Was Outer Steel Casing Used ? Yes ☐ No ☒
   Depth= _____ to _____ Feet.
4. Borehole Diameter for Outer Casing _____ Inches.

WELL CONSTRUCTION INFORMATION:

1. Type of Casing: PVC ☒ Galvanized ☐ Teflon ☐
   Stainless ☐ Other _____
2. Type of Casing Joints: Screw-Couple ☐ Glue-Couple ☐ Other _____
3. Type of Well Screen: PVC ☒ Galvanized ☐
   Stainless ☐ Teflon ☐ Other _____
4. Diameter of Casing and Well Screen:
   Casing 6 Inches, Screen 4 Inches.
5. Slot Size of Screen:
6. Type of Screen Perforation: Factory Slotted ☒
   Hacksaw ☐ Drilled ☐ Other CONTINUOUS
7. Installed Protector Pipe w/Lock: Yes ☐ No ☐

WELL DEVELOPMENT INFORMATION:

1. How was Well Developed ? Bailing ☐ Pumping ☐
   Air Surging (Air or Nitrogen) ☐ Other _____
2. Time Spent on Well Development ?
   _____ / _____ Minutes/Hours
3. Approximate Water Volume Removed ? _____ Gallons
4. Water Clarity Before Development ? Clear ☐
   Turbid ☐ Opaque ☐
5. Water Clarity After Development ? Clear ☐
   Turbid ☐ Opaque ☐
6. Did Water have Odor ? Yes ☐ No ☐
   If Yes, Describe _____
7. Did Water have any Color ? Yes ☐ No ☐
   If Yes , Describe _____

WATER LEVEL INFORMATION:

Water Level Summary (From Top of Casing)

During Drilling _____ Ft. Date _____
Before Development 29.4 Ft. Date 2/18/99
After Development _____ Ft. Date _____

Driller/Firm COMPLIANCE DRILLING Drill Rig Type MOBILE B-59 Date Installed 2/17/99

Drill Crew LEE ROBERTSON Well No. I-V Kerr-McGee Hydrologist J. CRAWFORD

SOIL BORING LOG KM-5655-B

KERR-McGEE CORPORATION Hydrology Dept. - S&EA Division	KM SUBSIDIARY KMC LLC	LOCATION HENDERSON, NV	BORING NUMBER I-W

DEPTH IN FEET	LITHOLOGIC DESCRIPTION	GRAPHIC LOG	UNIFIED SOIL FIELD CLASS.	BLOWS PER 6"	PID (ppm)	SOIL SAMPLE NO.	SOIL SAMPLE TYPE	SOIL SAMPLE DEPTH	SOIL SAMPLE REC.	REMARKS OR FIELD OBSERVATIONS
0	0-26 silty SAND w/ scattered minor thin gravel zones. Gry orange (10YR 7/4). 10-20% silt in vf-vc, A-SR qtz-volc sand and 10-15% granules. Calcareous throughout w/ minor to com. caliche nodules. 9-10 2"-3" volc gravel zone. 14-15 volc granule zone.		SP/SM							
26	26-33 sdy GRAVEL, gry oran (10YR 7/4). very hard-strong calichification. Gravels are pea gravel size w/ 4"-5" cobbles @ 27', 20-30% vf-vc A-SA sd.		GP							WET @ 30' (in fractures) ▽
33	33-50TD sdy SILT, dk yell oran (10YR 6/6). calcareous. 10-20% vfg, A-SA sd in silt.		ML							TOP of MC @ 33'

EXPLANATION

- ▼ Water Table (24 Hour)
- ▽ Water Table (Time of Boring)
- PID Photoionization Detection (ppm)
- NO. Identifies Sample by Number
- TYPE Sample Collection Method
- SPLIT BARREL
- AUGER
- ROCK CORE
- THIN-WALLED TUBE
- CONTINUOUS SAMPLER
- NO RECOVERY
- DEPTH Depth Top and Bottom of Sample
- REC. Actual Length of Recovered Sample in Feet

GRAPHIC LOG LEGEND

- CLAY
- SILT
- SAND
- GRAVEL
- SILTY CLAY
- CLAYEY SILT
- DEBRIS FILL
- HIGHLY ORGANIC (PEAT)
- SANDY CLAY
- CLAYEY SAND

DATE DRILLED	9-13-00
PAGE	1 of 2
DRILLING METHOD	PERCUSSION
DRILLED BY	LAYNE
LOGGED BY	ED KRISH
EXISTING GRADE ELEVATION (FT. AMSL)	
LOCATION OR GRID COORDINATES	

SOIL BORING LOG KM-5655-B

KERR-McGEE CORPORATION Hydrology Dept. - S&EA Division	KM SUBSIDIARY KMC LLC	LOCATION HENDERSON, NV	BORING NUMBER I-W

DEPTH IN FEET	LITHOLOGIC DESCRIPTION	GRAPHIC LOG	UNIFIED SOIL FIELD CLASS.	BLOWS PER 6"	PID (ppm)	SOIL SAMPLE NO.	SOIL SAMPLE TYPE	SOIL SAMPLE DEPTH	SOIL SAMPLE REC.	REMARKS OR FIELD OBSERVATIONS
	minor thin zones of SILT, interbedded		ML							
45										
50	50' TD									

EXPLANATION

- ▼ Water Table (24 Hour)
- ▽ Water Table (Time of Boring)
- PID Photoionization Detection (ppm)
- NO. Identifies Sample by Number
- TYPE Sample Collection Method
- SPLIT-BARREL
- AUGER
- ROCK CORE
- THIN-WALLED TUBE
- CONTINUOUS SAMPLER
- NO RECOVERY
- DEPTH Depth Top and Bottom of Sample
- REC. Actual Length of Recovered Sample in Feet

GRAPHIC LOG LEGEND

- CLAY
- SILT
- SAND
- GRAVEL
- SILTY CLAY
- CLAYEY SILT
- DEBRIS FILL
- HIGHLY ORGANIC (PEAT)
- SANDY CLAY
- CLAYEY SAND
- _____
- _____

DATE DRILLED	PAGE
9-13-00	2 of 2

DRILLING METHOD: PERCUSSION

DRILLED BY: LAYNE

LOGGED BY: ED KRISH

EXISTING GRADE ELEVATION (FT. AMSL)

LOCATION OR GRID COORDINATES

KERR-McGEE CORPORATION
HYDROLOGY DEPARTMENT
MONITORING WELL INSTALLATION DIAGRAM

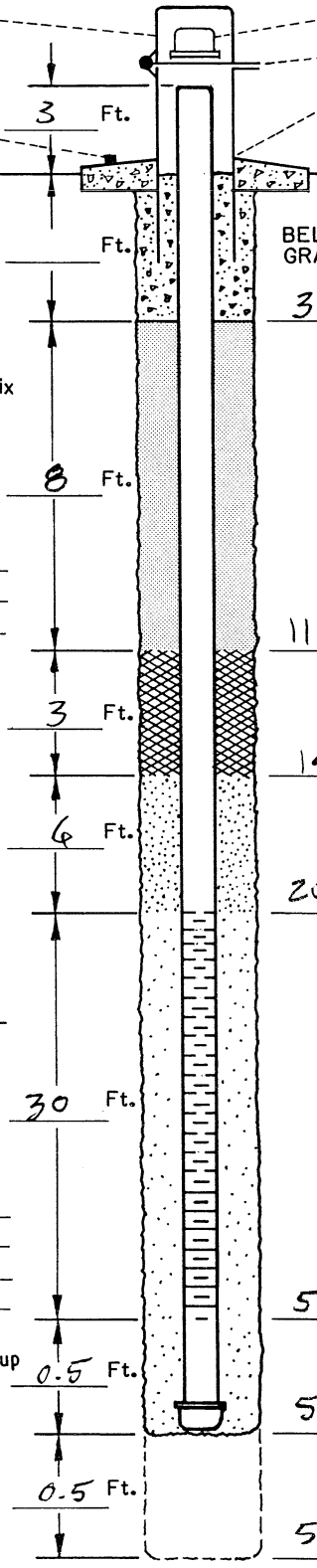

DRILLING INFORMATION:

1. Borehole Diameter= 10.75 Inches.
2. Were Drilling Additives Used ? Yes ☐ No ☒
   Revert ☐ Bentonite ☐ Water ☐
   Solid Auger ☐ Hollow Stem Auger ☐
3. Was Outer Steel Casing Used ? Yes ☐ No ☒
   Depth= _____ to _____ Feet.
4. Borehole Diameter for Outer Casing _____ Inches.

WELL CONSTRUCTION INFORMATION:

1. Type of Casing: PVC ☒ Galvanized ☐ Teflon ☐
   Stainless ☐ Other _____
2. Type of Casing Joints: Screw-Couple ☒ Glue-Couple ☐ Other _____
3. Type of Well Screen: PVC ☒ Galvanized ☐
   Stainless ☐ Teflon ☐ Other _____
4. Diameter of Casing and Well Screen:
   Casing 6 Inches, Screen 6 Inches.
5. Slot Size of Screen: 0.020
6. Type of Screen Perforation: Factory Slotted ☒
   Hacksaw ☐ Drilled ☐ Other _____
7. Installed Protector Pipe w/Lock: Yes ☒ No ☐

WELL DEVELOPMENT INFORMATION:

1. How was Well Developed ? Bailing ☒ Pumping ☒
   Air Surging (Air or Nitrogen) ☐ Other _____
2. Time Spent on Well Development ?
   _____ / _____ Minutes/Hours
3. Approximate Water Volume Removed ? _____ Gallons
4. Water Clarity Before Development ? Clear ☐
   Turbid ☐ Opaque ☐
5. Water Clarity After Development ? Clear ☐
   Turbid ☐ Opaque ☐
6. Did Water have Odor ? Yes ☐ No ☐
   If Yes, Describe _____
7. Did Water have any Color ? Yes ☐ No ☐
   If Yes , Describe _____

WATER LEVEL INFORMATION:

Water Level Summary (From Top of Casing)

During Drilling 30 NG Ft. Date 9-13-00

Before Development 29.2 NG Ft. Date 9-19-00

After Development _____ Ft. Date _____

Driller/Firm LAYNE Drill Rig Type AP-1000 Date Installed 9-13-00

Drill Crew _____ Well No. I-W Kerr-McGee Hydrologist ED KRISH

SOIL BORING LOG KM-5655-B

KERR-McGEE CORPORATION Hydrology Dept. - S&EA Division	KM SUBSIDIARY KMC LLC	LOCATION HENDERSON, NV	BORING NUMBER I-X

DEPTH IN FEET	LITHOLOGIC DESCRIPTION	GRAPHIC LOG	UNIFIED SOIL FIELD CLASS.	BLOWS PER 6"	PID (ppm)	SOIL SAMPLE NO.	SOIL SAMPLE TYPE	SOIL SAMPLE DEPTH	SOIL SAMPLE REC.	REMARKS OR FIELD OBSERVATIONS
0	0-17 silty SAND w/ minor gravelly zones. Gry Oran (10YR7/4). 10-20% silt in vf-vc A-SR sd. Locally thin zones of sd-granules w/o silt. Calcareous throughout w/ minor sd-size caliche nodules. 9-11, 14-15 clean zones w/ tr silt and 20-30% granules (volc)		SM/SP							
17	17-33 sdy GRAVEL w/ com caliche in lower part. Gry oran (10YR7/4) 20-30% vf-vc, A-SA sd in granules (volc). Calcareous @ 17' 2"-3" pebbles 23-33 calichified, semi-hard... pervasive but not massive. inc in caliche downward.		GP							WET @ 30' ▽
33	33-50 TD sdy SILT. dk yell oran (10YR 6/6), 10-20% vfg, A-SA sd in silt. Calcareous throughout w/ minor		ML							TOP of MC @ 33'

EXPLANATION

- ▼ Water Table (24 Hour)
- ▽ Water Table (Time of Boring)
- PID Photoionization Detection (ppm)
- NO. Identifies Sample by Number
- TYPE Sample Collection Method

SPLIT-BARREL · AUGER · ROCK CORE · THIN-WALLED TUBE · CONTINUOUS SAMPLER · NO RECOVERY

DEPTH Depth Top and Bottom of Sample
REC. Actual Length of Recovered Sample in Feet

GRAPHIC LOG LEGEND

CLAY · SILT · SAND · GRAVEL · SILTY CLAY · CLAYEY SILT · DEBRIS FILL · HIGHLY ORGANIC (PEAT) · SANDY CLAY · CLAYEY SAND

DATE DRILLED	9-13-00
PAGE	1 of 2
DRILLING METHOD	PERCUSSION
DRILLED BY	LAYNE
LOGGED BY	ED KRISH
EXISTING GRADE ELEVATION (FT. AMSL)	
LOCATION OR GRID COORDINATES	

SOIL BORING LOG KM-5655-B

KERR-McGEE CORPORATION Hydrology Dept. - S&EA Division	KM SUBSIDIARY KMC LLC	LOCATION HENDERSON, NV	BORING NUMBER I-X

DEPTH IN FEET	LITHOLOGIC DESCRIPTION	GRAPHIC LOG	UNIFIED SOIL FIELD CLASS.	BLOWS PER 6"	PID (ppm)	SOIL SAMPLE NO.	SOIL SAMPLE TYPE	SOIL SAMPLE DEPTH	SOIL SAMPLE REC.	REMARKS OR FIELD OBSERVATIONS
45	C-VC sd-size caliche nodules. Minor thin interbeds of silt		ML							
50	50' TD									

EXPLANATION

- ▼ Water Table (24 Hour)
- ▽ Water Table (Time of Boring)
- PID Photoionization Detection (ppm)
- NO. Identifies Sample by Number
- TYPE Sample Collection Method

SPLIT-BARREL; AUGER; ROCK CORE; THIN-WALLED TUBE; CONTINUOUS SAMPLER; NO RECOVERY

DEPTH Depth Top and Bottom of Sample
REC. Actual Length of Recovered Sample in Feet

GRAPHIC LOG LEGEND

CLAY; SILT; SAND; GRAVEL; SILTY CLAY; CLAYEY SILT; DEBRIS FILL; HIGHLY ORGANIC (PEAT); SANDY CLAY; CLAYEY SAND; _____; _____

DATE DRILLED	PAGE
9-13-00	2 of 2

DRILLING METHOD: PERCUSSION

DRILLED BY: LAYNE

LOGGED BY: ED KRISH

EXISTING GRADE ELEVATION (FT. AMSL)

LOCATION OR GRID COORDINATES

KERR-McGEE CORPORATION
HYDROLOGY DEPARTMENT
MONITORING WELL INSTALLATION DIAGRAM

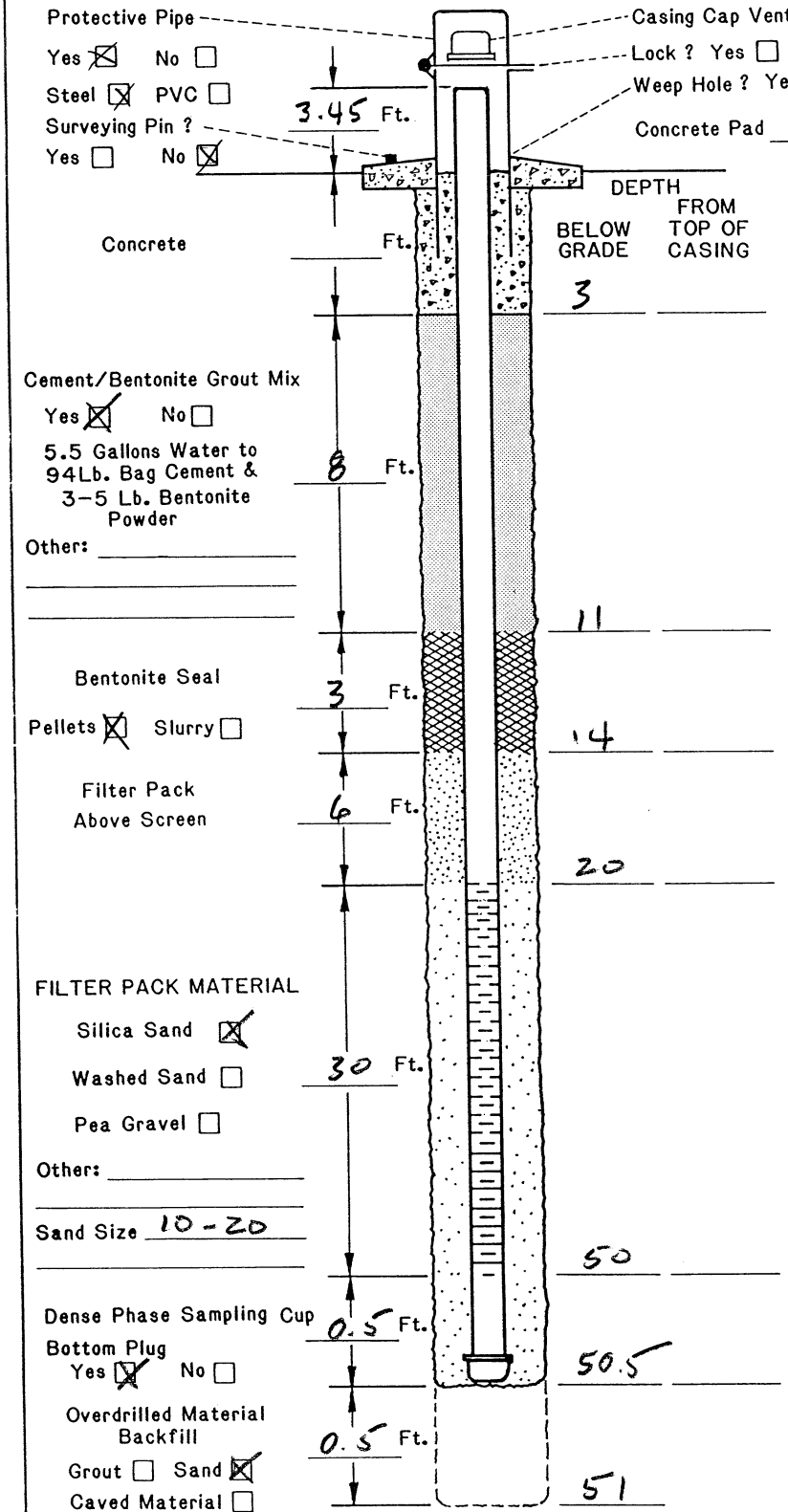

DRILLING INFORMATION:

1. Borehole Diameter= 10.75 Inches.
2. Were Drilling Additives Used ? Yes ☐ No ☒
   Revert ☐ Bentonite ☐ Water ☐
   Solid Auger ☐ Hollow Stem Auger ☐
3. Was Outer Steel Casing Used ? Yes ☐ No ☒
   Depth= _____ to _____ Feet.
4. Borehole Diameter for Outer Casing _____ Inches.

WELL CONSTRUCTION INFORMATION:

1. Type of Casing: PVC ☒ Galvanized ☐ Teflon ☐
   Stainless ☐ Other _____
2. Type of Casing Joints: Screw-Couple ☒ Glue-Couple ☐ Other _____
3. Type of Well Screen: PVC ☒ Galvanized ☐
   Stainless ☐ Teflon ☐ Other _____
4. Diameter of Casing and Well Screen:
   Casing 6 Inches, Screen 6 Inches.
5. Slot Size of Screen: 0.020
6. Type of Screen Perforation: Factory Slotted ☒
   Hacksaw ☐ Drilled ☐ Other _____
7. Installed Protector Pipe w/Lock: Yes ☒ No ☐

WELL DEVELOPMENT INFORMATION:

1. How was Well Developed ? Bailing ☐ Pumping ☐
   Air Surging (Air or Nitrogen) ☐ Other _____
2. Time Spent on Well Development ?
   _____/_____ Minutes/Hours
3. Approximate Water Volume Removed ? _____ Gallons
4. Water Clarity Before Development ? Clear ☐
   Turbid ☐ Opaque ☐
5. Water Clarity After Development ? Clear ☐
   Turbid ☐ Opaque ☐
6. Did Water have Odor ? Yes ☐ No ☐
   If Yes, Describe _____
7. Did Water have any Color ? Yes ☐ No ☐
   If Yes , Describe _____

WATER LEVEL INFORMATION:

Water Level Summary (From Top of Casing)

During Drilling 33 ng Ft. Date 9-13-00
Before Development 27.85 ng Ft. Date 9-19-00
After Development _____ Ft. Date _____

Driller/Firm LAYNE
Drill Rig Type AP-1000
Date Installed 9-13-00
Drill Crew Hormann
Well No. I-X
Kerr-McGee Hydrologist ED KRISH

SOIL BORING LOG KM-5655-B

KERR-McGEE CORPORATION Hydrology Dept. - S&EA Division	KM SUBSIDIARY KMC LLC	LOCATION HENDERSON, NV	BORING NUMBER I-Y

DEPTH IN FEET	LITHOLOGIC DESCRIPTION	GRAPHIC LOG	UNIFIED SOIL FIELD CLASS.	BLOWS PER 6"	PID (ppm)	SOIL SAMPLE NO.	SOIL SAMPLE TYPE	SOIL SAMPLE DEPTH	SOIL SAMPLE REC.	REMARKS OR FIELD OBSERVATIONS
5	0-9 silty gravelly SAND gry oran (10YR 7/4) and pale yell brn (10YR 7/2). 10-20% silt in vf-vc sd w/ 10-20% volc granule-pea gravel. Calcareous.		SP/SM							
9	9-19 sdy GRAVEL pale yell brn (10YR 7/2). 20-30% vf-vc sd in gran-pea grav. to 2". 17-18 cobbles to 4"-5"		GP							
19	19-26 SAND. gry oran (10YR 7/4). vf-m w/ minor cg. SA-SR, clean. sl. calcareous... com. calc. 23'-26'		SP							
26	26-28 Gravel. gry oran. volc pebbles to 3". calichified		GW							wet @ 27 ▽
28	28-50 TD sdy SILT & SILT. Mod yell orange (10YR 7/6). 10-20% vfg sd in silt. Calcareous throughout w/ minor sd-size caliche nodules		ML							MC @ 28'
30										
35										

EXPLANATION

- ▼ Water Table (24 Hour)
- ▽ Water Table (Time of Boring)
- PID Photoionization Detection (ppm)
- NO. Identifies Sample by Number
- TYPE Sample Collection Method

SPLIT-BARREL · AUGER · ROCK CORE · THIN-WALLED TUBE · CONTINUOUS SAMPLER · NO RECOVERY

DEPTH Depth Top and Bottom of Sample
REC. Actual Length of Recovered Sample in Feet

GRAPHIC LOG LEGEND

CLAY · SILT · SAND · GRAVEL · SILTY CLAY · CLAYEY SILT · DEBRIS FILL · HIGHLY ORGANIC (PEAT) · SANDY CLAY · CLAYEY SAND

DATE DRILLED	PAGE
9-14-00	1 of 2
DRILLING METHOD: PERCUSSION	
DRILLED BY: LAYNE	
LOGGED BY: ED KRISH	
EXISTING GRADE ELEVATION (FT. AMSL)	
LOCATION OR GRID COORDINATES	

SOIL BORING LOG KM-5655-B

KERR-McGEE CORPORATION Hydrology Dept. - S&EA Division	KM SUBSIDIARY KMC LLC	LOCATION HENDERSON, NV	BORING NUMBER I-Y

DEPTH IN FEET	LITHOLOGIC DESCRIPTION	GRAPHIC LOG	UNIFIED SOIL FIELD CLASS.	BLOWS PER 6"	PID (ppm)	SOIL SAMPLE NO.	SOIL SAMPLE TYPE	SOIL SAMPLE DEPTH	SOIL SAMPLE REC.	REMARKS OR FIELD OBSERVATIONS
45			ML							
50	50' TD									

EXPLANATION

- ▼ Water Table (24 Hour)
- ▽ Water Table (Time of Boring)
- PID Photoionization Detection (ppm)
- NO. Identifies Sample by Number
- TYPE Sample Collection Method

SPLIT-BARREL | AUGER | ROCK CORE | THIN-WALLED TUBE | CONTINUOUS SAMPLER | NO RECOVERY

DEPTH Depth Top and Bottom of Sample
REC. Actual Length of Recovered Sample in Feet

GRAPHIC LOG LEGEND

CLAY | DEBRIS FILL | SILT | HIGHLY ORGANIC (PEAT) | SAND | SANDY CLAY | GRAVEL | CLAYEY SAND | SILTY CLAY | _____ | CLAYEY SILT | _____

DATE DRILLED: 9-14-00
PAGE: 2 of 2
DRILLING METHOD: PERCUSSION
DRILLED BY: LAYNE
LOGGED BY: ED KRISH
EXISTING GRADE ELEVATION (FT. AMSL)
LOCATION OR GRID COORDINATES

KERR-McGEE CORPORATION
HYDROLOGY DEPARTMENT
MONITORING WELL INSTALLATION DIAGRAM

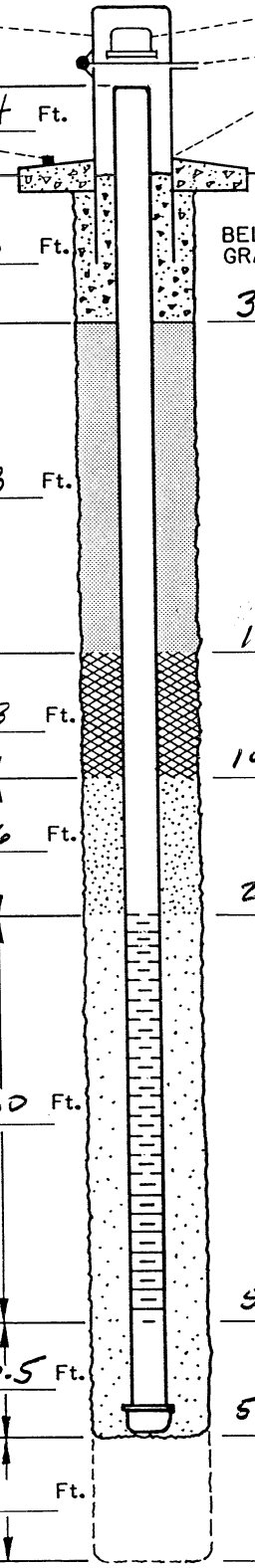

Protective Pipe — Yes ☒ No ☐ — Steel ☒ PVC ☐ — 3.4 Ft.

Surveying Pin ? Yes ☐ No ☒

Casing Cap Vent ? Yes ☒ No ☐

Lock ? Yes ☐ No ☒

Weep Hole ? Yes ☐ No ☒

Concrete Pad _____ Ft. x _____ Ft. x _____ Inches

		DEPTH BELOW GRADE	DEPTH FROM TOP OF CASING
Concrete	3 Ft.	3	
Cement/Bentonite Grout Mix — Yes ☒ No ☐ — 5.5 Gallons Water to 94Lb. Bag Cement & 3-5 Lb. Bentonite Powder — Other: _____	8 Ft.	11	
Bentonite Seal — Pellets ☒ Slurry ☐	3 Ft.	14	
Filter Pack Above Screen	6 Ft.	20	
FILTER PACK MATERIAL — Silica Sand ☒ — Washed Sand ☐ — Pea Gravel ☐ — Other: _____ — Sand Size 10-20	30 Ft.	50	
Dense Phase Sampling Cup — Bottom Plug Yes ☒ No ☐	0.5 Ft.	50.5	
Overdrilled Material Backfill — Grout ☐ Sand ☐ — Caved Material ☐ — Other: _____	Ft.		

DRILLING INFORMATION:

1. Borehole Diameter= 10.75 Inches.
2. Were Drilling Additives Used ? Yes ☐ No ☒
   Revert ☐ Bentonite ☐ Water ☐
   Solid Auger ☐ Hollow Stem Auger ☐
3. Was Outer Steel Casing Used ? Yes ☐ No ☒
   Depth= _____ to _____ Feet.
4. Borehole Diameter for Outer Casing _____ Inches.

WELL CONSTRUCTION INFORMATION:

1. Type of Casing: PVC ☒ Galvanized ☐ Teflon ☐
   Stainless ☐ Other _____
2. Type of Casing Joints: Screw-Couple ☒ Glue-Couple ☐ Other _____
3. Type of Well Screen: PVC ☒ Galvanized ☐
   Stainless ☐ Teflon ☐ Other _____
4. Diameter of Casing and Well Screen:
   Casing 6 Inches, Screen 6 Inches.
5. Slot Size of Screen: 0.020
6. Type of Screen Perforation: Factory Slotted ☒
   Hacksaw ☐ Drilled ☐ Other _____
7. Installed Protector Pipe w/Lock: Yes ☒ No ☐

WELL DEVELOPMENT INFORMATION:

1. How was Well Developed ? Bailing ☐ Pumping ☐
   Air Surging (Air or Nitrogen) ☐ Other _____
2. Time Spent on Well Development ?
   _____/_____ Minutes/Hours
3. Approximate Water Volume Removed ? _____ Gallons
4. Water Clarity Before Development ? Clear ☐
   Turbid ☐ Opaque ☐
5. Water Clarity After Development ? Clear ☐
   Turbid ☐ Opaque ☐
6. Did Water have Odor ? Yes ☐ No ☐
   If Yes, Describe _____
7. Did Water have any Color ? Yes ☐ No ☐
   If Yes , Describe _____

WATER LEVEL INFORMATION:

Water Level Summary (From Top of Casing)

During Drilling 28 ng Ft. Date 9-14-00

Before Development 28.85 ng Ft. Date 9-19-00

After Development _____ Ft. Date _____

Driller/Firm LAYNE — Drill Rig Type AP-1000 — Date Installed 9-14-00

Drill Crew HORMANN — Well No. I-Y — Kerr-McGee Hydrologist ED KRISH

32.25
3.40

27.25 TOC

.4 3.8

SOIL BORING LOG KM-5655-B

KERR-McGEE CORPORATION Hydrology Dept. - S&EA Division	KM SUBSIDIARY KMCLLC	LOCATION HENDERSON NV	BORING NUMBER I-2

DEPTH IN FEET	LITHOLOGIC DESCRIPTION	GRAPHIC LOG	UNIFIED SOIL FIELD CLASS.	BLOWS PER 6"	PID (ppm)	SOIL SAMPLE NO.	SOIL SAMPLE TYPE	SOIL SAMPLE DEPTH	SOIL SAMPLE REC.	REMARKS OR FIELD OBSERVATIONS
5	0-13 silty gravelly SAND, lt brn, 10-15% silt w/ 10-15% pea gravel to ½", vf-vc, SA sand									
10	10-10.5 hard calichified zone									
13										
15	13-25 silty sdy GRAVEL, brn, 10-15% silt, 20-25% vf-vc sd, gravel to 1½"									wet @ 22'
20	17.5-18' hard calichified zone									
23	23-23.5' hard calichified zone									
25	25-40 dk brn, silty clAy with sdy SILT									MC @ 25'
30										
35	TD @ 40'									

EXPLANATION

- ▼ Water Table (24 Hour)
- ▽ Water Table (Time of Boring)
- PID Photoionization Detection (ppm)
- NO. Identifies Sample by Number
- TYPE Sample Collection Method
- SPLIT-BARREL
- AUGER
- ROCK CORE
- THIN-WALLED TUBE
- CONTINUOUS SAMPLER
- NO RECOVERY
- DEPTH Depth Top and Bottom of Sample
- REC. Actual Length of Recovered Sample in Feet

GRAPHIC LOG LEGEND

- CLAY
- SILT
- SAND
- GRAVEL
- SILTY CLAY
- CLAYEY SILT
- DEBRIS FILL
- HIGHLY ORGANIC (PEAT)
- SANDY CLAY
- CLAYEY SAND
- _____
- _____

DATE DRILLED	PAGE
6-19-03	1 of 1

DRILLING METHOD: HSA

DRILLED BY: ELITE DRILLING

LOGGED BY: ED KRISH

EXISTING GRADE ELEVATION (FT. AMSL)

LOCATION OR GRID COORDINATES

KERR-McGEE CORPORATION
HYDROLOGY DEPARTMENT
MONITORING WELL INSTALLATION DIAGRAM

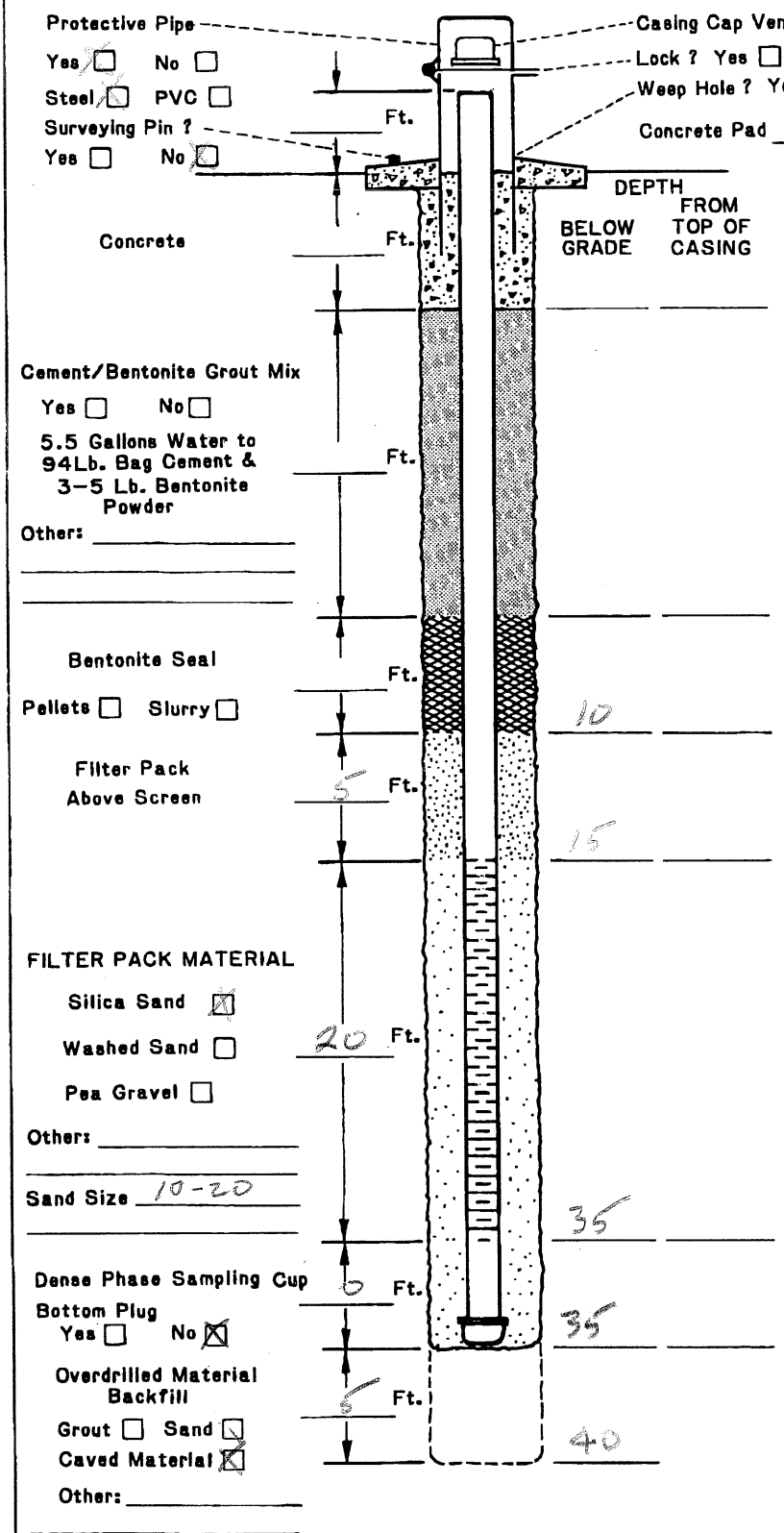

DRILLING INFORMATION:

1. Borehole Diameter= 9 Inches.
2. Were Drilling Additives Used ? Yes ☐ No ☒
   Revert ☐ Bentonite ☐ Water ☐
   Solid Auger ☐ Hollow Stem Auger ☒
3. Was Outer Steel Casing Used ? Yes ☐ No ☒
   Depth= _____ to _____ Feet.
4. Borehole Diameter for Outer Casing _____ Inches.

WELL CONSTRUCTION INFORMATION:

1. Type of Casing: PVC ☒ Galvanized ☐ Teflon ☐
   Stainless ☐ Other _____
2. Type of Casing Joints: Screw-Couple ☒ Glue-Couple ☐ Other _____
3. Type of Well Screen: PVC ☒ Galvanized ☐
   Stainless ☐ Teflon ☐ Other _____
4. Diameter of Casing and Well Screen:
   Casing 4 Inches, Screen 4 Inches.
5. Slot Size of Screen: .020
6. Type of Screen Perforation: Factory Slotted ☒
   Hacksaw ☐ Drilled ☐ Other _____
7. Installed Protector Pipe w/Lock: Yes ☐ No ☒

WELL DEVELOPMENT INFORMATION:

1. How was Well Developed ? Bailing ☐ Pumping ☐
   Air Surging (Air or Nitrogen) ☐ Other _____
2. Time Spent on Well Development ?
   _____ / _____ Minutes/Hours
3. Approximate Water Volume Removed ? _____ Gallons
4. Water Clarity Before Development ? Clear ☐
   Turbid ☐ Opaque ☐
5. Water Clarity After Development ? Clear ☐
   Turbid ☐ Opaque ☐
6. Did Water have Odor ? Yes ☐ No ☐
   If Yes, Describe _____
7. Did Water have any Color ? Yes ☐ No ☐
   If Yes , Describe _____

WATER LEVEL INFORMATION:

Water Level Summary (From Top of Casing)

During Drilling _____ Ft. Date _____
Before Development _____ Ft. Date _____
After Development _____ Ft. Date _____

Driller/Firm TENV / ELITE Drill Rig Type CME 75 Date Installed 6-19-03

Drill Crew TOM / CHRIS Well No. I-2 Kerr-McGee Hydrologist ED KEITH