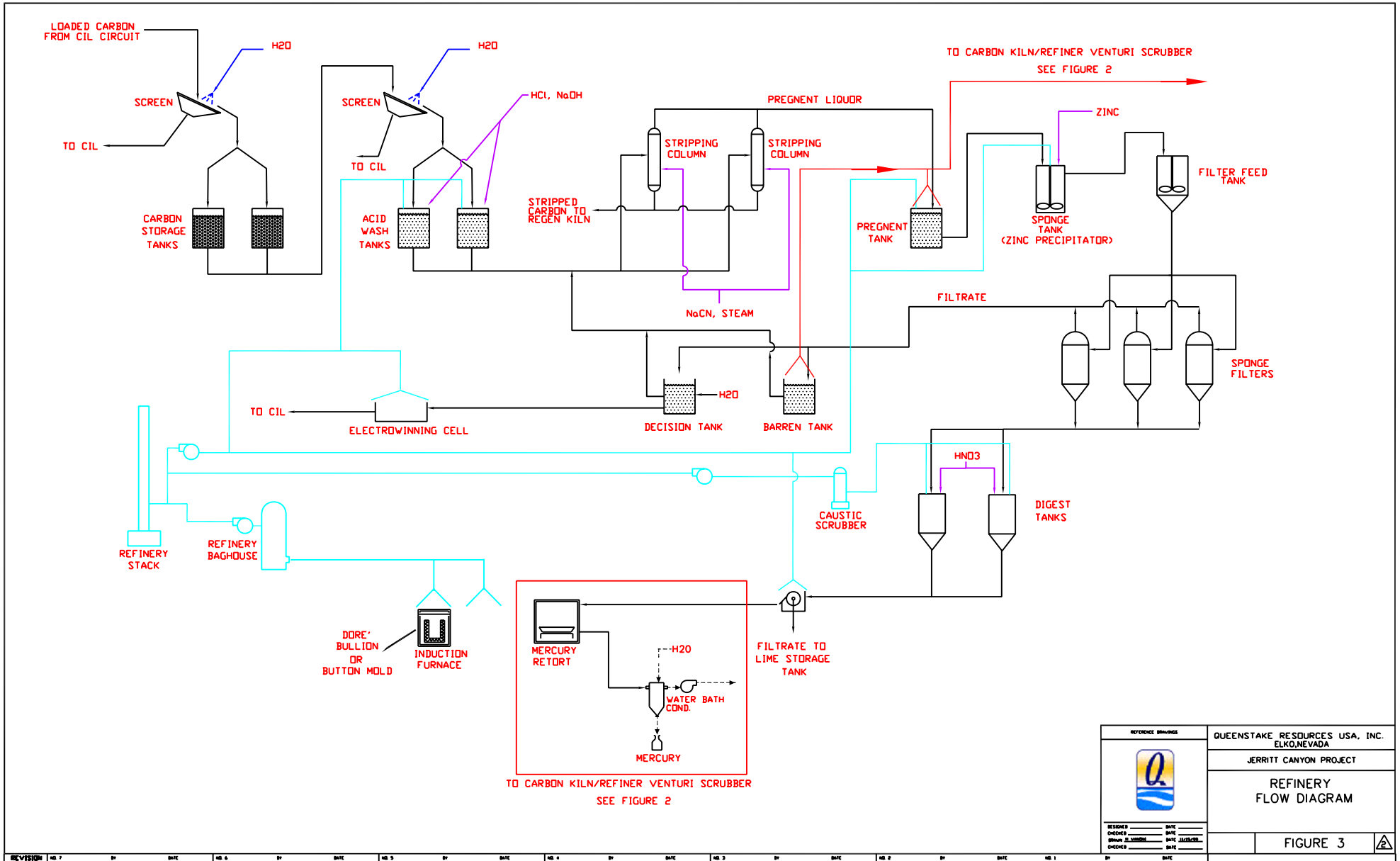
LOADED CARBON FROM CIL CIRCUIT
H2O
SCREEN
TO CIL
CARBON STORAGE TANKS
H2O
SCREEN
TO CIL
HCl, NaOH
ACID WASH TANKS
STRIPPED CARBON TO REGEN KILN
STRIPPING COLUMN
STRIPPING COLUMN
PREGNENT LIQUOR
TO CARBON KILN/REFINER VENTURI SCRUBBER
SEE FIGURE 2
ZINC
PREGNENT TANK
SPONGE TANK (ZINC PRECIPITATOR)
FILTER FEED TANK
NaCN, STEAM
FILTRATE
SPONGE FILTERS
TO CIL
ELECTROWINNING CELL
H2O
DECISION TANK
BARREN TANK
HNO3
CAUSTIC SCRUBBER
DIGEST TANKS
REFINERY STACK
REFINERY BAGHOUSE
DORE' BULLION OR BUTTON MOLD
INDUCTION FURNACE
MERCURY RETORT
H2O
WATER BATH COND.
MERCURY
FILTRATE TO LIME STORAGE TANK
TO CARBON KILN/REFINER VENTURI SCRUBBER
SEE FIGURE 2
REFERENCE DRAWINGS
QUEENSTAKE RESOURCES USA, INC.
ELKO,NEVADA
JERRITT CANYON PROJECT
REFINERY
FLOW DIAGRAM
FIGURE 3
REVISION
REMARKS