Precious Metals Recovery LLC
RCRA Permit Application
Dry Hills Facility | EPA ID# NVR000088542
Eureka County, Nevada

Prepared for:
Precious Metals Recovery LLC
460 W. 50 North, Suite 500
Salt Lake City, Utah 84101
Contact: Rich Haddock
Ph: 801.990.3773

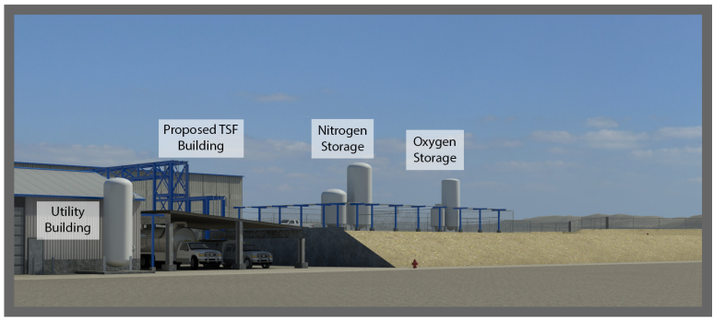

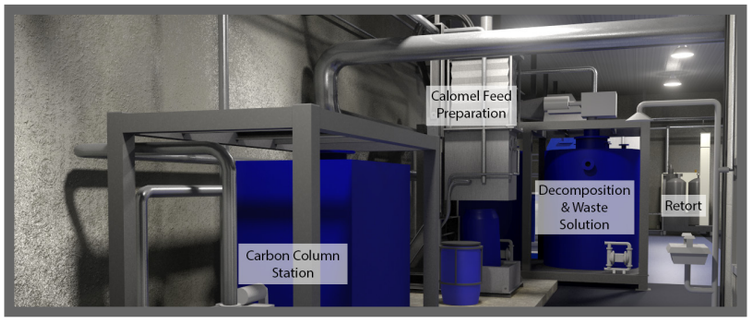

Prepared by: JBR Environmental Consultants, Inc.
8160 S. Highland Drive,
Sandy, Utah 84093
Contact: Rachel Shilton
Ph: 801.943.4144 Ext. 1133

creating solutions for today's environment

Hatch
2800 Speakman Drive
Mississauga, Ontario, Canada
Contact: Sonia Sennik
Ph: 905.403.4043

APPENDIX 1-A

Drawings

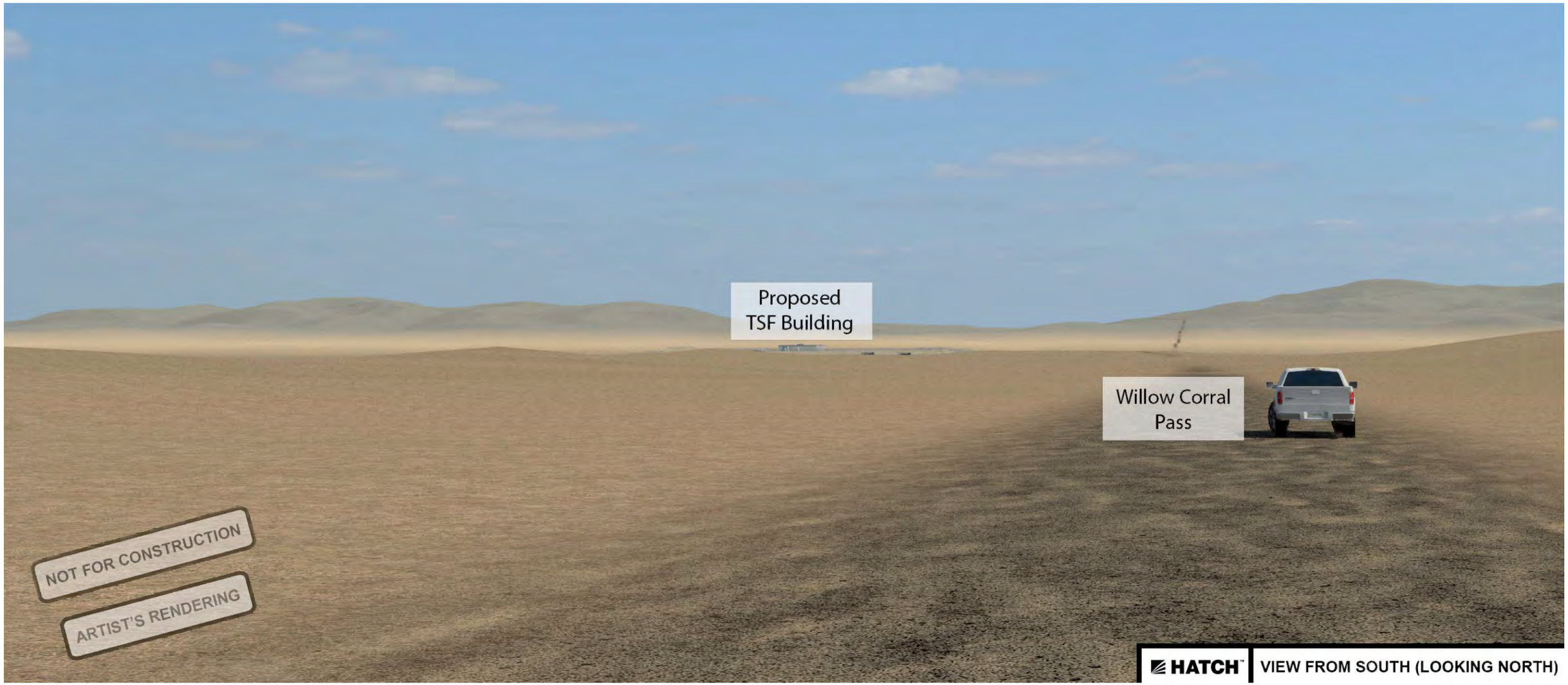
Proposed
TSF Building
Willow Corral
Pass
NOT FOR CONSTRUCTION
ARTIST'S RENDERING
HATCH
VIEW FROM SOUTH (LOOKING NORTH)

Oxygen Storage
Proposed TSF Building
NOT FOR CONSTRUCTION
ARTIST'S RENDERING
HATCH
VIEW FROM SOUTHEAST (LOOKING NORTHWEST)

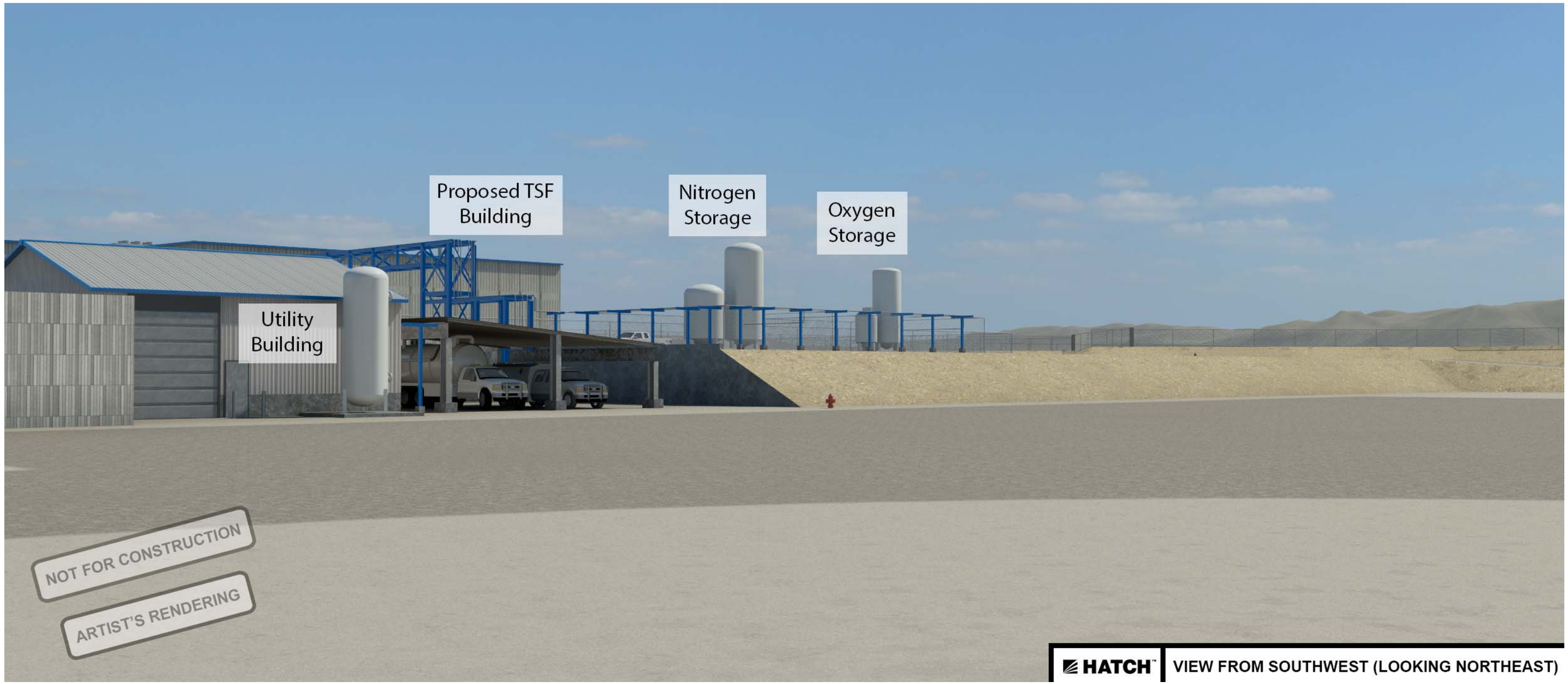
Proposed TSF Building
Nitrogen Storage
Oxygen Storage
Utility Building
NOT FOR CONSTRUCTION
ARTIST'S RENDERING
HATCH
VIEW FROM SOUTHWEST (LOOKING NORTHEAST)

Proposed
TSF Building
Security Berm
NOT FOR CONSTRUCTION
ARTIST'S RENDERING
HATCH
VIEW FROM EAST (LOOKING WEST)

NOT FOR CONSTRUCTION
ARTIST'S RENDERING
HATCH
ELEMENTAL MERCURY STORAGE AREA VIEW No. 1

NOT FOR CONSTRUCTION
ARTIST'S RENDERING
HATCH
ELEMENTAL MERCURY STORAGE AREA VIEW No. 2

HATCH™ PROCESS AREA VIEW No. 1

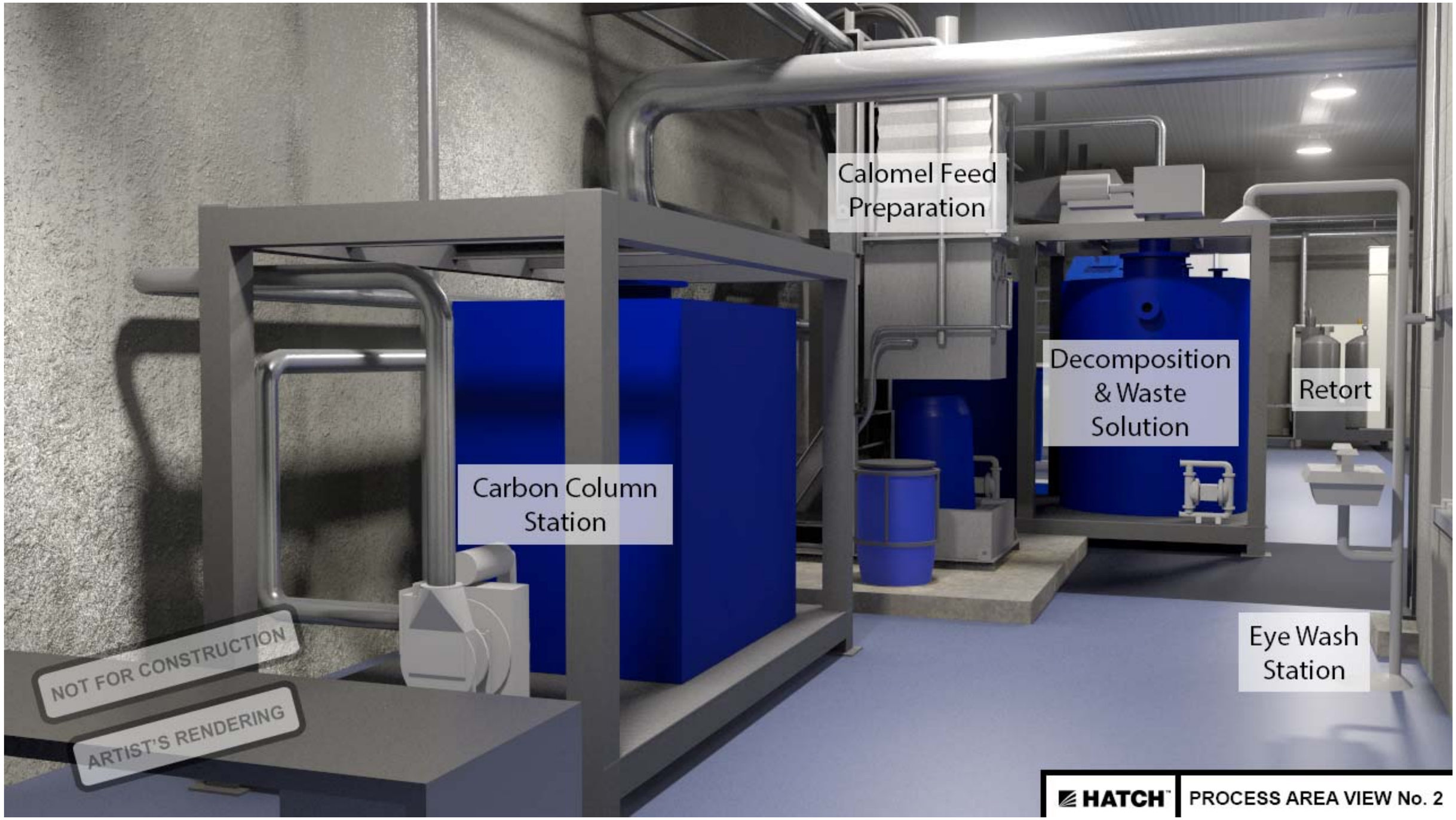
Calomel Feed Preparation
Decomposition & Waste Solution
Retort
Carbon Column Station
Eye Wash Station
NOT FOR CONSTRUCTION
ARTIST'S RENDERING
HATCH
PROCESS AREA VIEW No. 2

Filter Press
Hygiene Dust Collector
Carbon Filter
Retort
NOT FOR CONSTRUCTION
ARTIST'S RENDERING
HATCH
PROCESS AREA VIEW No. 3

Filter
Press
Decomposition
& Waste
Solution
NOT FOR CONSTRUCTION
ARTIST'S RENDERING
HATCH
PROCESS AREA VIEW No. 4

Calomel
Feed
Preparation
Carbon Column
Station
NOT FOR CONSTRUCTION
ARTIST'S RENDERING
HATCH
PROCESS AREA VIEW No. 5

DWG. NO. H340940-0000-07-015-0001

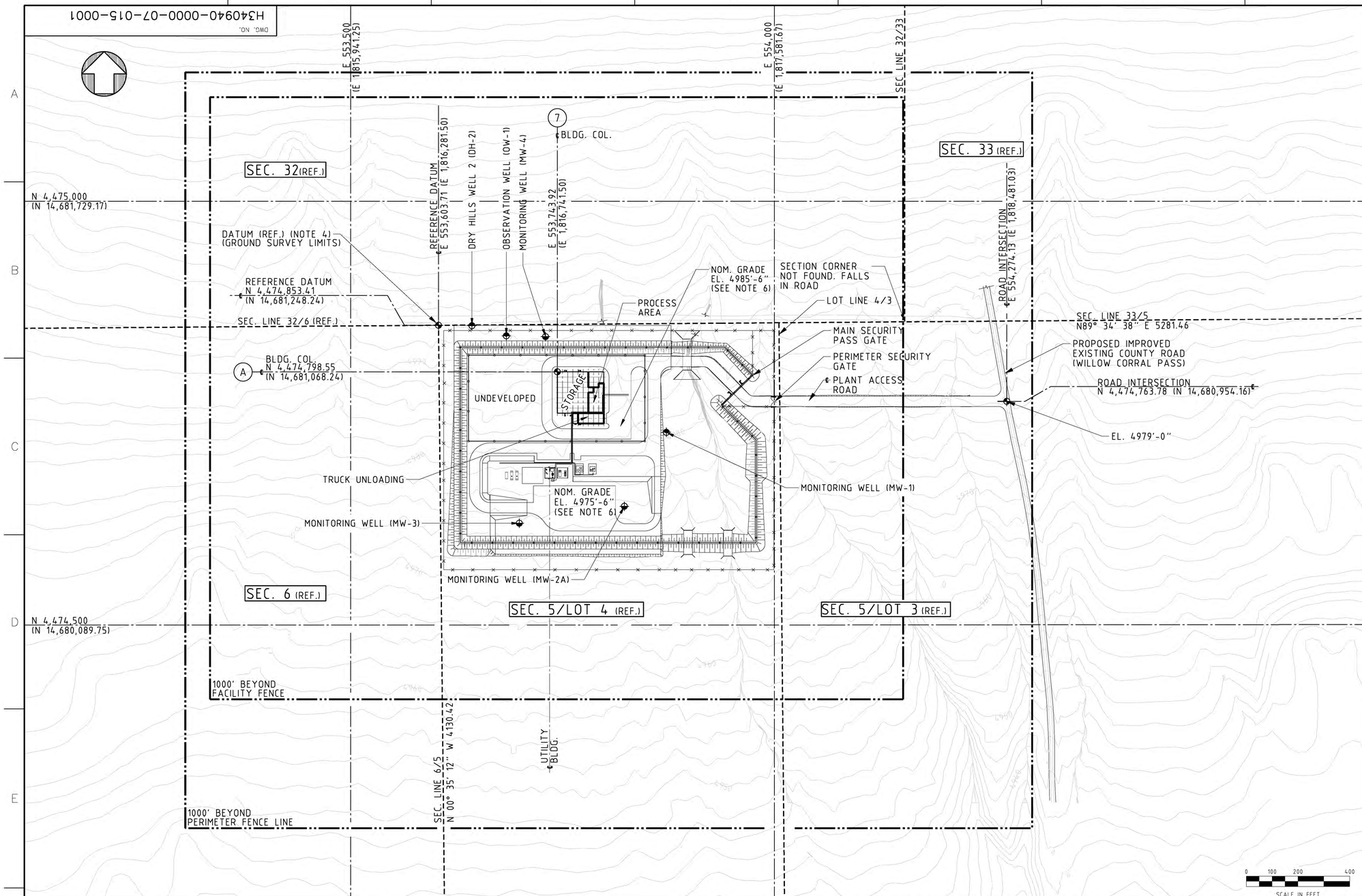

GENERAL NOTES:

1. ALL COORDINATES SHOWN ARE IN METERS (BRACKETED COORDINATES ARE IN U.S. SURVEY FEET).
2. ALL ELEVATIONS ARE IN FEET UNLESS NOTED OTHERWISE.
3. GRID COORDINATES SHOWN ARE BASED ON THE NORTH AMERICAN DATUM OF 1983, (UTM ZONE 11).
4. SURVEY COORDINATES AND ELEVATIONS SHOWN ARE AS RECORDED BY SUMMIT ENGINEERING (RYAN COOK - 08/24/2012).
5. WELL COORDINATES FOR MW-2A, MW-3 AND MW-4 AS PROVIDED BY JBR (09/26/2012).
6. NATURAL GRADE TOPOGRAPHIC INFORMATION (SUMMIT ENGINEERING SURVEY 08/24/2012) OVERLAYED ON THE ENGINEERED GRADE (NOM. GRADE EL. 4975'-6" & EL. 4985'-6")

WIND ROSE
STATION - CRESCENT VALLEY DEAN RANCH, NEVADA.

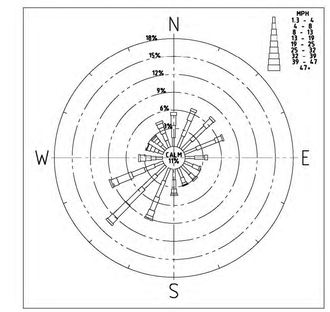

LEGEND:

- FACILITY FENCE
- PERIMETER FENCE LINE
- BERM FENCE
- BATTERY LIMIT
- SECTION\LOT LINE
- GRID COORDINATES
- TOPOGRAPHIC MAP BOUNDARY
- EXISTING WATER COURSE
- DATUM POINT
- GROUND SURVEY LIMITS
- WELL (SURVEY 08/24/2012)
- WELL (JBR 09/26/2012)

FOR INFORMATION
NOT FOR CONSTRUCTION

DRAWING NO.	DRAWING TITLE
REFERENCE DRAWINGS	

NO.	DESCRIPTION	BY	CHK'D	APP'D	DATE
REVISIONS					

REV.	ISSUE FOR	AUTH. BY		DATE
E	INFORMATION	EC	SS	14-12-2012
D	INFORMATION	EC	SS	29-11-2012
C	INFORMATION	EC	SS	15-11-2012
B	INFORMATION	EC	SS	14-11-2012
A	INFORMATION	EC	SS	25-10-2012

ISSUE AUTHORIZATION

HATCH™

DESIGNED BY J. CHALMERS DATE 25-10-2012	DRAWN BY E. CRAWFORD DATE 25-10-2012
CHECKED BY S. SENNIK DATE 25-10-2012	DISCIP. ENGR. R. FUKUZAWA DATE 25-10-2012
PROJ. DES. COORD. J. CHALMERS DATE 25-10-2012	PROJ. ENGR. S. SENNIK DATE 25-10-2012
PROJ. MGR. M. SUCHARDA DATE 25-10-2012	

PRECIOUS METALS RECOVERY LLC

PRECIOUS METALS RECOVERY LLC
DRY HILLS FACILITY PROJECT

DRY HILLS FACILITY
TOPOGRAPHIC MAP
(RCRA PERMIT APPLICATION)

SCALE 1"=200' OR AS NOTED

DWG. NO. H340940-0000-07-015-0001

REV. E

DWG. NO. H340940-0000-07-15-0002

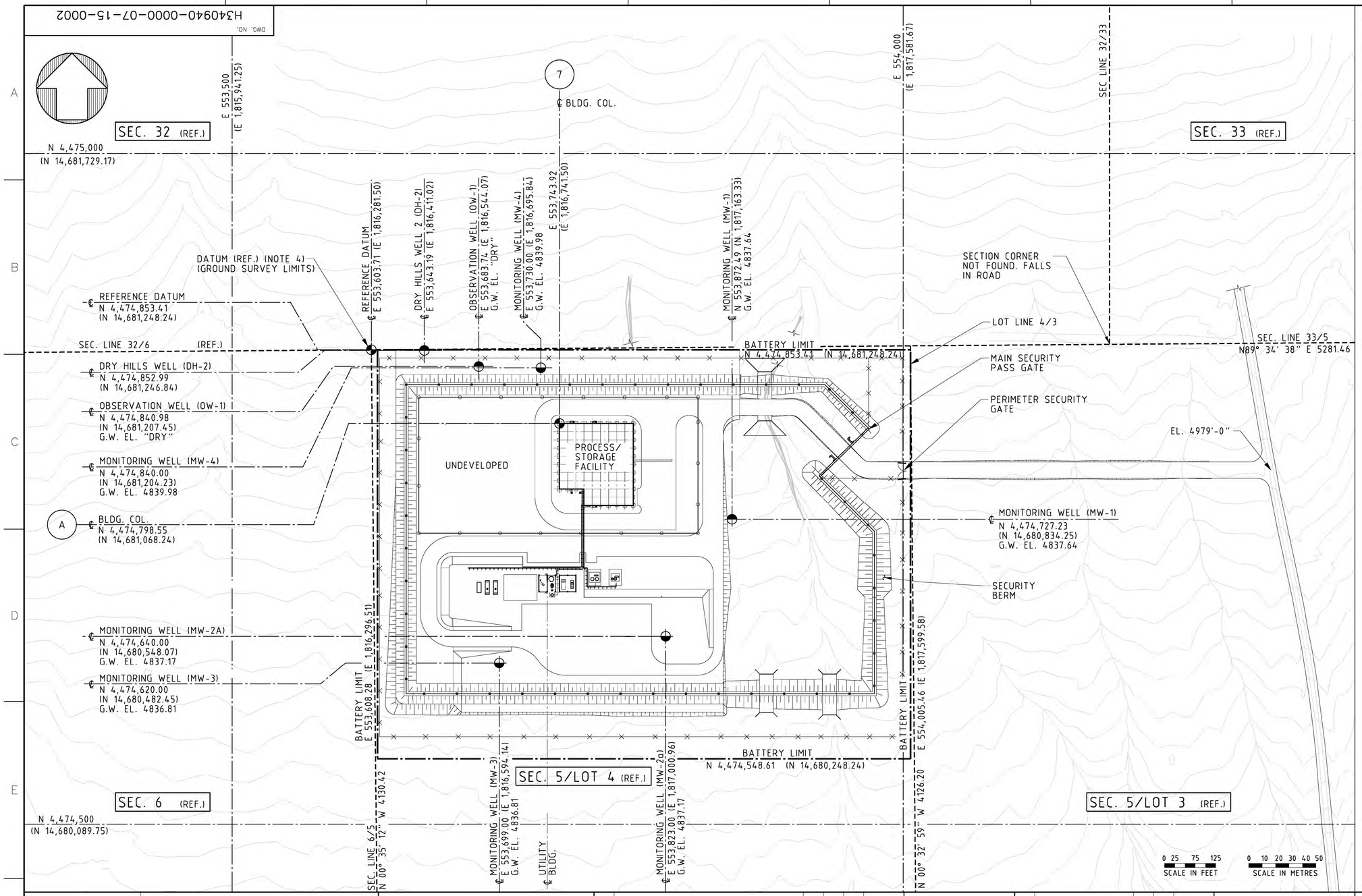

GENERAL NOTES:

1. ALL COORDINATES SHOWN ARE IN METERS (BRACKETED COORDINATES ARE IN U.S. SURVEY FEET).
2. ALL ELEVATIONS ARE IN FEET UNLESS NOTED OTHERWISE.
3. GRID COORDINATES SHOWN ARE BASED ON THE NORTH AMERICAN DATUM OF 1983, (UTM ZONE 11).
4. SURVEY COORDINATES AND ELEVATIONS SHOWN ARE AS RECORDED BY SUMMIT ENGINEERING (RYAN COOK - 08/24/2012).
5. WELL COORDINATES FOR MW-2A, MW-3 AND MW-4 AS PROVIDED BY JBR (09/26/2012).
6. ALL WELL ELEVATIONS ARE GROUND WATER ELEVATIONS IN FEET AS PROVIDED BY JBR (11/09/2012).

LEGEND:

- FACILITY FENCE
- PERIMETER FENCE LINE
- BERM FENCE
- BATTERY LIMIT
- SECTION\LOT LINE
- GRID COORDINATES
- DATUM POINT
- WELL (SURVEY 08/24/2012)
- WELL (JBR 09/26/2012)

FOR INFORMATION
NOT FOR CONSTRUCTION

DRAWING NO.	DRAWING TITLE
REFERENCE DRAWINGS	

NO.	DESCRIPTION	BY	CHK'D	APP'D	DATE
REVISIONS					

REV.	ISSUE FOR	AUTH. BY	DATE
D	PERMIT INFORMATION	R.F.	S.S. 2012-12-14
C	PERMIT INFORMATION	R.F.	S.S. 2012-11-19
B	PERMIT INFORMATION	R.F.	S.S. 2012-11-15
A	PERMIT INFORMATION	R.F.	S.S. 2012-11-12

ISSUE AUTHORIZATION

HATCH™

DESIGNED BY J. CHALMERS DATE 2012-11-12	DRAWN BY E. CRAWFORD DATE 2012-11-12
CHECKED BY J. CHALMERS DATE 2012-11-12	DISCIP. ENGR. R. FUKUZAWA DATE 2012-11-12
PROJ. DES. COORD. J. CHALMERS DATE 2012-11-12	PROJ. ENGR. S. SENNIK DATE 2012-11-12
PROJ. MGR. M. SUCHARDA DATE 2012-11-12	

PRECIOUS METALS RECOVERY LLC

PRECIOUS METALS RECOVERY LLC
DRY HILLS FACILITY PROJECT

FIGURE 2
MONITORING WELL LOCATIONS

SCALE 1:1500 OR AS NOTED

DWG. NO. H340940-0000-07-15-0002

REV. D

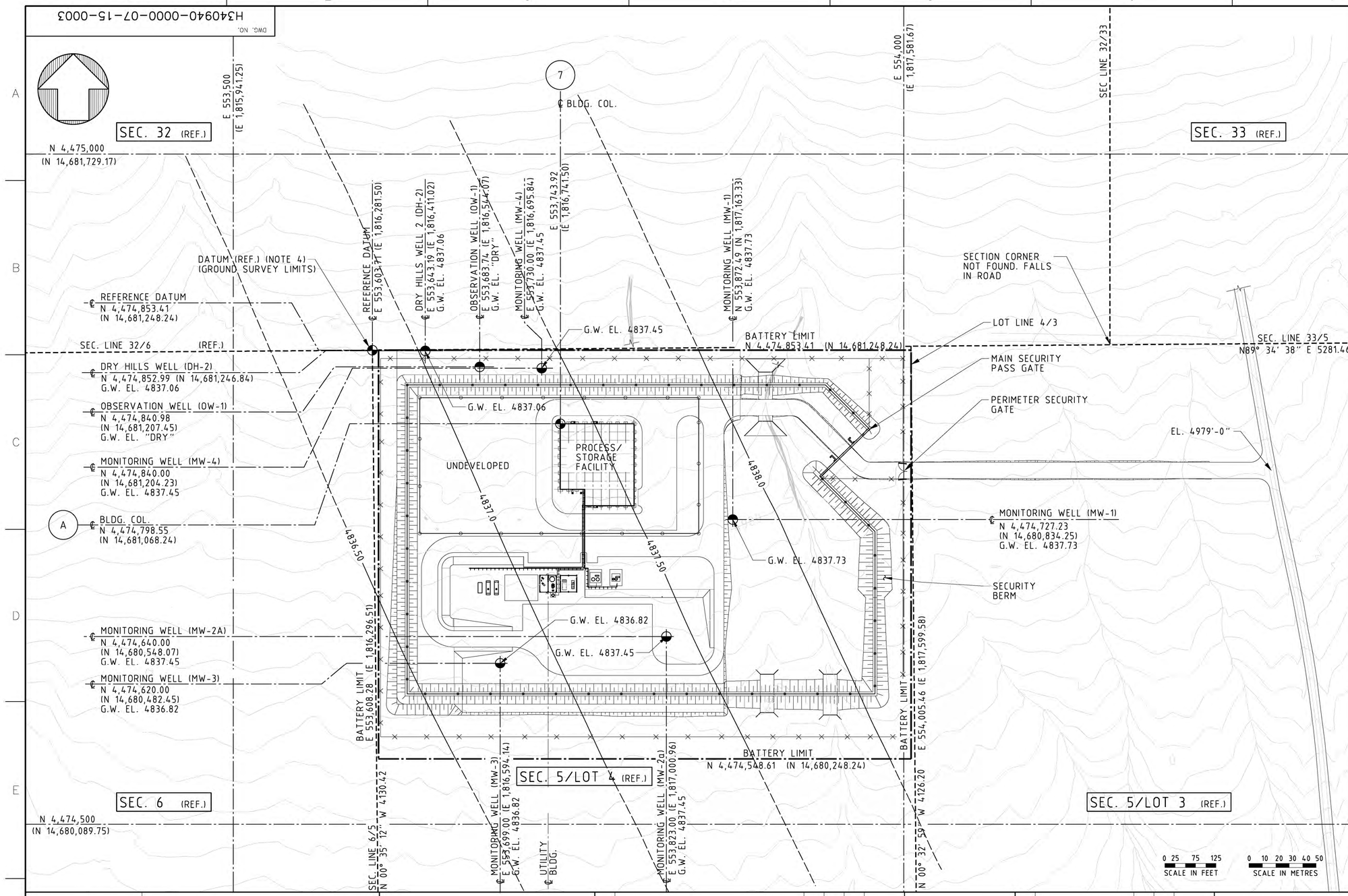

GENERAL NOTES:

1. ALL COORDINATES SHOWN ARE IN METERS (BRACKETED COORDINATES ARE IN U.S. SURVEY FEET).
2. ALL ELEVATIONS ARE IN FEET UNLESS NOTED OTHERWISE.
3. GRID COORDINATES SHOWN ARE BASED ON THE NORTH AMERICAN DATUM OF 1983, (UTM ZONE 11).
4. SURVEY COORDINATES AND ELEVATIONS SHOWN ARE AS RECORDED BY SUMMIT ENGINEERING (RYAN COOK - 08/24/2012).
5. WELL COORDINATES FOR MW-2A, MW-3 AND MW-4 AS PROVIDED BY JBR (09/26/2012).
6. ALL WELL ELEVATIONS ARE GROUND WATER ELEVATIONS IN FEET AMSL AS PROVIDED BY JBR (11/29/2012).

LEGEND:

- FACILITY FENCE
- PERIMETER FENCE LINE
- BERM FENCE
- BATTERY LIMIT
- SECTION\LOT LINE
- GRID COORDINATES
- DATUM POINT
- WELL (SURVEY 08/24/2012)
- WELL (JBR 09/26/2012)

FOR INFORMATION
NOT FOR CONSTRUCTION

DWG. NO. H340940-0000-07-15-0003

DRAWING NO.	DRAWING TITLE
REFERENCE DRAWINGS	

NO.	DESCRIPTION	BY	CHK'D	APP'D	DATE
REVISIONS					

REV.	ISSUE FOR	AUTH. BY		DATE
D	PERMIT INFORMATION	R.F.	S.S.	2012-12-14
C	PERMIT INFORMATION	R.F.	S.S.	2012-11-29
B	PERMIT INFORMATION	R.F.	S.S.	2012-11-19
A	PERMIT INFORMATION	R.F.	S.S.	2012-11-15

ISSUE AUTHORIZATION

HATCH™

DESIGNED BY J. CHALMERS DATE 2012-11-12	DRAWN BY E. CRAWFORD DATE 2012-11-12
CHECKED BY J. CHALMERS DATE 2012-11-12	DISCIP. ENGR. R. FUKUZAWA DATE 2012-11-12
PROJ. DES. COORD. J. CHALMERS DATE 2012-11-12	PROJ. ENGR. S. SENNIK DATE 2012-11-12
PROJ. MGR. M. SUCHARDA DATE 2012-11-12	

PRECIOUS METALS RECOVERY LLC

PRECIOUS METALS RECOVERY LLC
DRY HILLS FACILITY PROJECT

FIGURE 3
GROUNDWATER ELEVATION CONTOUR MAP

SCALE 1:1500 OR AS NOTED

DWG. NO. H340940-0000-07-15-0003

REV. D

DWG. NO. H340940-0000-07-015-0004

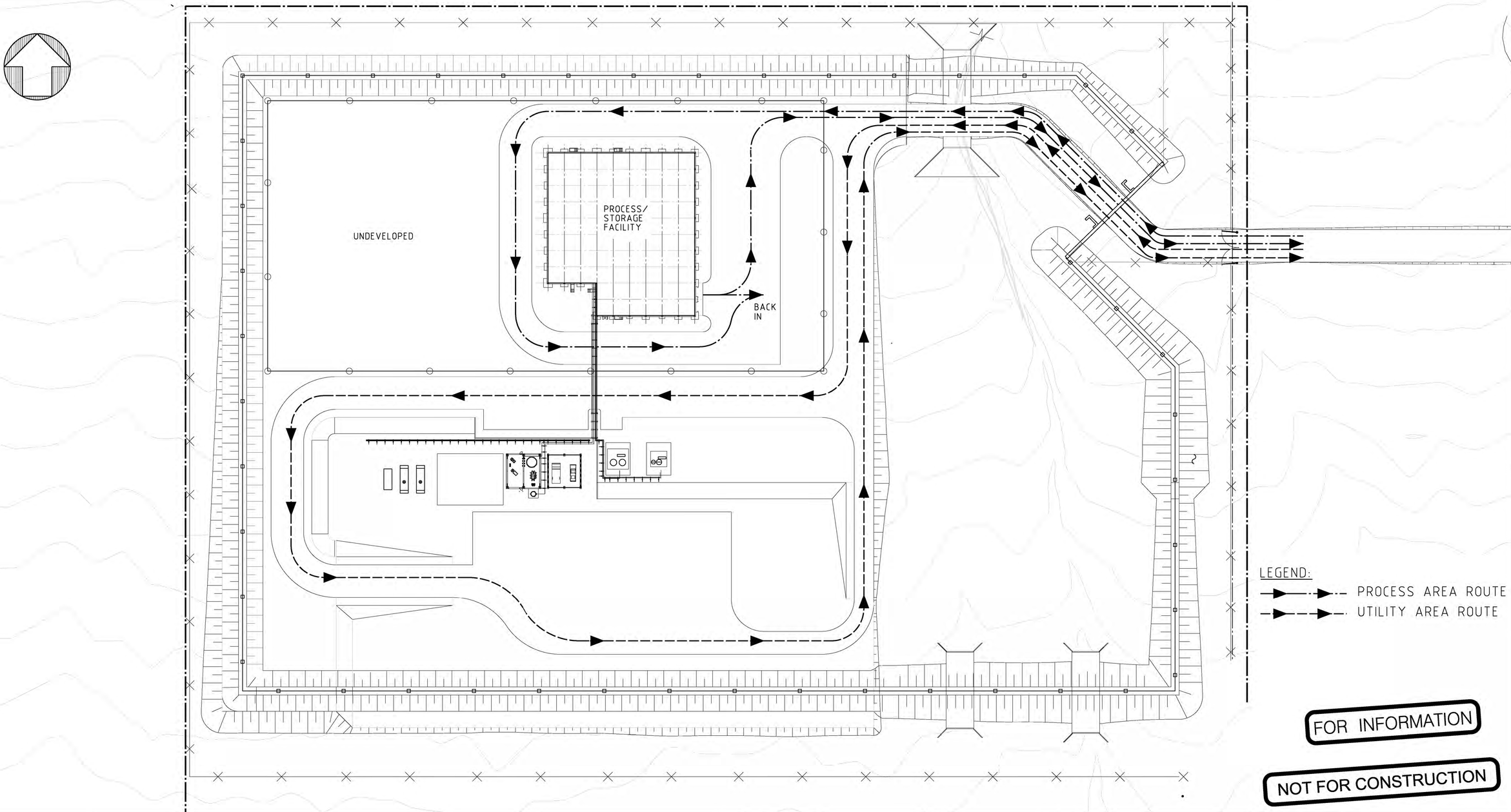

DRAWING NO.	DRAWING TITLE
REFERENCE DRAWINGS	

NO.	DESCRIPTION	BY	CHK'D	APP'D	DATE
REVISIONS					

REV.	ISSUE FOR	AUTH. BY		DATE
B	PERMIT INFORMATION	RF	SS	2012-12-14
A	PERMIT INFORMATION	RF	SS	2012-11-15
ISSUE AUTHORIZATION				

HATCH™

DESIGNED BY J. CHALMERS DATE 2012-11-15	DRAWN BY D. ROTH DATE 2012-11-15
CHECKED BY J. CHALMERS DATE 2012-11-15	DISCIP. ENGR. R. FUKUZAWA DATE 2012-11-15
PROJ. DES. COORD. J. CHALMERS DATE 2012-11-15	PROJ. ENGR. S. SENNIK DATE 2012-11-15
PROJ. MGR. M. SUCHARDA DATE 2012-11-15	

PRECIOUS METALS RECOVERY LLC

PRECIOUS METALS RECOVERY LLC
DRY HILLS FACILITY PROJECT

DRY HILLS FACILITY
TRAFFIC FLOW DIAGRAM

SCALE 1" = 60' OR AS NOTED

DWG. NO. H340940-0000-07-015-0004

REV. B

DWG. NO. H340940-0000-50-014-0001

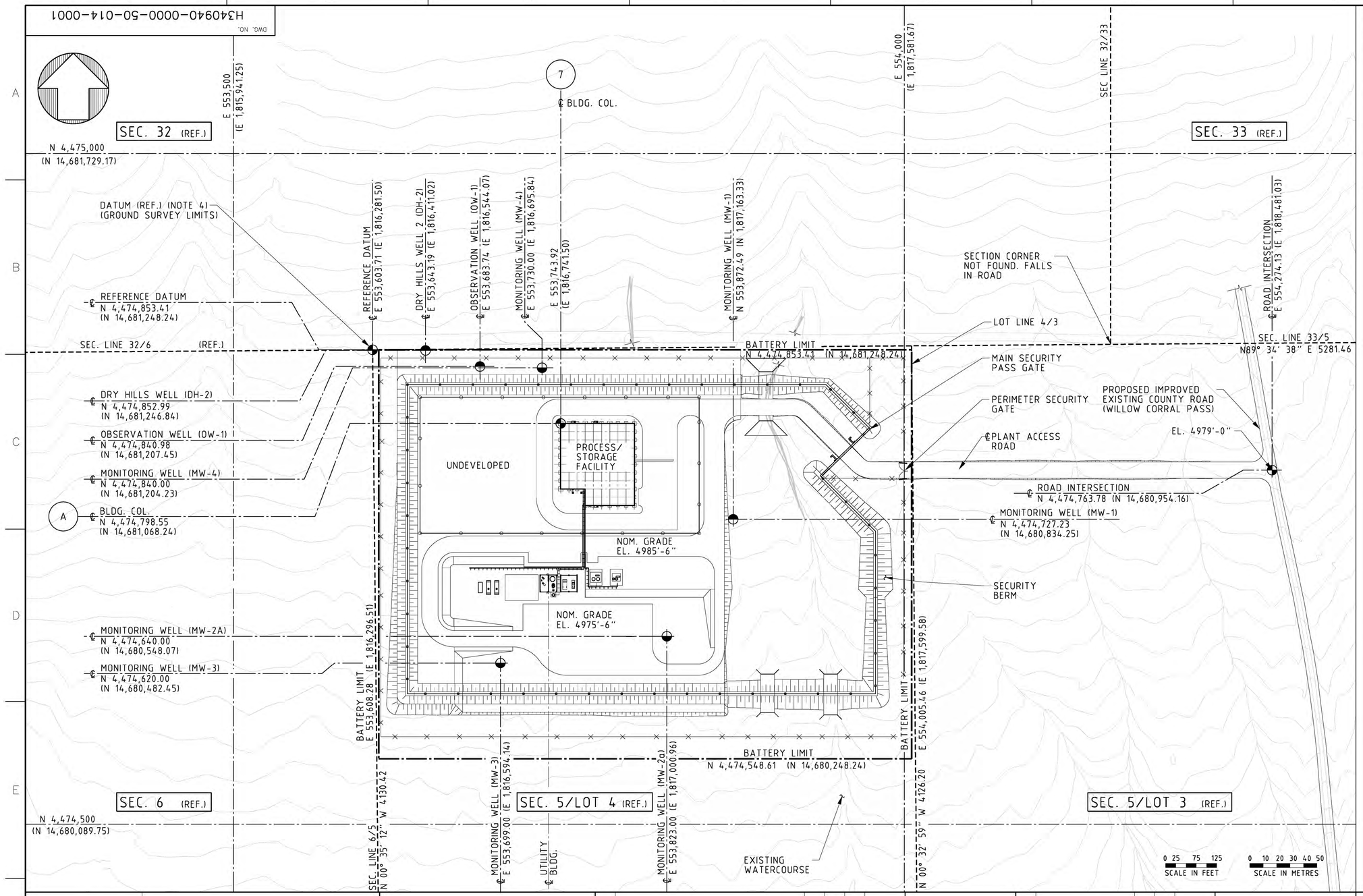

GENERAL NOTES:

1. ALL COORDINATES SHOWN ARE IN METERS (BRACKETED COORDINATES ARE IN U.S. SURVEY FEET).
2. ALL ELEVATIONS ARE IN FEET UNLESS NOTED OTHERWISE.
3. GRID COORDINATES SHOWN ARE BASED ON THE NORTH AMERICAN DATUM OF 1983, (UTM ZONE 11).
4. SURVEY COORDINATES AND ELEVATIONS SHOWN ARE AS RECORDED BY SUMMIT ENGINEERING (RYAN COOK - 08/24/2012).
5. WELL COORDINATES FOR MW-2A, MW-3 AND MW-4 AS PROVIDED BY JBR (09/26/2012).

WIND ROSE

STATION - CRESCENT VALLEY DEAN RANCH, NEVADA.

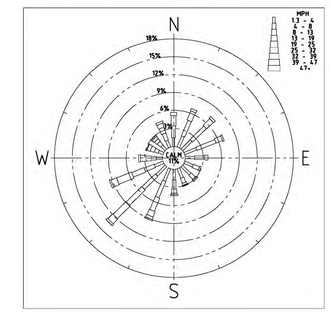

LEGEND:

- FACILITY FENCE
- PERIMETER FENCE LINE
- BERM FENCE
- BATTERY LIMIT
- SECTION\LOT LINE
- GRID COORDINATES
- EXISTING WATER COURSE
- DATUM POINT
- GROUND SURVEY LIMITS
- WELL (SURVEY 08/24/2012)
- WELL (JBR 09/26/2012)

FOR INFORMATION
NOT FOR CONSTRUCTION

DRAWING NO.	DRAWING TITLE

REFERENCE DRAWINGS

NO.	DESCRIPTION	BY	CHK'D	APP'D	DATE

REVISIONS

REV.	ISSUE FOR	AUTH. BY		DATE
H	ISSUE FOR DESIGN	E.C.	S.S.	2012-12-14
G	ISSUE FOR DESIGN	J.C.	S.S.	2012-11-29
F	ISSUE FOR DESIGN	J.C.	S.S.	2012-11-14
E	ISSUE FOR DESIGN	J.C.	S.S.	2012-10-11
D	FS FINAL REPORT	J.C.	S.S.	2012-07-30
C	FS FINAL REPORT	J.C.	S.S.	2012-07-05
B	DISCIPLINE ENGINEERING	J.C.	S.S.	2012-06-18
A	CLIENT REVIEW	J.C.	S.S.	2012-05-28

ISSUE AUTHORIZATION

HATCH™

DESIGNED BY J. CHALMERS DATE 2012-05-28	DRAWN BY D. EAILEY DATE 2012-05-28
CHECKED BY J. CHALMERS DATE 2012-05-28	DISCIP. ENGR. D. KLUWAK DATE 2012-05-28
PROJ. DES. COORD. J. CHALMERS DATE 2012-05-28	PROJ. ENGR. S. SENNIK DATE 2012-05-28
PROJ. MGR. M. SUCHARDA DATE 2012-05-28	

PRECIOUS METALS RECOVERY LLC

PRECIOUS METALS RECOVERY LLC
DRY HILLS FACILITY PROJECT

DRY HILLS FACILITY
OVERALL SITE PLAN

SCALE 1:1500 OR AS NOTED

DWG. NO. H340940-0000-50-014-0001

REV. H

DWG. NO. H340940-0000-50-014-0002

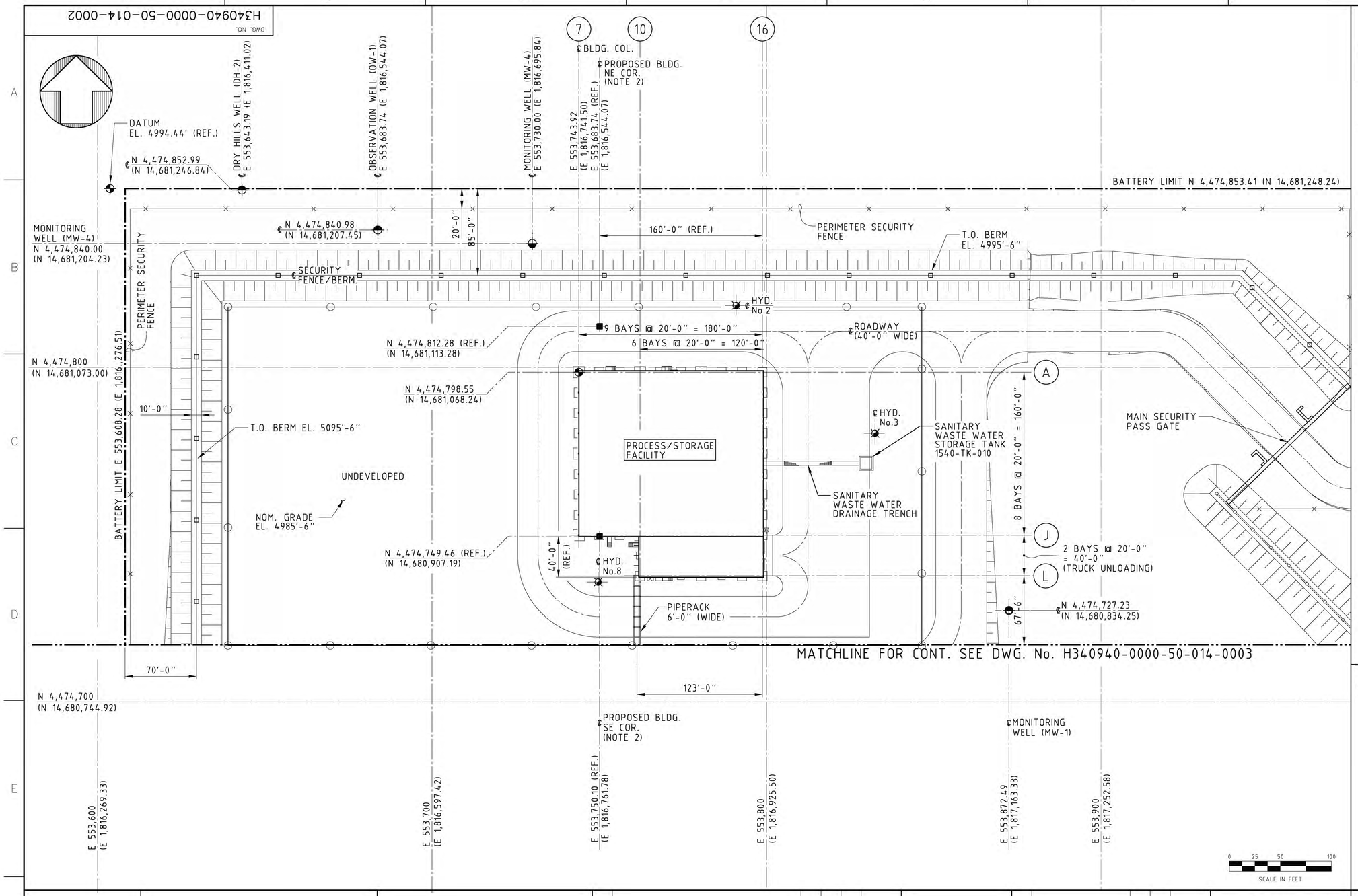

NOTES:

1. FOR GENERAL NOTES SEE DWG. H340940-0000-50-014-0001.
2. SURVEY COORDINATES AND ELEVATIONS SHOWN ARE AS RECORDED BY SUMMIT ENGINEERING (RYAN COOK - 08/24/2012).
3. WELL COODINATES FOR MW-2A, MW-3 AND MW-4 AS PROVIDED BY JBR (09/26/2012).

LEGEND:

- FACILITY FENCE
- PERIMETER FENCE LINE
- BERM FENCE
- BATTERY LIMIT
- ROADS
- FIRE HYDRANT AND HOSE BOX
- DATUM POINT
- WELL (SURVEY 08/24/2012)
- SURVEY POINTS (AUG 24)
- WELL (JBR 09/26/2012)

FOR INFORMATION
NOT FOR CONSTRUCTION

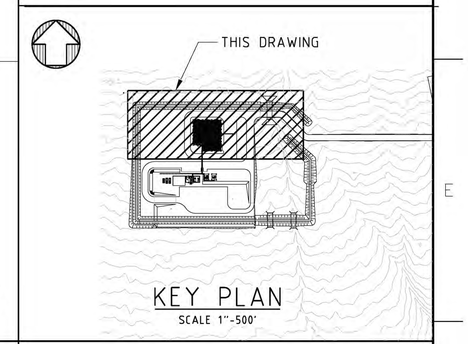

KEY PLAN
SCALE 1"=500'

DRAWING NO.	DRAWING TITLE
H340940-0000-50-014-0003	AREA PLOT PLAN
H340940-0000-50-014-0001	OVERALL SITE PLAN

REFERENCE DRAWINGS

NO.	DESCRIPTION	BY	CHK'D	APP'D	DATE

REVISIONS

REV.	ISSUE FOR	AUTH. BY		DATE
H	ISSUE FOR DESIGN	E.C.	S.S.	2012-12-14
G	ISSUE FOR DESIGN	J.C.	S.S.	2012-11-14
F	ISSUE FOR DESIGN	J.C.	S.S.	2012-10-17
E	FOR WELL LOCATIONS (JBR)	J.C.	S.S.	2012-09-11
D	FS FINAL REPORT	J.C.	S.S.	2012-07-30
C	FS FINAL REPORT	J.C.	S.S.	2012-07-05
B	DISCIPLINE ENGINEERING	J.C.	S.S.	2012-06-18
A	CLIENT REVIEW	J.C.	S.S.	2012-05-28

ISSUE AUTHORIZATION

HATCH™

DESIGNED BY J. CHALMERS DATE 2012-05-28
DRAWN BY K. AWAN DATE 2012-05-28
CHECKED BY S. SENNIK DATE 2012-05-28
DISCIP. ENGR. D. KLUWAK DATE 2012-05-28
PROJ. DES. COORD. J. CHALMERS DATE 2012-05-28
PROJ. ENGR. S. SENNIK DATE 2012-05-28
PROJ. MGR. M. SUCHARDA DATE 2012-05-28

PRECIOUS METALS RECOVERY LLC

PRECIOUS METALS RECOVERY LLC
DRY HILLS FACILITY PROJECT

DRY HILLS FACILITY
PROCESS AREA
PLOT PLAN

SCALE 1"=50' OR AS NOTED

DWG. NO. H340940-0000-50-014-0002

REV. H

DWG. NO. H340940-0000-50-014-0003

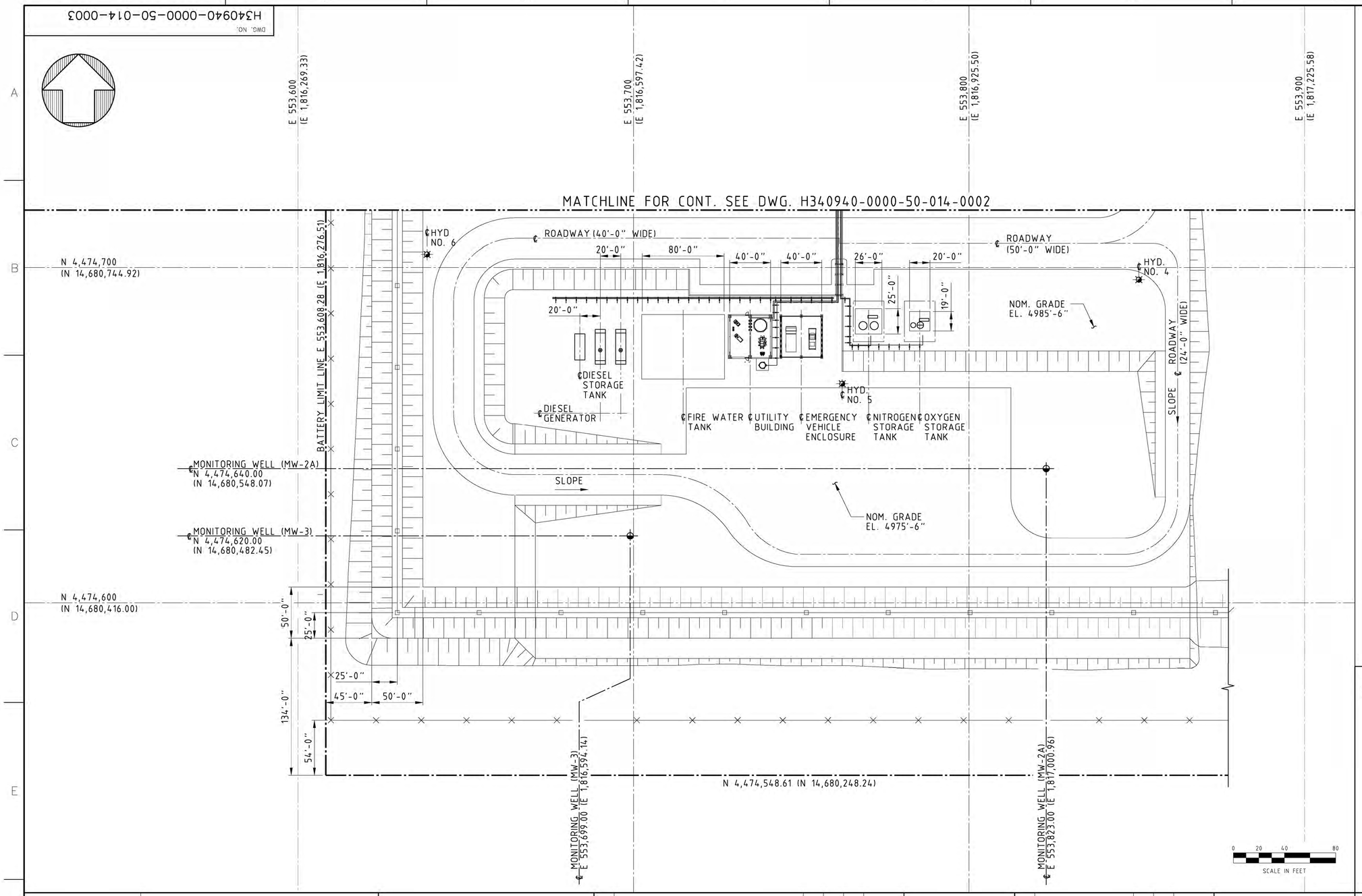

NOTES:

1. FOR GENERAL NOTES SEE DWG. H340940-0000-50-014-0001.

LEGEND:

- PERIMETER FENCE LINE
- BERM FENCE
- BATTERY LIMIT
- ROADS
- FIRE HYDRANT AND HOSE BOX
- DATUM POINT
- WELL (JBR 09/26/2012)

FOR INFORMATION
NOT FOR CONSTRUCTION

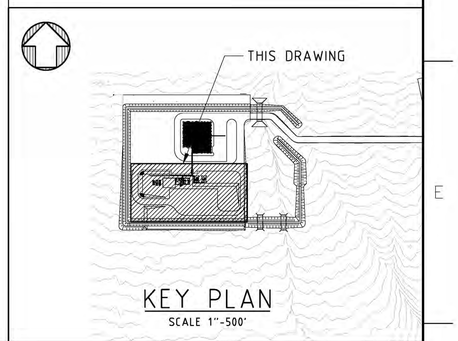

KEY PLAN
SCALE 1"=500'

DRAWING NO.	DRAWING TITLE
H340940-0000-50-014-0002	PROCESS AREA PLOT PLAN
H340940-0000-50-014-0001	OVERALL SITE PLAN

REFERENCE DRAWINGS

NO.	DESCRIPTION	BY	CHK'D	APP'D	DATE

REVISIONS

REV.	ISSUE FOR	AUTH. BY		DATE
G	ISSUE FOR DESIGN	E.C.	S.S.	2012-12-14
F	ISSUE FOR DESIGN	E.C.	S.S.	2012-11-14
E	ISSUE FOR DESIGN	J.C.	S.S.	2012-10-11
D	FS FINAL REPORT	J.C.	S.S.	2012-09-12
C	FS FINAL REPORT	J.C.	S.S.	2012-07-30
B	FS FINAL REPORT	J.C.	S.S.	2012-07-05
A	DISCIPLINE ENGINEERING	J.C.	L.Z.	2012-06-18

ISSUE AUTHORIZATION

HATCH™

DESIGNED BY J. CHALMERS DATE 2012-06-18	DRAWN BY K. AWAN DATE 2012-06-18
CHECKED BY J. CHALMERS DATE 2012-06-18	DISCIP. ENGR. D. KLUWAK DATE 2012-06-18
PROJ. DES. COORD. J. CHALMERS DATE 2012-06-18	PROJ. ENGR. S. SENNIK DATE 2012-06-18
PROJ. MGR. M. SUCHARDA DATE 2012-06-18	

PRECIOUS METALS RECOVERY LLC

PRECIOUS METALS RECOVERY LLC
DRY HILLS FACILITY PROJECT

DRY HILLS FACILITY
AREA PLOT PLAN

SCALE 1"=50' OR AS NOTED

DWG. NO. H340940-0000-50-014-0003

REV. G

DWG. NO. H340940-0000-50-015-0008

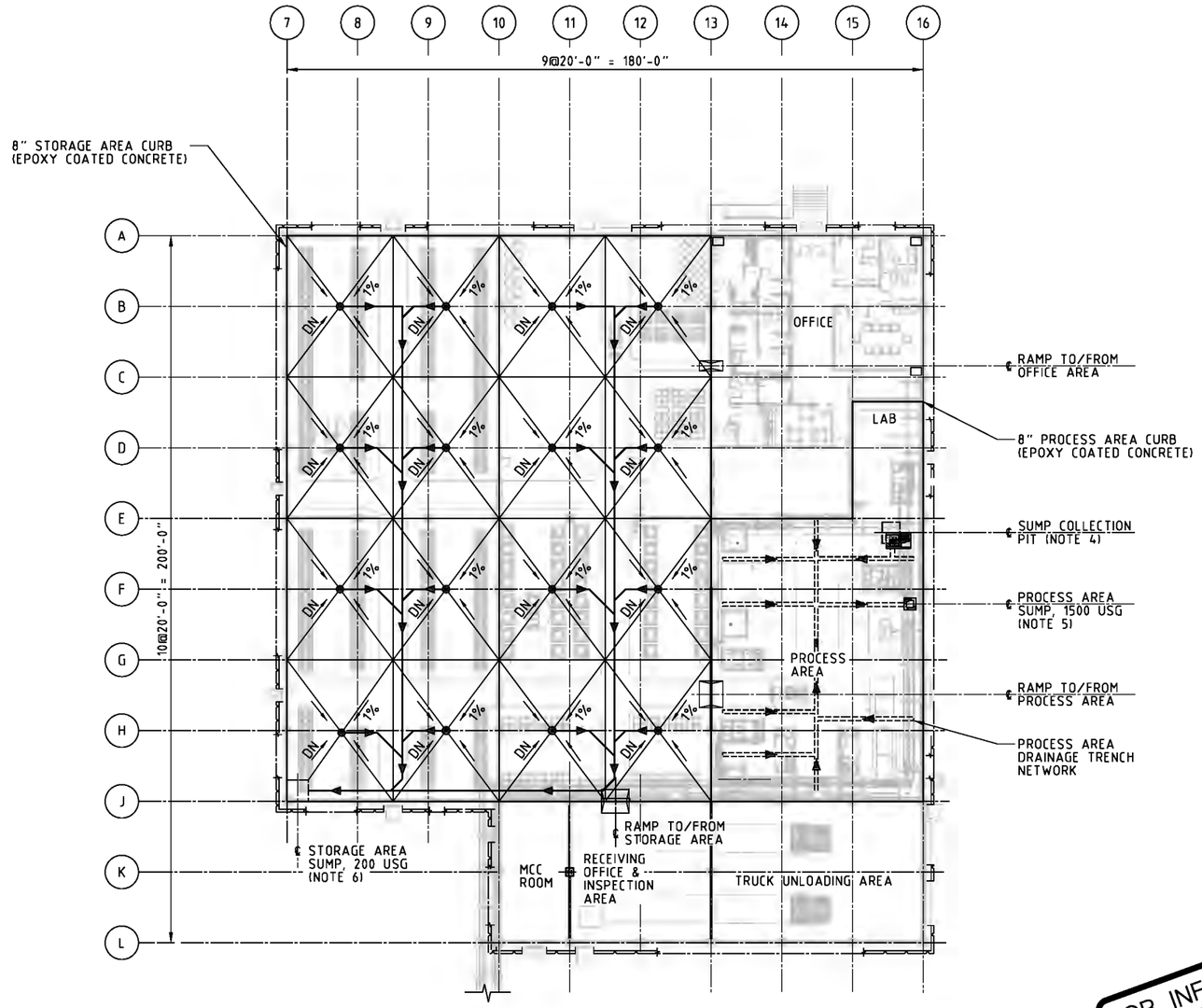

PLAN @ FIN. FLR
EL. 4989-6"

NOTES:

1. 95,750 USG (CONCRETE BUNDED VOLUME, STORAGE AREA)
2. 26,900 USG (CONCRETE BUNDED VOLUME, PROCESS AREA)
3. CURBED PROCESS AREA REPRESENTS FOURTH LEVEL OF CONTAINMENT FOR NaOH, HCl AND ALL MERCURY CONTAINING LIQUIDS OR SLURRIES WITHIN THE PROCESS AREA.

   LEVELS OF CONTAINMENT:

   1.) TANKS
   2.) FRP BUNDS
   3.) SUMP
   4.) CONCRETE BUNDING & TRENCH NETWORK
4. SUMP COLLECTION PIT FOR CALOMEL FEED PREPARATION STATION IS PART OF CUSTOM DESIGNED SKID AND ABOVE FINISHED FLOOR ELEVATION.
5. PROCESS AREA SUMP VOLUME (1500 USG) INCLUDES DRAINAGE TRENCH NETWORK VOLUME.
6. STORAGE AREA SUMP (200 USG VOLUME) WITH DEDICATED SUMP PUMP.

FOR INFORMATION
NOT FOR CONSTRUCTION

0 10 20 40
SCALE IN FEET

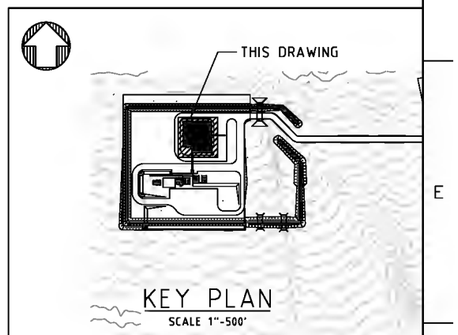

KEY PLAN
SCALE 1"=500'

DRAWING NO.	DRAWING TITLE
H340940-0000-50-014-0002	PROCESS AREA PLOT PLAN
H340940-0000-50-014-0001	OVERALL SITE PLAN

REFERENCE DRAWINGS

NO.	DESCRIPTION	BY	CHK'D	APP'D	DATE

REVISIONS

REV.	ISSUE FOR	AUTH. BY		DATE
E	FOR INFORMATION	B.J.	S.S.	2013-07-18
D	FOR INFORMATION	E.C.	S.S.	2012-12-14
C	FOR INFORMATION	E.C.	S.S.	2012-11-14
B	FOR INFORMATION	D.E.	D.K.	2012-10-18
A	FOR INFORMATION	D.E.	D.K.	2012-10-11

ISSUE AUTHORIZATION

HATCH™

DESIGNED BY J. CHALMERS DATE 2012-10-11	DRAWN BY D. EAILEY DATE 2012-10-11
CHECKED BY J. CHALMERS DATE 2012-10-11	DISCIP. ENGR. D. KLUWAK DATE 2012-10-11
PROJ. DES. COORD. J. CHALMERS DATE 2012-10-11	PROJ. ENGR. S. SENNIK DATE 2012-10-11
PROJ. MGR. M. SUCHARDA DATE 2012-10-11	

PRECIOUS METALS RECOVERY LLC

PRECIOUS METALS RECOVERY LLC
DRY HILLS FACILITY PROJECT

DRY HILLS FACILITY
PROCESS/STORAGE BUILDING
DRAINAGE ARRANGEMENT

SCALE 1' = 20' OR AS NOTED | DWG. NO. H340940-0000-50-015-0008 | REV. E

DWG. NO. H340940-0000-50-015-0009

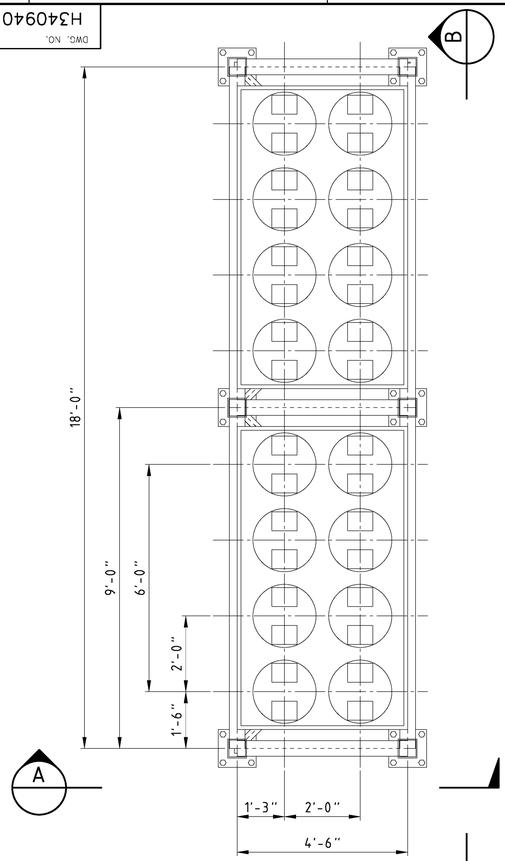

PLAN VIEW

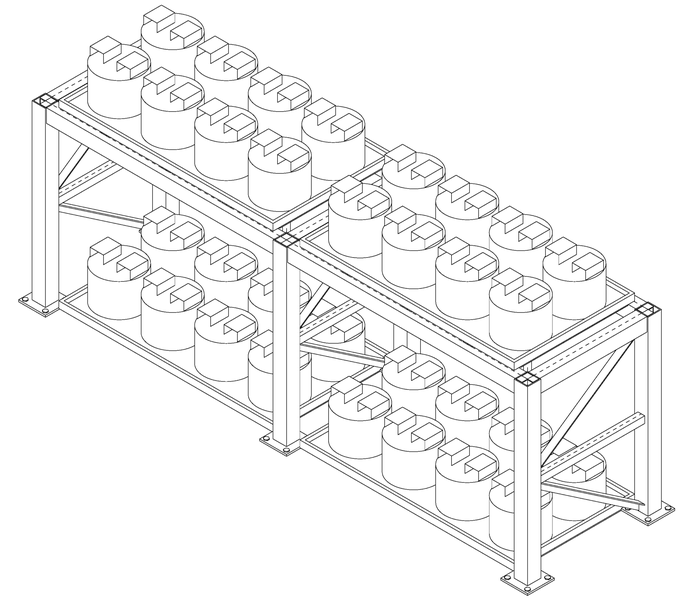

ISOMETRIC VIEW

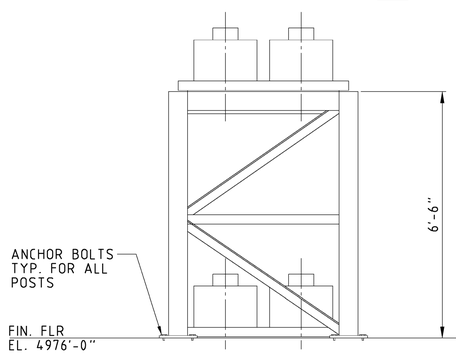

VIEW A-A

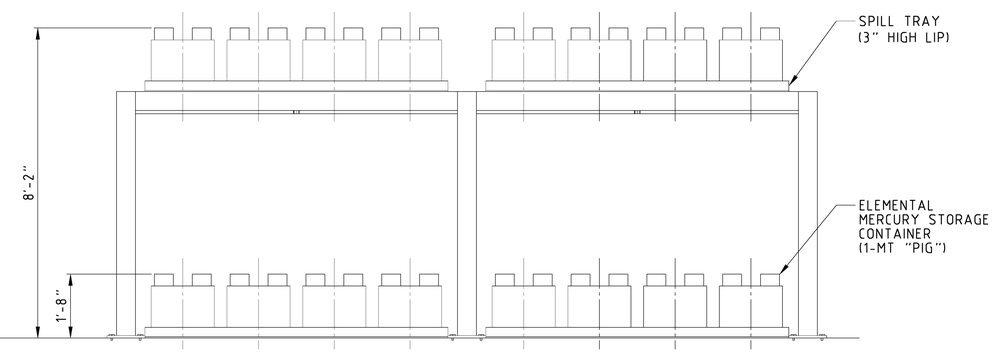

VIEW B-B

0 1 2 4
SCALE IN FEET

NOTES:

1. SPILL TRAYS DESIGNED TO CONTAIN ENTIRE VOLUME OF 1 MERCURY PIG AT FULL CAPACITY (WHEN 8 PIGS ARE BEING STORED ON THE TRAY).
2. THE STORAGE RACK SHOWN ON THIS DRAWING CAN HAVE MORE THAN 2 BAYS.
3. ANCHOR BOLT HOLES IN CONCRETE ARE SEALED WITH HARD WASHERS AND EPOXY TOUCH-UP PAINT.

NOT FOR CONSTRUCTION

FOR PROGRESS

DRAWING NO.	DRAWING TITLE

REFERENCE DRAWINGS

NO.	DESCRIPTION	BY	CHK'D	APP'D	DATE

REVISIONS

REV.	ISSUE FOR	AUTH.	BY	DATE
B	FOR INFORMATION	E.C.	S.S.	2012-12-14
A	FOR INFORMATION	K.A.	S.S.	2012-10-11

ISSUE AUTHORIZATION

HATCH™

DESIGNED BY B. MUHAMMED DATE 2012-10-11	DRAWN BY K. AWAN DATE 2012-10-11
CHECKED BY J. CHALMERS DATE 2012-10-11	DISCIP. ENGR. H. MIN DATE 2012-10-11
PROJ. DES. COORD. J. CHALMERS DATE 2012-10-11	PROJ. ENGR. S. SENNIK DATE 2012-10-11
PROJ. MGR. M. SUCHARDA DATE 2012-10-11	

PRECIOUS METALS RECOVERY LLC

PRECIOUS METALS RECOVERY LLC
DRY HILLS FACILITY PROJECT

ELEMENTAL MERCURY
STORAGE RACK SKETCH

SCALE	DWG. NO.	REV.
1/2"=1'-0" OR AS NOTED	H340940-0000-50-015-0009	B

DWG. NO. H340940-0000-50-042-0001

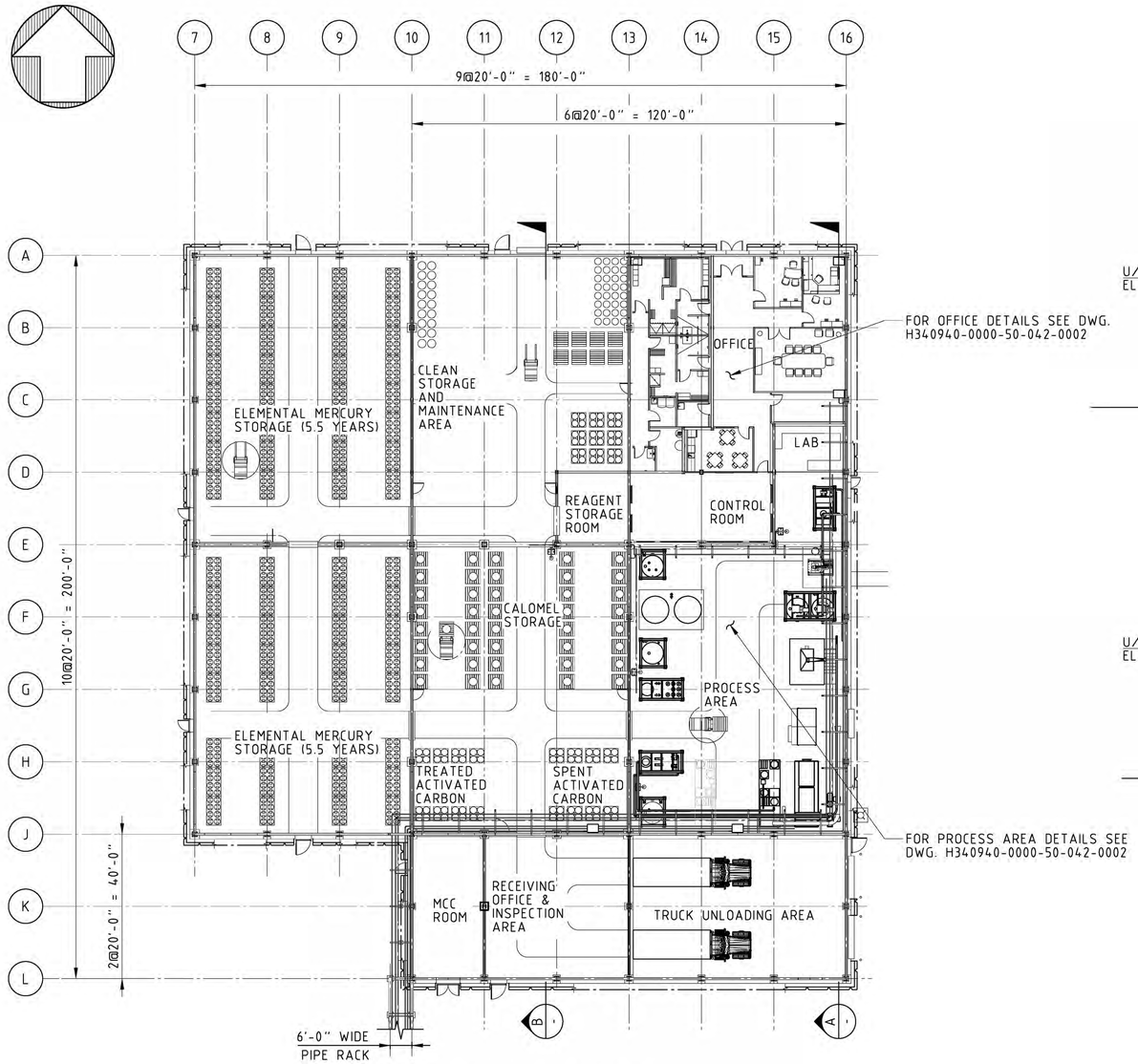

PLAN @ FIN FLR
EL. 4989'-6"

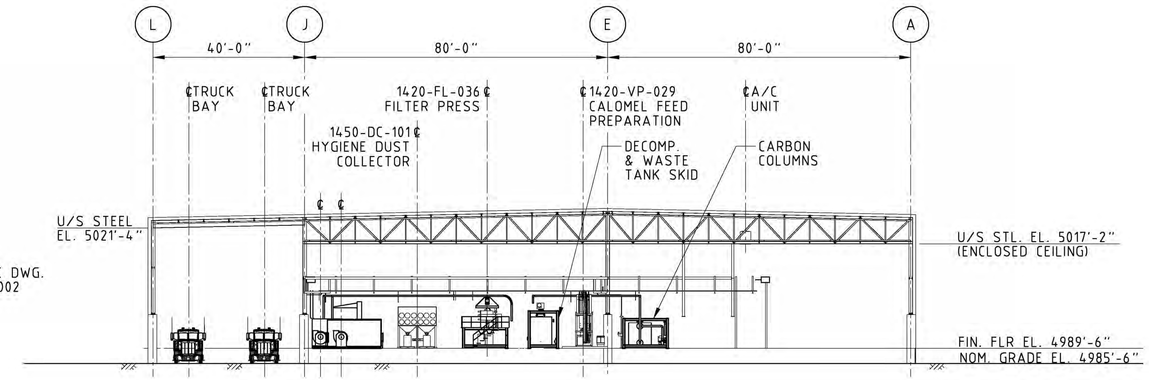

SECTION A-A

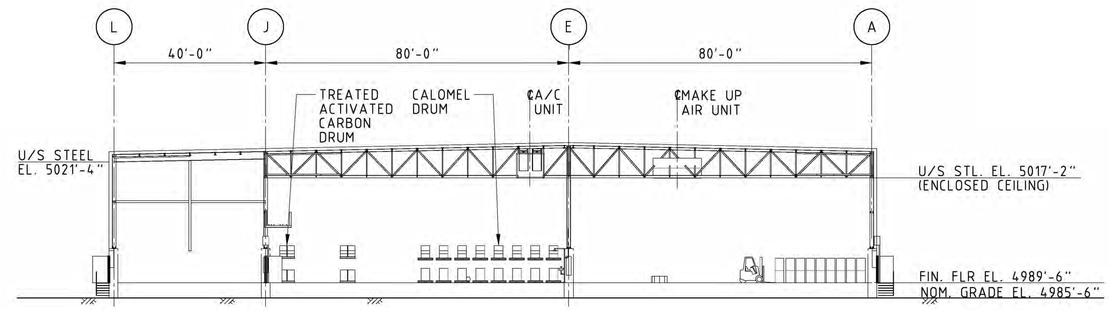

SECTION B-B

FOR INFORMATION
NOT FOR CONSTRUCTION

0 10 20 40
SCALE IN FEET

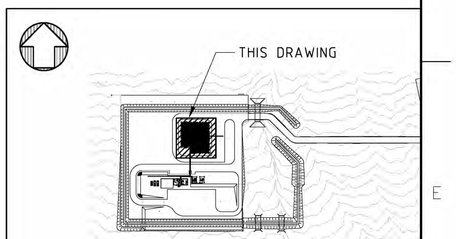

KEY PLAN
SCALE 1"-500'

DRAWING NO.	DRAWING TITLE
H340940-0000-50-014-0002	PLOT PLAN
H340940-0000-50-014-0001	OVERALL SITE PLAN

REFERENCE DRAWINGS

NO.	DESCRIPTION	BY	CHK'D	APP'D	DATE

REVISIONS

REV.	ISSUE FOR	AUTH. BY		DATE
G	ISSUE FOR DESIGN	E.C.	S.S.	2012-12-14
F	ISSUE FOR DESIGN	E.C.	S.S.	2012-11-14
E	ISSUE FOR DESIGN	D.K.	S.S.	2012-10-18
D	ISSUE FOR DESIGN	J.C.	S.S.	2012-10-11
C	FS FINAL REPORT	J.C.	S.S.	2012-07-31
B	FS FINAL REPORT	J.C.	S.S.	2012-07-05
A	DISCIPLINE ENGINEERING	L.Z.	J.C.	2012-06-01

ISSUE AUTHORIZATION

HATCH™

DESIGNED BY J. CHALMERS DATE 2012-06-01	DRAWN BY K. AWAN DATE 2012-06-01
CHECKED BY J. CHALMERS DATE 2012-06-01	DISCIP. ENGR. D. KLUWAK DATE 2012-06-01
PROJ. DES. COORD. J. CHALMERS DATE 2012-06-01	PROJ. ENGR. S. SENNIK DATE 2012-06-01
PROJ. MGR. M. SUCHARDA DATE 2012-06-01	

PRECIOUS METALS RECOVERY LLC

PRECIOUS METALS RECOVERY LLC
DRY HILLS FACILITY PROJECT

DRY HILLS FACILITY
PROCESS/STORAGE BUILDING
GENERAL ARRANGEMENT

SCALE 1" = 20' OR AS NOTED

DWG. NO. H340940-0000-50-042-0001

REV. G

DWG. NO. H340940-0000-50-042-0002

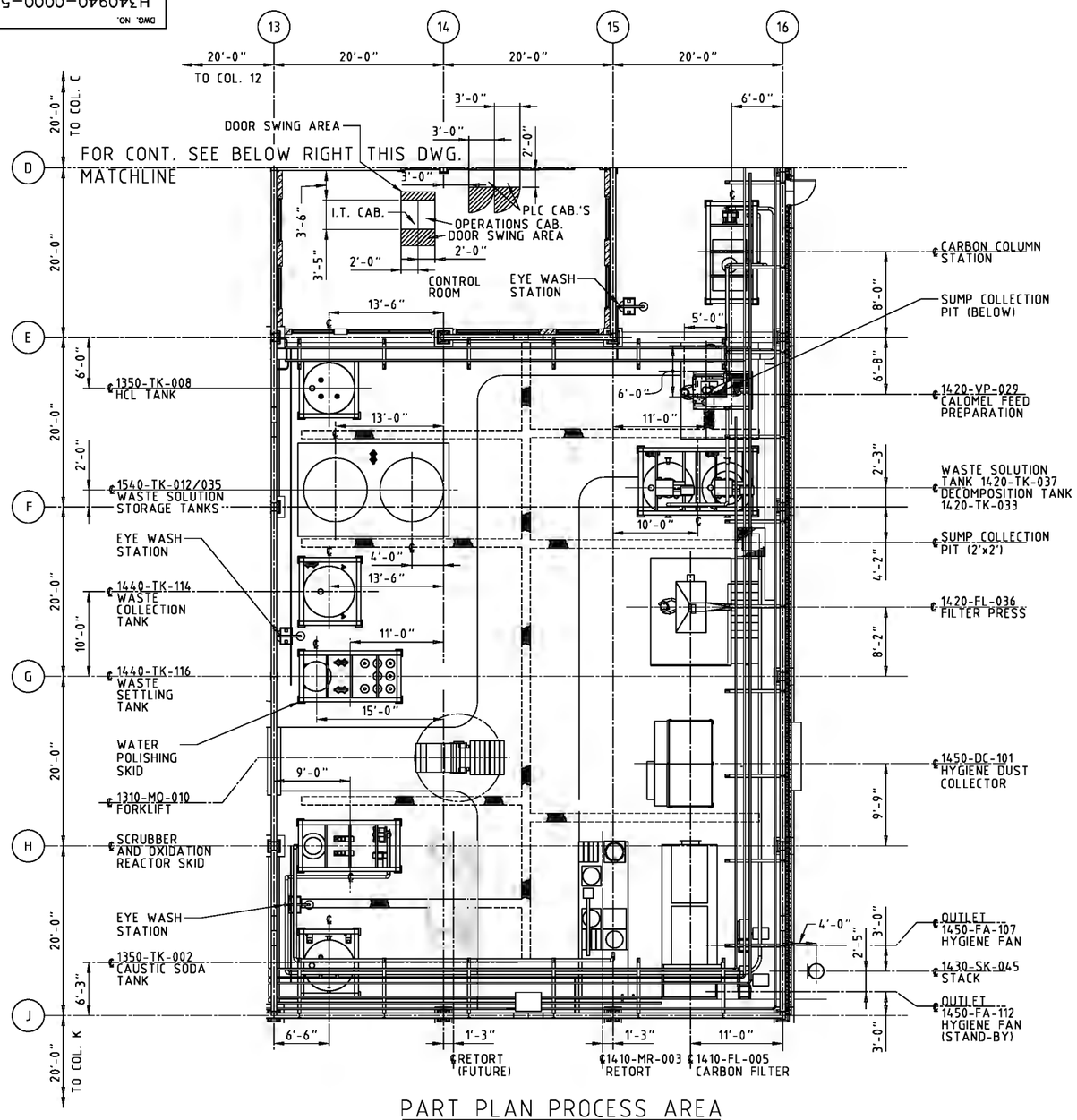

PART PLAN PROCESS AREA
@ FIN. FLR EL. 4989'-6"

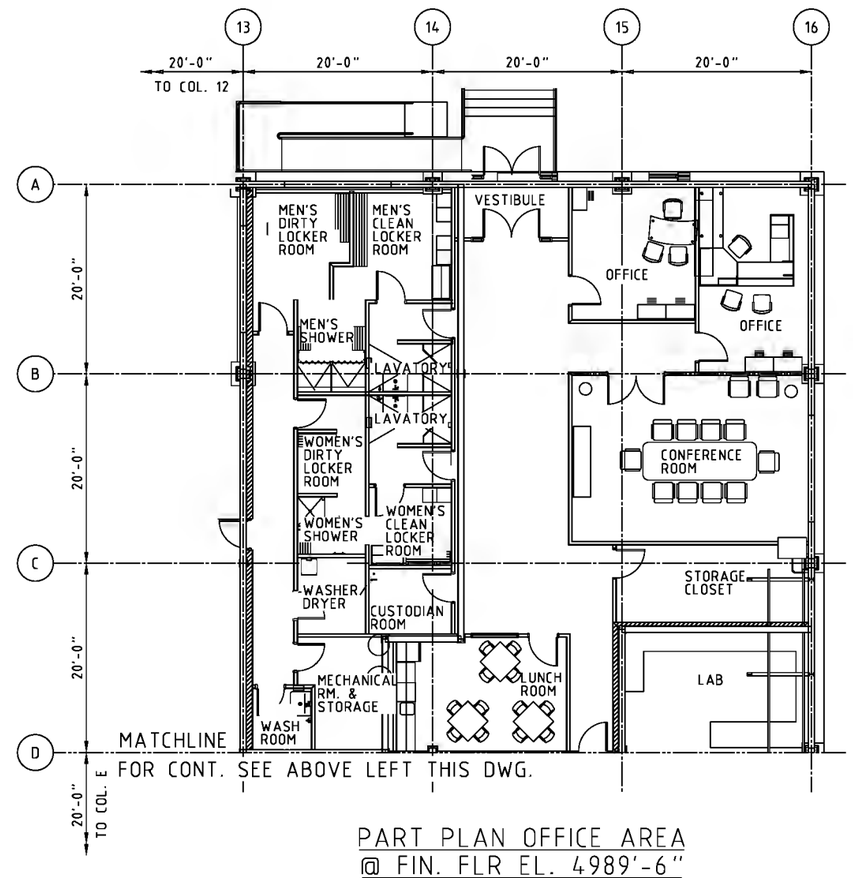

PART PLAN OFFICE AREA
@ FIN. FLR EL. 4989'-6"

FOR PROGRESS
NOT FOR CONSTRUCTION

SCALE IN FEET

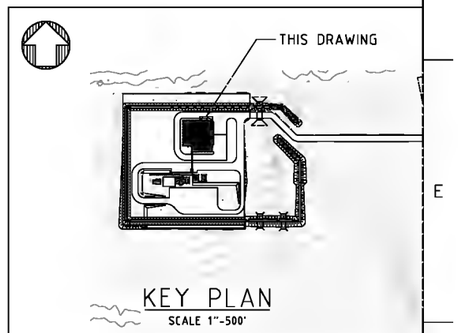

KEY PLAN
SCALE 1"=500'

DRAWING NO.	DRAWING TITLE
H340940-0000-050-042-0001	PROCESS\STORAGE BLDG. GENERAL ARRANGEMENT

REFERENCE DRAWINGS

NO.	DESCRIPTION	BY	CHK'D	APP'D	DATE

REVISIONS

REV.	ISSUE FOR	AUTH. BY		DATE
H	ISSUE FOR DESIGN	J.C.	S.S.	2013-07-17
G	ISSUE FOR DESIGN	E.C.	S.S.	2012-12-14
F	ISSUE FOR DESIGN	E.C.	S.S.	2012-11-14
E	ISSUE FOR DESIGN	D.K.	S.S.	2012-10-18
D	ISSUE FOR DESIGN	J.C.	S.S.	2012-10-11
C	FS FINAL REPORT	J.C.	S.S.	2012-07-31
B	FS FINAL REPORT	J.C.	S.S.	2012-07-05
A	DISCIPLINE ENGINEERING	J.C.	S.S.	2012-06-18

ISSUE AUTHORIZATION

HATCH™

DESIGNED BY J. CHALMERS DATE 2012-06-18	DRAWN BY D. EAILEY DATE 2012-06-18
CHECKED BY J. CHALMERS DATE 2012-06-18	DISCIP. ENGR. D. KLUWAK DATE 2012-06-18
PROJ. DES. COORD. J. CHALMERS DATE 2012-06-18	PROJ. ENGR. S. SENNIK DATE 2012-06-18
PROJ. MGR. M. SUCHARDA DATE 2012-06-18	

PRECIOUS METALS RECOVERY LLC

PRECIOUS METALS RECOVERY LLC
DRY HILLS FACILITY PROJECT

DRY HILLS FACILITY
PROCESS/STORAGE BUILDING
OFFICE & PROCESS AREA

SCALE 1/8" = 1' OR AS NOTED

DWG. NO. H340940-0000-50-042-0002

REV. H

DWG. NO. H340940-0000-50-042-0003

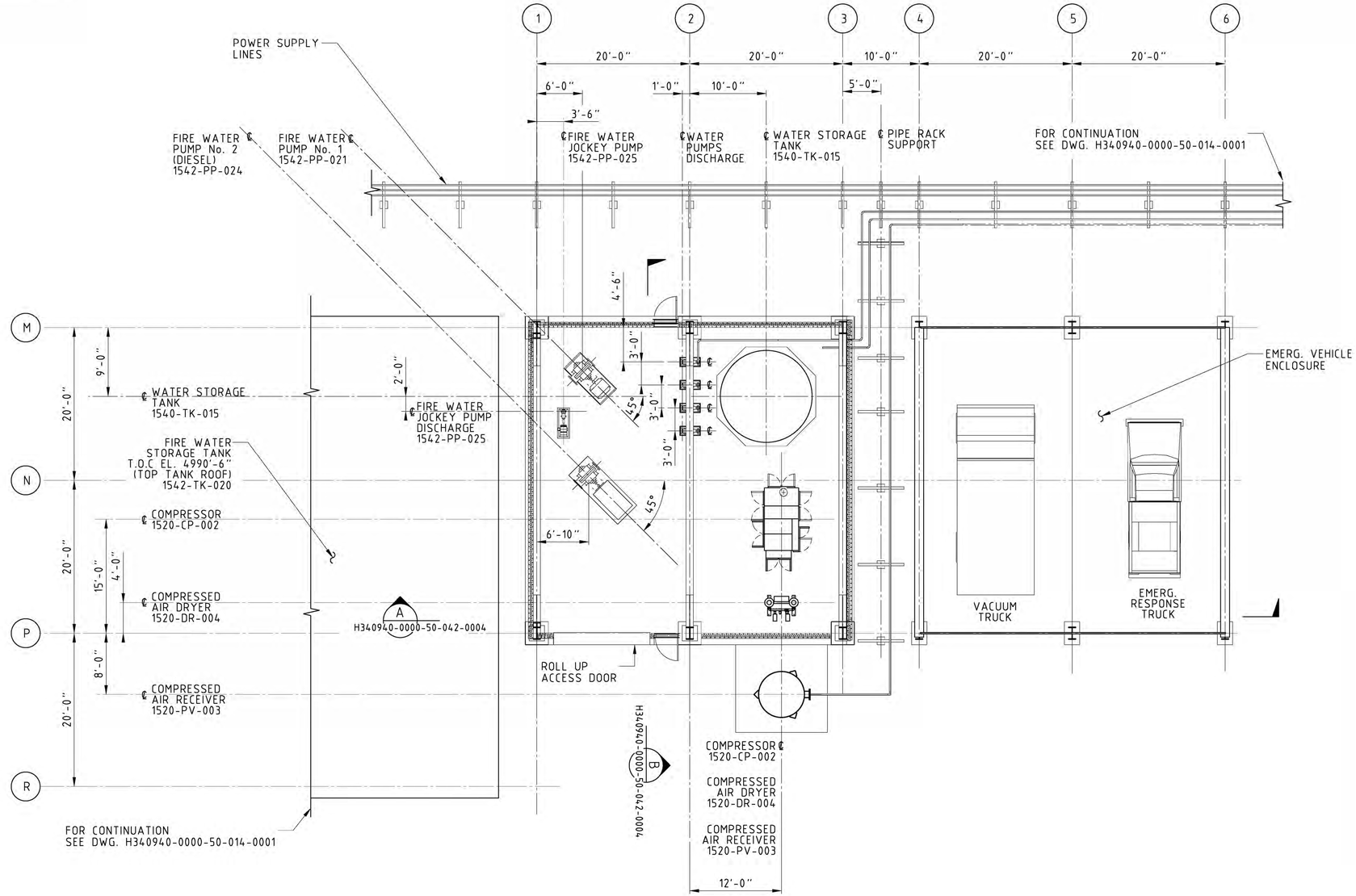

PLAN @ FIN. FLR
EL. 4985'-6"

SCALE IN FEET 0 4 8 16

NOTES:

1. FOR GENERAL NOTES SEE DWG. H340940-0000-50-014-0001.

FOR INFORMATION
NOT FOR CONSTRUCTION

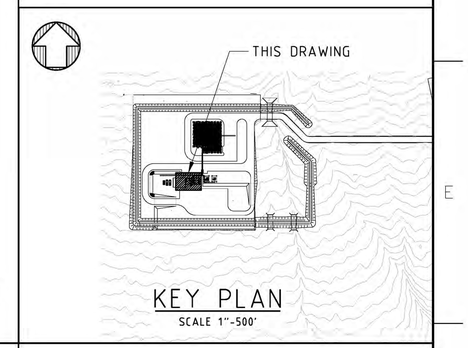

KEY PLAN
SCALE 1"=500'

DRAWING NO.	DRAWING TITLE
H340940-0000-50-042-0004	UTILITY BUILDING GENERAL ARRANGEMENT
H340940-0000-50-014-0003	AREA PLOT PLAN
H340940-0000-50-014-0002	PROCESS AREA PLOT PLAN
H340940-0000-50-014-0001	OVERALL SITE PLAN

REFERENCE DRAWINGS

NO.	DESCRIPTION	BY	CHK'D	APP'D	DATE

REVISIONS

REV.	ISSUE FOR	AUTH. BY		DATE
F	ISSUE FOR DESIGN	E.C.	S.S.	2012-12-14
E	ISSUE FOR DESIGN	E.C.	S.S.	2012-11-14
D	ISSUE FOR DESIGN	J.C.	S.S.	2012-10-11
C	FS FINAL REPORT	J.C.	S.S.	2012-07-30
B	FS FINAL REPORT	J.C.	S.S.	2012-07-05
A	DISCIPLINE ENGINEERING	J.C.	S.S.	2012-06-18

ISSUE AUTHORIZATION

HATCH™

DESIGNED BY J. CHALMERS DATE 2012-06-18	DRAWN BY K. AWAN DATE 2012-06-18
CHECKED BY J. CHALMERS DATE 2012-06-18	DISCIP. ENGR. D. KLUWAK DATE 2012-06-18
PROJ. DES. COORD. J. CHALMERS DATE 2012-06-18	PROJ. ENGR. S. SENNIK DATE 2012-06-18
PROJ. MGR. M. SUCHARDA DATE 2012-06-18	

PRECIOUS METALS RECOVERY LLC

PRECIOUS METALS RECOVERY LLC
DRY HILLS FACILITY PROJECT

DRY HILLS FACILITY
UTILITY BUILDING
GENERAL ARRANGEMENT

SCALE 1/8"=1'-0" OR AS NOTED

DWG. NO. H340940-0000-50-042-0003

REV. F

DWG. NO. H340940-0000-50-042-0004

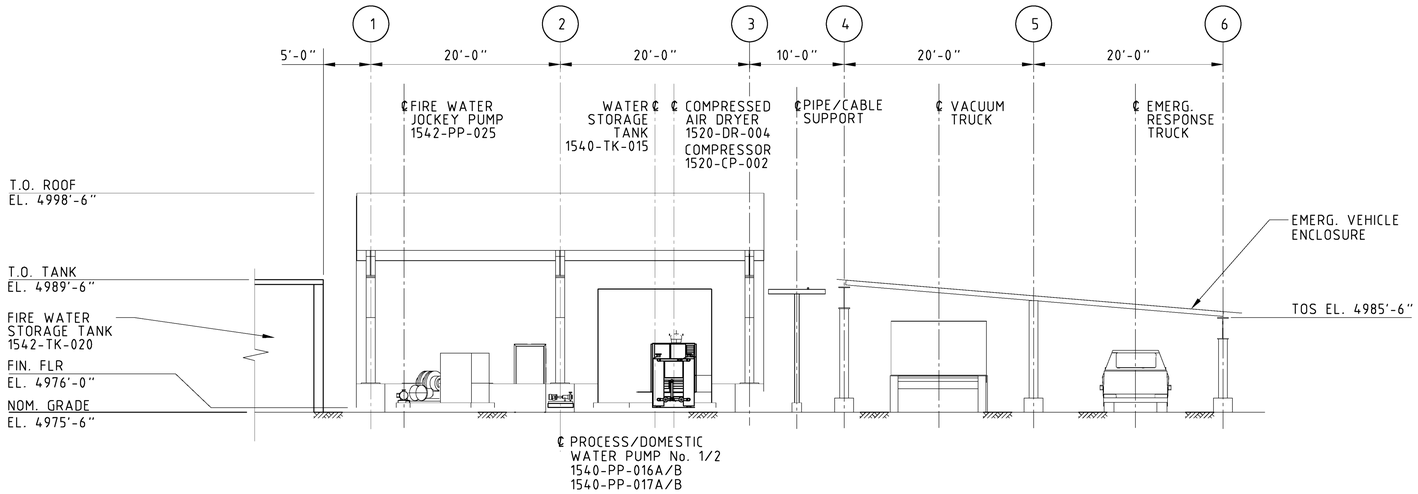

SECTION A-A

REFER DWG. H340940-0000-50-042-0003

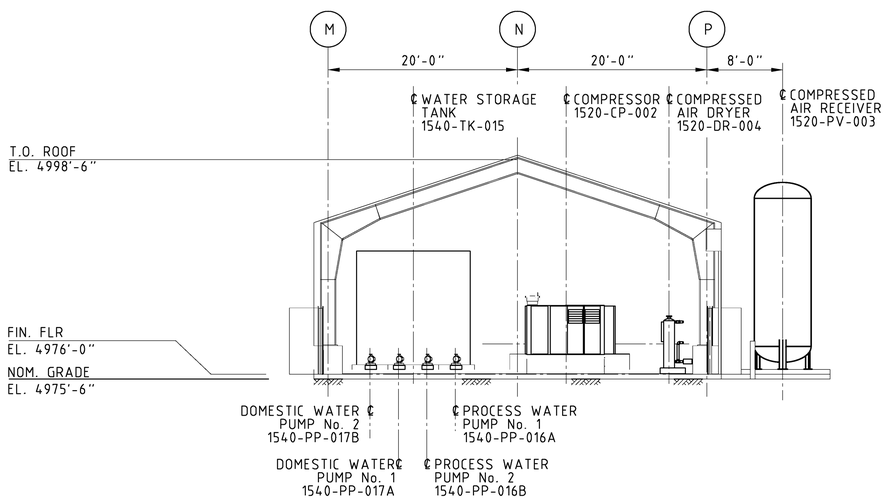

SECTION B-B

REFER DWG. H340940-0000-50-042-0003

NOTES:

1. FOR GENERAL NOTES SEE DWG. H340940-0000-50-014-0001.

FOR INFORMATION
NOT FOR CONSTRUCTION

0 4 8 16
SCALE IN FEET

DRAWING NO.	DRAWING TITLE
H340940-0000-50-042-0003	UTILITY BUILDING GENERAL ARRANGEMENT

REFERENCE DRAWINGS

NO.	DESCRIPTION	BY	CHK'D	APP'D	DATE

REVISIONS

REV.	ISSUE FOR	AUTH. BY		DATE
E	ISSUE FOR DESIGN	E.C.	S.S.	2012-12-14
D	ISSUE FOR DESIGN	J.C.	S.S.	2012-10-11
C	FS FINAL REPORT	J.C.	S.S.	2012-07-30
B	FS FINAL REPORT	J.C.	S.S.	2012-07-05
A	DISCIPLINE ENGINEERING	J.C.	S.S.	2012-06-18

ISSUE AUTHORIZATION

HATCH™

DESIGNED BY J. CHALMERS DATE 2012-06-18	DRAWN BY K. AWAN DATE 2012-06-18
CHECKED BY J. CHALMERS DATE 2012-06-18	DISCIP. ENGR. D. KLUWAK DATE 2012-06-18
PROJ. DES. COORD. J. CHALMERS DATE 2012-06-18	PROJ. ENGR. S. SENNIK DATE 2012-06-18
PROJ. MGR. M. SUCHARDA DATE 2012-06-18	

PRECIOUS METALS RECOVERY LLC

PRECIOUS METALS RECOVERY LLC
DRY HILLS FACILITY PROJECT

DRY HILLS FACILITY
UTILITY BUILDING
GENERAL ARRANGEMENT

SCALE	DWG. NO.	REV.
1/8"=1'-0" OR AS NOTED	H340940-0000-50-042-0004	E

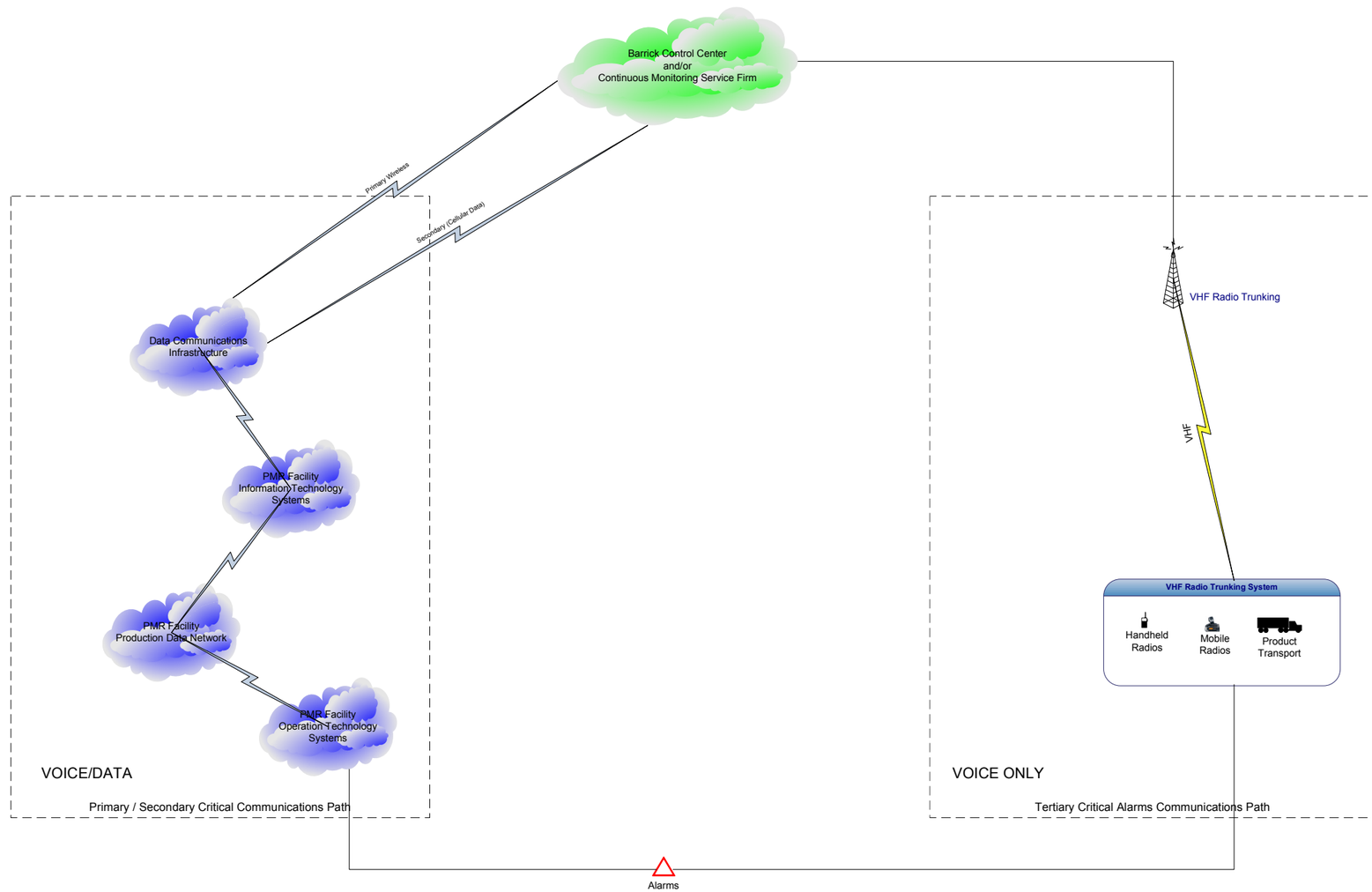

DRAWING NO.	DRAWING TITLE

REFERENCE DRAWINGS

NO.	DESCRIPTION	BY	CHK'D	APP'D	DATE
C	For Information	H.S	T.D	K.vN	2012-12-14
B	Client review	H.S	T.D	K.vN	2012-08-15
A	Internal Review	H.S	T.D	K.vN	2012-07-31

REVISIONS

REV.	ISSUE FOR	AUTH. BY	DATE
C	For Information		
B	Client review		
A	Discipline review		

ISSUE AUTHORIZATION

HATCH™

DESIGNED BY H. Salermo DATE
DRAWN BY H. Salermo DATE
CHECKED BY T. Doyle DATE
DEC'P. ENGR. K. van Nes DATE
PROJ. DES. COORD. DATE
PROJ. ENGR. S. Sennik DATE
PROJ. MGR. M. Sucharda DATE

PRECIOUS METALS RECOVERY LLC

PRECIOUS METALS RECOVERY LLC
DRY HILLS FACILITY PROJECT

CRITICAL ALARMS
COMMUNICATIONS MECHANISMS

SCALE OR AS NOTED

DWG. NO. H340940-0000-75-004-0002

REV. C

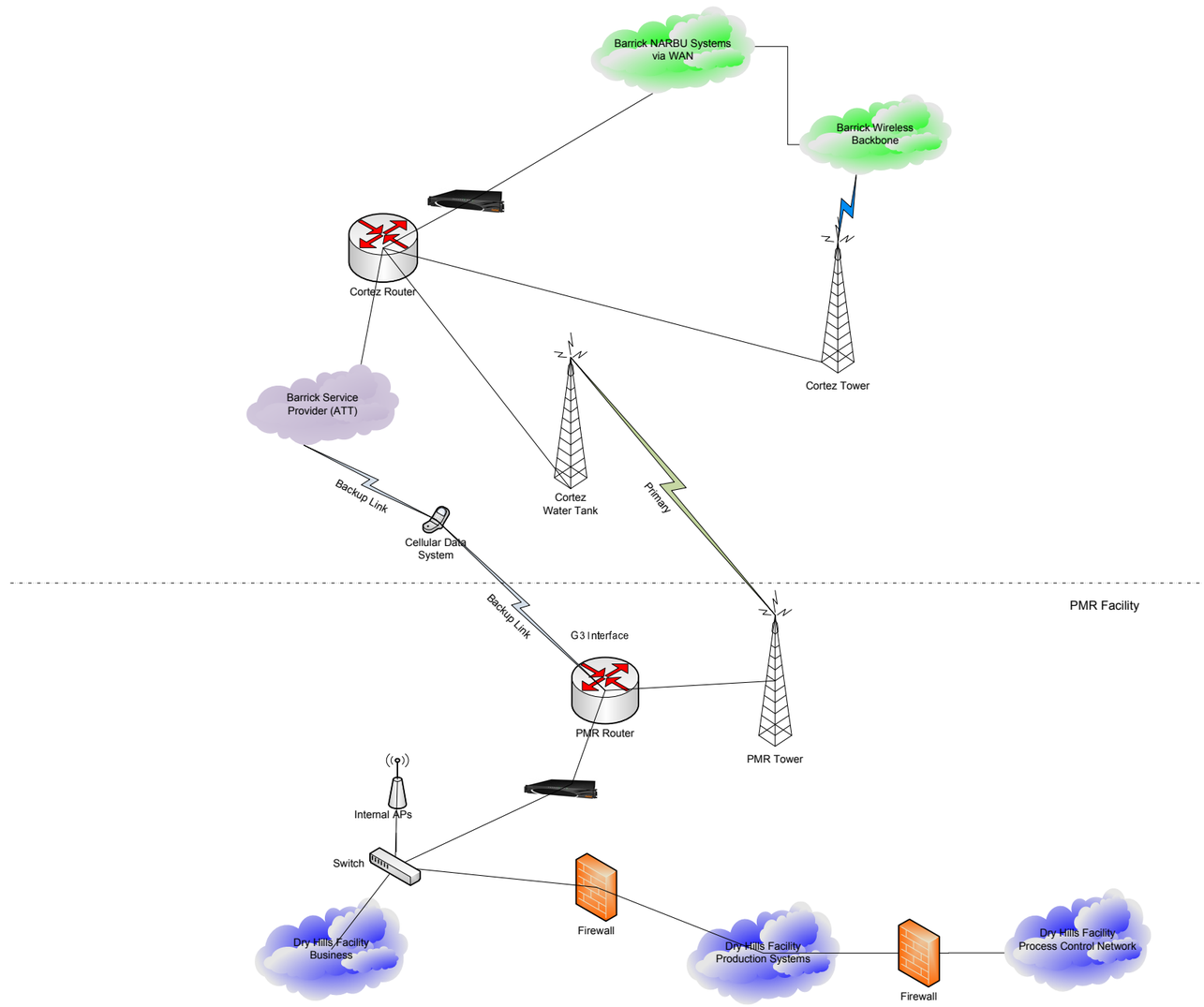

DRAWING NO.	DRAWING TITLE
REFERENCE DRAWINGS	

NO.	DESCRIPTION	BY	CHK'D	APP'D	DATE
C	For Information	H.S	T.D	K.vN	2012-12-14
B	Client review	H.S	T.D	K.vN	2012-08-15
A	Internal Review	H.S	T.D	K.vN	2012-07-31

REVISIONS

REV.	ISSUE FOR	AUTH. BY	DATE
C	For Information		
B	Client review		
A	Discipline review		

ISSUE AUTHORIZATION

HATCH™

DESIGNED BY H. Salermo DATE	DRAWN BY H. Salermo DATE
CHECKED BY T. Doyle DATE	DEC'P. ENGR. K. van Nes DATE
PROJ. DES. COORD. DATE	PROJ. ENGR. S. Sennik DATE
PROJ. MGR. M. Sucharda DATE	

PRECIOUS METALS RECOVERY LLC

PRECIOUS METALS RECOVERY LLC
DRY HILLS FACILITY PROJECT

COMMUNICATIONS CONCEPTUAL LOGICAL ARCHITECTURE

SCALE: OR AS NOTED

DWG. NO. H340940-0000-75-004-0005

REV. C

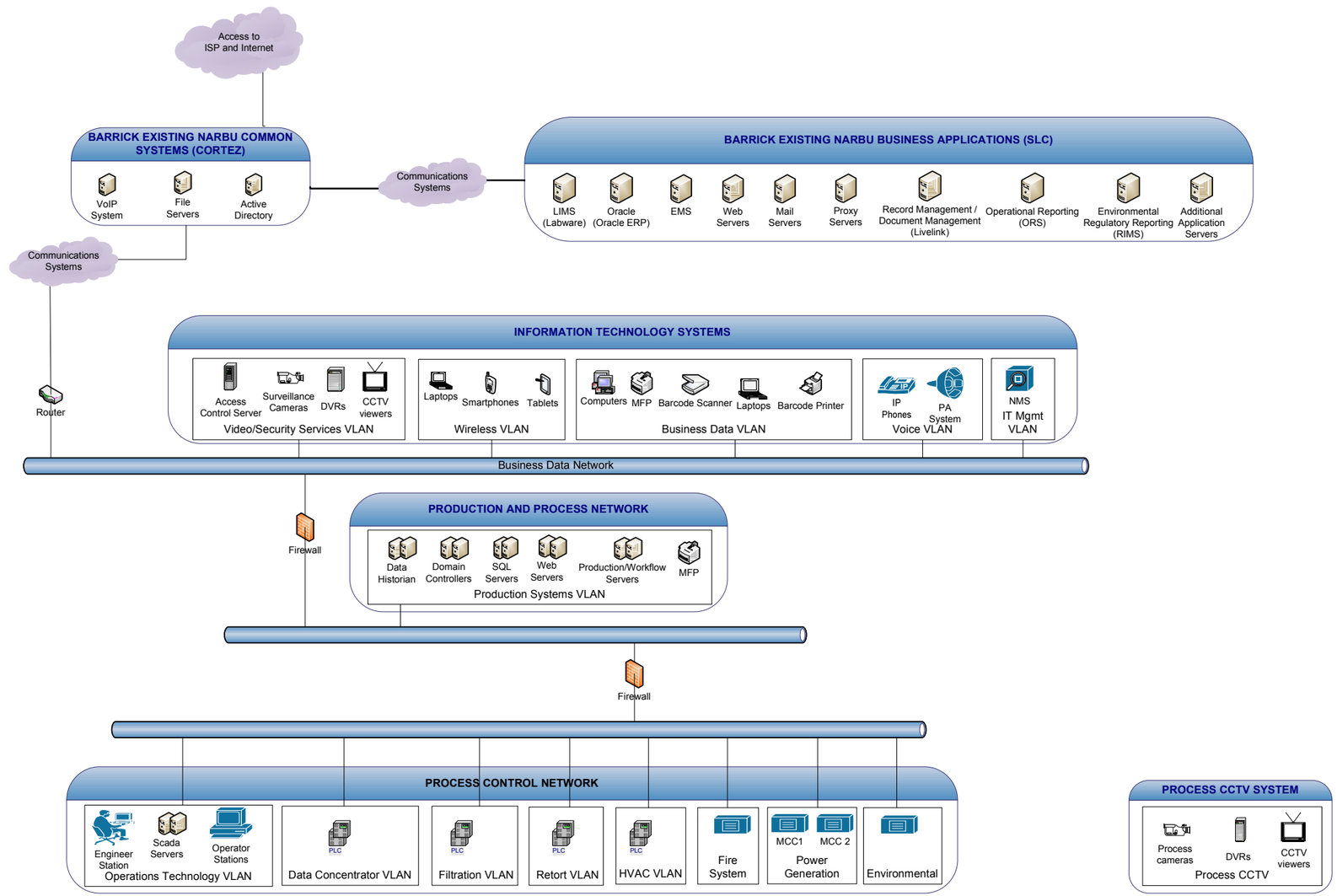

DRAWING NO.	DRAWING TITLE
REFERENCE DRAWINGS	

NO.	DESCRIPTION	BY	CHKD	APPD	DATE
D	For Information	H.S	T.D	K.vN	2012-12-14
C	Client Approval	H.S	T.D	K.vN	2012-09-12
B	Client review	H.S	T.D	K.vN	2012-08-15
A	Internal Review	H.S	T.D	K.vN	2012-07-31

REVISIONS

REV.	ISSUE FOR	AUTH. BY	DATE
D	For Information		
C	Client Approval		
B	Client review		
A	Discipline review		

ISSUE AUTHORIZATION

HATCH™

DESIGNED BY H. Salermo DATE
DRAWN BY H. Salermo DATE
CHECKED BY T. Doyle DATE
DEC/P. ENGR. K. van Nes DATE
PROJ. DES. COORD. DATE
PROJ. ENGR. S. Sennik DATE
PROJ. MGR. M. Sucharda DATE

PRECIOUS METALS RECOVERY LLC

PRECIOUS METALS RECOVERY LLC
DRY HILLS FACILITY PROJECT

SYSTEMS NETWORK ARCHITECTURE

SCALE OR AS NOTED

DWG. NO. H340940-0000-75-004-0009

REV. D

APPENDIX 1-B

Process and Instrumentation Diagrams (P&IDs)

DWG. NO. H340940-0000-75-031-0001

INSTRUMENT LINES

- INSTRUMENT SUPPLY OR CONNECTION TO PROCESS
- ELECTRICAL SIGNAL (OR)
- INTERNAL SYSTEM LINK (SOFTWARE OR DATA LINK)
- HYDRAULIC SIGNAL
- CAPILLARY TUBING
- PNEUMATIC SIGNAL
- UNDEFINED INSTRUMENT LINE
- GUIDED ELECTROMAGNETIC LINE
- ELECTROMAGNETIC OR SONIC SIGNAL (NOT GUIDED)
- MECHANICAL INSTRUMENT LINE

OPTIONAL BINARY (ON-OFF) SYMBOLS

- PNEUMATIC BINARY SIGNAL
- ELECTRIC BINARY SIGNAL (OR)

MATERIAL DESIGNATION
FROM/TO EQUIPMENT DESIGNATION
75-041-0001-001 | X > LINE CONNECTOR

NOTE:
1-) EXAMPLE: BRINE TO CENTRIFUGE XXX

GENERAL INSTRUMENT SYMBOLS

- PILOT LIGHT (WARNING BEACON)
- PURGE OR FLUSHING DEVICE
- RESET FOR LATCH - TYPE ACTUATOR
- UNDEFINED INTERLOCK LOGIC HARDWARE
- UNDEFINED INTERLOCK LOGIC SOFTWARE
- FILTER / REGULATOR WITH PRESSURE GAUGE
- PIT 524-01 — INSTRUMENT WITH LONG TAG NUMBER
- RUPTURE DISK
- DIAPHRAGM SEAL
- INSTRUMENT SHARING COMMON HOUSING

MISCELLANEOUS

- CCTV CAMERA
- HORN OR LOUD SPEAKER
- AIR MOTOR
- ELECTRIC MOTOR
- RADIATION SOURCE
- A1 HH / TK101 H / L / LL — FUNCTIONAL LETTERS OUTSIDE OF SQUARE DENOTE HIGH AND LOW ALARMS PLUS RECORDING
- *V — INSTRUMENT SUPPLIED BY EQUIPMENT VENDOR, IN ADDITION TO FUNCTION SHOWN INSIDE CIRCLE IN THIS CASE

ACTUATOR SYMBOLS

- DIAPHRAGM
- HANDWHEEL USED - WITH ANY ACTUATOR
- DIAPHRAGM WITH POSITIONER
- PRESSURE BALANCED DIAPHRAGM
- CYLINDER ACTUATOR WITH POSITIONER
- CYLINDER ACTUATOR
- MANUAL OPERATOR
- D — DIGITAL
- S — SOLENOID
- S — SOLENOID WITH MANUAL RESET
- M — ROTARY MOTOR (ELECTRIC, HYDRAULIC, PNEUMATIC SIGNAL)
- E/H — ELECTRIC / HYDRAULIC
- PRESSURE RELIEF OR SPRING RETURN
- P — PILOT
- DUAL SOLENOID SWITCHING 4 WAY HYDRAULIC VALVE
- LEVEL REGULATOR MECHANICAL LINKAGE

PRESSURE REGULATORS

- PCV — SELF-CONTAINED BACK PRESSURE REGULATOR
- PCV — BACK PRESSURE WITH EXTERNAL TAP
- PCV — SELF-CONTAINED PRESSURE REDUCING
- PCV — PRESSURE REDUCING WITH EXTERNAL TAP
- PDCV — DIFFERENTIAL PRESSURE REDUCING WITH INTERNAL AND EXTERNAL PRESSURE TAPS
- PCV, PI — PRESSURE-REDUCING REGULATOR WITH INTEGRAL OUTLET PRESSURE RELIEF VALVE AND OPTIONAL PRESSURE INDICATOR

PRESSURE RELIEF VALVES

- PSV — PRESSURE RELIEF OR SAFETY VALVE
- PSV — VACUUM RELIEF VALVE

FUNCTION BLOCKS

- CONVERT
- CURRENT TO PNEUMATIC CONVERTER (EXAMPLE)

A - ANALOG
B - BINARY
D - DIGITAL
E - VOLTAGE
H - HYDRAULIC
I - CURRENT
O - ELECTROMAGNETIC, SONIC
P - PNEUMATIC
R - RESISTANCE (ELECTRICAL)

DISCRETE INSTRUMENTS

- PRIMARY LOCATION NORMALLY ACCESSIBLE TO OPERATOR
- PRIMARY LOCATION NORMALLY INACCESSIBLE TO OPERATOR
- FIELD MOUNTED
- AUXILIARY LOCATION NORMALLY ACCESSIBLE TO OPERATOR

SHARED DISPLAY - SHARED CONTROL

- PRIMARY LOCATION NORMALLY ACCESSIBLE TO OPERATOR
- PRIMARY LOCATION NORMALLY INACCESSIBLE TO OPERATOR
- FIELD MOUNTED
- AUXILIARY LOCATION NORMALLY ACCESSIBLE TO OPERATOR

COMPUTER FUNCTION

- PRIMARY LOCATION NORMALLY ACCESSIBLE TO OPERATOR
- PRIMARY LOCATION NORMALLY INACCESSIBLE TO OPERATOR
- FIELD MOUNTED
- AUXILIARY LOCATION NORMALLY ACCESSIBLE TO OPERATOR

PROGRAMMABLE LOGIC CONTROL

- PRIMARY LOCATION NORMALLY ACCESSIBLE TO OPERATOR
- PRIMARY LOCATION NORMALLY INACCESSIBLE TO OPERATOR
- FIELD MOUNTED
- AUXILIARY LOCATION NORMALLY ACCESSIBLE TO OPERATOR

INSTRUMENT VALVES

- IA, S, A, ATM — SOLENOID ACTUATED 3-WAY INSTRUMENT VALVE
- A1, S, IA, A, B, ATM — SOLENOID ACTUATED 4-WAY INSTRUMENT VALVE
- IA, TY — VALVE ACTUATOR WITH ATTACHED ELECTRO-PNEUMATIC CONVERTER (EXAMPLE)
- DUAL SOLENOIDS SWITCHING 4-WAY HYDRAULIC VALVE

INSTRUMENTS ABBREVIATIONS

AG	ABOVE GROUND
ATM	ATMOSPHERE
BL	BATTERY LIMIT
BTL	BOTTOM TANGENT LINE
BYP	BYPASS
CC	CHEMICAL CLEANOUT
CL	CENTERLINE
CO	CLEANOUT
CONN	CONNECTION
CS	CARBON STEEL
CTR	CENTER
CV	CONTROL VARIABLE
PCS	PLANT CONTROL SYSTEM
DES	DESIGN
DIA	DIAMETER
DP	DESIGN PRESSURE
DRN	DRAIN
DT	DESIGN TEMPERATURE
DWG	DRAWING
(E)	EXISTING
EL	ELEVATION
ESD	EMERGENCY SHUTDOWN
ERR	ERROR
FOF	FACE OF FLANGE
(F)	FURNISHED
FLG	FLANGE
FP	FULL PORT
FV	FULL VACCUM
GO	GEAR OPERATED
GR	GRADE
HS	HOSE CONNECTION
HDR	HEADER
HH	HAND HOLE
HMI	HUMAN MACHINE INTERFACE
MOA	MANUAL/OFF/AUTOMATIC
HP	HIGH PRESSURE
HPT	HIGH POINT
ISBL	INSIDE BATTERY LIMITS
LC	LOCKED CLOSED
IP	INPUT
LO	LOCKED OPEN
LP	LOW PRESSURE
MAX	MAXIMUM
MIN	MINIMUM
MOV	MOTOR OPERATED VALVE
MTL	MATERIAL
NC	NORMALLY CLOSED
NNF	NORMALLY NO FLOW
NOZ	NOZZLE
NO	NORMALLY OPEN
O/C	OPEN/CLOSE
I/O	INPUT/OUTPUT
OP	OUTPUT
OSBL	OUTSIDE BATTERY LIMITS
OVHD	OVERHEAD
PID	CONTROLLER (PROPORTIONAL/INTEGRAL/DERIVATIVE)
PLC	PROGRAMMABLE LOGIC CONTROLLER
PRESS	PRESSURE
PV	PROCESS VARIABLE
(R)	RELOCATED
REQ	REQUIRED
RTD	RESISTANCE TEMPERATURE DETECTOR
SC	SAMPLE CONNECTION
SCH	SCHEDULE
SD	SHUTDOWN
SG	SPECIFIC GRAVITY
SIS	SAFETY INSTRUMENTED SYSTEM
SO	STEAM OUT
SP	SETPOINT
SS	STAINLESS STEEL
ST/SP	START/STOP
T/C	THERMOCOUPLE
TDH	TOTAL DIFFERENTIAL HEAD
TEMP	TEMPERATURE
THRD	THREADED
TL	TANGENT LINE
TSO	TIGHT SHUT-OFF
T/T	TANGENT TO TANGENT
TYP	TYPICAL
UG	UNDERGROUND
VNT	VENT
VAC	VACCUM
VB	VORTEX BREAKER
W/	WITH
W/O	WITHOUT

ABBREVIATIONS - POWER SUPPLY

AS	AIR SUPPLY
IA	INSTRUMENT AIR
PA	PLANT AIR
ES	ELECTRIC SUPPLY
GS	GAS SUPPLY
HS	HYDRAULIC SUPPLY
WS	WATER SUPPLY

ABBREVIATIONS - FAILURE MODE

FO	FAIL OPEN
FC	FAIL CLOSE
FL	FAIL LAST
FI	FAIL INTERMEDIATE

ISA - INSTRUMENT IDENTIFICATION LETTERS

	FIRST LETTER		SUCCEEDING LETTERS		
	MEASURED OR INITIATING VARIABLE	MODIFIER	READOUT OR PASSIVE FUNCTION	OUTPUT FUNCTION	MODIFIER
A	ANALYSIS		ALARM		
B	BURNER, COMBUSTION		USER'S CHOICE	USER'S CHOICE	USER'S CHOICE
C	USER'S CHOICE * (CONDUCTIVITY ELECTRICAL)			CONTROL	*CLOSE
D	USER'S CHOICE * (DENSITY /SPECIFIC GRAVITY)	DIFFERENTIAL			
E	VOLTAGE		SENSOR (PRIMARY ELEMENT)		
F	FLOW RATE	RATIO (FRACTION)			
G	USER'S CHOICE * (GAUGING / DIMENSIONAL)		GLASS, VIEWING DEVICE		
H	HAND (MANUALLY INITIATED)				HIGH
I	CURRENT (ELECTRICAL)		INDICATE		
J	POWER	SCAN			
K	TIME, TIME SCHEDULE	TIME RATE OF CHANGE		CONTROL STATION	
L	LEVEL		LIGHT		LOW
M	USER'S CHOICE *(MOISTURE)	MOMENTARY			MIDDLE, INTERMEDIATE
N	USER'S CHOICE * (TORQUE)		USER'S CHOICE	USER'S CHOICE	USER'S CHOICE
O	USER'S CHOICE		ORIFICE, RESTRICTION		*OPEN
P	PRESSURE, VACUUM		POINT (TEST) CONNECTION		
Q	QUANTITY	INTEGRATE, TOTALIZE			
R	RADIATION		RECORD		
S	SPEED, FREQUENCY	SAFETY		SWITCH	
T	TEMPERATURE			TRANSMIT	
U	**MULTI-VARIABLE		**MULTI-FUNCTION	**MULTI-FUNCTION	**MULTI-FUNCTION
V	VIBRATION, MECHANICAL ANALYSIS			VALVE, DAMPER, LOUVER	
W	WEIGHT, FORCE		WELL		
X	UNCLASSIFIED	X AXIS	UNCLASSIFIED *(TRANSDUCER)	UNCLASSIFIED	UNCLASSIFIED
Y	EVENT, STATE OR PRESENCE			RELAY, COMPUTE CONVERT	
Z	POSITION, DIMENSION	Z AXIS		DRIVE,ACTUATE OR UNCLASSIFIED FINAL CONTROL ELEMENT	

ANSI/ISA-S5.1-1984 (R 1992) (R 2003)

LEGEND:
* = AS PROPOSED BY HATCH
** = WHEN USED EXPLANATION IS SHOWN ADJACENT TO INSTRUMENT SYMBOL.
UX = MOTOR CONTROL SIGNAL.

TYPICAL TAG NUMBER

XXXX 123A
- INSTRUMENT IDENTIFICATION OR TAG NUMBER
- OPTIONAL SUFFIX
- LOOP NUMBER
- TRAIN NUMBER (IF REQUIRED)

NOTE:
ALL INSTRUMENTS BELONG TO AREA NUMBER XXXX.

REFERENCE DRAWINGS

DRAWING NO.	DRAWING TITLE
H340940-0000-75-031-0003	LEGEND SHEET # 3
H340940-0000-75-031-0002	LEGEND SHEET # 2
H340940-0000-75-031-0001	LEGEND SHEET # 1

REVISIONS

NO.	DESCRIPTION	BY	CHK'D	APP'D	DATE

ISSUE AUTHORIZATION

REV.	ISSUE FOR	AUTH. BY		DATE
D	ISSUE FOR DESIGN	E.C.	S.S.	2012-12-14
C	ISSUE FOR DESIGN	R.A.	S.S.	2012-11-14
B	CLIENT REVIEW	R.A.	S.S.	2012-07-27
A	INTERNAL REVIEW	R.A.	S.S.	2012-06-12

HATCH™

DESIGNED BY M. NENE DATE 2012-06-12	DRAWN BY D. BARNATT DATE 2012-06-12
CHECKED BY M. NENE DATE 2012-06-12	DISCIP. ENGR. J. HEIDA/R. ALADI DATE 2012-06-12
PROJ. DES. COORD. J. CHALMERS DATE 2012-06-12	PROJ. ENGR. S. SENNIK DATE 2012-06-12
PROJ. MGR. M. SUCHARDA DATE 2012-06-12	

PRECIOUS METALS RECOVERY LLC

PRECIOUS METALS RECOVERY LLC
DRY HILLS FACILITY PROJECT

LEGEND SHEET # 1
PIPING AND INSTRUMENTATION DIAGRAM

SCALE NTS OR AS NOTED | DWG. NO. H340940-0000-75-031-0001 | REV. D

DWG. NO. H340940-0000-75-031-0002

GENERAL SYMBOLS

- SPEC CHANGE (188 / 189)
- TIE-IN POINT OR CONNECTION — TP 001 — TIE-IN POINT TYPE P= Piping (TP) I = Instrumentation (TI) — SEQUENTIAL NUMBER
- BATTERY LIMIT
- FLOW DIRECTION
- REMARKS TO / FROM — DRAWING SHEET CONNECTOR — XXX-J-340940-XXX

PROCESS LINE TYPES

- MAJOR PROCESS (Green-4)
- SECONDARY PROCESS (Blue-3)
- UTILITY LINE (Yellow-2)
- PROCESS INTERMITTENT (Process Flow Diagrams Only)
- VENDOR SUPPLY (Grey-1)
- VENDOR SUPPLY LIMIT
- MATERIAL FLOW LINE
- FUTURE LINES
- HC — INSULATION - HEAT CONSERVATION
- PP — INSULATION - PERSONAL PROTECTION
- SR — INSULATION - SOLAR RADIATION
- AS — INSULATION - ANTI SWEAT
- NA — INSULATION - NOISE ABATEMET
- ET — INSULATION - ELECTRICALLY TRACED
- ST — INSULATION - STEAM TRACED
- SLOPE — SLOPE

STRAINERS

- TEMPORARY / START UP
- Y STRAINER
- BASKET STRAINER
- DOUBLE BASKET STRAINER

LEVEL SYMBOLS

- LEVEL GAUGE
- CAPACITANCE LEVEL
- NUCLEAR LEVEL TRANSDUCER
- STILLING WELL
- MICROWAVE LEVEL XDR

PIPE FITTINGS

- CONCENTRIC REDUCER
- ECCENTRIC REDUCER
- REDUCING FLANGE
- VICTAULIC COUPLING
- UNION
- END CAP WELDED
- END CAP SCREWED
- PLUG
- BLIND FLANGE
- SPADE/PADDLE BLANK (Normally Closed)
- SPADE/PADDLE BLANK (Normally Open)
- SPECTACLE BLANK (Normally Open)
- SPECTACLE BLANK (Normally Closed)
- WATER JACKET
- VENT
- SAFE VENT
- TANK VENT

MISCELLANEOUS CONNECTIONS

- V — VENT POINT
- F — FLUSHING POINT
- S — SAMPLE POINT
- D — DRAIN POINT
- P — PURGE OR FLUSHING CONNECTION

FIRE & SAFETY

- FIRE HYDRANT
- HOSE REEL
- FC — FOAM GENERATOR
- HA — HOSE ASSEMBLY
- UW — SPECIALTY STATION HOSE
- FIRE MONITOR

PRIMARY ELEMENT SYMBOLS (FLOW)

- M — MAGNETIC FLOW METER
- FLOW ELEMENT DENSITY
- T — PITOT TUBE
- E — ANNUBAR FLOW METER
- FLOW NOZZLE
- V — VORTEX SHEDDING METER
- POSITIVE DISPLACEMENT
- J — TARGET METER
- C — CORIOLIS
- X — TURBINE FLOW METER
- ULTRASONIC FLOW METER
- I — THERMAL MASS FLOW METER
- ORIFICE PLATE C/W TAPS CONNECTED TO INSTRUMENTS
- ORIFICE PLATE IN QUICK-CHANGE FITTING
- CUSTODY/ACCOUNTING ORIFICE METER IN CERTIFIED METER RUN
- ROTAMETER
- SIGHT GLASS
- RUPTURE DISK

UTILITY CONNECTIONS

- SAFETY SHOWER AND EYE WASH
- SAFETY SHOWER
- EYE WASH

MISCELLANEOUS FITTINGS

- HOSE CONNECTION
- PULSATION DAMPENER
- FILTER
- EDUCTOR
- EJECTOR
- SILENCER
- UA — PLANT AIR STATION
- UI — INSTRUMENT AIR STATION
- UD — DRINKING WATER FOUNTAIN
- SPRAY NOZZLE
- COIL HEATER
- EXPANSION JOINT
- FLEXIBLE HOSE
- FLEXIBLE COUPLING
- RS — REMOVABLE SPOOL
- OPEN DRAIN / TUNDISH
- VENTURI
- T — STEAM TRAP
- MT — MOISTURE TRAP
- OVF — INDICATES OVERFLOW POINT
- METAL BRAIDED HOSE
- INSULATION - VESSEL
- DE-SUPERHEATER
- FLAME ARRESTOR
- DIAPHRAGM SEAL
- BIRD SCREEN

VALVES

OPEN CLOSED

- BALL VALVE
- BALL VALVE 3 - WAY
- BALL VALVE 4 - WAY
- CHECK VALVE
- DISC CHECK VALVE
- BALL CHECK VALVE
- DIAPHRAGM VALVE
- PINCH VALVE
- PLUG VALVE
- PLUG VALVE 3 - WAY
- KNIFE GATE VALVE
- NC — NEEDLE VALVE
- NC — BUTTERFLY VALVE OR DAMPER
- ANGLE VALVE
- GATE VALVE
- GLOBE VALVE
- 3-WAY VALVE
- 4-WAY VALVE
- NC — SLIDE GATE VALVE
- PRESSURE SAFETY VALVE
- PRESSURE & VACUUM SAFETY VALVE
- RAM VALVE
- DART VALVE
- ROTARY VALVE
- DIVERTER VALVE

NOZZLES

- FLANGED (In & Out)
- SINGLE FLANGED (In & Out)
- SCREWED NOZZLE
- MW — MANWAY
- IP — INSPECTION PORT
- DIPTUBE NOZZLE

PIPE LINE NUMBERING (IMG-P-0001)

1300-GNI-6000-CB1A-4-HC(25)

- INSULATION THICKNESS
- INSULATION TYPE HEAT TRACING CODE (IF REQUIRED)
- LINE SIZE (NPS)
- PIPING MATERIAL SPECIFICATION
- SEQUENTIAL NUMBER
- SERVICE CODE
- AREA (Pipeline Originating Area)

PROCESS IDENTIFICATION

PEM	PROCESS ELEMENTAL MERCURY
PLW	CAUSTIC LEACH WASTE SOLUTION
PPF	FILTER PRESS FEED/DISCHARGE
PSC	PROCESS SLURRY-ACTIVATED CARBON
PWS	PROCESS WASTE SOLUTION
SCA	CALOMEL SLURRY
SDN	SLURRY DRAINAGE
SLS	SUMP SLURRY
VDT	VENT-DECOMPOSITION TANK
VNT	VENT
VOG	VENT-OFF GAS
WMW	MISCELLANEOUS WASTE WATER
WPR	PROCESS WATER

SERVICES IDENTIFICATION

ACO	COMPRESSED AIR
AIN	INSTRUMENT AIR
GNI	NITROGEN
GOX	OXYGEN
GPR	PROPANE
PHP	MERCURY PRECIPITATE
PTW	TREATED WASTE SOLUTION
WDW	DOMESTIC WATER
WFI	FIRE WATER
WPR	PROCESS WATER
WSA	SANITARY WASTE WATER SYSTEM
WSW	SEWAGE WATER

REAGENTS IDENTIFICATION

RAH	HYDROCHLORIC ACID
RTF	REAGENT TMT-15
RCA	CAUSTIC SODA

LUBE SYSTEM IDENTIFICATION

ODF	DIESEL FUEL

INSULATION & HEAT TRACING CODES

TYPE CODE	DESCRIPTION
AS	ANTI SWEAT
PP	PERSONAL PROTECTION
HC25	HEAT CONSERVATION 25mm THICK
HC50	HEAT CONSERVATION 50mm THICK
HC75	HEAT CONSERVATION 75 mm THICK
HC100	HEAT CONSERVATION 100mm THICK
SR	SOLAR RADIATION
ST	STEAM TRACING
ET	ELECTRICAL TRACING
NA	NOISE ABATEMENT
NI	NO INSULATION

MOBILE PLANT NUMBERING

MOX-YY — MOBIL PLANT — SEQUENTIAL NUMBER

MOA	BACKHOE	MOL	HAMMER HYDRAULIC
MOB	CONTAINER HANDLER	MOM	EXCAVATOR
MOC	DRILL	MON	COMPACTOR PADDED
MOD	FORKLIFT DIESEL	MOO	COMPACTOR SMOOTH
MOE	FORKLIFT GAS	MOP	TRACK DOZER
MOF	FORKLIFT ELECTRIC	MOQ	TRACK DOZER RUBBER
MOG	GRADER	MOR	SLAG HAULER
MOH	LOADER WHELL		
MOI	LOADER SKID STEER	MOT	CAR
MOJ	CRANE ON TRACK	MOU	PERSONNEL CARRIER
MOK	CRANE ON WHEEL	MOV	BUS

VALVE TAG SYSTEM (IMG-P-0001)

VALVE SIZE — 50 — VGA-020

- VALVE TYPE
- VALVE DATA SHEET NUMBER
- VALVE PRESSURE CLASS

AAAA-BBB-xxx

- PLANT AREA
- VALVE TYPE
- VALVE SEQUENCE NUMBER

VALVE TYPE CODES

TYPE CODE	DESCRIPTION
VAN	ANGLE
VBA	BALL
VBF	BUTTERFLY
VCK	CHECK
VGA	GATE
VGL	GLOBE
VKG	KNIFE GATE
VNE	NEEDLE
VPI	PINCH
VPG	PLUG
VRA	RAM
VVV	VENT
VRV	RELIEF
VPV	POST-INDICATOR VALVES

SPECIALTY PIPING ITEM TAG SYSTEM (IMG-P-0001)

- SPECIALTY ITEM CODE TYPE
- SPECIALTY PIPING ITEM
- COMMON NUMBER FOR SAME TYPE THROUGHOUT PLANT

SP - 20086

AAA - SP - xxx

- PLANT AREA
- SPECIAL PIPING ITEM SEQUENCE NUMBER
- SPECIALTY PIPING ITEM

SPECIALTY PIPING ITEM TAG CODES

TYPE CODE	DESCRIPTION
04	HOSES
05	HOSE ADAPTORS
06	FILTRATION/STRAINERS
07	SAFETY ITEMS
08	FLEXIBILITY ITEMS
09	TRAPS
10	DRAINAGE/OVERFLOW
11	FIRE WATER ITEMS
12	TANK/VESSEL ITEMS
13	NON REGISTERED VESSELS
14	SILENCERS
15	DAMPERS/RELIEF DEVICES
16	COUPLINGS & FLANGES (NON-STD)
17	EXTENSION DEVICES/OPERATORS
18	SPACERS/BLANK (NON-STD)
19	VENTS
20	SAFETYSHOWER/EYEWASH
21	HEATING/COOLING DEVICES
22	SPECIAL PIPE FITTINGS
23	SIPHON/VACUUM BREAKERS
24	LAUNDERS
25	MISCELLANEOUS

PIPE MATERIAL TYPE & GRADE

C CARBON STEEL
- A ASTM A53 Gr. A
- B ASTM A53 Gr. B
- C ASTM A106 Gr. A
- D ASTM A106 Gr. B
- E ASTM A106 Gr. C
- F ASTM A333 Gr. 6
- G API-5L Gr.B ERW
- H ASTM A134 Gr. A
- J ASTM A134 Gr. B
- K ASTM A134 Gr. C
- L ASTM A135 Gr. A
- M ASTM A135 Gr. B
- N ASTM A333 Gr. 3

D COATED STEEL
- A ASTM A53 Gr. A (GALVANIZED)
- B ASTM A53 Gr. B (GALVANIZED)
- C ASTM A795 (GALVANIZED)
- D EPOXY COATED

L LINED CARBON STEEL
- A POLYPROPYLENE (PP)
- B POLYETHYLENE (PE)
- C PTFE (TEFLON)
- D PVC (POLYVINYL CHLORIDE)
- E BUTYL RUBBER
- F NATURAL RUBBER AND/OR LINATEX
- G BASALT LINED
- H PVDF
- I CONCRETE

P NON-METALLIC PLASTICS
- A ABC
- B PVC
- C CPVC/PVDC
- D POLYPROPYLENE (PP)
- E POLYETHYLENE (PE)
- F FIBER-REINFORCED PLASTICS (FRP)
- G GLASS-REINFORCED PLASTICS (GRP)
- H HIGH DENSITY POLYETHLENE (HDPE)
- I PVDF
- J POLYBUTYLENE (PB)

S STAINLESS STEEL
- A 304 (UNS S30400)
- B 304H (UNS S30409)
- C 304L (UNS S30403)
- D 316 (UNS S31600)
- E 316H (UNS S30409)
- F 316L (UNS S31603)
- G 309 (UNS S30900)
- H 310 (UNS S31000)
- J 317 (UNS S31700)
- K 321 (UNS S32100)
- L 347 (UNS S34700)
- M 348 (UNS S34800)
- N 310 (SOUR SERVICE) JACKET 316SS
- P 304L (SOUR SERVICE) JACKET A106 Gr.B
- Q 3Cr12 (UNS S41003)
- R 410 (UNS S41000)
- S 440 (UNS S44000)
- T 240 SMO (UNS S31254)

U DUPLEX STAINLESS STEEL
- A ALLOY SAF-2205 (UNS S31803)
- B ALLOY SAF-2304
- C ALLOY SAF-2507 (UNS S32750)
- D FERRALLIUM (UNS S32550)
- E ZERON 100 (UNS S32760)

PRESSURE CLASS

TYPE CODE	DESCRIPTION	TYPE CODE	DESCRIPTION
0	CLASS 125	H	CLASS 350
1	CLASS 150	J	CLASS 1000
2	CLASS 2500	K	CLASS 2000
3	CLASS 300	L	CLASS 4500
4	CLASS 3000	M	CLASS 6000
5	CLASS 1500	N	CLASS 9000
6	CLASS 600	Z	VARIES
7	NON ANSI		BY SIZE
8	CLASS 800		
9	CLASS 900		
A	CLASS 25		
B	CLASS 50		
C	CLASS 75		
D	CLASS 100		
E	CLASS 175		
F	CLASS 200		
G	CLASS 250		

PIPING MATERIAL CLASS

C A 1 A

- SEQUENCE
- PRESSURE CLASS
- MATERIAL GRADE
- MATERIAL TYPE

REFERENCE DRAWINGS

DRAWING NO.	DRAWING TITLE
H340940-0000-75-031-0003	LEGEND SHEET # 3
H340940-0000-75-031-0002	LEGEND SHEET # 2
H340940-0000-75-031-0001	LEGEND SHEET # 1

REVISIONS

NO.	DESCRIPTION	BY	CHK'D	APP'D	DATE

ISSUE AUTHORIZATION

REV.	ISSUE FOR	AUTH.	BY	DATE
D	ISSUE FOR DESIGN	E.C.	S.S.	2012-12-14
C	ISSUE FOR DESIGN	R.A.	S.S.	2012-11-14
B	CLIENT REVIEW	R.A.	S.S.	2012-07-27
A	INTERNAL REVIEW	R.A.	S.S.	2012-06-12

HATCH™

DESIGNED BY M. NENE DATE 2012-06-12	DRAWN BY D. BARNATT DATE 2012-06-12
CHECKED BY M. NENE DATE 2012-06-12	DISCIP. ENGR. J. HEIDA/R. ALADI DATE 2012-06-12
PROJ. DES. COORD. J. CHALMERS DATE 2012-06-12	PROJ. ENGR. S. SENNIK DATE 2012-06-12
PROJ. MGR. M. SUCHARDA DATE 2012-06-12	

PRECIOUS METALS RECOVERY LLC

PRECIOUS METALS RECOVERY LLC
DRY HILLS FACILITY PROJECT

LEGEND SHEET # 2
PIPING AND INSTRUMENTATION DIAGRAM

SCALE NTS OR AS NOTED

DWG. NO. H340940-0000-75-031-0002

REV. D

DWG. NO. H340940-0000-75-031-0003

TANKS

POTABLE/FRESH WATER TANK
OPEN TOP TANK
CLOSED TOP TANK
FUEL TANK
WATER TANK
SETTLING TANK
DOUBLE WALLED TANK
ENCLOSED TANK
AIR RECEIVER
VERTICAL STORAGE TANK
DOSING TANK
SEWAGE LIFT TANK
HORIZONTAL TANK
CHLORINE CONTACT TANK
RBC TANK (ROTATING BIOLOGICAL CONTACTOR)
AERATION TANK
INCINERATOR CHAMBER
BLADDER TANK
PULSATION DAMPENER
NOTE 1
LIQUID GAS STORAGE TANK
COLLECTION/STORAGE TANK
AEROBIC DIGESTER
PRESSURE VESSEL
HORIZONTAL FILTER SEPARATOR
VERTICAL FILTER SEPARATOR
STORAGE BULLET
CONTAINED DOUBLE WALL OIL WATER SEPARATOR
ISO FUEL TANK
REAGENT BARREL

PUMPS

DOSING PUMP
CENTRIFUGAL PUMP
SEWAGE PUMP
ROTARY FEED PUMP
ROTARY PUMP
GEAR PUMP
DIAPHRAGM PUMP
VERTICAL CENTRIFUGE PUMP

FANS & BLOWERS

CENTRIFUGAL FAN
PROCESS AIR COMPRESSOR
AIR COMPRESSOR
COMPRESSOR
AXIAL BLOWER
ROTARY BLOWER

MIXING EQUIPMENT

AGITATOR - BLADE
PLATE MIXER
LOOP MIXER

SUMPS

SUMP PIT WITH PUMP

AIR/GROUND

PICK-UP TRUCK
TRACTOR TRAILER BULK FUEL CARRIER
FORKLIFT

HEAT EXCHANGERS

HEAT EXCHANGER
DIESEL EXHAUST GAS HEAT EXCHANGER
PLATE HEAT EXCHANGER
CONDENSER

NOTES:

1. TO BE INCLUDED ON DISCHARGE OF ALL AIR DIAPHRAGM PUMPS.

MISCELLANEOUS

SCREW CONVEYOR
CLOSE TRAY
OPEN TRAY
PLANT AIR COMPRESSOR FILTER
HOIST AND HOOK
DUST COLLECTOR
CENTRIFUGE
UV DISINFECTION/ CARTRIDGE FILTRATION
DIESEL GENERATOR
VAPORIZER
VENT TRAP
STATIC MIXER
CARTRIDGE FILTERS
SPRAY NOZZLE
ACCUMULATOR
ELEMENTAL MERCURY CONTAINER
SAFETY SHOWER/ EYE WASH STATION
SCRUBBER
ACTIVATED CARBON COLUMN
RETORT
COMPRESSED AIR DRYER
FILTER PRESS
WEIGH SCALE

REFERENCE DRAWINGS

DRAWING NO.	DRAWING TITLE
H340940-0000-75-031-0003	LEGEND SHEET # 3
H340940-0000-75-031-0002	LEGEND SHEET # 2
H340940-0000-75-031-0001	LEGEND SHEET # 1

REVISIONS

NO.	DESCRIPTION	BY	CHK'D	APP'D	DATE

ISSUE AUTHORIZATION

REV.	ISSUE FOR	AUTH. BY		DATE
D	ISSUE FOR DESIGN	E.C.	S.S.	2012-12-14
C	ISSUE FOR DESIGN	R.A.	S.S.	2012-11-14
B	CLIENT REVIEW	R.A.	S.S.	2012-07-27
A	INTERNAL REVIEW	R.A.	S.S.	2012-06-12

HATCH™

DESIGNED BY M. NENE DATE 2012-06-12	DRAWN BY D. BARNATT DATE 2012-06-12
CHECKED BY M. NENE DATE 2012-06-12	DISCIP. ENGR. J. HEIDA/R. ALADI DATE 2012-06-12
PROJ. DES. COORD. J. CHALMERS DATE 2012-06-12	PROJ. ENGR. S. SENNIK DATE 2012-06-12
PROJ. MGR. M. SUCHARDA DATE 2012-06-12	

PRECIOUS METALS RECOVERY LLC

PRECIOUS METALS RECOVERY LLC
DRY HILLS FACILITY PROJECT

LEGEND SHEET # 3
PIPING AND INSTRUMENTATION DIAGRAM

SCALE NTS OR AS NOTED | DWG. NO. H340940-0000-75-031-0003 | REV. D

DWG. NO. H340940-1300-75-031-0001

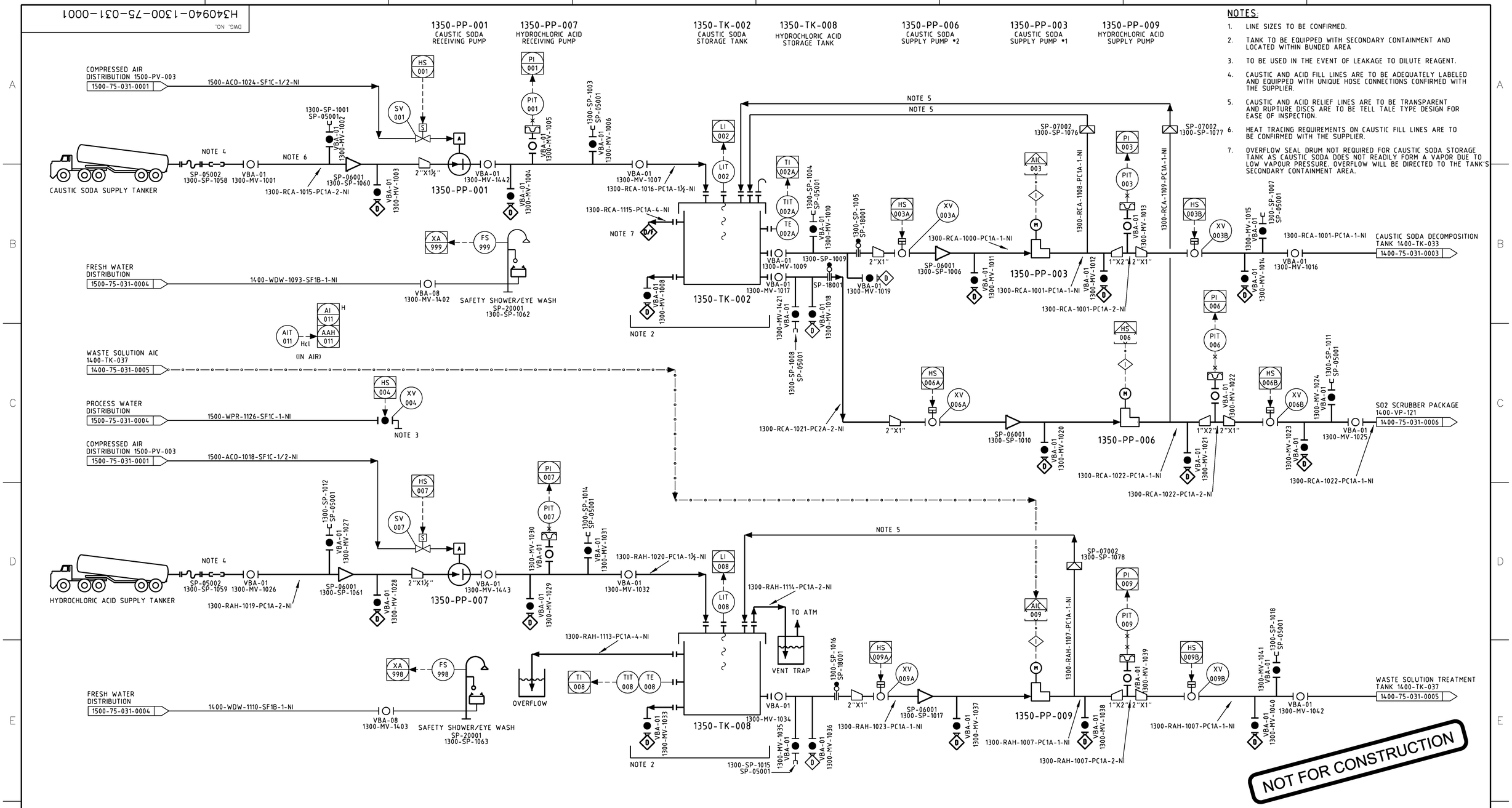

NOTES:

1. LINE SIZES TO BE CONFIRMED.
2. TANK TO BE EQUIPPED WITH SECONDARY CONTAINMENT AND LOCATED WITHIN BUNDED AREA
3. TO BE USED IN THE EVENT OF LEAKAGE TO DILUTE REAGENT.
4. CAUSTIC AND ACID FILL LINES ARE TO BE ADEQUATELY LABELED AND EQUIPPED WITH UNIQUE HOSE CONNECTIONS CONFIRMED WITH THE SUPPLIER.
5. CAUSTIC AND ACID RELIEF LINES ARE TO BE TRANSPARENT AND RUPTURE DISCS ARE TO BE TELL TALE TYPE DESIGN FOR EASE OF INSPECTION.
6. HEAT TRACING REQUIREMENTS ON CAUSTIC FILL LINES ARE TO BE CONFIRMED WITH THE SUPPLIER.
7. OVERFLOW SEAL DRUM NOT REQUIRED FOR CAUSTIC SODA STORAGE TANK AS CAUSTIC SODA DOES NOT READILY FORM A VAPOR DUE TO LOW VAPOUR PRESSURE. OVERFLOW WILL BE DIRECTED TO THE TANK'S SECONDARY CONTAINMENT AREA.

DRAWING NO.	DRAWING TITLE

REFERENCE DRAWINGS

NO.	DESCRIPTION	BY	CHK'D	APP'D	DATE

REVISIONS

REV.	ISSUE FOR	AUTH. BY		DATE
D	ISSUE FOR DESIGN	E.C.	S.S.	2012-12-14
C	ISSUE FOR DESIGN	R.A.	S.S.	2012-11-14
B	CLIENT REVIEW	R.A.	S.S.	2012-07-27
A	INTERNAL REVIEW	R.A.	S.S.	2012-07-13

ISSUE AUTHORIZATION

HATCH™

DESIGNED BY J. HEIDA DATE 2012-07-13	DRAWN BY D. BARNATT DATE 2012-07-13
CHECKED BY M. NENE DATE 2012-07-13	DISCIP. ENGR. J.HEIDA/R.ALADI DATE 2012-07-13
PROJ. DES. COORD. J. CHALMERS DATE 2012-07-13	PROJ. ENGR. S. SENNIK DATE 2012-07-13
PROJ. MGR. M. SUCHARDA DATE 2012-07-13	

PRECIOUS METALS RECOVERY LLC

PRECIOUS METALS RECOVERY LLC
DRY HILLS FACILITY PROJECT

REAGENT STORAGE AND DISTRIBUTION
PIPING AND INSTRUMENTATION DIAGRAM

SCALE NTS OR AS NOTED

DWG. NO. H340940-1300-75-031-0001

REV. D

DWG. NO. H340940-1300-75-031-0002

1310-VP-012
WEIGH STATION

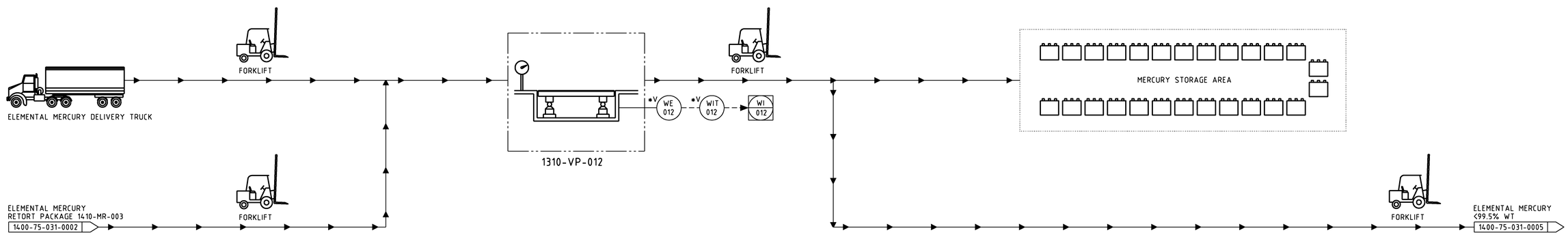

NOT FOR CONSTRUCTION

DRAWING NO.	DRAWING TITLE

REFERENCE DRAWINGS

NO.	DESCRIPTION	BY	CHK'D	APP'D	DATE

REVISIONS

REV.	ISSUE FOR	AUTH. BY		DATE
D	ISSUE FOR DESIGN	E.C.	S.S.	2012-12-14
C	ISSUE FOR DESIGN	R.A.	S.S.	2012-11-14
B	CLIENT REVIEW	R.A.	S.S.	2012-07-27
A	INTERNAL REVIEW	R.A.	S.S.	2012-07-13

ISSUE AUTHORIZATION

HATCH™

DESIGNED BY J. HEIDA DATE 2012-07-13
DRAWN BY D. BARNATT DATE 2012-07-13
CHECKED BY M. NENE DATE 2012-07-13
DISCIP. ENGR. J.HEIDA/R.ALADI DATE 2012-07-13
PROJ. DES. COORD. J. CHALMERS DATE 2012-07-13
PROJ. ENGR. S. SENNIK DATE 2012-07-13
PROJ. MGR. M. SUCHARDA DATE 2012-07-13

PRECIOUS METALS RECOVERY LLC

PRECIOUS METALS RECOVERY LLC
DRY HILLS FACILITY PROJECT

MERCURY HANDLING SYSTEM
PIPING AND INSTRUMENTATION DIAGRAM

SCALE NTS OR AS NOTED

DWG. NO. H340940-1300-75-031-0002

REV. D

DWG. NO. H340940-1400-75-031-0001

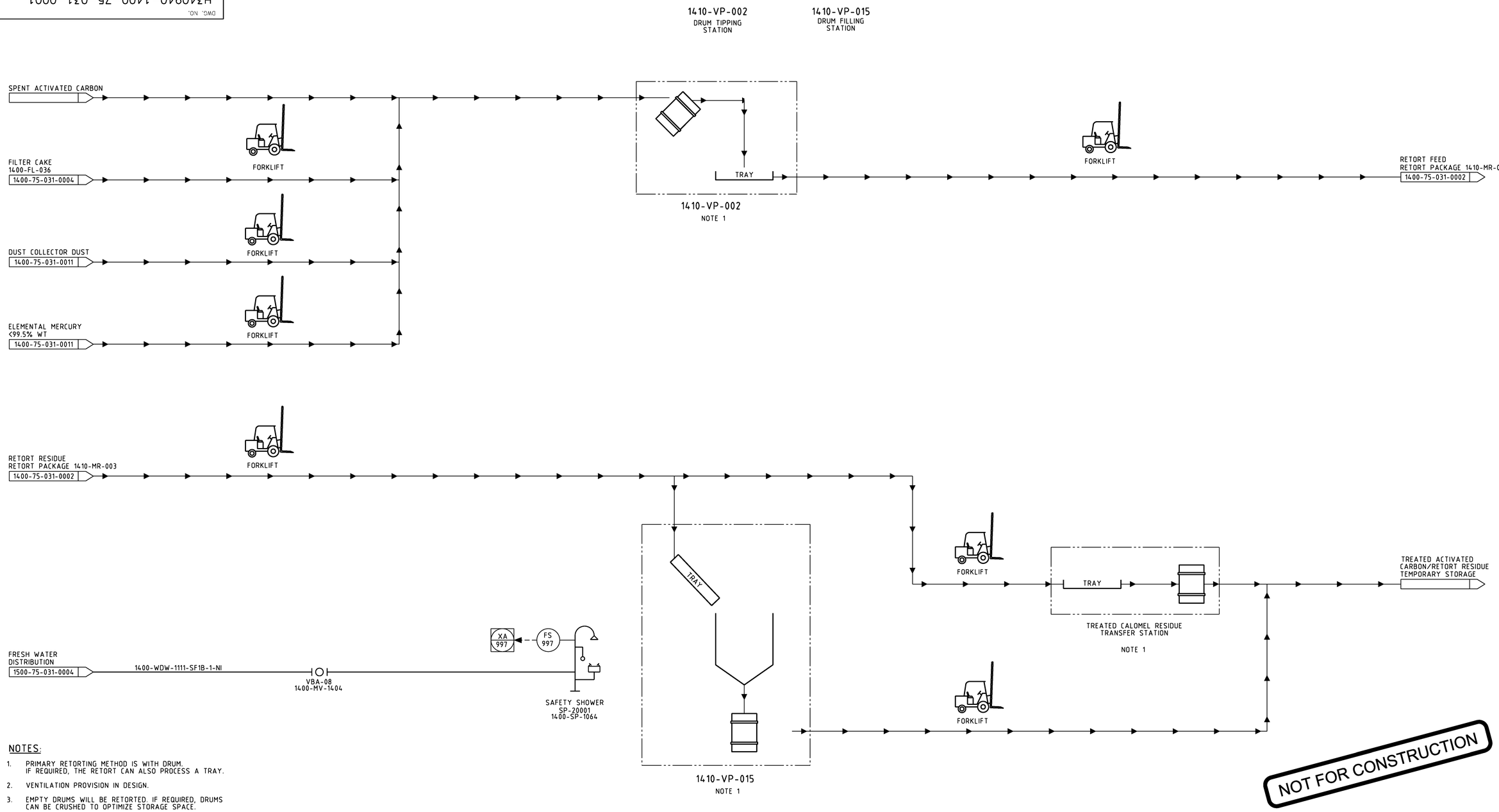

NOTES:

1. PRIMARY RETORTING METHOD IS WITH DRUM. IF REQUIRED, THE RETORT CAN ALSO PROCESS A TRAY.
2. VENTILATION PROVISION IN DESIGN.
3. EMPTY DRUMS WILL BE RETORTED. IF REQUIRED, DRUMS CAN BE CRUSHED TO OPTIMIZE STORAGE SPACE.

DRAWING NO.	DRAWING TITLE

REFERENCE DRAWINGS

NO.	DESCRIPTION	BY	CHK'D	APP'D	DATE

REVISIONS

REV.	ISSUE FOR	AUTH. BY		DATE
D	ISSUE FOR DESIGN	E.C.	S.S.	2012-12-14
C	ISSUE FOR DESIGN	R.A.	S.S.	2012-11-14
B	CLIENT REVIEW	R.A.	S.S.	2012-07-27
A	INTERNAL REVIEW	R.A.	S.S.	2012-07-13

ISSUE AUTHORIZATION

HATCH™

DESIGNED BY J. HEIDA DATE 2012-07-13	DRAWN BY D. BARNATT DATE 2012-07-13
CHECKED BY M. NENE DATE 2012-07-13	DISCIP. ENGR. J.HEIDA/R.ALADI DATE 2012-07-13
PROJ. DES. COORD. J. CHALMERS DATE 2012-07-13	PROJ. ENGR. S. SENNIK DATE 2012-07-13
PROJ. MGR. M. SUCHARDA DATE 2012-07-13	

PRECIOUS METALS RECOVERY LLC

PRECIOUS METALS RECOVERY LLC
DRY HILLS FACILITY PROJECT

RETORT FEED AND
PRODUCT HANDLING AREA
PIPING AND INSTRUMENTATION DIAGRAM

SCALE NTS OR AS NOTED

DWG. NO. H340940-1400-75-031-0001

REV. D

DWG. NO. H340940-1400-75-031-0002

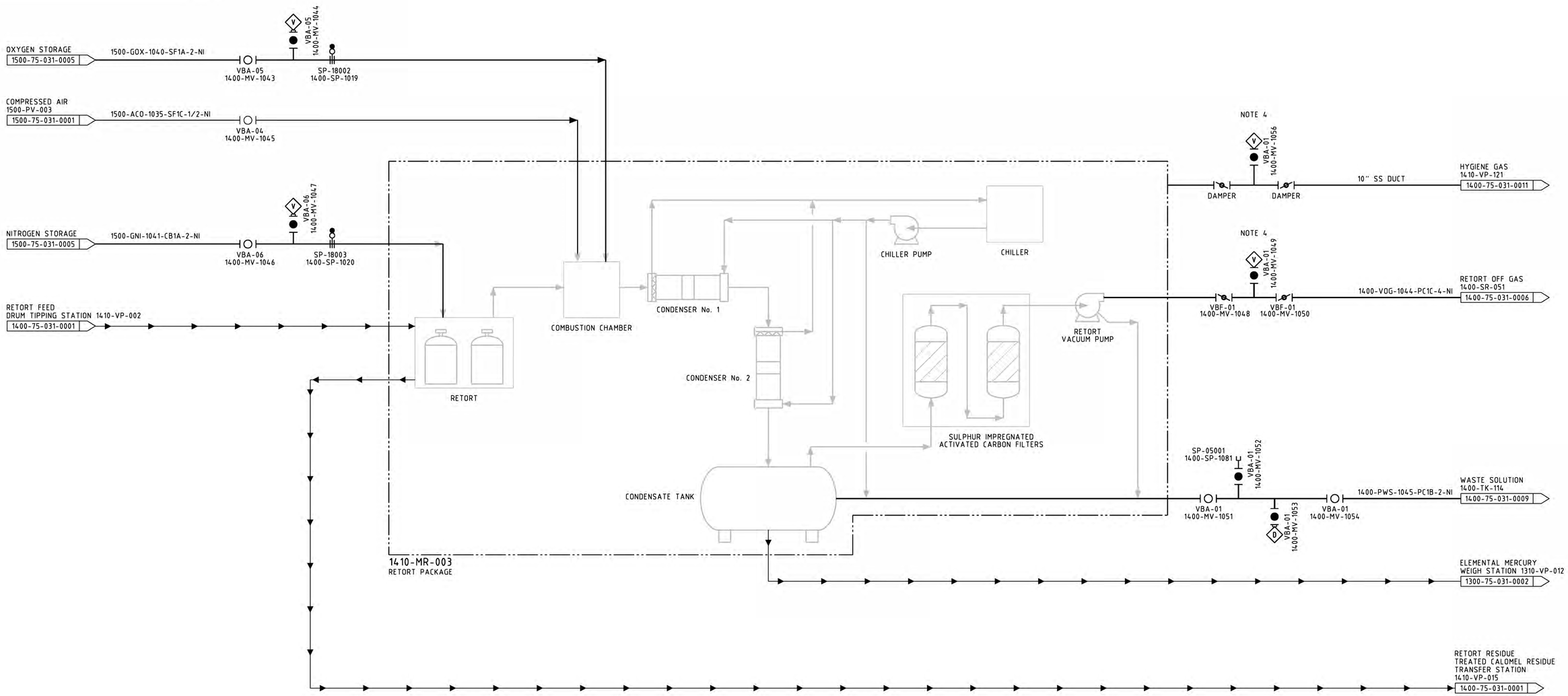

NOTES:

1. ALL VENTS AND DRAINS TO BE DIRECTED TO A SAFE LOCATION.
2. LINE SIZES TO BE CONFIRMED.
3. COMMERCIAL RETORT SPECIFICATION AS PER VENDOR BUDGET QUOTATION (PM007).
4. ALL VENTS CAPTURED BY PLANT HYGIENE EXHAUST SYSTEM.

NOT FOR CONSTRUCTION

DRAWING NO.	DRAWING TITLE

REFERENCE DRAWINGS

NO.	DESCRIPTION	BY	CHK'D	APP'D	DATE

REVISIONS

REV.	ISSUE FOR	AUTH. BY		DATE
D	ISSUE FOR DESIGN	E.C.	S.S.	2012-12-14
C	ISSUE FOR DESIGN	R.A.	S.S.	2012-11-14
B	CLIENT REVIEW	R.A.	S.S.	2012-07-27
A	INTERNAL REVIEW	R.A.	S.S.	2012-07-13

ISSUE AUTHORIZATION

HATCH™

DESIGNED BY J. HEIDA DATE 2012-07-13	DRAWN BY D. BARNATT DATE 2012-07-13
CHECKED BY M. NENE DATE 2012-07-13	DISCIP. ENGR. J.HEIDA/R.ALADI DATE 2012-07-13
PROJ. DES. COORD. J. CHALMERS DATE 2012-07-13	PROJ. ENGR. S. SENNIK DATE 2012-07-13
PROJ. MGR. M. SUCHARDA DATE 2012-07-13	

PRECIOUS METALS RECOVERY LLC

BARRICK GOLDSTRIKE MINES
PRECIOUS METALS RECOVERY PROJECT

RETORT PACKAGE
PIPING AND INSTRUMENTATION DIAGRAM

SCALE NTS OR AS NOTED

DWG. NO. H340940-1400-75-031-0002

REV. D

DWG. NO. H340940-1400-75-031-0003

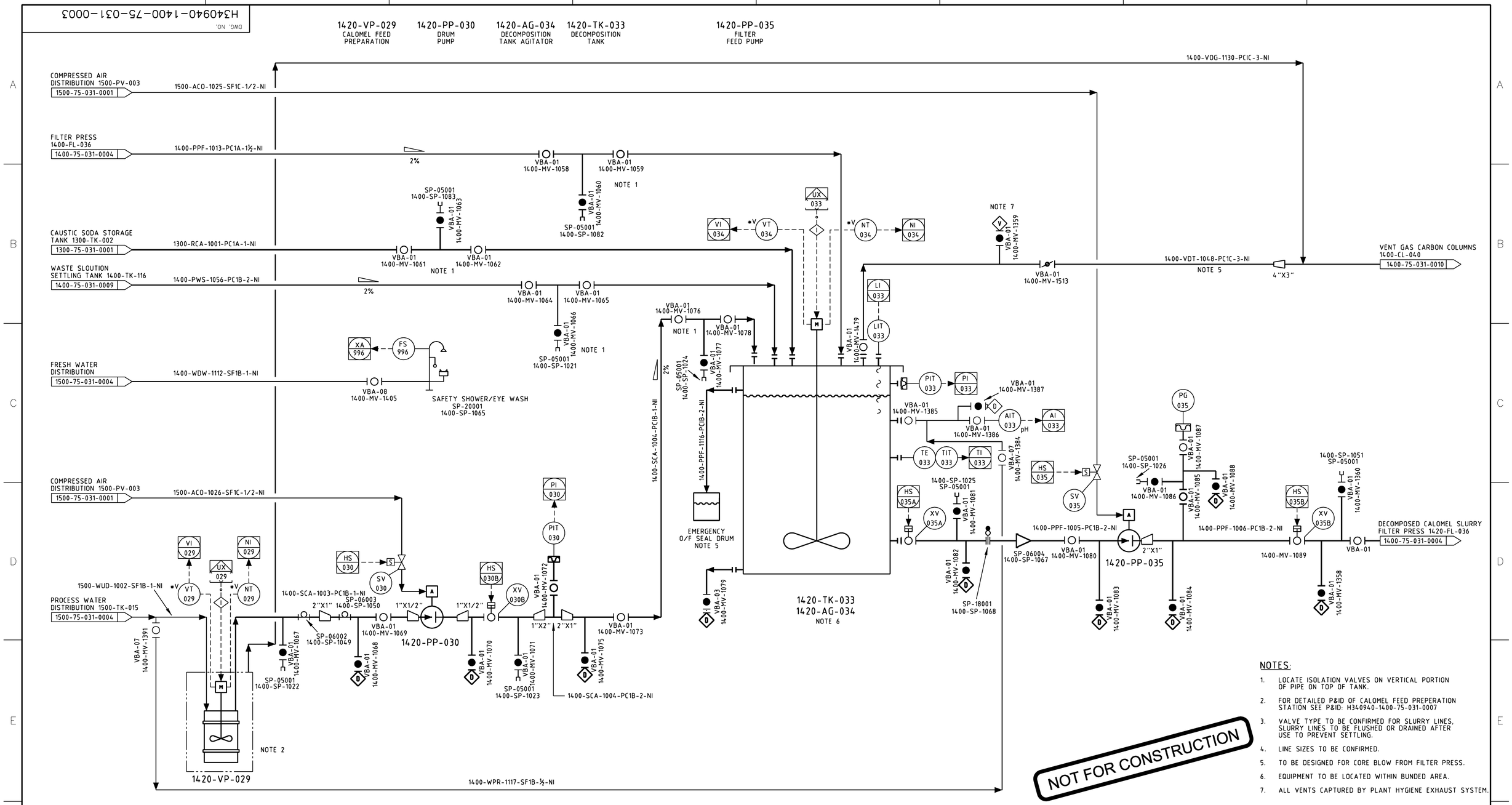

NOTES:

1. LOCATE ISOLATION VALVES ON VERTICAL PORTION OF PIPE ON TOP OF TANK.
2. FOR DETAILED P&ID OF CALOMEL FEED PREPERATION STATION SEE P&ID: H340940-1400-75-031-0007
3. VALVE TYPE TO BE CONFIRMED FOR SLURRY LINES, SLURRY LINES TO BE FLUSHED OR DRAINED AFTER USE TO PREVENT SETTLING.
4. LINE SIZES TO BE CONFIRMED.
5. TO BE DESIGNED FOR CORE BLOW FROM FILTER PRESS.
6. EQUIPMENT TO BE LOCATED WITHIN BUNDED AREA.
7. ALL VENTS CAPTURED BY PLANT HYGIENE EXHAUST SYSTEM.

NOT FOR CONSTRUCTION

DRAWING NO.	DRAWING TITLE

REFERENCE DRAWINGS

NO.	DESCRIPTION	BY	CHK'D	APP'D	DATE

REVISIONS

REV.	ISSUE FOR	AUTH. BY		DATE
E	ISSUE FOR DESIGN	E.C.	S.S.	2013-07-16
D	ISSUE FOR DESIGN	E.C.	S.S.	2012-12-14
C	ISSUE FOR DESIGN	R.A.	S.S.	2012-11-14
B	CLIENT REVIEW	R.A.	S.S.	2012-07-27
A	INTERNAL REVIEW	R.A.	S.S.	2012-07-13

ISSUE AUTHORIZATION

HATCH™

DESIGNED BY J. HEIDA DATE 2012-07-13	DRAWN BY D. BARNATT DATE 2012-07-13
CHECKED BY M. NENE DATE 2012-07-13	DISCIP. ENGR. J.HEIDA/R.ALADI DATE 2012-07-13
PROJ. DES. COORD. J. CHALMERS DATE 2012-07-13	PROJ. ENGR. S. SENNIK DATE 2012-07-13
PROJ. MGR. M. SUCHARDA DATE 2012-07-13	

PRECIOUS METALS RECOVERY LLC

PRECIOUS METALS RECOVERY LLC
DRY HILLS FACILITY PROJECT

CALOMEL TREATMENT
FEED PREPARATION
PIPING AND INSTRUMENTATION DIAGRAM

SCALE NTS OR AS NOTED

DWG. NO. H340940-1400-75-031-0003

REV. E

DWG. NO. H340940-1400-75-031-0004

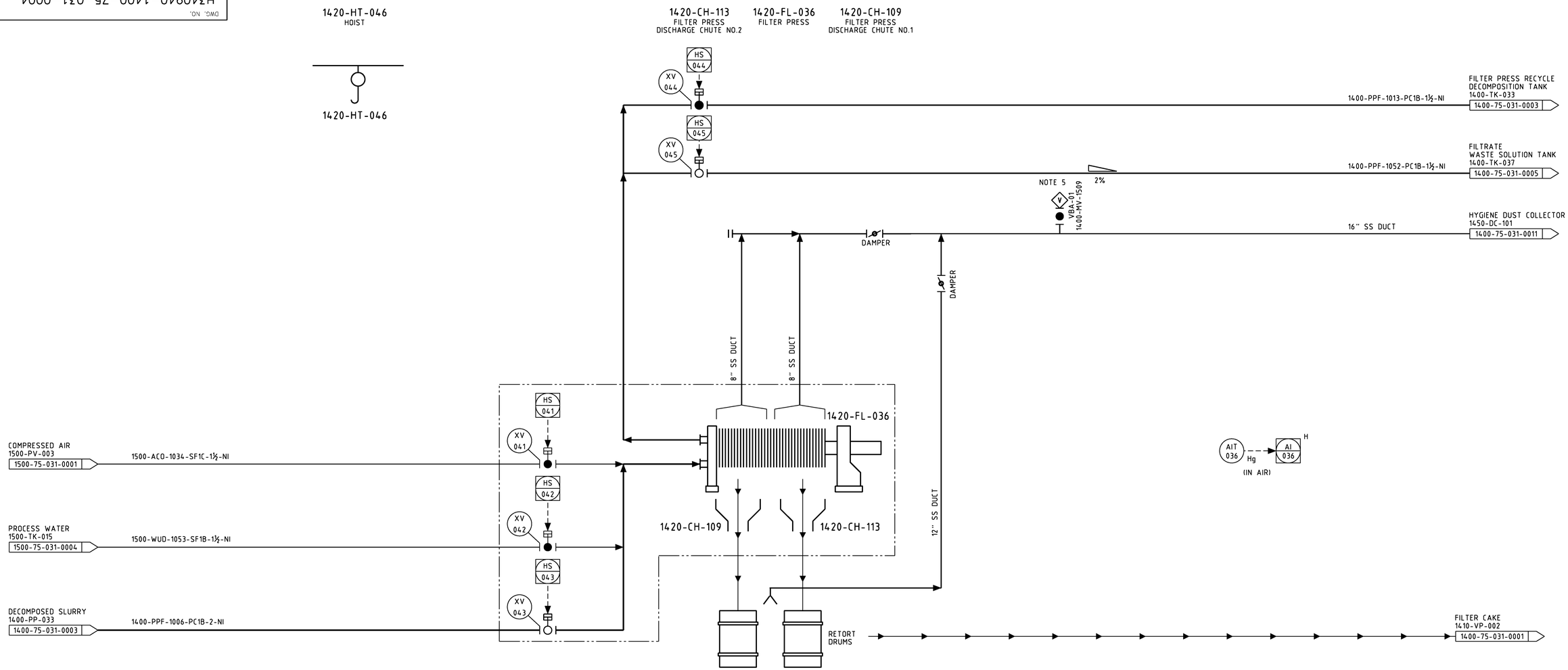

NOTES:

1. BRANCH LINES IN SLURRY SERVICE TO BE PIPED TO TOP OF MAIN.
2. VALVE TYPE TO BE CONFIRMED FOR SLURRY LINES. SLURRY LINES TO BE FLUSHED OR DRAINED TO PREVENT SETTLING.
3. LINE SIZES TO BE CONFIRMED.
4. COMMERCIAL FILTER PRESS SPECIFICATION AS PER VENDOR BUDGET QUOTATION (PM006).
5. ALL VENTS CAPTURED BY PLANT HYGIENE EXHAUST SYSTEM.

NOT FOR CONSTRUCTION

DRAWING NO.	DRAWING TITLE

REFERENCE DRAWINGS

NO.	DESCRIPTION	BY	CHK'D	APP'D	DATE

REVISIONS

REV.	ISSUE FOR	AUTH. BY		DATE
D	ISSUE FOR DESIGN	E.C.	S.S.	2012-12-14
C	ISSUE FOR DESIGN	R.A.	S.S.	2012-11-14
B	CLIENT REVIEW	R.A.	S.S.	2012-07-27
A	INTERNAL REVIEW	R.A.	S.S.	2012-07-13

ISSUE AUTHORIZATION

HATCH™

DESIGNED BY J. HEIDA DATE 2012-07-13	DRAWN BY D. BARNATT DATE 2012-07-13
CHECKED BY M. NENE DATE 2012-07-13	DISCIP. ENGR. J.HEIDA/R.ALADI DATE 2012-07-13
PROJ. DES. COORD. J. CHALMERS DATE 2012-07-13	PROJ. ENGR. S. SENNIK DATE 2012-07-13
PROJ. MGR. M. SUCHARDA DATE 2012-07-13	

PRECIOUS METALS RECOVERY LLC

PRECIOUS METALS RECOVERY LLC
DRY HILLS FACILITY PROJECT

CALOMEL TREATMENT
FILTRATION SYSTEM
PIPING AND INSTRUMENTATION

SCALE NTS OR AS NOTED

DWG. NO. H340940-1400-75-031-0004

REV. D

DWG. NO. H340940-1400-75-031-0005

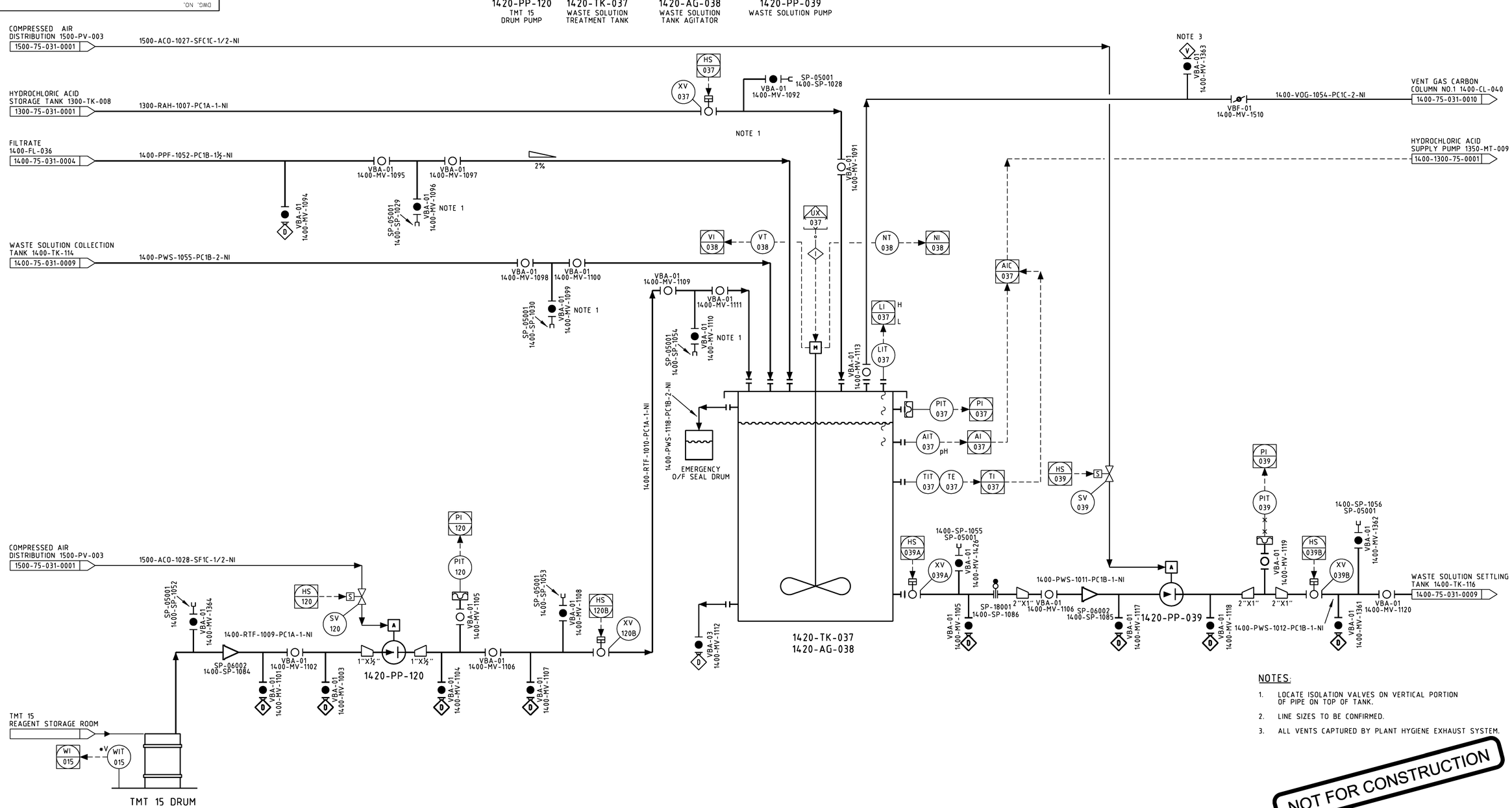

NOTES:

1. LOCATE ISOLATION VALVES ON VERTICAL PORTION OF PIPE ON TOP OF TANK.
2. LINE SIZES TO BE CONFIRMED.
3. ALL VENTS CAPTURED BY PLANT HYGIENE EXHAUST SYSTEM.

NOT FOR CONSTRUCTION

DRAWING NO.	DRAWING TITLE

REFERENCE DRAWINGS

NO.	DESCRIPTION	BY	CHK'D	APP'D	DATE

REVISIONS

REV.	ISSUE FOR	AUTH. BY		DATE
D	ISSUE FOR DESIGN	E.C.	S.S.	2012-12-14
C	ISSUE FOR DESIGN	R.A.	S.S.	2012-11-14
B	CLIENT REVIEW	R.A.	S.S.	2012-07-27
A	INTERNAL REVIEW	R.A.	S.S.	2012-07-13

ISSUE AUTHORIZATION

HATCH™

DESIGNED BY J. HEIDA DATE 2012-07-13	DRAWN BY D. BARNATT DATE 2012-07-13
CHECKED BY M. NENE DATE 2012-07-13	DISCIP. ENGR. J.HEIDA/R.ALADI DATE 2012-07-13
PROJ. DES. COORD. J. CHALMERS DATE 2012-07-13	PROJ. ENGR. S. SENNIK DATE 2012-07-13
PROJ. MGR. M. SUCHARDA DATE 2012-07-13	

PRECIOUS METALS RECOVERY LLC

PRECIOUS METALS RECOVERY LLC
DRY HILLS FACILITY PROJECT

CALOMEL TREATMENT
WASTE SOLUTION
PIPING AND INSTRUMENTATION DIAGRAM

SCALE NTS OR AS NOTED

DWG. NO. H340940-1400-75-031-0005

REV. D

DWG. NO. H340940-1400-75-031-0006

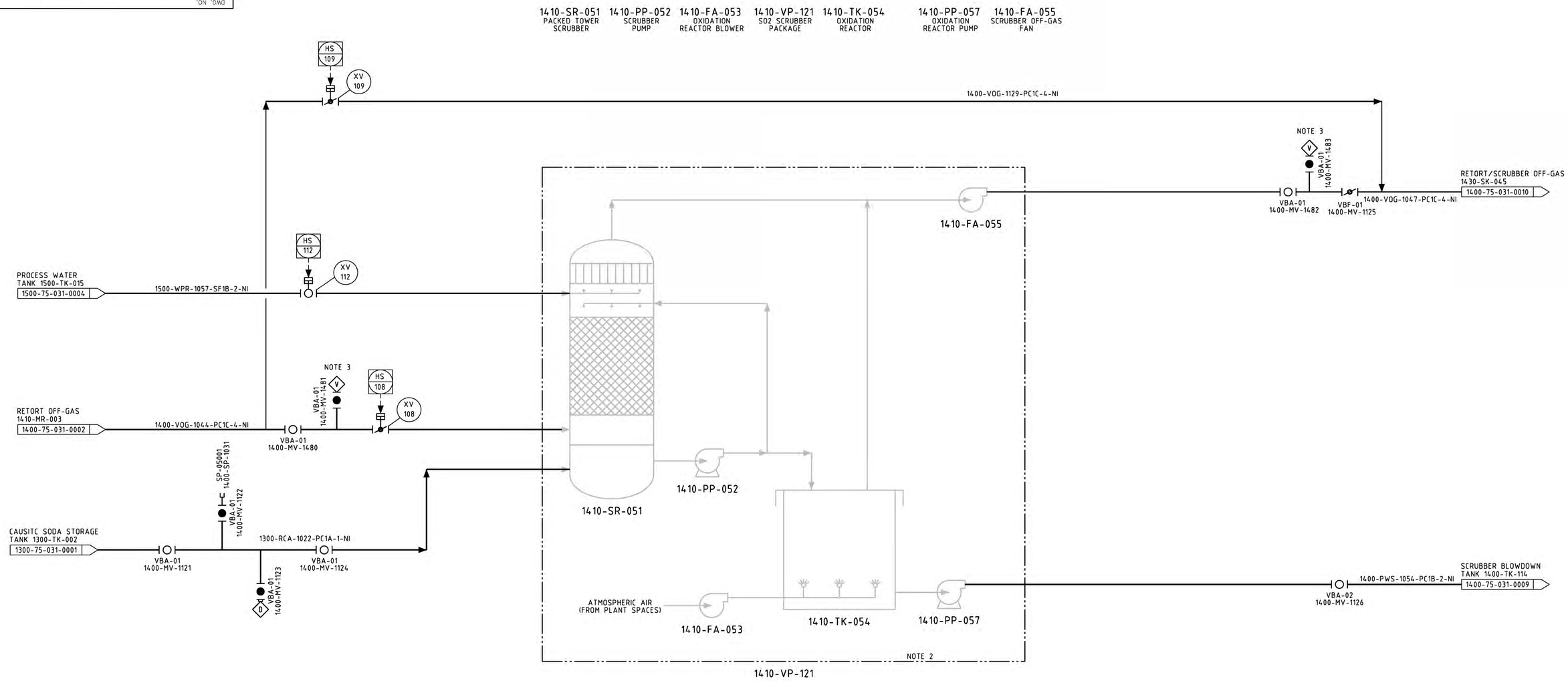

NOTES:

1. LINE SIZES TO BE CONFIRMED.
2. COMMERCIAL SO2 SCRUBBER SPECIFICATION AS PER VENDOR BUDGET QUOTATION (PM008).
3. ALL VENTS CAPTURED BY PLANT HYGIENE EXHAUST SYSTEM.

NOT FOR CONSTRUCTION

DRAWING NO.	DRAWING TITLE

REFERENCE DRAWINGS

NO.	DESCRIPTION	BY	CHK'D	APP'D	DATE

REVISIONS

REV.	ISSUE FOR	AUTH. BY		DATE
D	ISSUE FOR DESIGN	E.C.	S.S.	2012-12-14
C	ISSUE FOR DESIGN	R.A.	S.S.	2012-11-14
B	CLIENT REVIEW	R.A.	S.S.	2012-07-27
A	INTERNAL REVIEW	R.A.	S.S.	2012-07-13

ISSUE AUTHORIZATION

HATCH™

DESIGNED BY J. HEIDA DATE 2012-07-13	DRAWN BY D. BARNATT DATE 2012-07-13
CHECKED BY M. NENE DATE 2012-07-13	DISCIP. ENGR. J.HEIDA/R.ALADI DATE 2012-07-13
PROJ. DES. COORD. J. CHALMERS DATE 2012-07-13	PROJ. ENGR. S. SENNIK DATE 2012-07-13
PROJ. MGR. M. SUCHARDA DATE 2012-07-13	

PRECIOUS METALS RECOVERY LLC

PRECIOUS METALS RECOVERY LLC
DRY HILLS FACILITY PROJECT

RETORT OFF-GAS
SCRUBBER & OXIDATION REACTOR
PIPING AND INSTRUMENTATION DIAGRAM

SCALE NTS OR AS NOTED

DWG. NO. H340940-1400-75-031-0006

REV. D

DWG. NO. H340940-1400-75-031-0007

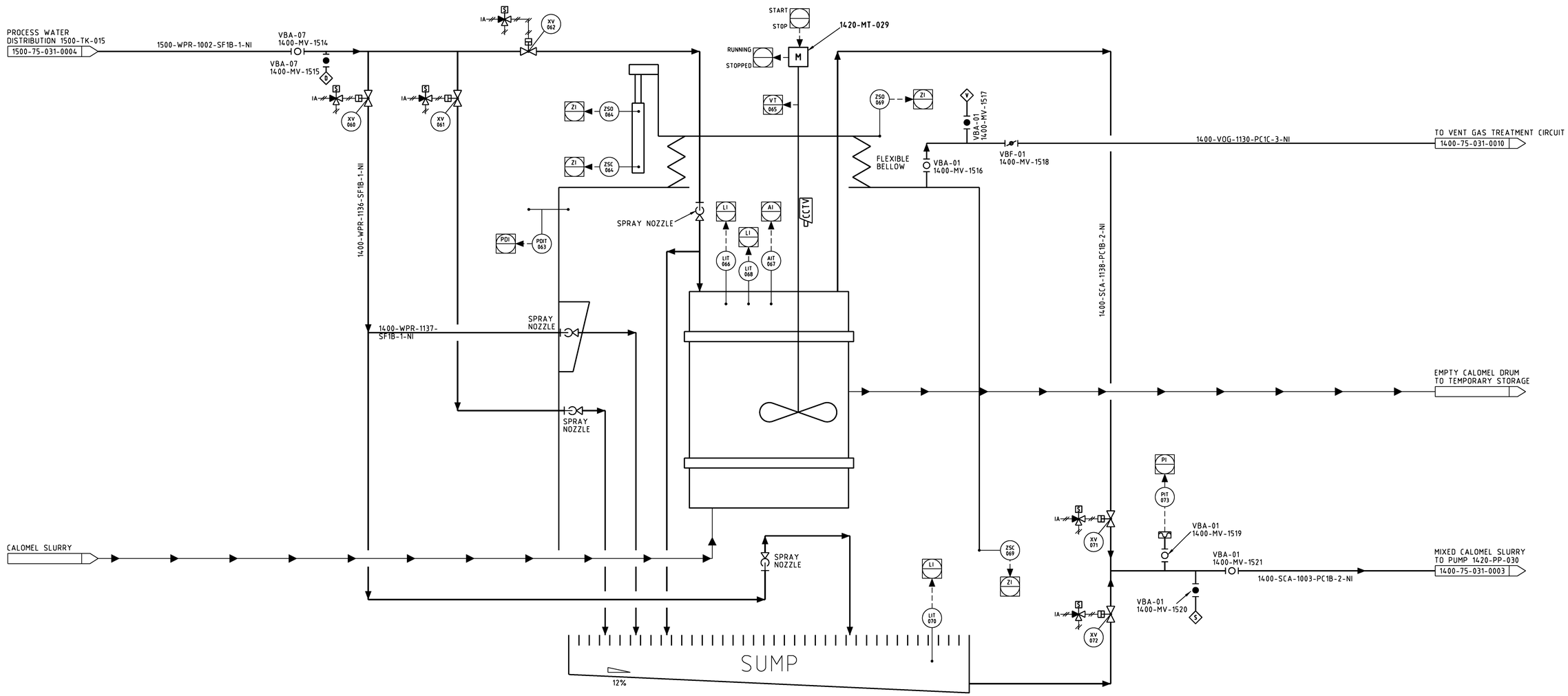

NOTES:

1. THIS P&ID DETAILS THE 1420-VP-029 PACKAGE, CALOMEL FEED PREPARATION.
2. LINE SIZES TO BE CONFIRMED.

DRAWING NO.	DRAWING TITLE

REFERENCE DRAWINGS

NO.	DESCRIPTION	BY	CHK'D	APP'D	DATE

REVISIONS

REV.	ISSUE FOR	AUTH. BY	DATE
C	ISSUE FOR DESIGN	E.C.	S.S. 2012-12-14
B	ISSUE FOR DESIGN	M.D.	S.S. 2012-11-14
A	ISSUE FOR DESIGN	M.D.	S.S. 2012-08-29

ISSUE AUTHORIZATION

HATCH™

DESIGNED BY P. SHADLYN DATE 2012-08-24	DRAWN BY S. WALSH DATE 2012-08-24
CHECKED BY H. SINGH DATE 2012-08-24	DISCIP. ENGR. M. DARINI DATE 2012-08-24
PROJ. DES. COORD. J. CHALMERS DATE 2012-08-24	PROJ. ENGR. S. SENNIK DATE 2012-08-24
PROJ. MGR. M. SUCHARDA DATE 2012-08-24	

PRECIOUS METALS RECOVERY LLC

PRECIOUS METALS RECOVERY LLC
DRY HILLS FACILITY PROJECT

CALOMEL TREATMENT
CALOMEL MIXING
PIPING AND INSTRUMENTATION DIAGRAM

SCALE NTS OR AS NOTED

DWG. NO. H340940-1400-75-031-0007

REV. C

DWG. NO. H340940-1400-75-031-0008

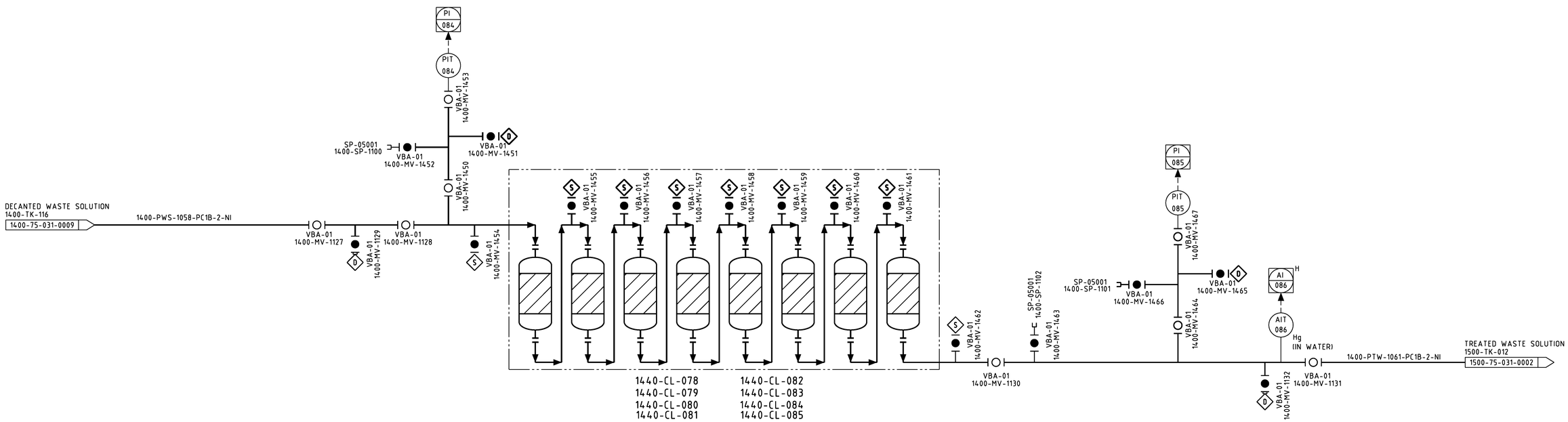

NOTES:

1. LINE SIZES TO BE CONFIRMED.

NOT FOR CONSTRUCTION

DRAWING NO.	DRAWING TITLE

REFERENCE DRAWINGS

NO.	DESCRIPTION	BY	CHK'D	APP'D	DATE

REVISIONS

REV.	ISSUE FOR	AUTH. BY		DATE
D	ISSUE FOR DESIGN	E.C.	S.S.	2012-12-14
C	ISSUE FOR DESIGN	R.A.	S.S.	2012-11-14
B	CLIENT REVIEW	R.A.	S.S.	2012-07-27
A	INTERNAL REVIEW	R.A.	S.S.	2012-07-13

ISSUE AUTHORIZATION

HATCH™

DESIGNED BY J. HEIDA DATE 2012-07-13	DRAWN BY D. BARNATT DATE 2012-07-13
CHECKED BY M. NENE DATE 2012-07-13	DISCIP. ENGR. J.HEIDA/R.ALADI DATE 2012-07-13
PROJ. DES. COORD. J. CHALMERS DATE 2012-07-13	PROJ. ENGR. S. SENNIK DATE 2012-07-13
PROJ. MGR. M. SUCHARDA DATE 2012-07-13	

PRECIOUS METALS RECOVERY LLC

PRECIOUS METALS RECOVERY LLC
DRY HILLS FACILITY PROJECT

PROCESS PLANT
WASTE SOLUTION TREATMENT
PIPING AND INSTRUMENTATION DIAGRAM

SCALE NTS OR AS NOTED

DWG. NO. H340940-1400-75-031-0008

REV. D

DWG. NO. H340940-1400-75-031-0009

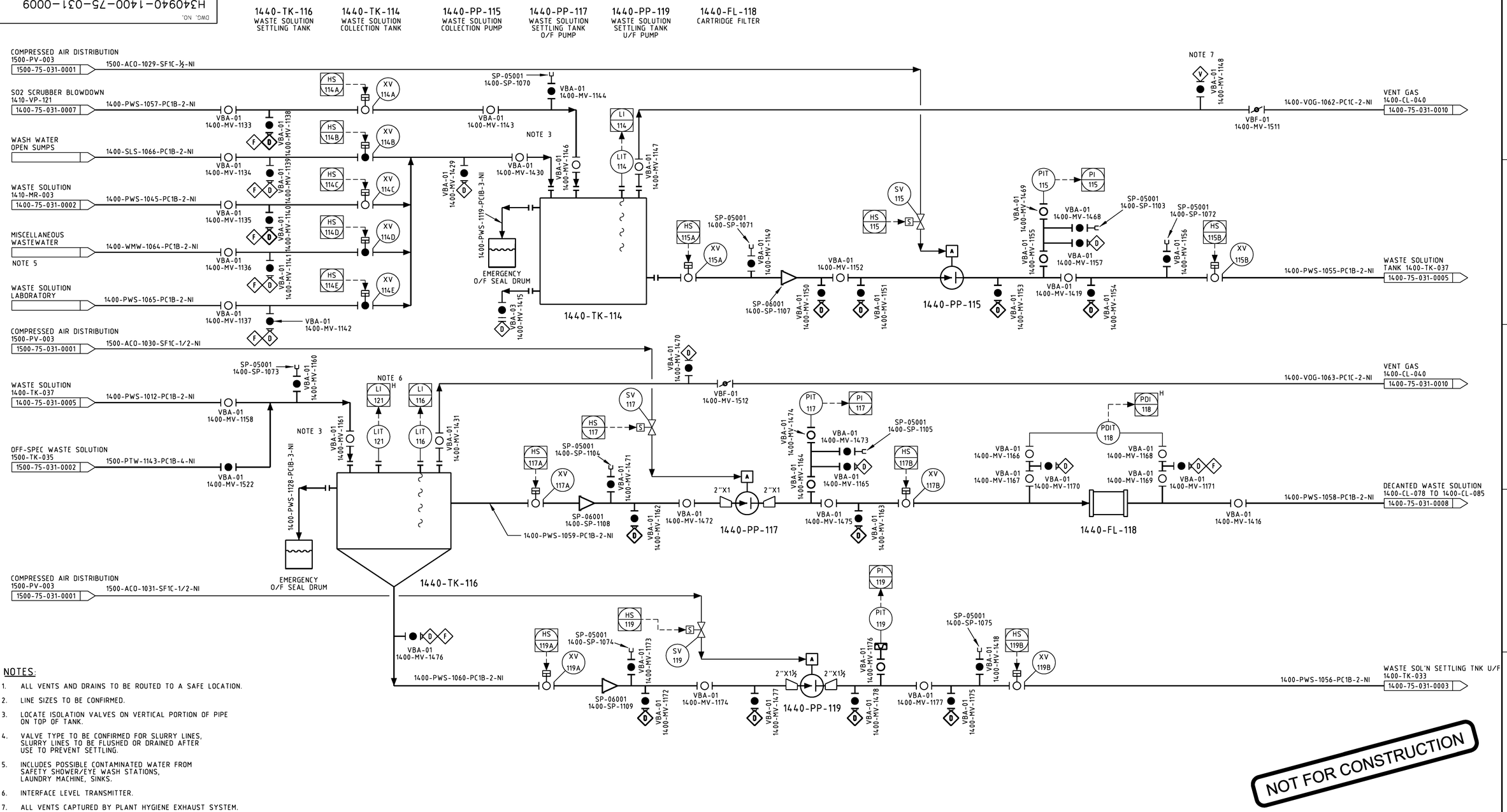

NOTES:

1. ALL VENTS AND DRAINS TO BE ROUTED TO A SAFE LOCATION.
2. LINE SIZES TO BE CONFIRMED.
3. LOCATE ISOLATION VALVES ON VERTICAL PORTION OF PIPE ON TOP OF TANK.
4. VALVE TYPE TO BE CONFIRMED FOR SLURRY LINES, SLURRY LINES TO BE FLUSHED OR DRAINED AFTER USE TO PREVENT SETTLING.
5. INCLUDES POSSIBLE CONTAMINATED WATER FROM SAFETY SHOWER/EYE WASH STATIONS, LAUNDRY MACHINE, SINKS.
6. INTERFACE LEVEL TRANSMITTER.
7. ALL VENTS CAPTURED BY PLANT HYGIENE EXHAUST SYSTEM.

NOT FOR CONSTRUCTION

DRAWING NO.	DRAWING TITLE

REFERENCE DRAWINGS

NO.	DESCRIPTION	BY	CHK'D	APP'D	DATE

REVISIONS

REV.	ISSUE FOR	AUTH.	BY	DATE
D	ISSUE FOR DESIGN	E.C.	S.S.	2012-12-14
C	ISSUE FOR DESIGN	R.A.	S.S.	2012-11-14
B	CLIENT REVIEW	R.A.	S.S.	2012-07-27
A	INTERNAL REVIEW	R.A.	S.S.	2012-07-13

ISSUE AUTHORIZATION

HATCH™

DESIGNED BY J. HEIDA DATE 2012-07-13	DRAWN BY D. BARNATT DATE 2012-07-13
CHECKED BY M. NENE DATE 2012-07-13	DISCIP. ENGR. J.HEIDA/R.ALADI DATE 2012-07-13
PROJ. DES. COORD. J. CHALMERS DATE 2012-07-13	PROJ. ENGR. S. SENNIK DATE 2012-07-13
PROJ. MGR. M. SUCHARDA DATE 2012-07-13	

PRECIOUS METALS RECOVERY LLC

PRECIOUS METALS RECOVERY LLC
DRY HILLS FACILITY PROJECT

PROCESS SYSTEM
WASTE SOLUTION COLLECTION AND SETTLING
PIPING AND INSTRUMENTATION DIAGRAM

SCALE NTS OR AS NOTED

DWG. NO. H340940-1400-75-031-0009

REV. D

DWG. NO. H340940-1400-75-031-0010

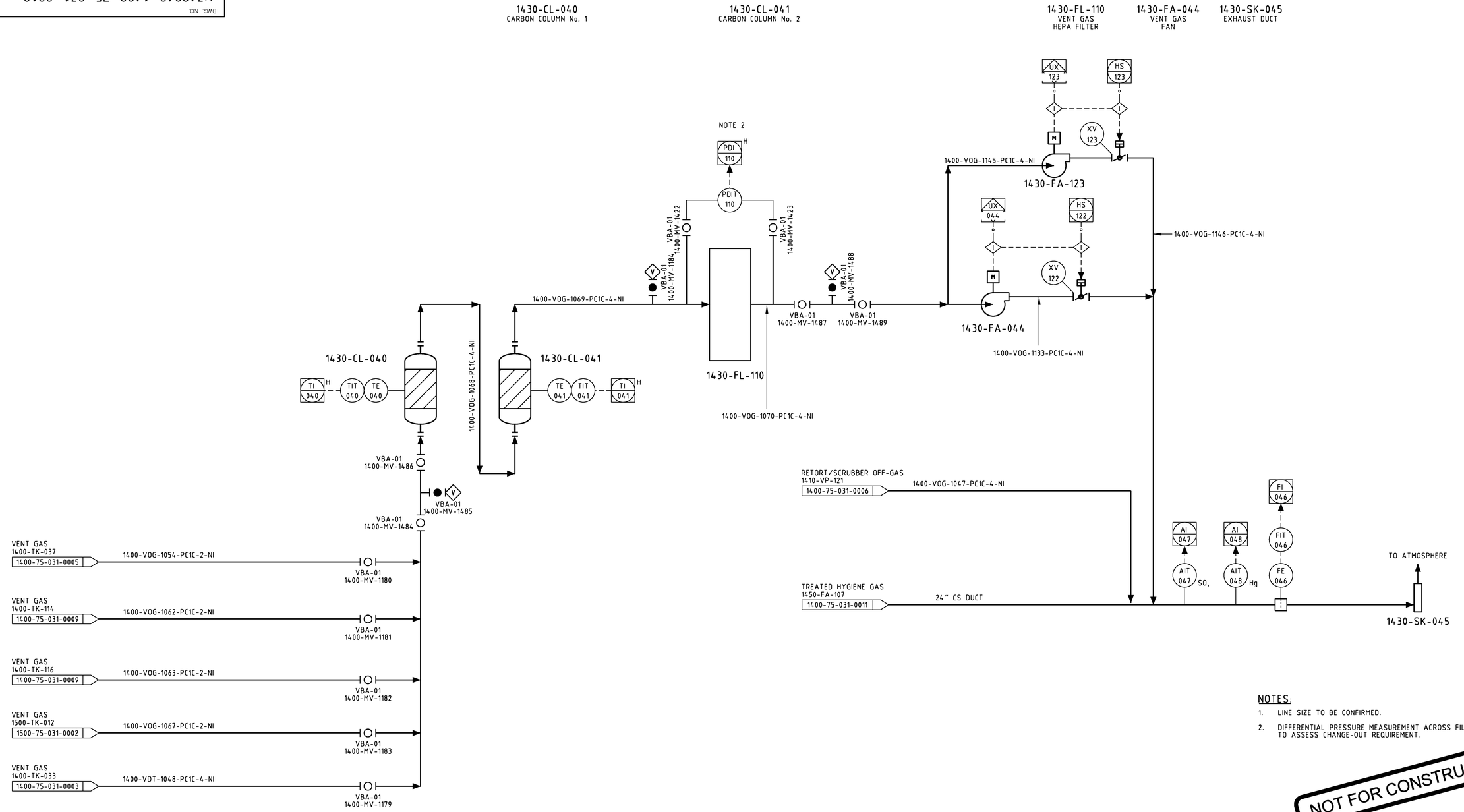

NOTES:

1. LINE SIZE TO BE CONFIRMED.
2. DIFFERENTIAL PRESSURE MEASUREMENT ACROSS FILTER TO ASSESS CHANGE-OUT REQUIREMENT.

NOT FOR CONSTRUCTION

DRAWING NO.	DRAWING TITLE

REFERENCE DRAWINGS

NO.	DESCRIPTION	BY	CHK'D	APP'D	DATE

REVISIONS

REV.	ISSUE FOR	AUTH. BY		DATE
D	ISSUE FOR DESIGN	E.C.	S.S.	2012-12-14
C	ISSUE FOR DESIGN	R.A.	S.S.	2012-11-14
B	CLIENT REVIEW	R.A.	S.S.	2012-07-27
A	INTERNAL REVIEW	R.A.	S.S.	2012-07-13

ISSUE AUTHORIZATION

HATCH™

DESIGNED BY J. HEIDA DATE 2012-07-13	DRAWN BY D. BARNATT DATE 2012-07-13
CHECKED BY M. NENE DATE 2012-07-13	DISCIP. ENGR. J.HEIDA/R.ALADI DATE 2012-07-13
PROJ. DES. COORD. J. CHALMERS DATE 2012-07-13	PROJ. ENGR. S. SENNIK DATE 2012-07-13
PROJ. MGR. M. SUCHARDA DATE 2012-07-13	

PRECIOUS METALS RECOVERY LLC

PRECIOUS METALS RECOVERY LLC
DRY HILLS FACILITY PROJECT

CALOMEL TREATMENT
VENT GAS TREATMENT
PIPING AND INSTRUMENTATION DIAGRAM

SCALE NTS OR AS NOTED

DWG. NO. H340940-1400-75-031-0010

REV. D

DWG. NO. H340940-1400-75-031-0011

1450-DC-101	1450-CV-102	1450-FE-111	1450-HO-103	1450-FL-105	1450-FL-106	1450-FA-107	1450-FA-112
DUST COLLECTOR	DUST COLLECTOR SCREW CONVEYOR	DUCT COLLECTOR ROTARY VALVE	DUST COLLECTOR DRUM HOOD	HEPA FILTER	CARBON FILTER	HYGIENE FAN NO. 1	STAND-BY HYGIENE FAN NO.2

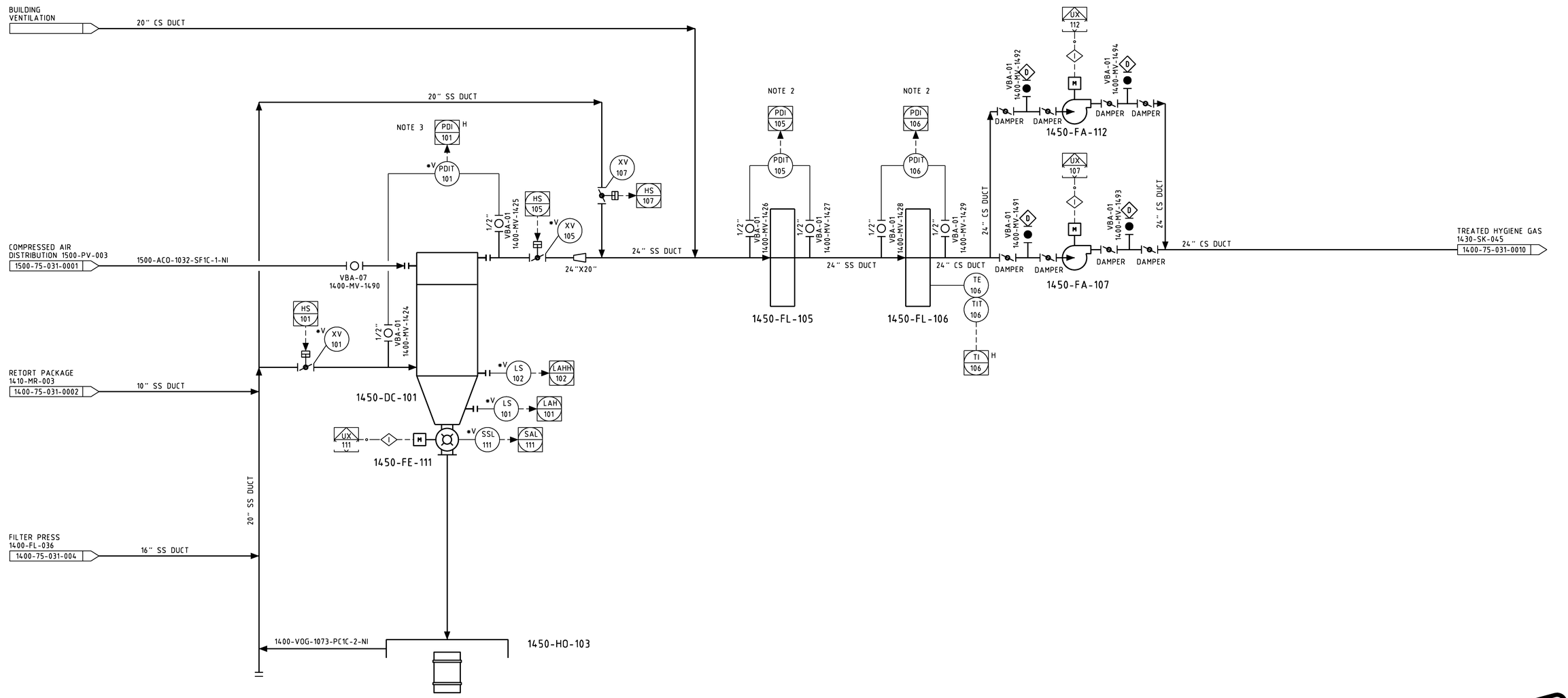

NOTES:

1. LINE SIZES TO BE CONFIRMED.
2. DIFFERENTIAL PRESSURE MEASUREMENT ACROSS FILTER TO ASSESS CHANGE-OUT REQUIREMENT.
3. DIFFERENTIAL PRESSURE MEASUREMENT ACROSS DUST COLLECTOR TO ASSESS CHANGE-OUT REQUIREMENT.

NOT FOR CONSTRUCTION

DRAWING NO.	DRAWING TITLE

REFERENCE DRAWINGS

NO.	DESCRIPTION	BY	CHK'D	APP'D	DATE

REVISIONS

REV.	ISSUE FOR	AUTH. BY		DATE
D	ISSUE FOR DESIGN	E.C.	S.S.	2012-12-14
C	ISSUE FOR DESIGN	R.A.	S.S.	2012-11-14
B	CLIENT REVIEW	R.A.	S.S.	2012-07-27
A	INTERNAL REVIEW	R.A.	S.S.	2012-07-13

ISSUE AUTHORIZATION

HATCH™

DESIGNED BY J. HEIDA DATE 2012-07-13	DRAWN BY D. BARNATT DATE 2012-07-13
CHECKED BY M. NENE DATE 2012-07-13	DISCIP. ENGR. J.HEIDA/R.ALADI DATE 2012-07-13
PROJ. DES. COORD. J. CHALMERS DATE 2012-07-13	PROJ. ENGR. S. SENNIK DATE 2012-07-13
PROJ. MGR. M. SUCHARDA DATE 2012-07-13	

PRECIOUS METALS RECOVERY LLC

PRECIOUS METALS RECOVERY LLC
DRY HILLS FACILITY PROJECT

HYGIENE GAS SYSTEM
PIPING AND INSTRUMENTATION DIAGRAM

SCALE NTS OR AS NOTED

DWG. NO. H340940-1400-75-031-0011

REV. D

DWG. NO. H340940-1500-75-031-0001

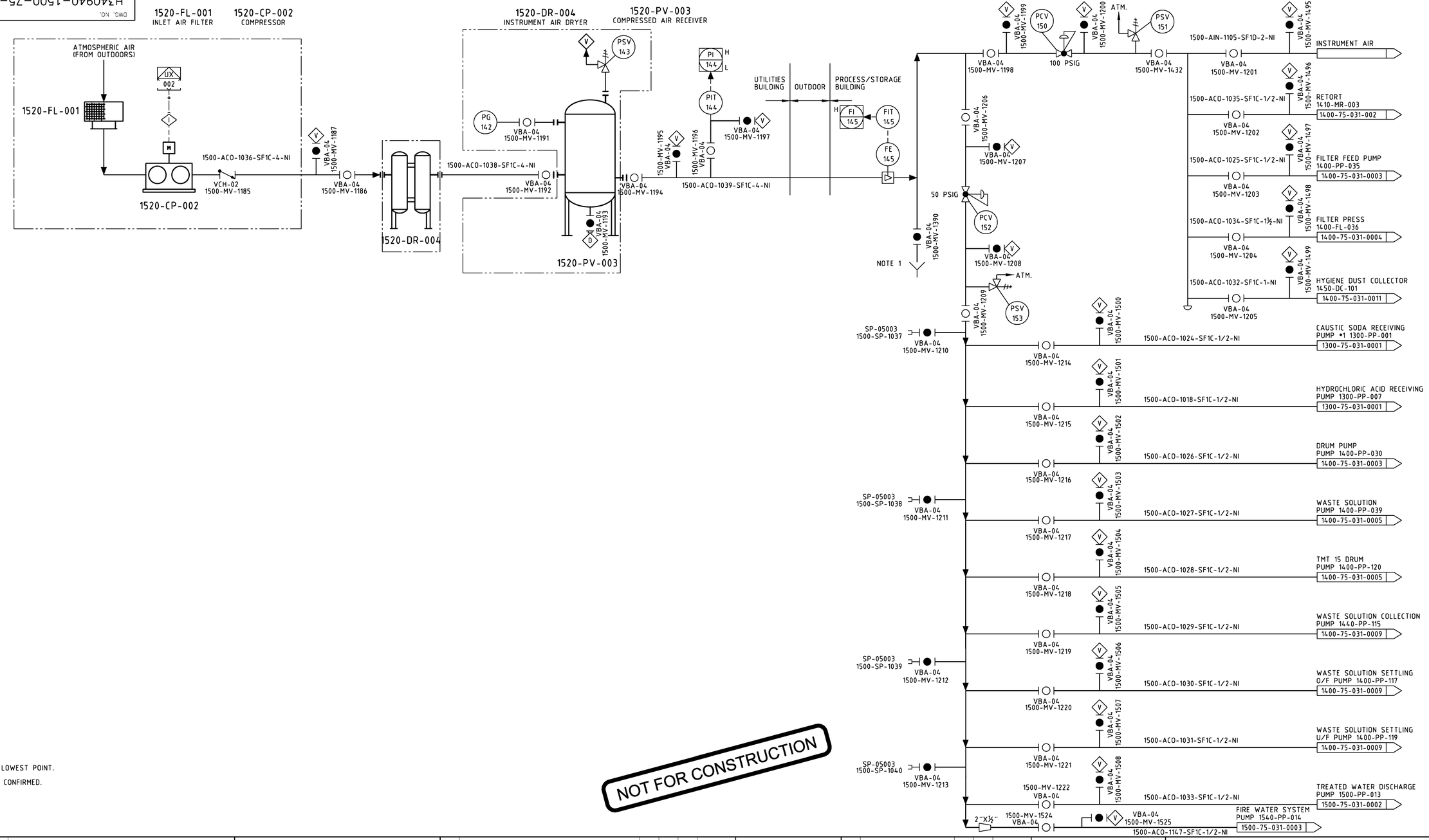

NOTE:

1. DRAIN VALVE AT LOWEST POINT.
2. LINE SIZES TO BE CONFIRMED.

NOT FOR CONSTRUCTION

DRAWING NO.	DRAWING TITLE

REFERENCE DRAWINGS

NO.	DESCRIPTION	BY	CHK'D	APP'D	DATE

REVISIONS

REV.	ISSUE FOR	AUTH. BY		DATE
D	ISSUE FOR DESIGN	E.C.	S.S.	2012-12-14
C	ISSUE FOR DESIGN	R.A.	S.S.	2012-11-14
B	CLIENT REVIEW	R.A.	S.S.	2012-07-27
A	INTERNAL REVIEW	R.A.	S.S.	2012-07-13

ISSUE AUTHORIZATION

HATCH™

DESIGNED BY J. HEIDA DATE 2012-07-13	DRAWN BY D. BARNATT DATE 2012-07-13
CHECKED BY M. NENE DATE 2012-07-13	DISCIP. ENGR. J.HEIDA/R.ALADI DATE 2012-07-13
PROJ. DES. COORD. J. CHALMERS DATE 2012-07-13	PROJ. ENGR. S. SENNIK DATE 2012-07-13
PROJ. MGR. M. SUCHARDA DATE 2012-07-13	

PRECIOUS METALS RECOVERY LLC

PRECIOUS METALS RECOVERY LLC
DRY HILLS FACILITY PROJECT

COMPRESSED AND INSTRUMENT AIR SYSTEM
PIPING AND INSTRUMENTATION DIAGRAM

SCALE NTS OR AS NOTED

DWG. NO. H340940-1500-75-031-0001

REV. D

DWG. NO. H340940-1500-75-031-0002

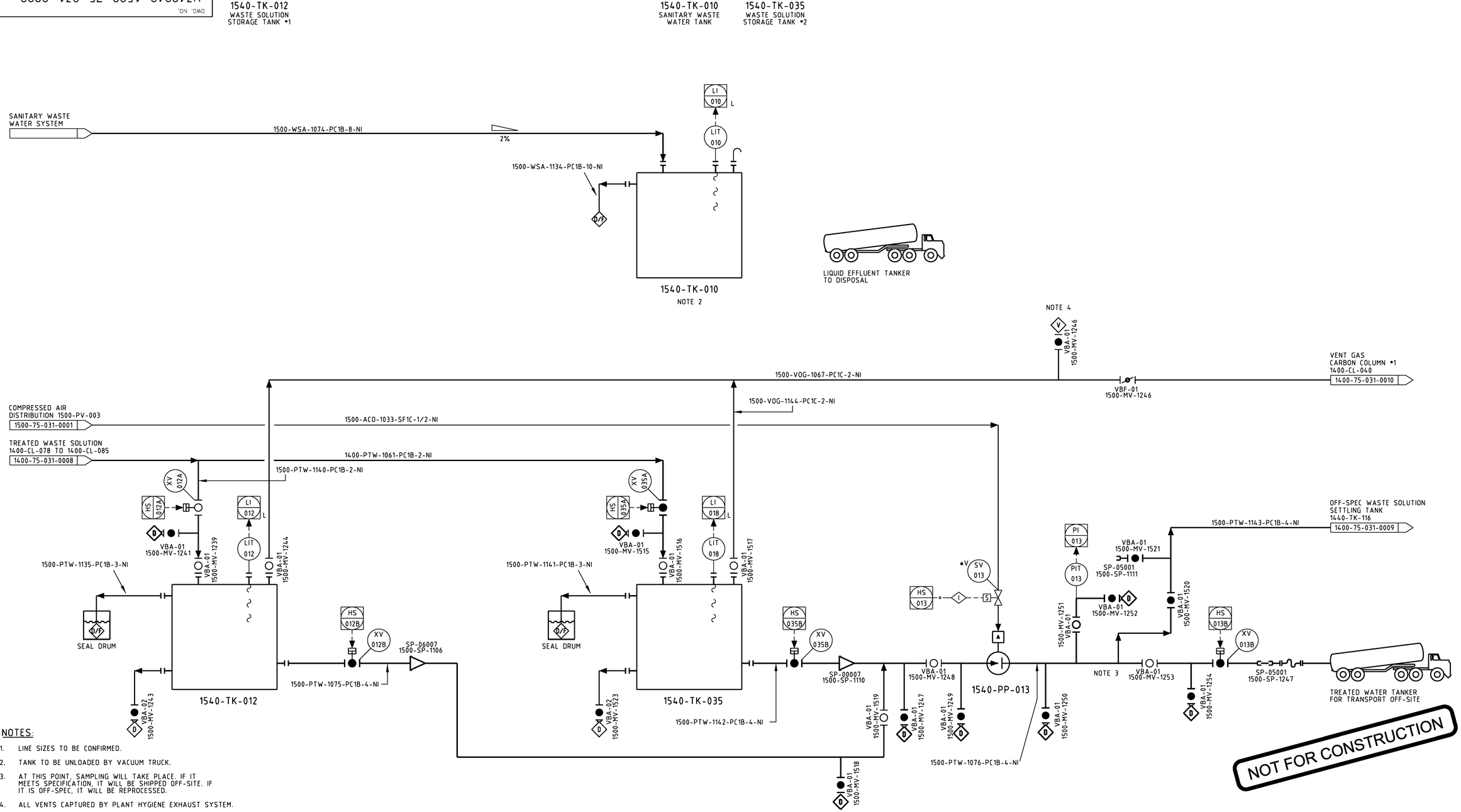

NOTES:

1. LINE SIZES TO BE CONFIRMED.
2. TANK TO BE UNLOADED BY VACUUM TRUCK.
3. AT THIS POINT, SAMPLING WILL TAKE PLACE. IF IT MEETS SPECIFICATION, IT WILL BE SHIPPED OFF-SITE. IF IT IS OFF-SPEC, IT WILL BE REPROCESSED.
4. ALL VENTS CAPTURED BY PLANT HYGIENE EXHAUST SYSTEM.

DRAWING NO.	DRAWING TITLE

REFERENCE DRAWINGS

NO.	DESCRIPTION	BY	CHK'D	APP'D	DATE

REVISIONS

REV.	ISSUE FOR	AUTH. BY		DATE
D	ISSUE FOR DESIGN	E.C.	S.S.	2012-12-14
C	ISSUE FOR DESIGN	R.A.	S.S.	2012-11-14
B	CLIENT REVIEW	R.A.	S.S.	2012-07-27
A	INTERNAL REVIEW	R.A.	S.S.	2012-07-13

ISSUE AUTHORIZATION

HATCH™

DESIGNED BY J. HEIDA DATE 2012-07-13	DRAWN BY D. BARNATT DATE 2012-07-13
CHECKED BY M. NENE DATE 2012-07-13	DISCIP. ENGR. J.HEIDA/R.ALADI DATE 2012-07-13
PROJ. DES. COORD. J. CHALMERS DATE 2012-07-13	PROJ. ENGR. S. SENNIK DATE 2012-07-13
PROJ. MGR. M. SUCHARDA DATE 2012-07-13	

PRECIOUS METALS RECOVERY LLC

PRECIOUS METALS RECOVERY LLC
DRY HILLS FACILITY PROJECT

WATER STORAGE AND DISPOSAL
PIPING AND INSTRUMENTATION DIAGRAM

SCALE NTS OR AS NOTED

DWG. NO. H340940-1500-75-031-0002

REV. D

DWG. NO. H340940-1500-75-031-0003

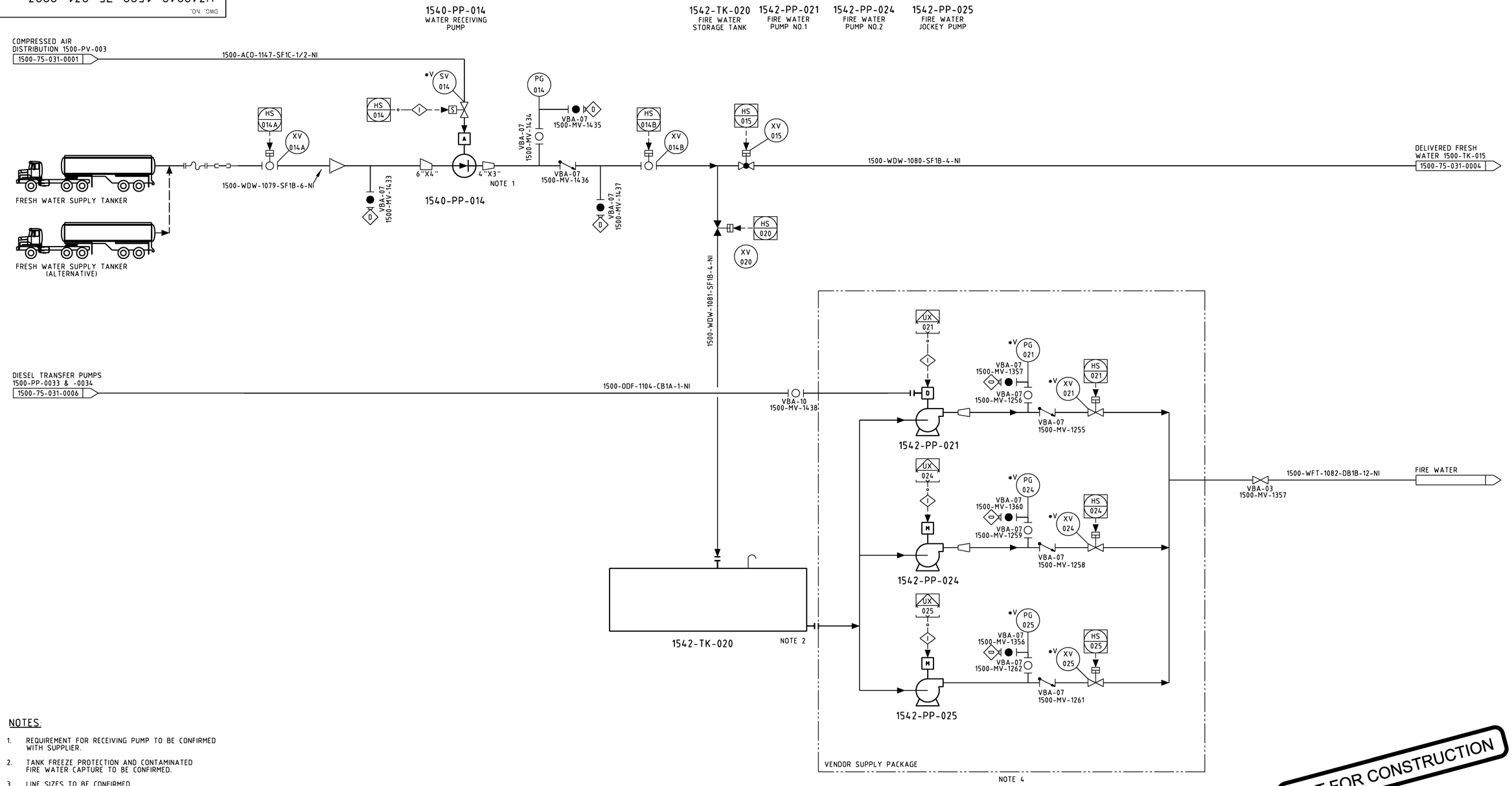

NOTES:

1. REQUIREMENT FOR RECEIVING PUMP TO BE CONFIRMED WITH SUPPLIER.
2. TANK FREEZE PROTECTION AND CONTAMINATED FIRE WATER CAPTURE TO BE CONFIRMED.
3. LINE SIZES TO BE CONFIRMED.
4. IN THE UNLIKELY EVENT OF A FIRE LASTING LONGER THAN 2 HOURS, FIRE WATER MAY BE RECIRCULATED FROM WATER STORAGE TANKS 1540-TK-012 & 1540-TK-035.

NOT FOR CONSTRUCTION

DRAWING NO.	DRAWING TITLE

REFERENCE DRAWINGS

NO.	DESCRIPTION	BY	CHK'D	APP'D	DATE

REVISIONS

REV.	ISSUE FOR	AUTH. BY		DATE
D	ISSUE FOR DESIGN	E.C.	S.S.	2012-12-14
C	ISSUE FOR DESIGN	R.A.	S.S.	2012-11-14
B	CLIENT REVIEW	R.A.	S.S.	2012-07-27
A	INTERNAL REVIEW	R.A.	S.S.	2012-07-13

ISSUE AUTHORIZATION

HATCH™

DESIGNED BY J. HEIDA DATE 2012-07-13	DRAWN BY D. BARNATT DATE 2012-07-13
CHECKED BY M. NENE DATE 2012-07-13	DISCIP. ENGR. J.HEIDA/R.ALADI DATE 2012-07-13
PROJ. DES. COORD. J. CHALMERS DATE 2012-07-13	PROJ. ENGR. S. SENNIK DATE 2012-07-13
PROJ. MGR. M. SUCHARDA DATE 2012-07-13	

PRECIOUS METALS RECOVERY LLC

PRECIOUS METALS RECOVERY LLC
DRY HILLS FACILITY PROJECT

FIRE WATER SYSTEM
PIPING AND INSTRUMENTATION DIAGRAM

SCALE NTS OR AS NOTED

DWG. NO. H340940-1500-75-031-0003

REV. D

DWG. NO. H340940-1500-75-031-0004

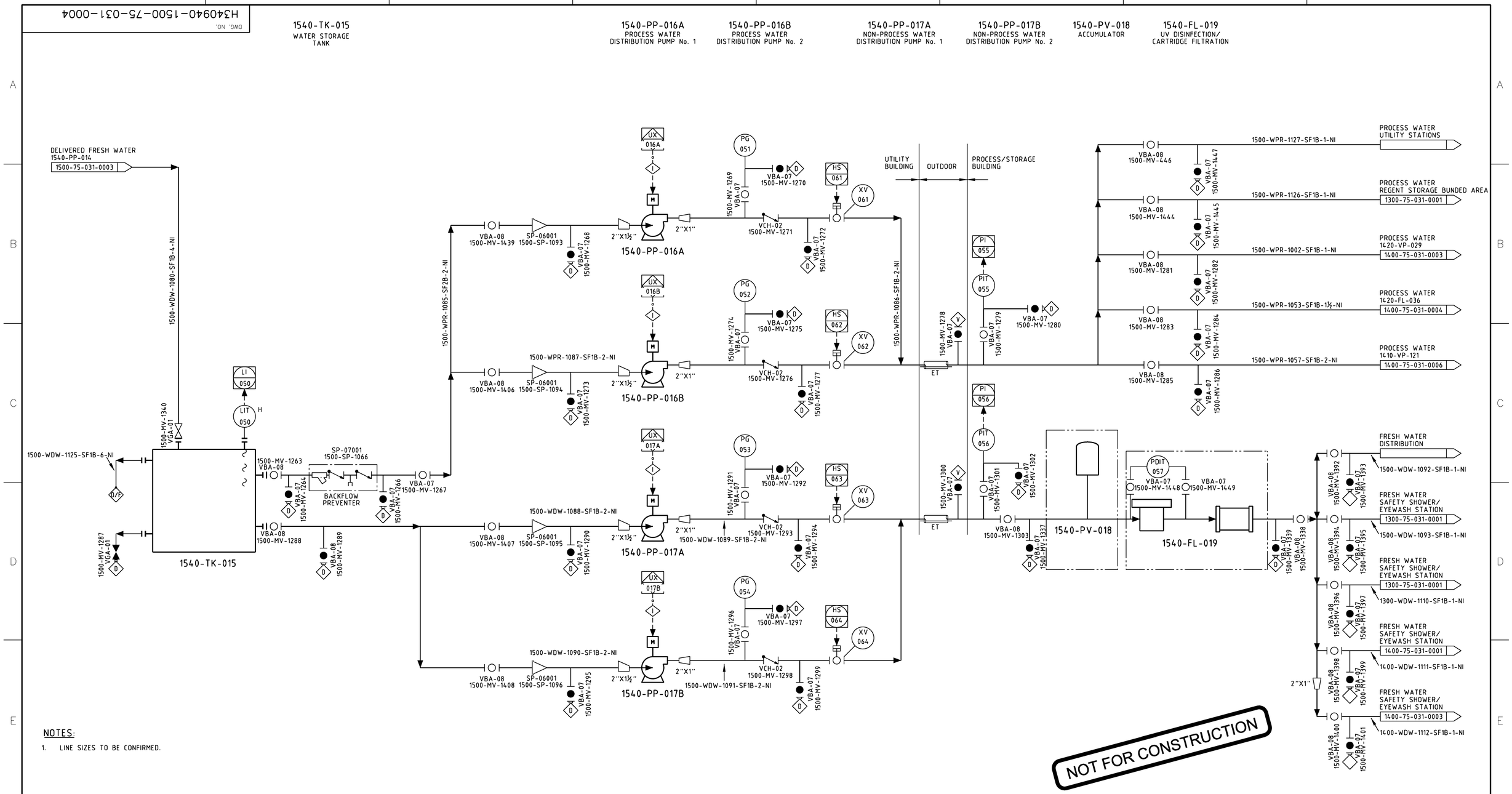

NOTES:

1. LINE SIZES TO BE CONFIRMED.

DRAWING NO.	DRAWING TITLE

REFERENCE DRAWINGS

NO.	DESCRIPTION	BY	CHK'D	APP'D	DATE

REVISIONS

REV.	ISSUE FOR	AUTH. BY		DATE
D	ISSUE FOR DESIGN	E.C.	S.S.	2012-12-14
C	ISSUE FOR DESIGN	R.A.	S.S.	2012-11-14
B	CLIENT REVIEW	R.A.	S.S.	2012-07-27
A	INTERNAL REVIEW	R.A.	S.S.	2012-07-13

ISSUE AUTHORIZATION

HATCH™

DESIGNED BY J. HEIDA DATE 2012-07-13	DRAWN BY D. BARNATT DATE 2012-07-13
CHECKED BY M. NENE DATE 2012-07-13	DISCIP. ENGR. J.HEIDA/R.ALADI DATE 2012-07-13
PROJ. DES. COORD. J. CHALMERS DATE 2012-07-13	PROJ. ENGR. S. SENNIK DATE 2012-07-13
PROJ. MGR. M. SUCHARDA DATE 2012-07-13	

PRECIOUS METALS RECOVERY LLC

PRECIOUS METALS RECOVERY LLC
DRY HILLS FACILITY PROJECT

DOMESTIC / PROCESS WATER SUPPLY
PIPING AND INSTRUMENTATION DIAGRAM

SCALE NTS OR AS NOTED

DWG. NO. H340940-1500-75-031-0004

REV. D

DWG. NO. H340940-1500-75-031-0005

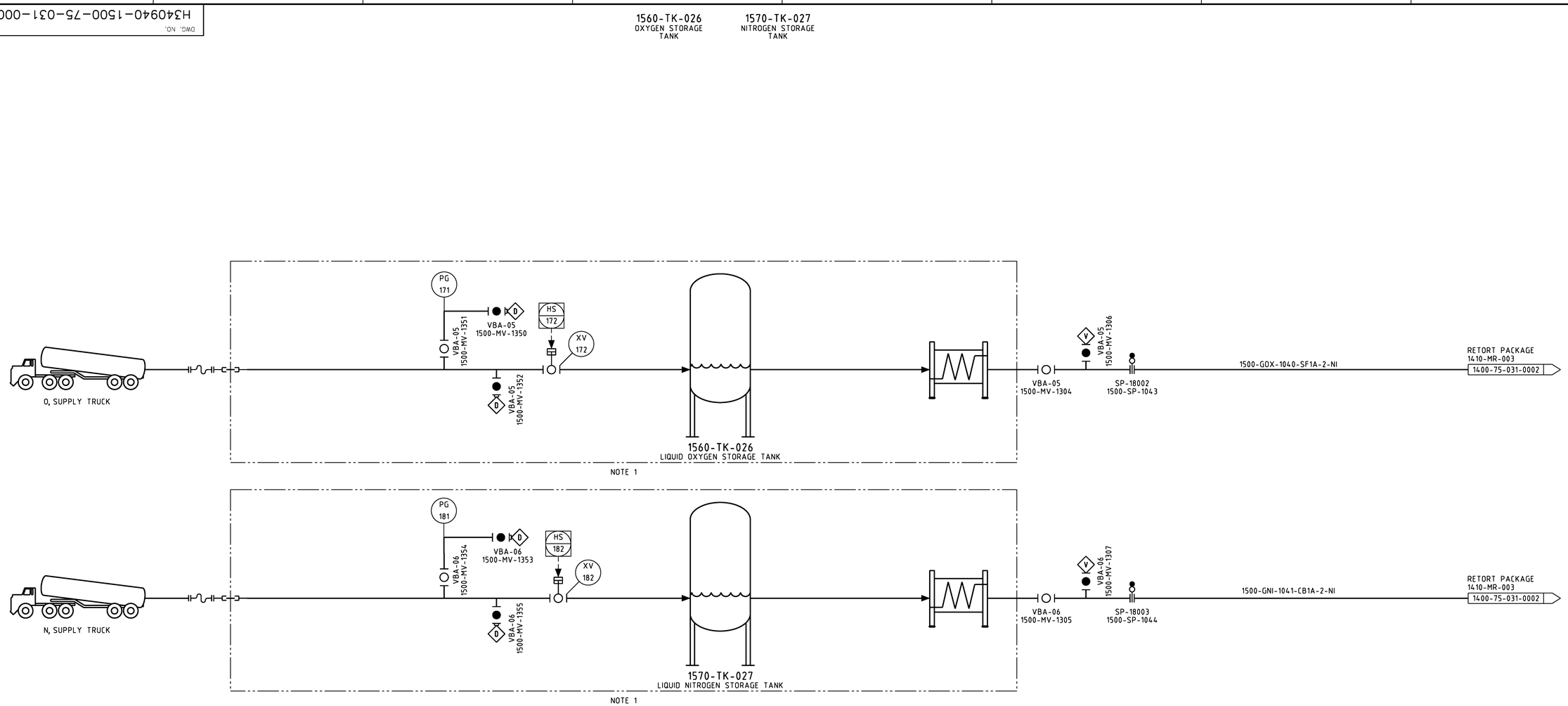

NOTES:

1. SUPPLIED AND OWNED BY NITROGEN/OXYGEN SUPPLIER.
2. VENTS AND DRAINS TO BE DIRECTED TO A SAFE LOCATION.
3. LINE SIZES TO BE CONFIRMED.

NOT FOR CONSTRUCTION

DRAWING NO.	DRAWING TITLE

REFERENCE DRAWINGS

NO.	DESCRIPTION	BY	CHK'D	APP'D	DATE

REVISIONS

REV.	ISSUE FOR	AUTH. BY		DATE
D	ISSUE FOR DESIGN	E.C.	S.S.	2012-12-14
C	ISSUE FOR DESIGN	R.A.	S.S.	2012-11-14
B	CLIENT REVIEW	R.A.	S.S.	2012-07-27
A	INTERNAL REVIEW	R.A.	S.S.	2012-07-13

ISSUE AUTHORIZATION

HATCH™

DESIGNED BY J. HEIDA DATE 2012-07-13	DRAWN BY D. BARNATT DATE 2012-07-13
CHECKED BY M. NENE DATE 2012-07-13	DISCIP. ENGR. J.HEIDA/R.ALADI DATE 2012-07-13
PROJ. DES. COORD. J. CHALMERS DATE 2012-07-13	PROJ. ENGR. S. SENNIK DATE 2012-07-13
PROJ. MGR. M. SUCHARDA DATE 2012-07-13	

PRECIOUS METALS RECOVERY LLC

PRECIOUS METALS RECOVERY LLC
DRY HILLS FACILITY PROJECT

GAS SYSTEMS
PIPING AND INSTRUMENTATION DIAGRAM

SCALE NTS OR AS NOTED

DWG. NO. H340940-1500-75-031-0005

REV. D

DWG. NO. H340940-1600-75-031-0006

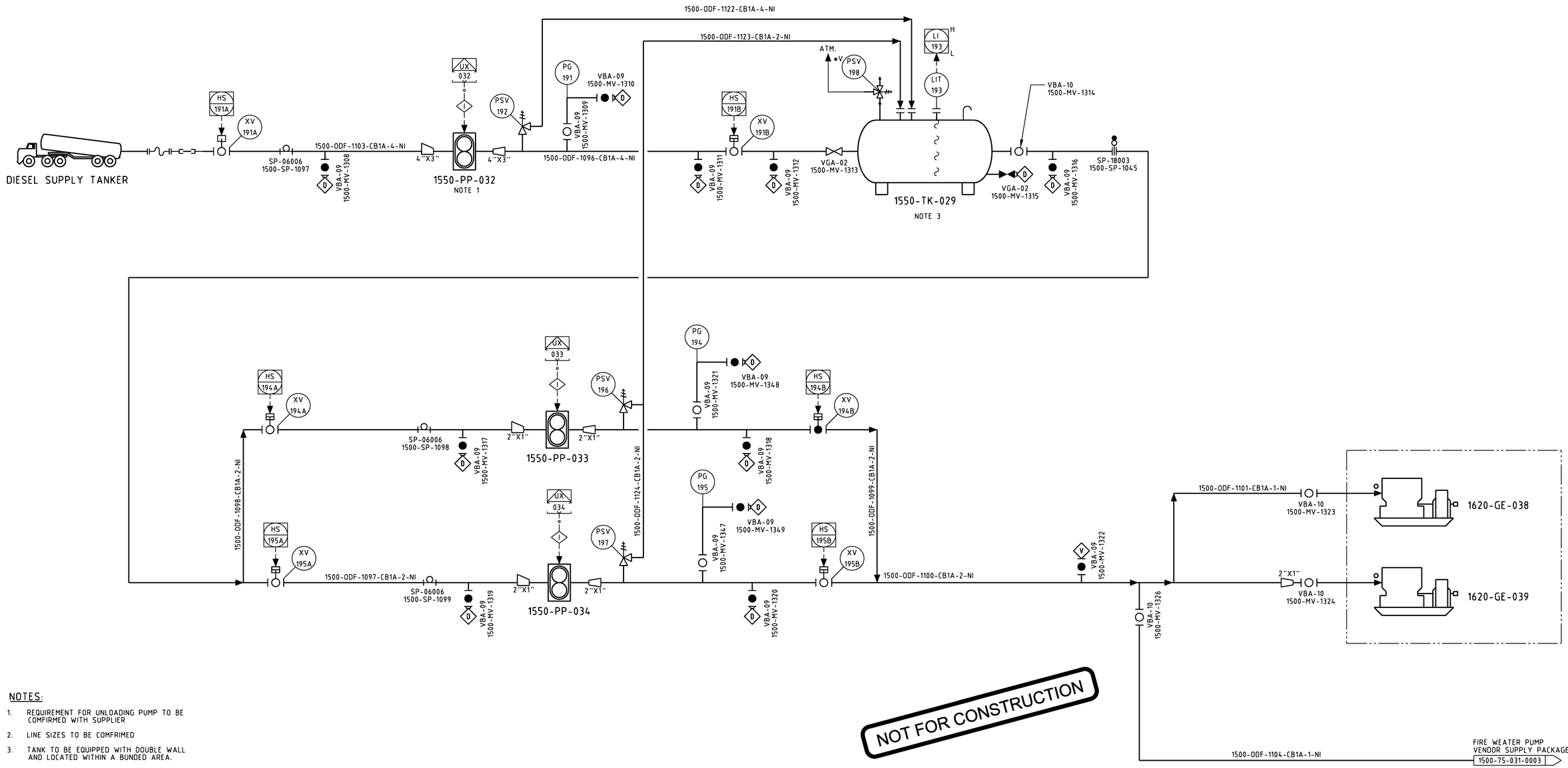

NOTES:

1. REQUIREMENT FOR UNLOADING PUMP TO BE COMFIRMED WITH SUPPLIER
2. LINE SIZES TO BE COMFRIMED
3. TANK TO BE EQUIPPED WITH DOUBLE WALL AND LOCATED WITHIN A BUNDED AREA.

NOT FOR CONSTRUCTION

DRAWING NO.	DRAWING TITLE

REFERENCE DRAWINGS

NO.	DESCRIPTION	BY	CHK'D	APP'D	DATE

REVISIONS

REV.	ISSUE FOR	AUTH. BY		DATE
D	ISSUE FOR DESIGN	E.C.	S.S.	2012-12-14
C	ISSUE FOR DESIGN	R.A.	S.S.	2012-11-14
B	CLIENT REVIEW	R.A.	S.S.	2012-07-27
A	INTERNAL REVIEW	R.A.	S.S.	2012-07-13

ISSUE AUTHORIZATION

HATCH™

DESIGNED BY J. HEIDA DATE 2012-07-13	DRAWN BY D. BARNATT DATE 2012-07-13
CHECKED BY M. NENE DATE 2012-07-13	DISCIP. ENGR. J. HEIDA/R. ALADI DATE 2012-07-13
PROJ. DES. COORD. J. CHALMERS DATE 2012-07-13	PROJ. ENGR. S. SENNIK DATE 2012-07-13
PROJ. MGR. M. SUCHARDA DATE 2012-07-13	

PRECIOUS METALS RECOVERY LLC

PRECIOUS METALS RECOVERY LLC
DRY HILLS FACILITY PROJECT

DIESEL SYSTEMS
PIPING AND INSTRUMENTATION DIAGRAM

SCALE NTS OR AS NOTED

DWG. NO. H340940-1500-75-031-0006

REV. D