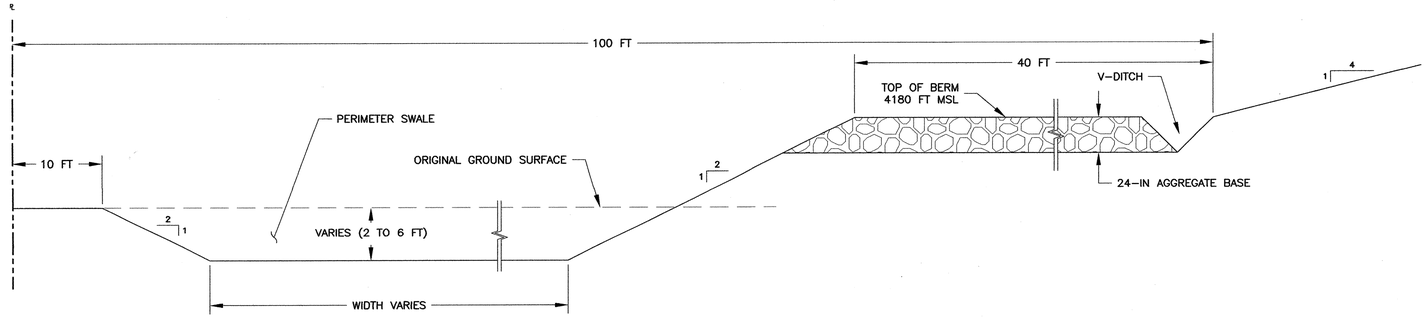

8 / 5 8 PERIMETER BERM DETAIL

SCALE 4 0 4 FEET

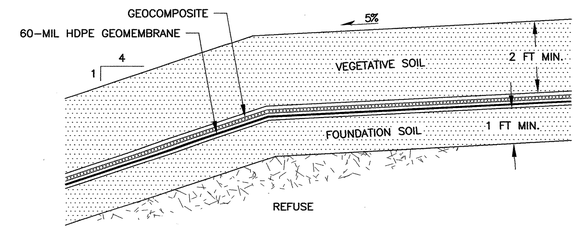

9 / 5 8 COVER SYSTEM DETAIL

SCALE 2 0 2 FEET

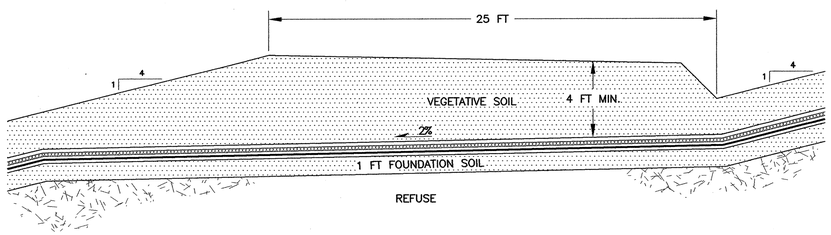

10 / 7 8 FINAL COVER SLOPE BENCH

SCALE 4 0 4 FEET

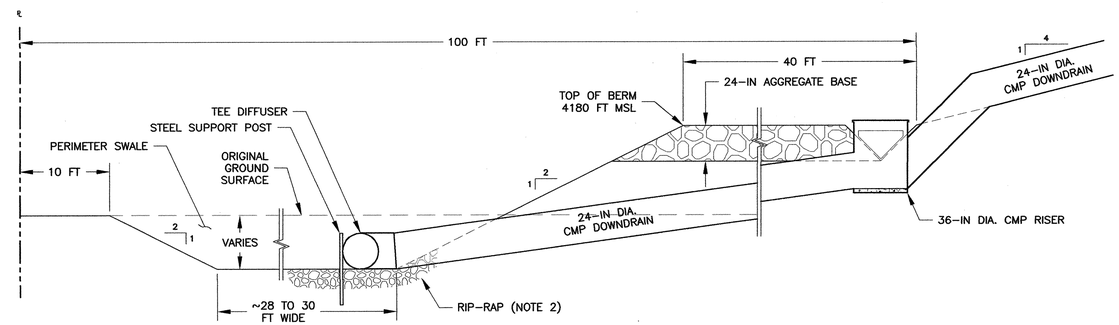

11 / 5 8 CMP DOWNDRAIN DISCHARGE DETAIL

SCALE 4 0 4 FEET

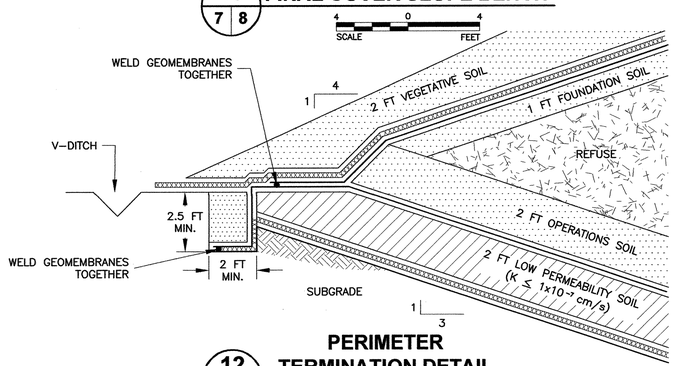

12 / 5 8 PERIMETER TERMINATION DETAIL

SCALE 3 0 3 FEET

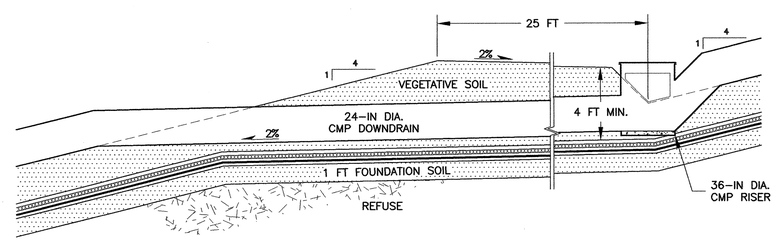

13 / 5 8 CMP DOWNDRAIN BENCH DETAIL

SCALE 4 0 4 FEET

LEGEND

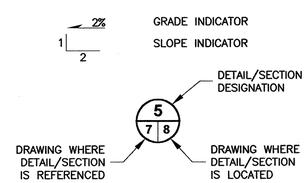

NOTE

1. GEOSYNTHETICS NOT TO SCALE FOR CLARITY.
2. EXTEND RIP-RAP 15 FT LATERALLY FROM TEE DIFFUSER.

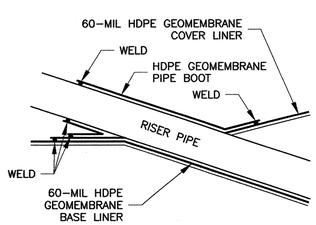

14 / 4 8 TYPICAL PIPE BOOT

SCALE 2 0 2 FEET

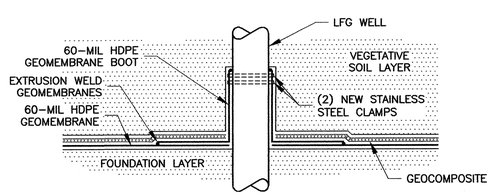

15 / 6 8 GAS COLLECTION WELL PIPE BOOT DETAIL

(NOT TO SCALE)

REV	DATE	DES	REVISION DESCRIPTION	CADD	CHK	RVW
C	04/12/10	KGH	ADD SECONDARY LCRS/LINER	RJS	KGH	REK
B	05/29/09	KDH	ADD PIPE BOOT DETAILS	RJS	KGH	REK
A	03/11/08	KDH	ISSUED FOR PERMITTING	RJS	KGH	REK

PROJECT

JUNGO ROAD LANDFILL
WINNEMUCCA, HUMBOLDT COUNTY, NEVADA

REGISTERED PROFESSIONAL ENGINEER - STATE OF NEVADA
4-13-10
RICHARD E. KIEL
CIVIL
No. 08011

TITLE

FINAL COVER DETAILS

Golder Associates
Sacramento, CA

PROJECT No. 063-7079-100			FILE No. Dwg 08 – Final Cover Detail – Ver 2	
DESIGN	KGH	10/01/07	SCALE AS SHOWN	REV. C
CADD	JDR	03/05/08	8	
CHECK	KGH	03/06/08		
REVIEW	REK	03/08/08		