PSC-Fernley Hazardous Waste Treatment and Storage Facility

RCRA Part B Permit Renewal Application

Submitted to Nevada Division of Environmental Protection

(Appendix D-6 Tank Certifications)

21st Century Environmental Management of Nevada, LLC (PSC)
2095 Newlands Drive East
Fernley, NV 89408

Volume III

July 2012

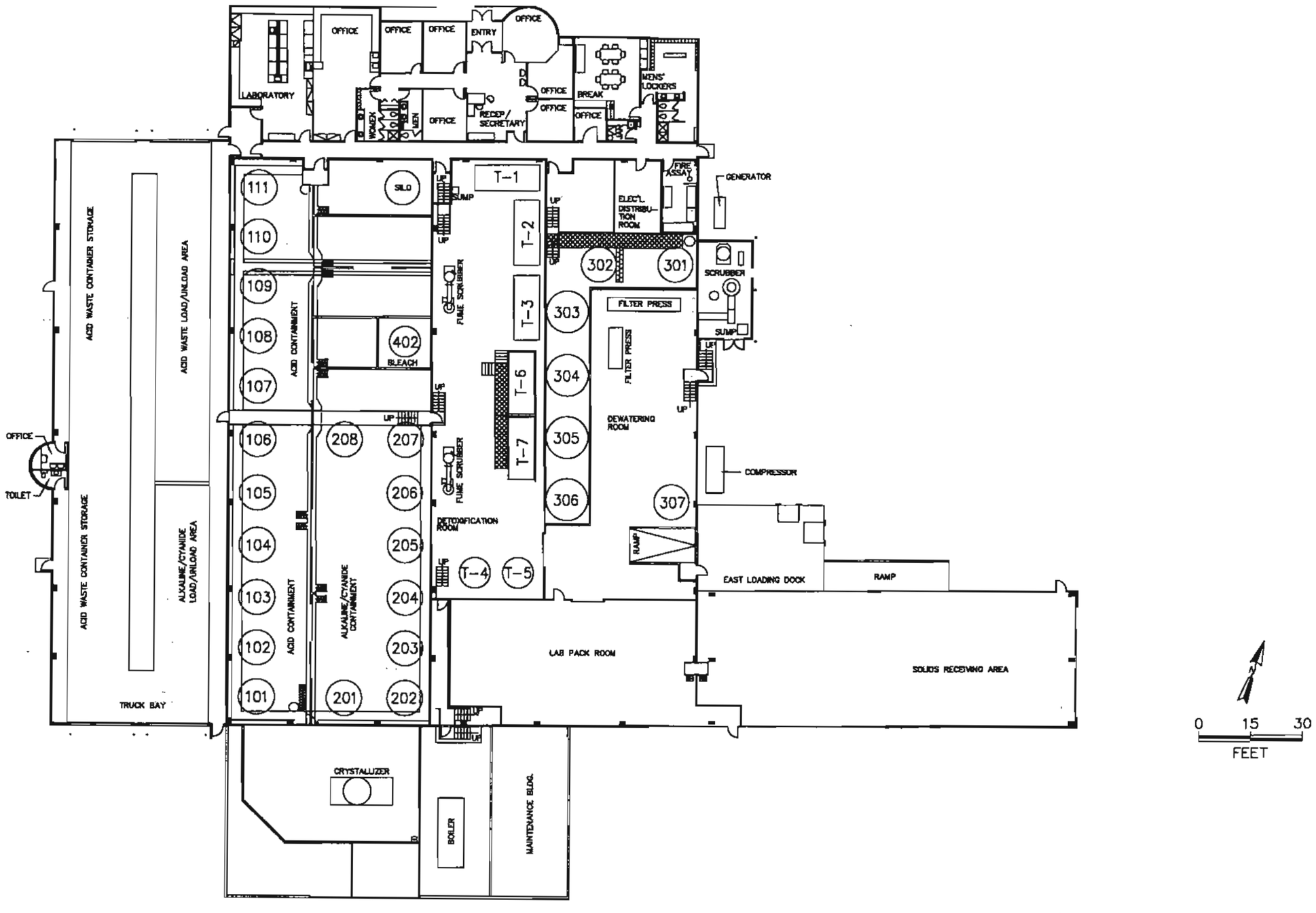

PSC

TITLE:
Tank Location Plan
PSC Fernley Facility
Fernley, Nevada

DWN: dtb	DES.:	PROJECT NO.:	
CHKD:	APPD:	FIGURE NO.: D2-1	
DATE: 7/10/12	REV.: 2		

ACID STORAGE TANKS

TANK DATA SHEET

RCRA-Regulated? **YES**

Tank Location: **Tank Storage Bay - Acid Area**

Tank Name: **Waste Acid Storage**

Tank Numbers: **#101 - #111**

Process Description: **Acid Storage**

Vessel Fluid: **Waste Acid Mixtures**

Specific Gravity: **≤ 1.90**

Freeboard At Working Vol (ft): **6" + dome top**

Normal Operating Pressure (psig): **Atmospheric**

Temperature (°F): **Ambient**

	Material	Thickness	Type
Bottom	**Cross-link Polyethylene**	**5/8" nominal**	**Flat, Sloped**
Shell	**Cross-link Polyethylene**	**Varies .40" - .90" top to bottom**	**Cylindrical**
Top	**Cross-link Polyethylene**	**Design Avg. .40"**	**Domed Roof**

Working Volume (USG): **6000**

Insulation: **None**

Nominal Volume (USG): **6280**

Method of Construction: **Rotationally Molded**

Tank O.D. (ft): **10' - 0"**

Tank Height or Length (ft): **12' – 6 1/2"**

Design Code Used: **ASTM D1998**

Date in Service: **2009**

Anchorage: **Seismic restraints bolted to concrete. Anchorage designs per 2006 IBC.**

Connections

Item No.	Size (In.)	Gasket	Description
1	**24"**		**Roof manway / E-vent**
2	**4"**		**Vent fitting to Scrubber**
3	**3"**		**Tank Fill fitting**
4	**2"**		**Level Sensor Connection**
5	**4"**		**Flange Drain fitting**
6			**Lifting Lugs**
7			
8			
9			
10			
11			
12			
13			
14			
15			

Tank Mfgr: **Poly Processing Co.**

Remarks: **Poly Processing stock #1206250. Tank manufactured of hi-density cross-linked rotationally molded polyethylene with "Extra heavy wall thickness" for 1.9 sp. gr. service. Tank includes OR-1000 oxidation resistant liner.**

Tank Sketch

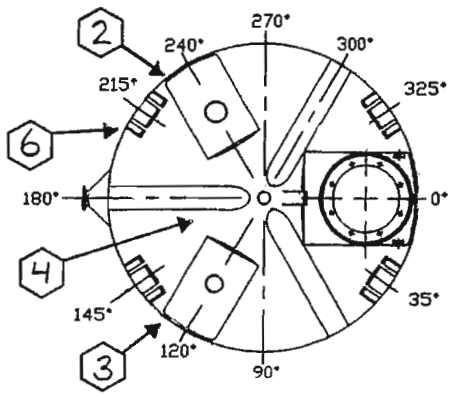

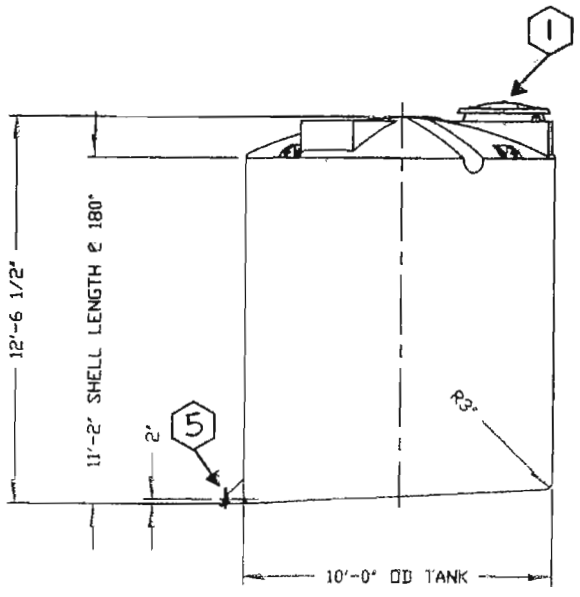

SCHIFF ASSOCIATES

gbell@schiffassociates.com

www.schiffassociates.com
Consulting Corrosion Engineers – Since 1959

October 5, 2009 via email to: Burgess, Aubry [ABurgess@pscnow.com]

PSC ENVIRONMENTAL SERVICES
2095 Newlands Drive E
Fernley, NV 89408

Attention: Mr. Aubry Burgess
Maintenance Supervisor

Re: Material Compatibility/Corrosion Certification Letter for
Tank 101 for Acid Storage
Amended Tank Replacement Plan
Fernley, NV
SA#08-1383LGL

Dear Mr. Burgess:

We have conducted the following investigations and research relative to the suitability and compatibility of the 6,250 Gallon slope bottom High Density Polyethylene (HDPE) tanks fabricated by PolyProcessing with OR-1000™ lining system for pre-treatment acid storage for typical inlet temperatures of less than 100°F and up to 140°F depending on concentrations and specific design conditions. Per the attached information, "*The maximum temperature rating for crosslinked polyethylene material is 150° F. Above that temperature the thermal stabilizers in the plastic are more rapidly consumed. Continued use will cause embrittlement and a reduction in the useful life of the part. Temperature services from 100° F to 150° F are acceptable applications, however, thicker tank walls are required to maintain a safe design.*"

1) Reviewed PolyProcessing Company's product information provided on tank design and compatibility.

2) Conducted independent research on compatibility of HDPE and polyethylenes with acids as a function of temperature.

3) Visited the PSC facility in Fernley in December 2008 to understand the anticipated process flow and conditions of waste streams at the site.

4) Reviewed supplemental information requested from PolyProcessing Company regarding issues identified during site visit.

1489 W. Warm Springs Road #110 · Henderson, NV 89014
Phone: 702.966.8266 · Fax: 702.946.6767

ADDITION DATE 10/09/09
REVISION NUMBER 1

The tank design is suitable for acid storage per the manufacturer's information in the position as Tank 101 in the waste processing stream of the PSC Facility as configured and intended per the Amended Tank Replacement Program outlined in the letter from Thomas Nelson of PSC to Nevada Division of Environmental Protection dated March 25, 2008.

CERTIFICATION

I certify under penalty of law that this document and all attachments were prepared under my direction or supervision according to a system designed to assure that qualified personnel properly gather and evaluate the information submitted. Based on my inquiry of the person or persons who manage the system, or those persons directly for gathering the information, the information submitted is, to the best of my knowledge and belief, true, accurate, and complete. I am aware that there are significant penalties for submitting false information, including the possibility of fine and imprisonment for knowing violations.

CLOSURE

Our services have been performed with the usual thoroughness and competence of the engineering profession. No other warranty or representation, either expressed or implied, is included or intended.

Sincerely,
SCHIFF ASSOCIATES

GRAHAM E.C. BELL
EXP: 12-31-10
MECHANICAL

Graham E.C. Bell, PE
Principal Engineer
NACE International Corrosion Specialist #5350

Attachments: Proposed Storage Tank Drawing
Waste Information Provided by PSC on PolyProcessing Data Sheet
PolyProcessing Technical Bulletin, Chemical Resistance Technical Information
OR-1000 Tank Cut Sheet
OR-1000 Cut Sheet
OR-1000 Product Sheet
PolyProcessing Polyethylene Tank Life Expectancy
PolyProcessing Chemical Compatibility Data including Temperature Dependence
PolyProcessing Technical Bulletin, Crosslinked Polyethylene with OR-1000™ System, Dated June 2005, Rev. A

ADDITION DATE 10/09/09

REVISION NUMBER 1

Table I

The following chemicals do not attack or permeate high density crosslinkable polyethylene resins up to 100° F. Each application should be considered individually. All concentrations apply except where noted.

Acetic Acid
Aluminum Salts
Alum
Ammonium Hydroxide
Ammonium Salts
Amyl Alcohol
Antimony Salts
Arsenic Acid
Barium Hydroxide
Benzene Sulfonic Acid
Bismuth Salts
Boric Acid
Bromic Acid
Butanediol
Butyl Alcohol
Calcium Hydroxide
Calcium Salts
Chromic Acid<50%
Citric Acid
Copper Salts
Detergents
Diazo Salts
Diethyl Carbonate
Diethanol Amine
Diethylene Glycol
Diglycolic Acid
Dimethylamine
Dimethyl Formamide
Ethyl Alcohol
Ethylene Glycol
Ferric Salts
Ferrous Salts
Fluoboric Acid
Fluosilicic Acid
Formic Acid
Gallic Acid
Gluconic Acid
Hexanol
Hydrazone<35%
Hydrazine Hydrochloride
Hydriodic Acid
Hydrobromic Acid
Hydrochloric Acid
Hydrofluoric Acid
Hydrofluorosilicic Acid
Hydrogen Peroxide<82%
Hydrogen Phosphide
Hydroquinone
Hypochorous Acid
Iodine Solutions
Lactic Acid
Latex
Lead Acetate
Magnesium Salts
Mercuric Salts
Mercurous Salts
Mercury
Methyl Alcohol
Methylsulfuric Acid
Michel Salts
Nicotinic Acid
Nitric Acid<50%
Oxalic Acid
Perchloric Acid
Phenol<10%
Potassium Hydroxide
Potassium Salts
Phosphoric Acid
Photographic Solutions
Propyl Alcohol
Propylene Glycol
Sea Water
Selenic Acid
Sewage
Silicic Acid
Silver Salts
Soap Solutions
Sodium Ferricyanide
Sodium Ferrocyanide
Sodium Hydroxide
Sodium Hypochlorite<9%
Sodium Salts
Sodium Sulfonates
Stannic Salts
Stannous Salts
Starch Solutions
Stearic Acid
Sulfuric Acid <80%
Sulfurous Acid
Sugar Solution
Glucose
Lactose
Sucrose etc.
Tannic Acid
Tanning Extracts
Tartaric Acid
Titinium Acid
Toluene Sulfonic Acid
Triethanolamine
Urea
Vinegar
Wetting Agents
Zinc Salts

*Concentrations above these limits may result in certain applications. Please contact factory for specific conditions.

Table II

The following oils and organic chemicals do not attack HDXLPE resins. They will be absorbed into the wall of the tank; however, there should be no loss of chemical. Because of this absorption, no chemical other than the original should be stored in the tank as long as contamination may result as the absorbed oil is leached out. Storage at temperatures up to 100° F are possible provided the effects of the absorption on the properties of the tank are not prohibitive.

Fatty Acids	Mineral Oils	Animal Fats	Vegetable Oil
Butyric	Lube	Lard	Corn
Lauric	Transformer	Fish Oil	Coconut
Linoleic	Hydraulic	Musk Oil	Cottonseed
Oleic		Whale Oil	Olive
Palmitic			Peanut
Stearic			

Table III

The following organic chemicals do not attack high density crosslinkable polyethylene resins. They will be absorbed into the wall of tank and a permeation loss will occur. Because of this permeation and the effect it has on the physical properties of the tank, it is generally not recommended that these chemicals be storage at room temperatures above 100° F. However, their use largely depends on such factors as size of tank, its location, toxicity of the chemical and applicable codes such as NFPA, OSHA, etc.

Aniline
Benzene
Carbon Tetrachloride
Chlorobenzene
Cyclohexanol
Cyclohexanone
Dibutylphthalate
Diesel Fuel
Dimethylamine
Ethyl Butyrate
Ethylene Chlorohydin
Fuel Oil
Furfural
Aliphatic Hydrocarbons (hexane, octane, hexene, octene etc.)
Jet Fuel
Gasoline
Nitrobenzene
Octyl Cresol
Propylene Dichloride
Toluene
Xylene

POLYPROCESSING COMPANY

Providing Solutions Through Innovation

Chemical Resistance

Chemical Resistance

Chemical "resistance" and "compatibility" are synonymous terms used in relation to the ability of a plastic to function in different environments. In regards to polyethylene chemical storage tanks, chemical resistance encompasses the total effect a product would have on a tank. The factors that make up the overall compatibility of a chemical to a rotomolded tank are (1) chemical attack, (2) absorption or permeation, and (3) solubility and stress crack resistance.

Chemical Attack

By definition, chemical attack involves an actual chemical reaction with the plastic. This can be a breaking of molecular chains and/or an addition of chemical groups to the molecule. For example, in the case of an oxidation reaction with polyethylene, both occur with the addition of carbonyl groups. This causes and eventual loss of properties to the point that a tank would not be serviceable.

Polyethylene in general is one of the most inert plastics available. Very few chemicals react with polyethylene and with those that do, the rate is relatively slow. The ultra high molecular weight characteristics of high density crosslinked polyethylene resins after crosslinking makes these particular polyethylenes even more resistant than other grades.

Permeation

This involves the physical absorption of the chemical into the polyethylene. If this is a volatile chemical, then an actual loss of the product can occur as the chemical vaporizes from the outer wall of the tank. The amount of absorption is generally limited to 3 to 7 percent by weight of the polyethylene. Also, the loss of volatile products is relatively small. For example, a 25-gallon tank with a 50-mil wall will only lose between 5 and 6 grams of gasoline per day due to permeation. The thicker the wall, the lower the rate of loss.

The absorption of a product into the wall of a tank will cause more property changes. The tensile strength is reduced approximately 15 to 20 percent and stiffness approximately 20 percent. Normally, this does not affect the utility of a tank or prohibit the application. The property losses due to permeation are offset by increasing the design wall thickness of the tank.

Elevated Temperature

The effects of elevated temperature (100° F or greater) on polyethylene tank are predictable and expected. Polyethylene, which is a flexible material, becomes even more flexible when heated. It will, therefore, bulge more at an elevated temperature than at room temperature.

By looking at the design hoop stress values for various temperatures, one can see the effects of increased temperature services. The values remain relatively constant up to 100° F, after which they begin to decrease.

100° F	600 psi	130° F	450 psi
110° F	550 psi	140° F	400 psi
120° F	500 psi	150° F	300 psi

A rise in temperature of 50° F (100° F to 150° F) reduces the design hoop stress value from 600 psi to 300 psi and doubles the required wall thickness. It follows that simply increasing the service rating of a tank from 1.35 S.G. to 1.65 S.G., or even to 1.90 S.G. is not necessarily sufficient. The proper wall thickness must be calculated for the temperature of service.

The maximum temperature rating for crosslinked polyethylene material is 150° F. Above that temperature the thermal stabilizers in the plastic are more rapidly consumed. Continued use will cause embrittlement and a reduction in the useful life of the part. Temperature services from 100° F to 150° F are acceptable applications, however, thicker tank walls are required to maintain a safe design. Consult the factory when application such as these arise.

Table I

The following chemicals do not attach or permeate high density crosslinkable polyethylene resins up to 100° F. Each application should be considered individually. All concentrations apply except where noted.

Acetic Acid
Aluminum Salts
Alum
Ammonium Hydroxide
Ammonium Salts
Amyl Alcohol
Antimony Salts
Arsenic Acid
Barium Hydroxide
Benzene Sulfonic Acid
Bismuth Salts
Boric Acid
Bromic Acid
Butanediol
Butyl Alcohol
Calcium Hydroxide
Calcium Salts
Chromic Acid<50%
Citric Acid
Copper Salts
Detergents
Diazo Salts
Diethyl Carbonate
Diethanol Amine
Diethylene Glycol
Diglycolic Acid
Dimethylamine
Dimethyl Formamide
Ethyl Alcohol
Ethylene Glycol
Ferric Salts
Ferrous Salts
Fluoboric Acid
Fluosilicic Acid
Formic Acid
Gallic Acid
Gluconic Acid
Hexanol
Hydrazone<35%
Hydrozine Hydrochloride
Hydriodic Acid
Hydrobromic Acid
Hydrochloric Acid
Hydrofluoric Acid
Hydrofluorosilicic Acid
Hydrogen Peroxide<52%
Hydrogen Phosphide
Hydroquinone
Hypochorous Acid
Iodine Solutions
Lactic Acid
Latex
Lead Acetate
Magnesium Salts
Mercuric Salts
Mercurous Salts
Mercury
Methyl Alcohol
Methylsulfuric Acid
Michel Salts
Nicotinic Acid
Nitric Acid<50%
Oxalic Acid
Perchloric Acid
Phenol<10%
Potassium Hydroxide
Potassium Salts
Phosphoric Acid
Photographic Solutions
Propyl Alcohol
Propylene Glycol
Sea Water
Selenic Acid
Sewage
Silicic Acid
Silver Salts
Soap Solutions
Sodium Ferricyanide
Sodium Ferrocyanide
Sodium Hydroxide
[1]Sodium Hypochlorite<9%
Sodium Salts
Sodium Sulfonates
Stanic Salts
Stannous Salts
Starch Solutions
Stearic Acid
[1]Sulfuric Acid <80%
Sulfurous Acid
Sugar Solution
Glucose
Lactose
Sucrose, etc.
Tannic Acid
Tanning Extracts
Tartaric Acid
Titinium Acid
Toluene Sulfonic Acid
Triethanolamine
Urea
Vinegar
Wetting Agents
Zinc Salts

[1] Concentrations above stated percentage require special considerations, contact factory for guidelines concerning these applications.

Table II

The following oils and organic chemicals do not attack HDXLPE resins. They will be absorbed into the wall of the tank; however, there should be no loss of chemical. Because of this absorption, no chemical other than the original should be stored in the tank as long as contamination may result as the absorbed oil is leached out. Storage at temperatures up to 100° F are possible provided the effects of the absorption on the properties of the tank are not prohibitive.

Fatty Acids	**Mineral Oils**	**Animal Fats**	**Vegetable Oil**
Butyric	Lube	Lard	Corn
Lauric	Transformer	Fish Oil	Coconut
Linoleic	Hydraulic	Musk Oil	Cottonseed
Oleic		Whale Oil	Olive
Palmitic			Peanut
Stearic			

Table III

The following organic chemicals do not attack high density crosslinkable polyethylene resins. They will be absorbed into the wall of tank and a permeation loss will occur. Because of this permeation and the effect it has on the physical properties of the tank, it is generally not recommended that these chemicals be storage at room temperatures above 100° F. However, their use largely depends on such factors as size of tank, its location, toxicity of the chemical, and applicable codes such as NFPA, OSHA, etc.

Anitine
Benzene
Carbon Tetrachloride
Chlorabenzene
Cychohexanol
Cycolohexnone
Dibutylphthalate
Diesel Fuel
Dimethylamine
Ethyl Butyrate
Ethylene Chlorohydin
Fuel Oil
Fufural
Aliphatic Hydrocarbons (hexane, octane, hexene, octene, etc.)
Jet Fuel
Gasoline
Nitrobenzene
Octyl Cresol
Propylene Dichloride
Toluene
Xylene

This document reports accurate and reliable information to the best of our knowledge but our suggestions and recommendations cannot be guaranteed because the conditions of use are beyond our control. Information presented herein is given without reference to any patent questions which may be encountered in use thereof. Such questions should be investigated by those using this information. Poly Processing Company assumes no responsibility for the use of information presented herein and hereby disclaims all liability in regard to such use.

OR-1000™ Tank Systems!

Specify Peace of Mind!

NSF/ANSI 61

- OR-1000™ Engineered System
- 4 Times Antioxidants
- Certified for 31+ Hazardous and Corrosive Chemical Applications
- Design Temperatures to 140°F
- Complies with State Regulations

Provide Longer Tank Life with an IMFO®/OR-1000™ System!

Increase Tank Longevity!

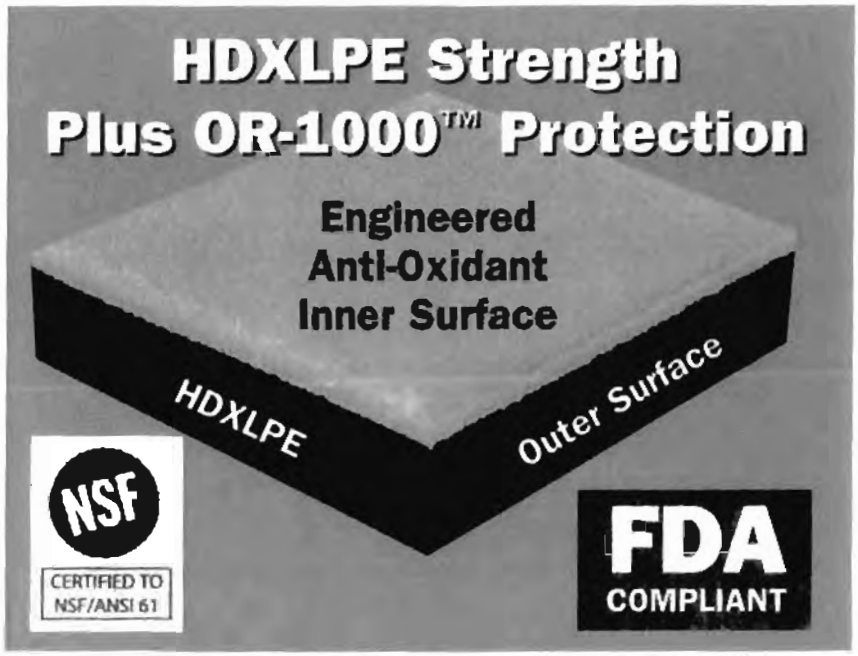

- Proven System since 1995
- Increased Chemical Resistance
- Complete Drain
- Maintenance Free
- Avoids Confined-Space Entry
- 4x Anti-Oxidant Package
- Sodium Hypochlorite/Sulfuric Acid/ Hydrochloric Acid applications*

*See warranty information on page 26

Storage Solution: OR-1000 Liner

Poly Processing Company is the only rotational molding company with the ability to provide the strength, durability and safety of HDXLPE with the added value of an oxidation resistant liner, OR-1000, integrally molded as the interior surface of the part.

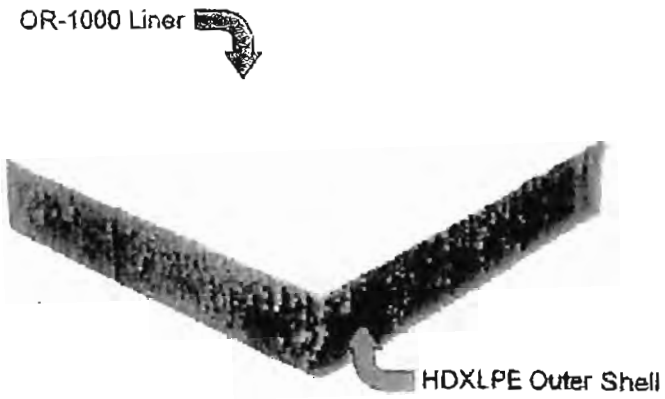

The liner thickness is in addition to the ASTM design thickness of the HDXLPE outer shell for the intended chemical application. This crosslink / OR-1000 combination has been successfully used for Sodium Hypochlorite and Sulfuric Acid services since 1995. To even further enhance the value of this combination, we are now adding this lining to the new high performance Metallocene High Density Crosslinked resin.

The reason for the OR-1000 material is simple. To develop the outstanding long-term properties of HDXLPE, the amount of anti-oxidants must be limited. Although HDXLPE has superior properties to any other rotational mold grade polyethylene, in a few highly oxidizing chemical applications, its optimum service life has not been obtained. To capitalize on the superior properties and performance characteristics of HDXLPE, the OR-1000 liner was developed to serve as an oxidation barrier to improve service life in oxidizing chemical applications. This combination provides unmatched performance and value to our customers.

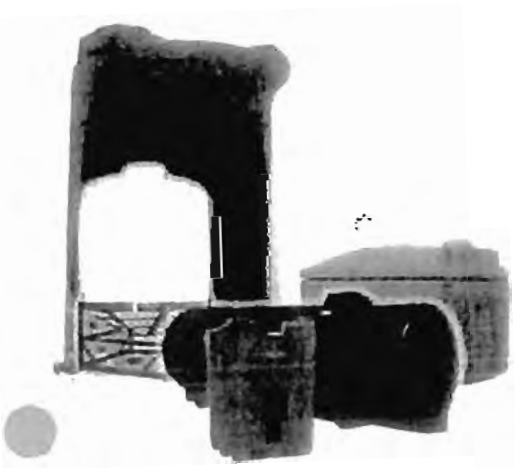

Sodium Hypochlorite and Sulfuric Acid remain very difficult storage and handling applications. However, we continue to bring you the very best in value, service and high performance products -- Poly Processing Company, *providing solutions through innovation*.

member

Authorized Distributor

member

1-866-590-6845
www.polyprocessing.com

PROCESSING

Providing Solutions Through Innovation

Polyethylene Tank Life Expectancy

For 35 years, Poly Processing Company has been **Helping Our Customers . . . Solve Problems** associated with storing hazardous chemicals, **Managing Risk** with the Environment and Employee Safety and **Growing Their Profits** with Increased Tank Longevity and Operating Efficiencies. We have specialized in providing hazardous chemical storage solutions to the industrial, water and waste water markets. While we manufacture both linear and crosslink polyethylene storage tanks; in **hazardous chemical environments, crosslink polyethylene** is the material of choice. Our customers report crosslink polyethylene tanks providing service for 10+ years with 15 to 20 years of tank service being common. However; there are many factors and variables that have an effect on the useful life of any tank including polyethylene.

Chemical, Concentration and Temperature: The chemical, concentration and operating temperature are all factors influencing the life expectancy of a polyethylene tank. For example, high concentrations of Sulfuric Acid are stress cracking agents and are more aggressive oxidizers than less concentrated chemicals such as 25% Caustic Soda. For this reason, Poly Processing offers our customers the OR-1000™ Anti-Oxidant Systems. Another example: 12% Sodium Hypochlorite will degrade from UV exposure and elevated temperatures. As it degrades, sediment builds in the bottom of the tank leading to a shorter tank life. To eliminate this sludge buildup, Poly Processing Company offers our customers the IMFO® (Integrally Molded Flanged Outlet). The IMFO® design promotes continuous "system" flushing increasing tank life and operating efficiencies. Poly Processing Company chemical storage tanks are constructed from premium materials and designed specifically for the chemical, concentration and temperature requirements.

Installation and Piping: The single biggest reason for tank life reduction is improper tank installation and "hard" piping. Polyethylene's broad spectrum of chemical resistance vs. other materials of construction is based on its ability to expand and contract. Flexible connections compensate for tank expansion and contraction promoting a longer useful life. It is important to follow Poly Processing Company's Installation Manual Instructions during the installation process.

Venting: Often overlooked, venting is a very important step that promotes tank longevity. Polyethylene tanks are rated at atmospheric pressure/vacuum. Adequate vent size is always based on flow and delivery rates so it is important to gather the following information to adequately determine the proper venting requirements:

1) Is the tank to be filled pneumatically?
2) Is the tank to be vented to atmosphere?
3) Does the length of the vent exceed 3 feet (piped to a central vent system)
4) Is a fume scrubbing system to be used?
5) Are vent screens to be used (restricts flow)?
6) Does the tank manufacturer offer a method of "emergency venting" to prevent over-pressurization?

Other Items Effecting Tank Longevity:

1) Continuous cycling (fill / discharge)
2) Excessive agitation
3) Mobile applications

For further information about your specific needs or applications, please contact Poly Processing Company at 1-866-590-6845 or visit our website at www.polyprocessinc.com.

POLYPROCESSING COMPANY

Providing Solutions Through Innovation

Chemical Resistance

Chemical Resistance

Chemical "resistance" and "compatibility" are synonymous terms used in relation to the ability of a plastic to function in different environments. In regards to polyethylene chemical storage tanks, chemical resistance encompasses the total effect a product would have on a tank. The factors that make up the overall compatibility of a chemical to a rotomolded tank are (1) chemical attack, (2) absorption or permeation, and (3) solubility and stress crack resistance.

Chemical Attack

By definition, chemical attack involves an actual chemical reaction with the plastic. This can be a breaking of molecular chains and/or an addition of chemical groups to the molecule. For example, in the case of an oxidation reaction with polyethylene, both occur with the addition of carbonyl groups. This causes and eventual loss of properties to the point that a tank would not be serviceable.

Polyethylene in general is one of the most inert plastics available. Very few chemicals react with polyethylene and with those that do, the rate is relatively slow. The ultra high molecular weight characteristics of high density crosslinked polyethylene resins after crosslinking makes these particular polyethylenes even more resistant than other grades.

Permeation

This involves the physical absorption of the chemical into the polyethylene. If this is a volatile chemical, then an actual loss of the product can occur as the chemical vaporizes from the outer wall of the tank. The amount of absorption is generally limited to 3 to 7 percent by weight of the polyethylene. Also, the loss of volatile products is relatively small. For example, a 25-gallon tank with a 50-mil wall will only lose between 5 and 6 grams of gasoline per day due to permeation. The thicker the wall, the lower the rate of loss.

The absorption of a product into the wall of a tank will cause more property changes. The tensile strength is reduced approximately 15 to 20 percent and stiffness approximately 20 percent. Normally, this does not affect the utility of a tank or prohibit the application. The property losses due to permeation are offset by increasing the design wall thickness of the tank.

Elevated Temperature

The effects of elevated temperature (100° F or greater) on polyethylene tank are predictable and expected. Polyethylene, which is a flexible material, becomes even more flexible when heated. It will, therefore, bulge more at an elevated temperature than at room temperature.

By looking at the design hoop stress values for various temperatures, one can see the effects of increased temperature services. The values remain relatively constant up to 100° F, after which they begin to decrease.

100° F	600 psi	130° F	450 psi
110° F	550 psi	140° F	400 psi
120° F	500 psi	150° F	300 psi

A rise in temperature of 50° F (100° F to 150° F) reduces the design hoop stress value from 600 psi to 300 psi and doubles the required wall thickness. It follows that simply increasing the service rating of a tank from 1.35 S.G. to 1.65 S.G., or even to 1.90 S.G. is not necessarily sufficient. The proper wall thickness must be calculated for the temperature of service.

The maximum temperature rating for crosslinked polyethylene material is 150° F Above that temperature the thermal stabilizers in the plastic are more rapidly consumed. Continued use will cause embrittlement and a reduction in the useful life of the part. Temperature services from 100° F to 150° F are acceptable applications, however, thicker tank walls are required to maintain a safe design. Consult the factory when application such as these arise.

Crosslinked Polyethylene with OR-1000™ System
The #1 System for Oxidizing Chemical Environments

Poly Processing Company and other polyethylene tank manufacturers, as well as major polyethylene resin manufacturers have published many documents over the past several years discussing the benefits of certain rotational molding resins in acidic and alkaline chemical environments. The majority of these documents support the use of crosslinked polyethylene over linear polyethylene in acidic and basic chemical environments. These articles speak to the longevity of crosslinked polyethylene rotationally molded tanks, the safety of having polymer chains that are chemically bonded, and the leveraged investment of knowing that crosslinked polyethylene chemical storage tanks have been utilized for the last 35 years.

In 2001, one of the largest resin manufacturers in North America published a fairly extensive study which showed that their linear polyethylene in a lab environment performed as well as, if not better than crosslinked polyethylene, in acidic and alkaline chemical applications. This study, coupled with marketing efforts by linear polyethylene tank manufacturers who do not rotationally mold crosslinked polyethylene tanks in the course of their normal business, has given rise to some industry confusion and misunderstanding about what is the best resin system for storing oxidizing chemicals. We will summarize the facts about rotationally molded polyethylene storage tanks and the value of an engineered antioxidant resin system coupled with the long-term performance of crosslinked polyethylene.

We would first like to discuss the lab study performed by the linear resin manufacturer. The study compared crosslinked polyethylene with linear polyethylene in sulphuric acid and sodium hypochlorite environments. The sulphuric acid was concentrated approximately 93%-97%, and the Sodium Hypochlorite was around 14% concentration. The lab study describes how the crosslinked polyethylene and linear polyethylene were submersed in the chemicals and then tested using ARM Impact testing as well as Environmental Stress Crack Resistivity (ESCR) testing. The study concluded that the linear materials in a chemical resistivity mode held up as well as crosslinked materials in a lab environment. In addition, Higher ESCR properties are found in lower density materials like LLDPE or LDPE as compared to HDPE resins. It doesn't mean you want to use a tank made only from the lower density resins. ESCR shows how well the material performs in a pre-notched condition in the presence of certain chemicals.

The lab study performed by the resin manufacturer did not cover or discuss the long-term properties of these materials in harsh, environmental conditions. Over time, sodium hypochlorite and sulphuric acid create an oxidative environment, which remove hydrogen molecules from the polymer chains creating embrittlement. This phenomenon is inherent to all types of polyethylene, since they are hydrocarbon based molecules. Storing acids and bases in actual everyday environments presents a completely different set of parameters and stresses that have little to do with the lab environment.

Poly Processing Company has been aware of this relationship between ESCR and Chemical resistance for many years and has been an industry leader in creating engineered resin systems which give the end user the ability to have excellent oxidation and chemical resistivity without sacrificing long term performance and toughness. These engineered resin systems deliver peace of mind, a margin of safety, and leveraged investment to the end user.

Another critical factor to consider when storing acids and bases in actual everyday environments is the Long Term Hydrostatic Strength (LTHS) of the polyethylene. LTHS properties are one of the keys to providing the continued strength necessary for tanks during its service life. This property is especially important in field applications where tanks can see elevated temperatures approaching

140°F. LTHS tests are conducted at both ambient temperature (73°F) and at elevated temperature (140°F) since actual field conditions are typically in this range.
Figure 1.

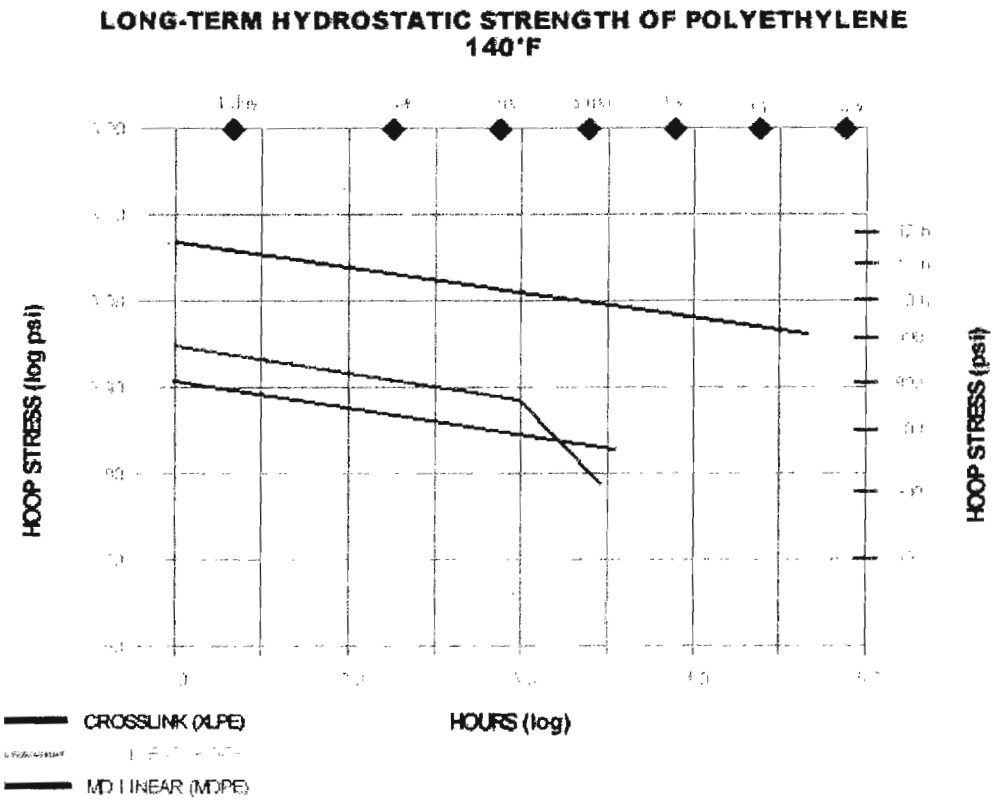

Source: Chevron Phillips Company, Plastics Technical Center

The rapid deterioration in properties is indicated by a "knee" in the curve of hoop strength versus time as illustrated in Figure 1 above. Even high performance HDPE will develop a LTHS knee at around 1000 hours (log 3), and some MDPE products will have a knee in less than 10,000 hours (log 5). This type of performance substantially reduces the expected long-term performance at elevated temperatures. Crosslinked polyethylene has been tested to 50,000 hours at 140°F and shows no signs of a knee.

There is still the need to surround the oxidation resistant material with a robust resin system that will give you longer useful tank life, superior impact resistance, and greater tensile strength for a safer product. That is why crosslinked polyethylene is still the material of choice for industrial and municipal chemical applications.

Poly Processing Company has been the leader in rotationally molded crosslinked polyethylene storage tanks for 35 years. We work with the leading universities in the country to develop engineered resin systems that will perform above and beyond any standard "off the shelf" polyethylene in harsh, oxidizing environments. One of the systems we developed is the OR-1000™ system. This system uses the best linear resin for chemical resistivity combined with four (4) times the antioxidant power and a crosslink outer wall for maximum long-term performance and durability.

Poly Processing Company developed the OR-1000™ oxidation resistance system in 1995. This lower density linear material serves to increase the service life of crosslinked polyethylene tanks in oxidizing chemical service (Sodium Hypochlorite, Sulphuric Acid, Hydrochloric Acid, and Nitric Acid). To develop the outstanding long-term physical properties of crosslinked polyethylene, the amount of antioxidant compounded into the material has to be limited. Although crosslinked polyethylene has superior properties to any other rotational molding grade polyethylene, the tank's useful service life will be reduced without the OR-1000™ system. In order to utilize the superior properties of crosslinked polyethylene, the OR-1000™ system was developed to greatly improve the service life in harsh oxidizing chemical environments. This material is a medium density linear based resin with a large amount of antioxidant added to it for the best oxidizing resistance system in the industry. The OR-1000™ system has been engineered to prevent de-lamination during the useful life of the tank.

To compare the effect of oxidizing chemicals on the OR-1000™ system and crosslinked polyethylene, 1/8" thick tensile bars of both OR-1000™ and crosslinked polyethylene were submerged in a manufacturer's storage tank. This tank handled a highly oxidizing chemical, 17% Sodium Hypochlorite, and was emptied and filled at least once a day. Every 30 days, samples were pulled and tensile and percent elongation was determined as well as ESCR tests. Oxidization or reduction in physical properties is indicated by reduced in elongation. After six months of testing, the elongation of the crosslinked polyethylene tensile bars had decreased 26% while OR-1000™ elongation had no change. This is due to the added antioxidant in the OR-1000™ system as well as the fact that the linear material used in the testing was a lower density material than the crosslinked material.

Crosslinked polyethylene provides superior environmental stress cracking resistance (ESCR) or sometimes generally referred to as resistance to slow crack growth (SCG) in almost all chemical applications. Two tests which clearly show this difference are the bent strip ESCR (ASTM D1693) with 10% Igepal where crosslink polyethylene does not fail in over 1000 hours compared to typical values for LMDPE of <400 hours. Another test which shows the slow crack growth difference with no surfactant (in air) is the polyethylene notch test (PENT) described in ASTM F 1473 and crosslink polyethylene again does not fail in over 1000 hours and LMDPE grades fail in <100 hours. Even though linear polyethylene grades with improved ESCR have become available over the past 10 to 15 years, they still do not match crosslinked polyethylene in SCG performance. Slow crack growth resistance as was shown earlier in this paper is an important property that can affect the long-term performance of tanks.

The best of both worlds is having the OR-1000™ system for the long-term oxidative resistivity characteristics (as discussed in the resin manufacturer's lab study), with the robustness of crosslinked polyethylene for the long-term durability and long useful life that is expected of industrial grade chemical storage tanks. This is why so many chemical manufacturers and distributors choose Poly Processing Company for engineered chemical storage solutions.

Crosslinked polyethylene tanks with the OR-1000™ system varying in sizes from 500 gallons to 14,950 gallons have been in true industrial and municipal use for over 10 years with excellent results. Poly Processing Company backs every crosslinked polyethylene tank with the OR-1000™ system with a 5 year full warranty on all suitable applications including sodium hypochlorite and hydrochloric acid, sulfuric acid 80%-98% carries a full 3 year warranty

Store your harsh oxidizing chemicals with the confidence and peace of mind that you deserve. Specify Poly Processing Company's crosslinked polyethylene tanks with the OR-1000™ system for longevity, safety, and leveraged investment. Please consult your distributor or Poly Processing Company at 1-866-590-6845 for your specific requirements.

NON-CONTROLLED COPY
INFORMATION SUBJECT TO CHANGE WITHOUT NOTICE
VERIFY REV LEVEL OF PAPER COPY WITH REV LEVEL ON PPC WEB SITE

Proposed Storage Tank

NOZZLE SCHEDULE & ACCESSORIES						
SERVICE	MK	STOCK NO.	SIZE	FITTING	DEG	ELEV

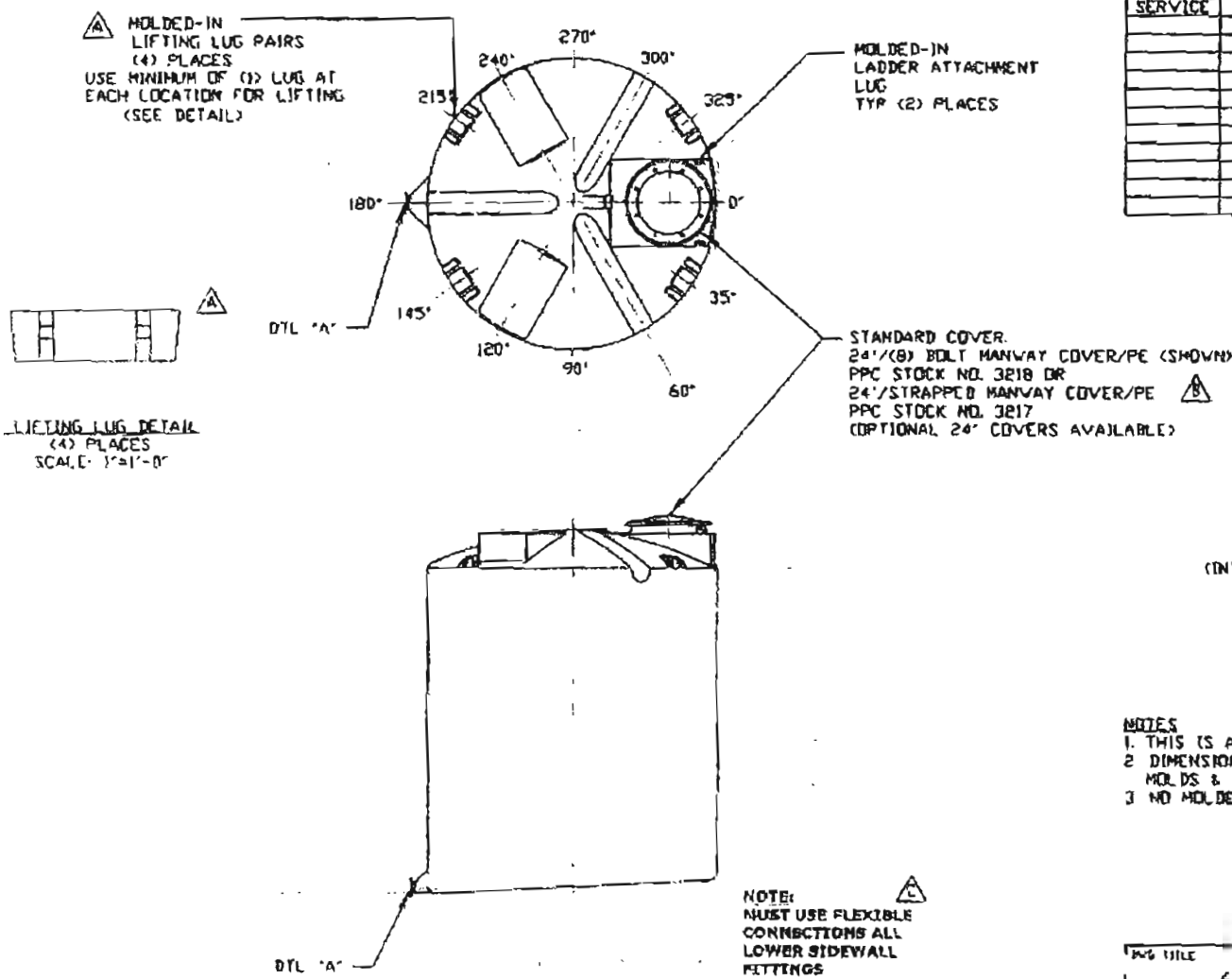

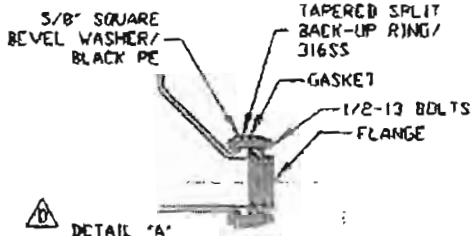

D DETAIL "A"
(INTEGRALLY MOLDED FLANGED OUTLET)
AVAILABLE IN 4" SIZE ONLY
SCALE: NONE

NOTES
1. THIS IS A COMPUTER GENERATED DWG. DO NOT REVISE BY HAND
2. DIMENSIONS WILL VARY ±3% DUE TO VARIATIONS IN MULTIPLE MOLDS & CONDITIONS PREVALENT DURING MANUFACTURE & USAGE.
3. NO MOLDED IN GALLONAGE MARKERS THIS TANK.

CALCULATED CAPACITIES/ VOLUME IN U.S. GALLONS		
DESIGN CAP	SLOPE VOL	TOTAL VOL
6283	470	6753

CONFIDENTIAL PROPERTY OF POLY PROCESSING COMPANY NOT FOR REPRINT OR USE WITHOUT PERMISSION

DWG TITLE
6250 GALLON SLOPE BOTTOM IMFO TANK

SCALE: 1/4"=1'-0"	POLY PROCESSING COMPANY	Western Region	DR: MB WILKERSON
DATE: 3/17/00			CK: D. RECTOR
		SHEET 1 OF 1	COMPUTER FILE 11206250 REV E

REV "E" REVISED FOR MOLD MODIFICATIONS BY:JB 6/16/053 CK:WM
REV "D" REVISED IMFO STYLE BY:JB 4/30/03 CK:WM
REV "C" ADDED FITTING NOTE BY:JB 3/3/02 CK:MBW
REV "B" REVISED STOCK NUMBER BY:JB 3/3/02 CK:MBW
REV "A" ADDED LIFTING LUGS & DETAIL BY:JB 10/31/02 CK:WM

tobeywade
STRUCTURAL ENGINEERS

October 2. 2009
Project No. R115-07-08

Mr. Aubry Burgess, Maintenance Supervisor
PHILIP SERVICES CORPORATION
ENVIRONMENTAL SERVICES DIVISION
2095 Newlands Drive East
Fernley. NV 89408

RE: TANK 101 CERTIFICATION REPORT

Dear Mr. Burgess:

In accordance with the Fernley Facility Amended Tank Replacement plan as prepared by Philip Services Corporation (PSC) and dated March 25. 2008. each tank is required to be certified by Independent Registered Professional Engineers (IRPE's) prior to being placed into service This report has been prepared to document the evaluations as performed by Tobey-Wade Consulting.

Background

Tank 101 is a Crosslinked Polyethethylene Tank with a 6,250 gallon capacity as manufactured by Poly Processing Company. Poly Processing has provided data relative to the tank's strength and its chemical resistance capabilities. Poly Processing has also provided an opinion as to any offsets observed in the tank shell.

Schiff Associates has evaluated the tank's suitability and compatibility for its proposed use in PSC's facility Their conclusions have been provided under separate cover to PSC.

Findings

Based on our research, analysis and structural observations, the following systems are in compliance with the Amended Tank Replacement plan:

- Tank 101 is situated on a reinforced concrete foundation system which is capable of adequately supporting the tank and its contents under static and dynamic conditions.
- Tank 101 is located in an area with sufficient secondary containment as required by 40 CFR Ch. I, 264.193.
- Tank 101 is stabile against overturning when subjected to loads based on 2006 International Building Code level seismic events.

ADDITION DATE 10/09/09

REVISION NUMBER 1

329 FLINT STREET ▪ RENO, NEVADA 89501 ▪ TEL (775) 324-7757 ▪ FAX (775) 324-7797

- Tank 101 is anchored to prevent sliding when subjected to loads based on 2006 International Building Code (IBC) level seismic events. Structural Observation and Special Inspection of the anchorage system has been performed as required by the IBC. The Structural Observation and Special Inspection reports are attached.

- Tank 101 has been tested for leakage and found to be watertight. The Tank Leakage Test report is attached.

- The exterior of Tank 101's shell wall has been inspected and found to be generally undamaged. The Tank Shell Inspection report is attached.

Structural Observation, tank leakage inspections and tank shell inspections were performed by Tobey-Wade Consulting under my direct supervision. Special Inspections were performed by ICC-certified inspectors from Black Eagle Consulting based on anchorage requirements provided by Tobey-Wade Consulting.

Certification Statement

I certify under penalty of law that this report and all attachments were prepared under my direction and supervision in accordance with a system developed to assure that qualified personnel properly gather and evaluate the information submitted. Based on my inquiry of the person or persons who manage the system or those persons directly responsible for gathering the information, the information, submitted is, to the best of my knowledge and belief, true, accurate, and complete. I am aware that there are significant penalties for submitting false information, including the possibility of fines and imprisonment for knowing violations.

This report has been prepared in accordance with acceptable engineering practices and is subject to the assumptions and limitations stated in the report. Also note that this certification covers the aforementioned aspects of Tank 101 only.

Please feel free to contact me at your convenience should you have any questions relating to our findings.

Sincerely,
TOBEY-WADE CONSULTING

Terrence R. Tobey

Terrence R. Tobey, S.E.
Principal Structural Engineer

TERRENCE R. TOBEY
10-7-09

Exp.
6·30·10

ADDITION DATE 10/09/09

REVISION NUMBER 1

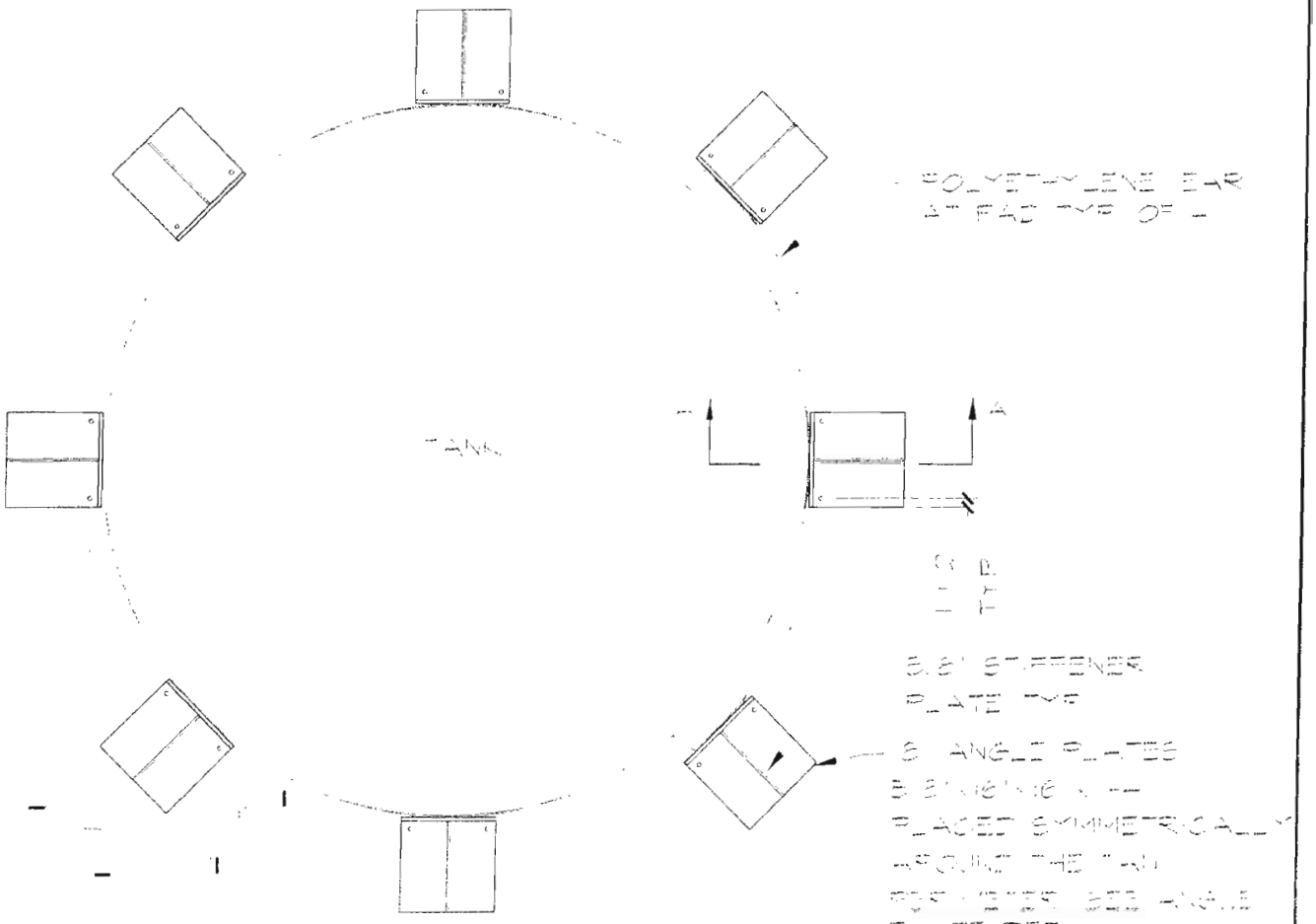

TANK NO'S 101-103 & 105-106
CYLINDRICAL FLAT BOTTOM TANK
SCALE: 3/8" = 1'-0"

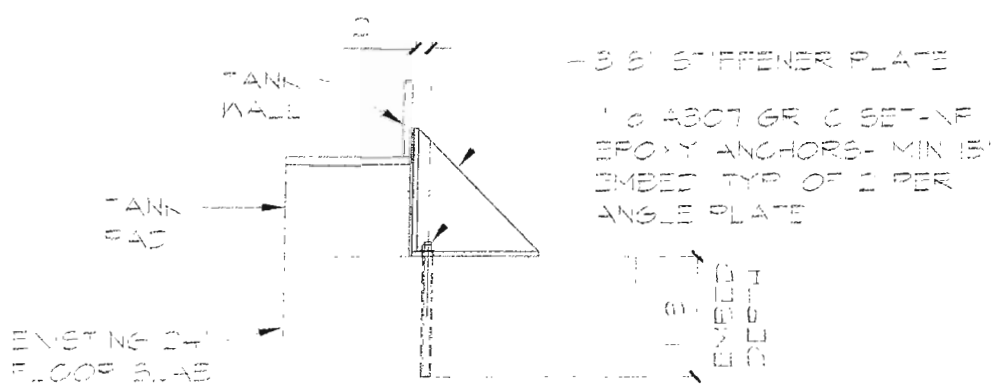

SECTION A-A
NTS

AS-BUILT DRAWING
DATED OCT 5 2009

tobey wade
CONSULTING
329 Flint Street
Reno, Nevada 89501
Tel. (775) 324-7757 Fax (775) 324-7797

PHILIP SERVICES CORPORATION
FERNLEY FACILITY
TANK NO's 101-103 & 105-106
AS-BUILT ANCHORAGE DETAILS
FERNLEY, NEVADA

Project No
R115-07-08

ADDITION DATE 10/09/09
Date. OCT 1 2008

REVISION NUMBER 1

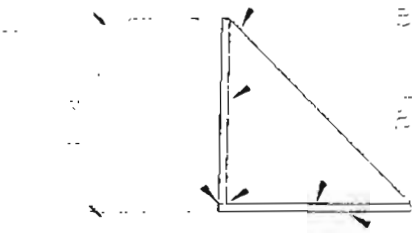

AS-BUILT DRAWING
ENTERED OCT 5 2008

tobey wade
CONSULTING
329 Flint Street
Reno, Nevada 89501
Tel. (775) 324-7757 Fax (775) 324-7797

PHILIP SERVICES CORPORATION
FERNLEY FACILITY

TANK NO's 101-103 & 105-106
AS-BUILT ANCHORAGE DETAILS

FERNLEY, NEVADA

Project No
R115-07-08

ADDITION DATE 10/09/09

Date OCT 1, 2008

REVISION NUMBER 1

NON-CONTROLLED COPY
INFORMATION SUBJECT TO CHANGE WITHOUT NOTICE
VERIFY REV LEVEL OF PAPER COPY WITH REV LEVEL ON PPC WEB SITE

Proposed Storage Tank

NOZZLE SCHEDULE & ACCESSORIES						
SERVICE	MK	STOCK NO.	SIZE	FITTING	DEG	ELEV

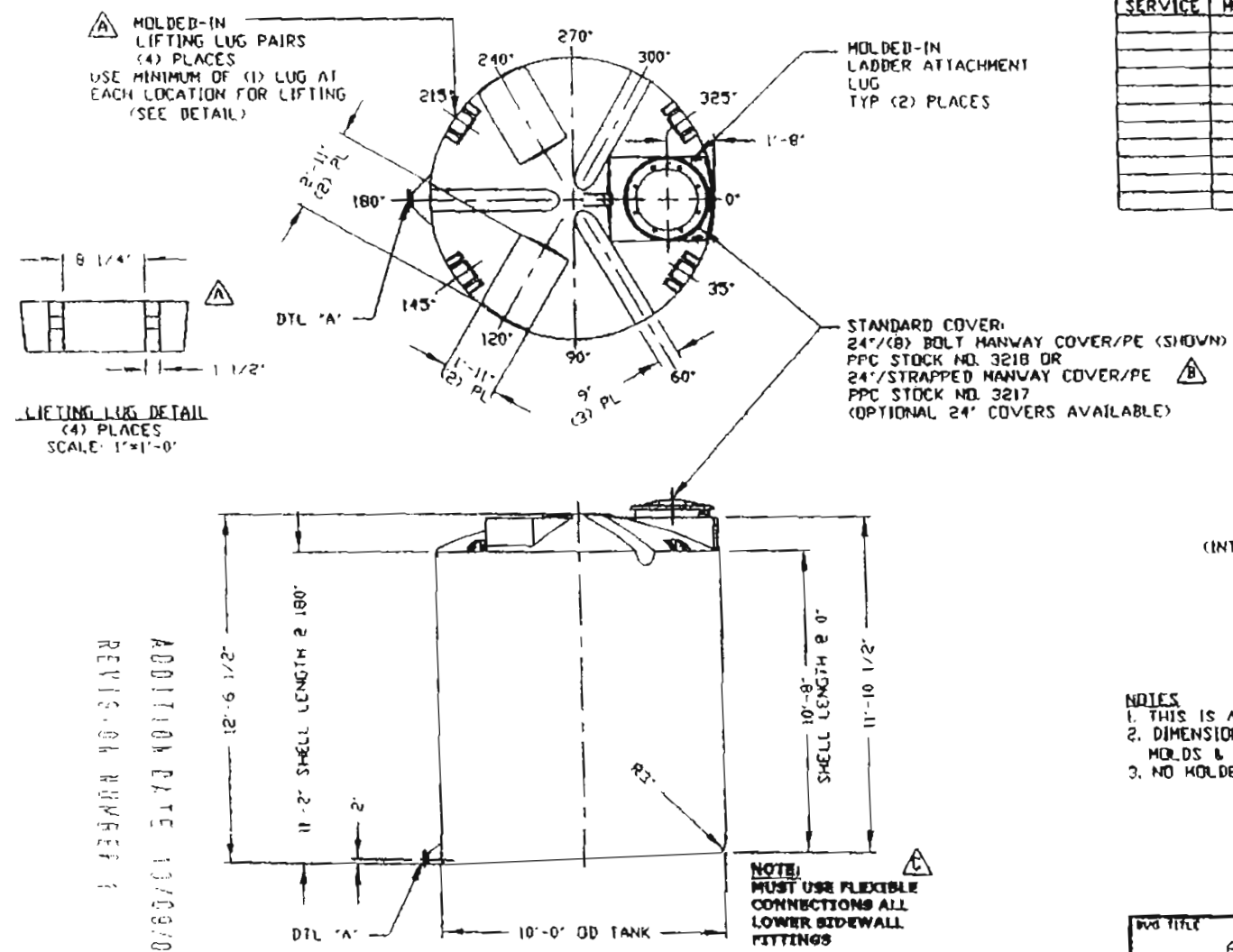

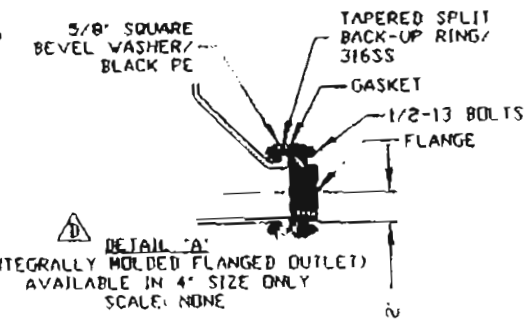

NOTES
1. THIS IS A COMPUTER GENERATED DWG. DO NOT REVISE BY HAND.
2. DIMENSIONS WILL VARY ±3% DUE TO VARIATIONS IN MULTIPLE MOLDS & CONDITIONS PREVALENT DURING MANUFACTURE & USAGE.
3. NO MOLDED IN GALLONAGE MARKERS THIS TANK.

CALCULATED CAPACITIES/ VOLUME IN U.S. GALLONS		
DESIGN CAP	DOME VOL	TOTAL VOL
6283	470	6753

CONFIDENTIAL PROPERTY OF POLY PROCESSING COMPANY NOT FOR REPRINT OR USE WITHOUT PERMISSION

DWG TITLE: 6250 GALLON SLOPE BOTTOM IMFO TANK

SCALE: 1/4"=1'-0"
DATE: 3/17/00
POLYPROCESSING COMPANY
Western Region
DR: MB WILKERSON
CK: D. RECTOR
SHEET: 1 OF 1
COMPUTER FILE: 11206250
REV: E

REV 'E' REVISED FOR MOLD MODIFICATIONS BY:JB 6/16/053 CK:WH
REV 'D' REVISED IMFO STYLE BY:JB 4/30/03 CK:WH
REV 'C' ADDED FITTING NOTE BY:JB 3/3/02 CK:MBW
REV 'B' REVISED STOCK NUMBER BY:JB 3/3/02 CK:MBW
REV 'A' ADDED LIFTING LUGS & DETAIL BY:JB 10/31/02 CK:WH

ADDITION DATE 10/09/00
REVISION NUMBER 1

POLYPROCESSING
COMPANY, LLC

January 21, 2009

Aubry Burgess
Phillips Services
2095 Newlands Dr. E.
Fernley, NV 89408

Re: Tank with serial number C0802026 - 6250 gallon slope bottom tank

Dear Aubry,

Thank you for sending the pictures to show us what the concerns are with the tank referenced above.

I understand that there is some concern in regards to the appearance of the offset parting lines. The offset is what we refer to as a "witness line". This is where the pieces of the mold are bolted together in preparation of manufacturing the polyethylene part. If you look inside the tank you will see that it is a homogenous part with no lines. This offset will not affect the integrity, warranty or service life of the tank.

In addition there was some concern about a gouge in the wall of the tank. In looking at the picture this appears to be on the surface only and will not affect the integrity, warranty or service life of the tank. I am including a typical wall thickness chart for the tank so you can see that this is not deep enough to be a concern. If you want to sand the area of the gouge you can do so.

Please give us a call if there is anything else you need.

Sincerely,

Patti Burch
Poly Processing Company
Technical Support
PB/pb

ADDITION DATE 10/09/09

REVISION NUMBER 1

TANK INSPECTION FORM

Philip Services Corporation / 21 EMI
PSC Fernley Facility
2095 Newlands Drive East
Fernley, NV 89408
(775)575-2760

TANK NO.: 101

TANK SHELL INSPECTION

Date Inspected: Feb. 20, 2009

Findings: No scrapes, gouges or nicks.

TANK ANCHORAGE STRUCTURAL OBSERVATION

Type of Anchorage System:	Typical steel anchor plate
Date Inspected:	Feb. 20, 2009
# of Anchor Plates:	8
AB Type and Diameter:	1 inch diameter
Plate Contact with Tank:	Yes (within .5 inch at the top of the steel anchor plate)
Special Inspection Completed?	Yes (see Black Eagle Inspection reports)

TANK LEAKAGE TEST

Date Filled: Feb. 19, 2009 Water Level below Inspection Hatch: 35" +/-

Date of Re-inspection: Feb. 20, 2009 Water Level below Inspection Hatch: 34.75"

Shell Leakage? No

Leakage on Floor/Drain Pan at Manifold? No

INSPECTOR: _____ **DATE:** _____

INSPECTOR: Terence Lahey **DATE:** 2 20 09

ADDITION DATE 10/05/09

REVISION NUMBER 1

SPECIAL INSPECTOR DAILY REPORT

Page___of___

BLACK EAGLE CONSULTING, INC.
GEOTECHNICAL AND CONSTRUCTION SERVICES
1345 Capital Blvd., Suite A, Reno, Nevada 89502-7140
Phone (775) 359-6600 Fax (775) 359-7766

Project: Tank Anchors	Project No.: 560 02-1	Date: 2-19-09
Client: PSC	Contact: Aubry	Total Hrs.: 4
Location: Fernley	Weather: fair	Temp.:
Contractor: In-house	Contact: Aubry	Stand By Hrs.:

Equipment in use: _____

Describe Inspections Made, Including Locations: Shop - observed epoxy installation of 80 1" dia ASTM A307 grade C all thread 18" long into 1 1/8" dia. 15" deep rotohammered holes using standard and carbide bits, that were then brushed and blown clean. Each tank has 8 anchor plates equally spaced around tanks 101, 102, 103, 105+106, with two all threads embedded at each plate.
Epoxy is Simpson Set-XP and was applied as per manufacturer specs.

List Tests Made: _____

List Items Requiring Correction, Corrections of Previously Listed Items, and Previously Listed Uncorrected Items:

List Changes to Approved Plans Authorized by the Building Official and Architect or Engineer: _____

Comments: _____

Signed: _____ Date: 2-19-09

Print Full Name: ROBERT RODDEN I.D. Number: 5259600

Reviewed By: _____ Date: _____

White to *Office* Canary to *Field File* Green to *Personal File*

cc:

ADDITION DATE 10/09/09
DAQC SIDR #4
REVISION NUMBER 1

SPECIAL INSPECTOR DAILY REPORT

BLACK EAGLE CONSULTING, INC.
GEOTECHNICAL AND CONSTRUCTION SERVICES
1345 Capital Blvd., Suite A, Reno, Nevada 89502-7140
Phone (775) 358-6600 Fax (775) 358-7766

Project: PSC Tank Anchors	Project No.: 560 02-1	Date: 2-9-09
Client: PSC	Contact: Aubrey	Total Hrs.: 2
Location: Fernley	Weather:	Temp.:
Contractor: In house	Contact: Aubrey	Stand By Hrs.:

Equipment In use:

Describe Inspections Made, Including Locations: Shop - weld inspection of 48 plate assembly tank anchors for six tanks # 101, 102, 103, 105, 106 & 107. Welds are visually acceptable to AWS D1.1 and are of the proper size type length and location as per approved plans.
Process, equipment and consumables comply with AWS D1.1

List Tests Made:

List Items Requiring Correction, Corrections of Previously Listed Items, and Previously Listed Uncorrected Items:

List Changes to Approved Plans Authorized by the Building Official and Architect or Engineer:

Comments:

Signed: Robert Rodden Date: 2-9-09

Print Full Name: ROBERT RODDEN I.D. Number: 5259600

Reviewed By Date

White to *Office* Canary to *Field File* Green to *Personal File*

cc:

ADDITIONAL SHEETS

REVISION NUMBER 1

SPECIAL INSPECTOR DAILY REPORT

Page 1 of 1

BLACK EAGLE CONSULTING, INC.
GEOTECHNICAL AND CONSTRUCTION SERVICES
1345 Capital Blvd., Suite A, Reno, Nevada 89502-7140
Phone (775) 359-6600 Fax (775) 359-7766

PROJECT:	PSC	PROJECT #:	540-02-1	DATE:	2/23/2009
CLIENT:	PSC	CONTACT:	AUBRY	TOTAL HRS.:	2.5
LOCATION:	FERNLY, NV	WEATHER:	OVERCAST AND COOL	TEMP:	50'S
CONTRACTOR:	PSC	CONTACT:	AUBRY	STAND BY HRS.:	N/A

EQUIPMENT IN USE: CARPENTER CREW

DESCRIBE INSPECTIONS MADE, INCLUDING LOCATIONS:

ARRIVED ON SITE TO PROVIDE OBSERVATION, TESTING, AND INSPECTION FOR HIGH STRENGTH BOLTING FOR STAINLESS STEEL 1" DIAMETER ALL THREAD CONNECTIONS. UPON ARRIVAL OBSERVED ALL CONNECTIONS HAD BEEN COMPLETED AND WERE READY FOR TORQUE/TENSION TESTING. OBSERVED EIGHT (8) PIECES OF ANGLE IRON WERE PLACED AROUND THE BASE OF EACH STORAGE CONTAINER WITH TWO (2) BOLTS PER CONNECTION. PERFORMED TORQUE/TENSION TESTING USING A CALIBRATED WRENCH SET FOR 300LBS. PERFORMED TORQUE/TENSIONING TESTING FOR >/= 50% OF THE CONNECTIONS FOR THE 1" DIAMETER ALL THREADS FOR STORAGE CONTAINERS # 101, 102, 103, 105, & 106. OBSERVED ALL CONNECTIONS TESTED MET OR EXCEEDED THE REQUIRED SPECIFICATIONS WITH NO DEFICIENCIES NOTED. INFORMED CONTRACTOR OF RESULTS AND OBSERVATIONS AND

LIST TESTS MADE:

PERFORMED TORQUE/TENSIONING TESTING FOR >/= 50% OF THE CONNECTIONS FOR 1" DIAMETER ALL THREADS FOR STORAGE CONTAINERS # 101, 102, 103, 105, & 106. PERFORMED TESTING TO 300LBS AS SPECIFIED.

LIST ITEMS REQUIRING CORRECTION, CORRECTIONS OF PREVIOUSLY LISTED ITEMS, AND PREVIOUSLY LISTED UNCORRECTED ITEMS:

N/A

LIST CHANGES TO THE APPROVED PLANS AUTHORIZED BY THE BUILDING OFFICIAL AND ARCHITECT OR ENGINEER:

N/A

SIGNED: _____ DATE: 2/23/2009

PRINT FULL NAME: MICHAEL SIMMONS I.D. NUMBER: 1084885-49/84

mcl

ADDITIONAL TESTING

REVISION NUMBER 1

TANK DATA SHEET

RCRA-Regulated? **YES**

Tank Location: **Tank Storage Bay - Acid Area**

Tank Name: **Waste Acid Storage**

Tank Numbers: **#101 - #111**

Process Description: **Acid Storage**

Vessel Fluid: **Waste Acid Mixtures**

Specific Gravity: **≤ 1.90**

Freeboard At Working Vol (ft): **6" + dome top**

Normal Operating Pressure (psig): **Atmospheric**

Temperature (°F): **Ambient**

	Material	Thickness	Type
Bottom	**Cross-link Polyethylene**	**5/8" nominal**	**Flat, Sloped**
Shell	**Cross-link Polyethylene**	**Varies .40" - .90" top to bottom**	**Cylindrical**
Top	**Cross-link Polyethylene**	**Design Avg. .40"**	**Domed Roof**

Working Volume (USG): **6000**

Insulation: **None**

Nominal Volume (USG): **6280**

Method of Construction: **Rotationally Molded**

Tank O.D. (ft): **10' - 0"**

Tank Height or Length (ft): **12' – 6 1/2"**

Design Code Used: **ASTM D1998**

Date in Service: **2009**

Anchorage: **Seismic restraints bolted to concrete. Anchorage designs per 2006 IBC.**

Connections

Item No.	Size (In.)	Gasket	Description
1	**24"**		**Roof manway / E-vent**
2	**4"**		**Vent fitting to Scrubber**
3	**3"**		**Tank Fill fitting**
4	**2"**		**Level Sensor Connection**
5	**4"**		**Flange Drain fitting**
6			**Lifting Lugs**
7			
8			
9			
10			
11			
12			
13			
14			
15			

Tank Sketch

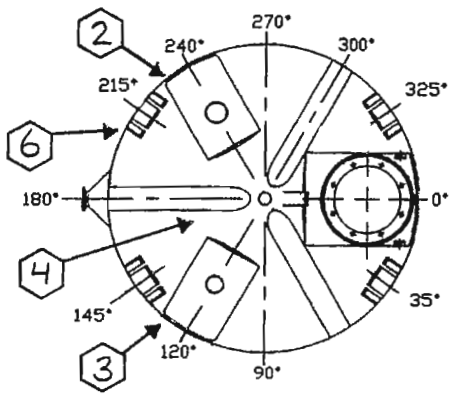

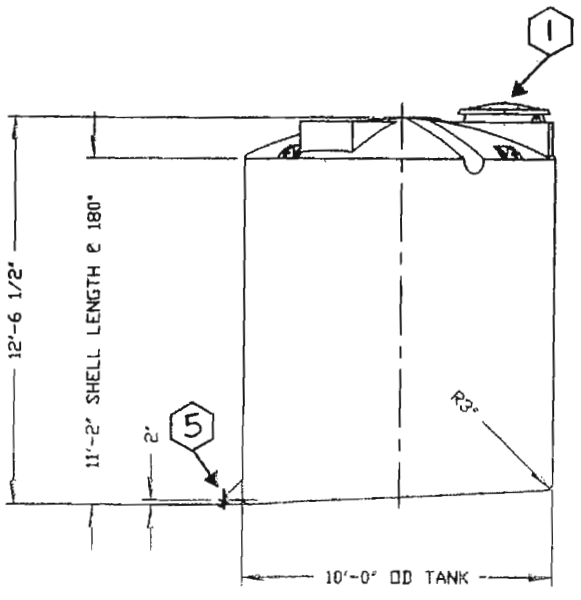

Tank Mfgr: **Poly Processing Co.**

Remarks: **Poly Processing stock #1206250. Tank manufactured of hi-density cross-linked rotationally molded polyethylene with "Extra heavy wall thickness" for 1.9 sp. gr. service. Tank includes OR-1000 oxidation resistant liner.**

SCHIFF ASSOCIATES

gbell@schiffassociates.com

www.schiffassociates.com
Consulting Corrosion Engineers – Since 1959

October 5, 2009 via email to: Burgess, Aubry [ABurgess@pscnow.com]

PSC ENVIRONMENTAL SERVICES
2095 Newlands Drive E
Fernley, NV 89408

Attention: Mr. Aubry Burgess
Maintenance Supervisor

Re: Material Compatibility/Corrosion Certification Letter for
Tank 102 for Acid Storage
Amended Tank Replacement Plan
Fernley, NV
SA#08-1383LGL

Dear Mr. Burgess:

We have conducted the following investigations and research relative to the suitability and compatibility of the 6,250 Gallon slope bottom High Density Polyethylene (HDPE) tanks fabricated by PolyProcessing with OR-1000™ lining system for pre-treatment acid storage for typical inlet temperatures of less than 100°F and up to 140°F depending on concentrations and specific design conditions. Per the attached information, "*The maximum temperature rating for crosslinked polyethylene material is 150° F. Above that temperature the thermal stabilizers in the plastic are more rapidly consumed. Continued use will cause embrittlement and a reduction in the useful life of the part. Temperature services from 100° F to 150° F are acceptable applications, however, thicker tank walls are required to maintain a safe design.*"

1) Reviewed PolyProcessing Company's product information provided on tank design and compatibility.

2) Conducted independent research on compatibility of HDPE and polyethylenes with acids as a function of temperature.

3) Visited the PSC facility in Fernley in December 2008 to understand the anticipated process flow and conditions of waste streams at the site.

4) Reviewed supplemental information requested from PolyProcessing Company regarding issues identified during site visit.

1489 W Warm Springs Road #110 · Henderson, NV 89014
Phone: 702.966.8266 · Fax: 702.946.6767

ADDITION DATE 10/09/09
REVISION NUMBER 1

The tank design is suitable for acid storage per the manufacturer's information in the position as Tank 102 in the waste processing stream of the PSC Facility as configured and intended per the Amended Tank Replacement Program outlined in the letter from Thomas Nelson of PSC to Nevada Division of Environmental Protection dated March 25, 2008.

CERTIFICATION

I certify under penalty of law that this document and all attachments were prepared under my direction or supervision according to a system designed to assure that qualified personnel properly gather and evaluate the information submitted. Based on my inquiry of the person or persons who manage the system, or those persons directly for gathering the information, the information submitted is, to the best of my knowledge and belief, true, accurate, and complete. I am aware that there are significant penalties for submitting false information, including the possibility of fine and imprisonment for knowing violations.

CLOSURE

Our services have been performed with the usual thoroughness and competence of the engineering profession. No other warranty or representation, either expressed or implied, is included or intended.

Sincerely,
SCHIFF ASSOCIATES

GRAHAM E.C. BELL
EXP: 12-31-10
MECHANICAL

Graham E.C. Bell, PE
Principal Engineer
NACE International Corrosion Specialist #5350

Attachments: Proposed Storage Tank Drawing
Waste Information Provided by PSC on PolyProcessing Data Sheet
PolyProcessing Technical Bulletin, Chemical Resistance Technical Information
OR-1000 Tank Cut Sheet
OR-1000 Cut Sheet
OR-1000 Product Sheet
PolyProcessing Polyethylene Tank Life Expectancy
PolyProcessing Chemical Compatibility Data including Temperature Dependence
PolyProcessing Technical Bulletin, Crosslinked Polyethylene with OR-1000™ System, Dated June 2005, Rev. A

ADDITION DATE 10/09/09

REVISION NUMBER 1

NON-CONTROLLED COPY
INFORMATION SUBJECT TO CHANGE WITHOUT NOTICE
VERIFY REV LEVEL OF PAPER COPY WITH REV LEVEL ON PPC WEB SITE

Proposed Storage Tank

NOZZLE SCHEDULE & ACCESSORIES						
SERVICE	MK	STOCK NO.	SIZE	FITTING	DEG	ELEV

A MOLDED-IN LIFTING LUG PAIRS (4) PLACES
USE MINIMUM OF (1) LUG AT EACH LOCATION FOR LIFTING (SEE DETAIL)

MOLDED-IN LADDER ATTACHMENT LUG TYP (2) PLACES

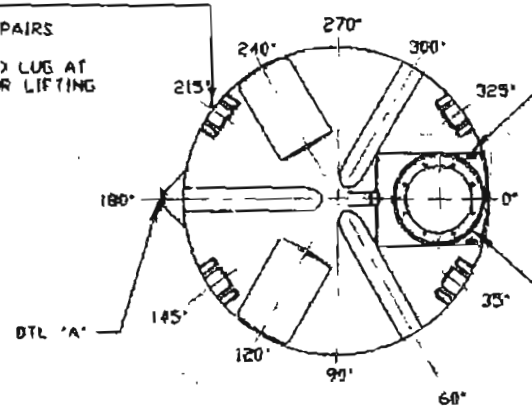

LIFTING LUG DETAIL
(4) PLACES
SCALE: 1"=1'-0"

STANDARD COVER:
24"/(8) BOLT MANWAY COVER/PE (SHOWN)
PPC STOCK NO. 3218 OR
24"/STRAPPED MANWAY COVER/PE B
PPC STOCK NO. 3217
(OPTIONAL 24" COVERS AVAILABLE)

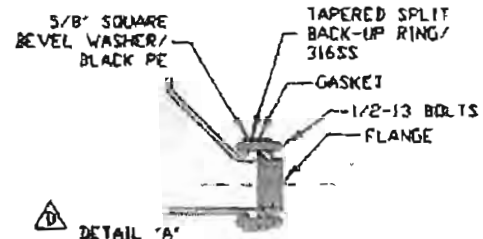

D DETAIL "A"
(INTEGRALLY MOLDED FLANGED OUTLET)
AVAILABLE IN 4" SIZE ONLY
SCALE: NONE

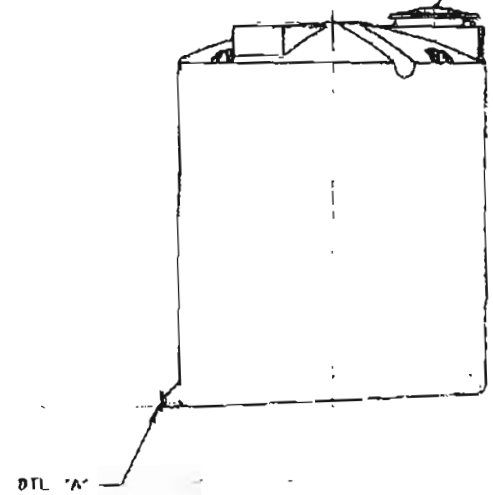

C NOTE:
ADJUST USE FLEXIBLE CONNECTIONS ALL LOWER SIDEWALL FITTINGS

NOTES
1. THIS IS A COMPUTER GENERATED DWG. DO NOT REVISE BY HAND
2. DIMENSIONS WILL VARY ±3% DUE TO VARIATIONS IN MULTIPLE MOLDS & CONDITIONS PREVALENT DURING MANUFACTURE & USAGE.
3. NO MOLDED IN GALLONAGE MARKERS THIS TANK.

CALCULATED CAPACITIES/ VOLUME IN U.S. GALLONS		
DESIGN CAP.	SLOPE VOL. TO TOM. VOL.	
6283	470	6753

CONFIDENTIAL PROPERTY OF POLY PROCESSING COMPANY NOT FOR REPRINT OR USE WITHOUT PERMISSION

DWG TITLE
6250 GALLON SLOPE BOTTOM IMFD TANK

SCALE: 1/4"=1'-0"
DATE: 3/17/00
POLY PROCESSING COMPANY
DR: MB WILKERSON
CK: D. RECTOR
SHEET: 1 OF 1
COMPUTER FILE: 11206250
REV: E

REV "E" REVISED FOR MOLD MODIFICATIONS BY:JB 6/16/053 CK:VM
REV "D" REVISED IMFD STYLE BY:JB 4/30/03 CK:VM
REV "C" ADDED FITTING NOTE BY:JB 3/3/02 CK:MBW
REV "B" REVISED STOCK NUMBER BY:JB 3/3/02 CK:MBW
REV "A" ADDED LIFTING LUGS & DETAIL BY:JB 10/31/02 CK:VM

Table I

The following chemicals do not attack or permeate high density crosslinkable polyethylene resins up to 100° F. Each application should be considered individually. All concentrations apply except where noted.

- Acetic Acid
- Aluminum Salts
- Alum
- Ammonium Hydroxide
- Ammonium Salts
- Amyl Alcohol
- Antimony Salts
- Arsenic Acid
- Barium Hydroxide
- Benzene Sulfonic Acid
- Bismuth Salts
- Boric Acid
- Bromic Acid
- Butanediol
- Butyl Alcohol
- Calcium Hydroxide
- Calcium Salts
- Chromic Acid<50%
- Citric Acid
- Copper Salts
- Detergents
- Diazo Salts
- Diethyl Carbonate
- Diethanol Amine
- Diethylene Glycol
- Diglycolic Acid
- Dimethylamine
- Dimethyl Formamide
- Ethyl Alcohol
- Ethylene Glycol
- Ferric Salts
- Ferrous Salts
- Fluoboric Acid
- Fluosilicic Acid
- Formic Acid
- Gallic Acid
- Gluconic Acid
- Hexanol
- Hydrazone<35%
- Hydrazine Hydrochloride
- Hydriodic Acid
- Hydrobromic Acid
- Hydrochloric Acid
- Hydrofluoric Acid
- Hydrofluorosilicic Acid
- Hydrogen Peroxide<52%
- Hydrogen Phosphide
- Hydroquinone
- Hypochorous Acid
- Iodine Solutions
- Lactic Acid
- Latex
- Lead Acetate
- Magnesium Salts
- Mercuric Salts
- Mercurous Salts
- Mercury
- Methyl Alcohol
- Methylsulfuric Acid
- Michel Salts
- Nicotinic Acid
- Nitric Acid<50%
- Oxalic Acid
- Perchloric Acid
- Phenol<10%
- Potassium Hydroxide
- Potassium Salts
- Phosphoric Acid
- Photographic Solutions
- Propyl Alcohol
- Propylene Glycol
- Sea Water
- Selenic Acid
- Sewage
- Silicic Acid
- Silver Salts
- Soap Solutions
- Sodium Ferricyanide
- Sodium Ferrocyanide
- Sodium Hydroxide
- Sodium Hypochlorite<9%
- Sodium Salts
- Sodium Sulfonates
- Stanic Salts
- Stannous Salts
- Starch Solutions
- Stearic Acid
- Sulfuric Acid <80%
- Sulfurous Acid
- Sugar Solution
  - Glucose
  - Lactose
  - Sucrose, etc.
- Tannic Acid
- Tanning Extracts
- Tartaric Acid
- Titinium Acid
- Toluene Sulfonic Acid
- Triethanolamine
- Urea
- Vinegar
- Wetting Agents
- Zinc Salts

Concentrations above noted are percentages. For more specific concentrations, contact factory for guidelines concerning these applications.

Table II

The following oils and organic chemicals do not attack HDXLPE resins. They will be absorbed into the wall of the tank; however, there should be no loss of chemical. Because of this absorption, no chemical other than the original should be stored in the tank as long as contamination may result as the absorbed oil is leached out. Storage at temperatures up to 100° F are possible provided the effects of the absorption on the properties of the tank are not prohibitive.

Fatty Acids	Mineral Oils	Animal Fats	Vegetable Oil
Butyric	Lube	Lard	Corn
Lauric	Transformer	Fish Oil	Coconut
Linoleic	Hydraulic	Musk Oil	Cottonseed
Oleic		Whale Oil	Olive
Palmitic			Peanut
Stearic			

Table III

The following organic chemicals do not attack high density crosslinkable polyethylene resins. They will be absorbed into the wall of tank and a permeation loss will occur. Because of this permeation and the effect it has on the physical properties of the tank, it is generally not recommended that these chemicals be storage at room temperatures above 130° F. However, their use largely depends on such factors as size of tank, its location, toxicity of the chemical and applicable codes such as NFPA, OSHA, etc.

- Aniline
- Benzene
- Carbon Tetrachloride
- Chlorobenzene
- Cyclohexanol
- Cyclohexanone
- Dibutylphthalate
- Diesel Fuel
- Dimethylamine
- Ethyl Butyrate
- Ethylene Chlorohydrin
- Fuel Oil
- Furfural
- Aliphatic Hydrocarbons (hexane, octane, hexene, octane, etc.)
- Jet Fuel
- Gasoline
- Nitrobenzene
- Octyl Cresol
- Propylene Dichloride
- Toluene
- Xylene

The information and data contained herein are believed to be accurate and reliable as of the date hereof. Such information and data are presented solely as guidelines for your consideration and investigation. Because conditions of use are beyond our control, we make no warranties, express or implied, and assume no liability in connection with any use of this information. Nothing herein is to be construed as permission or a recommendation to infringe any patent. Each user bears responsibility for determining whether any specific use is appropriate and for adopting precautions in connection therewith. We suggest that you conduct tests to determine the suitability of our products for your particular purposes. Nothing herein waives any of our rights. We expressly assume no responsibility for the results obtained or consequences resulting from the use of this information.

POLYPROCESSING COMPANY

Providing Solutions Through Innovation

Chemical Resistance

Chemical Resistance

Chemical "resistance" and "compatibility" are synonymous terms used in relation to the ability of a plastic to function in different environments. In regards to polyethylene chemical storage tanks, chemical resistance encompasses the total effect a product would have on a tank. The factors that make up the overall compatibility of a chemical to a rotomolded tank are (1) chemical attack, (2) absorption or permeation, and (3) solubility and stress crack resistance.

Chemical Attack

By definition, chemical attack involves an actual chemical reaction with the plastic. This can be a breaking of molecular chains and/or an addition of chemical groups to the molecule. For example, in the case of an oxidation reaction with polyethylene, both occur with the addition of carbonyl groups. This causes and eventual loss of properties to the point that a tank would not be serviceable.

Polyethylene in general is one of the most inert plastics available. Very few chemicals react with polyethylene and with those that do, the rate is relatively slow. The ultra high molecular weight characteristics of high density crosslinked polyethylene resins after crosslinking makes these particular polyethylenes even more resistant than other grades.

Permeation

This involves the physical absorption of the chemical into the polyethylene. If this is a volatile chemical, then an actual loss of the product can occur as the chemical vaporizes from the outer wall of the tank. The amount of absorption is generally limited to 3 to 7 percent by weight of the polyethylene. Also, the loss of volatile products is relatively small. For example, a 25-gallon tank with a 50-mil wall will only lose between 5 and 6 grams of gasoline per day due to permeation. The thicker the wall, the lower the rate of loss.

The absorption of a product into the wall of a tank will cause more property changes. The tensile strength is reduced approximately 15 to 20 percent and stiffness approximately 20 percent. Normally, this does not affect the utility of a tank or prohibit the application. The property losses due to permeation are offset by increasing the design wall thickness of the tank.

Elevated Temperature

The effects of elevated temperature (100° F or greater) on polyethylene tank are predictable and expected. Polyethylene, which is a flexible material, becomes even more flexible when heated. It will, therefore, bulge more at an elevated temperature than at room temperature.

By looking at the design hoop stress values for various temperatures, one can see the effects of increased temperature services. The values remain relatively constant up to 100° F, after which they begin to decrease.

100° F	600 psi	130° F	450 psi
110° F	550 psi	140° F	400 psi
120° F	500 psi	150° F	300 psi

A rise in temperature of 50° F (100° F to 150° F) reduces the design hoop stress value from 600 psi to 300 psi and doubles the required wall thickness. It follows that simply increasing the service rating of a tank from 1.35 S.G. to 1.65 S.G., or even to 1.90 S.G. is not necessarily sufficient. The proper wall thickness must be calculated for the temperature of service.

The maximum temperature rating for crosslinked polyethylene material is 150° F. Above that temperature the thermal stabilizers in the plastic are more rapidly consumed. Continued use will cause embrittlement and a reduction in the useful life of the part. Temperature services from 100° F to 150° F are acceptable applications, however, thicker tank walls are required to maintain a safe design. Consult the factory when application such as these arise.

Table I

The following chemicals do not attach or permeate high density crosslinkable polyethylene resins up to 100° F. Each application should be considered individually. All concentrations apply except where noted.

Acetic Acid
Aluminum Salts
Alum
Ammonium Hydroxide
Ammonium Salts
Amyl Alcohol
Antimony Salts
Arsenic Acid
Barium Hydroxide
Benzene Sulfonic Acid
Bismuth Salts
Boric Acid
Bromic Acid
Butanediol
Butyl Alcohol
Calcium Hydroxide
Calcium Salts
Chromic Acid<50%
Citric Acid
Copper Salts
Detergents
Diazo Salts
Diethyl Carbonate
Diethanol Amine
Diethylene Glycol
Diglycolic Acid
Dimethylamine
Dimethyl Formamide
Ethyl Alcohol
Ethylene Glycol
Ferric Salts
Ferrous Salts
Fluoboric Acid
Fluosilicic Acid
Formic Acid
Gallic Acid
Gluconic Acid
Hexanol
Hydrazone<35%
Hydrozine Hydrochloride
Hydriodic Acid
Hydrobromic Acid
Hydrochloric Acid
Hydrofluoric Acid
Hydrofluorosilicic Acid
Hydrogen Peroxide<52%
Hydrogen Phosphide
Hydroquinone
Hypochorous Acid
Iodine Solutions
Lactic Acid
Latex
Lead Acetate
Magnesium Salts
Mercuric Salts
Mercurous Salts
Mercury
Methyl Alcohol
Methylsulfuric Acid
Michel Salts
Nicotinic Acid
Nitric Acid<50%
Oxalic Acid
Perchloric Acid
Phenol<10%
Potassium Hydroxide
Potassium Salts
Phosphoric Acid
Photographic Solutions
Propyl Alcohol
Propylene Glycol
Sea Water
Selenic Acid
Sewage
Silicic Acid
Silver Salts
Soap Solutions
Sodium Ferricyanide
Sodium Ferrocyanide
Sodium Hydroxide
[1]Sodium Hypochlorite<9%
Sodium Salts
Sodium Sulfonates
Stanic Salts
Stannous Salts
Starch Solutions
Stearic Acid
[1]Sulfuric Acid <80%
Sulfurous Acid
Sugar Solution
Glucose
Lactose
Sucrose, etc.
Tannic Acid
Tanning Extracts
Tartaric Acid
Titinium Acid
Toluene Sulfonic Acid
Triethanolamine
Urea
Vinegar
Wetting Agents
Zinc Salts

[1]Concentrations above stated percentage require special considerations, contact factory for guidelines concerning these applications.

Table II

The following oils and organic chemicals do not attack HDXLPE resins. They will be absorbed into the wall of the tank; however, there should be no loss of chemical. Because of this absorption, no chemical other than the original should be stored in the tank as long as contamination may result as the absorbed oil is leached out. Storage at temperatures up to 100° F are possible provided the effects of the absorption on the properties of the tank are not prohibitive.

Fatty Acids	**Mineral Oils**	**Animal Fats**	**Vegetable Oil**
Butyric	Lube	Lard	Corn
Lauric	Transformer	Fish Oil	Coconut
Linoleic	Hydraulic	Musk Oil	Cottonseed
Oleic		Whale Oil	Olive
Palmitic			Peanut
Stearic			

Table III

The following organic chemicals do not attack high density crosslinkable polyethylene resins. They will be absorbed into the wall of tank and a permeation loss will occur. Because of this permeation and the effect it has on the physical properties of the tank, it is generally not recommended that these chemicals be storage at room temperatures above 100° F. However, their use largely depends on such factors as size of tank, its location, toxicity of the chemical, and applicable codes such as NFPA, OSHA, etc.

Anitine
Benzene
Carbon Tetrachloride
Chlorabenzene
Cychohexanol
Cycolohexnone
Dibutylphthalate
Diesel Fuel
Dimethylamine
Ethyl Butyrate
Ethylene Chlorohydin
Fuel Oil
Fufural
Aliphatic Hydrocarbons (hexane, octane, hexene, octene, etc.)
Jet Fuel
Gasoline
Nitrobenzene
Octyl Cresol
Propylene Dichloride
Toluene
Xylene

This document reports accurate and reliable information to the best of our knowledge, but our suggestions and recommendations cannot be guaranteed because the conditions of use are beyond our control. Information presented herein is given without reference to any patent questions which may be encountered in use thereof. Such questions should be investigated by those using this information. Poly Processing Company assumes no responsibility for the use of information presented herein and hereby disclaims all liability in regard to such use.

OR-1000™ Tank Systems!

Specify Peace of Mind!

NSF/ANSI 61

- OR-1000™ Engineered System
- 4 Times Antioxidants
- Certified for 31+ Hazardous and Corrosive Chemical Applications
- Design Temperatures to 140°F
- Complies with State Regulations

Provide Longer Tank Life with an IMFO®/OR-1000™ System!

Increase Tank Longevity!

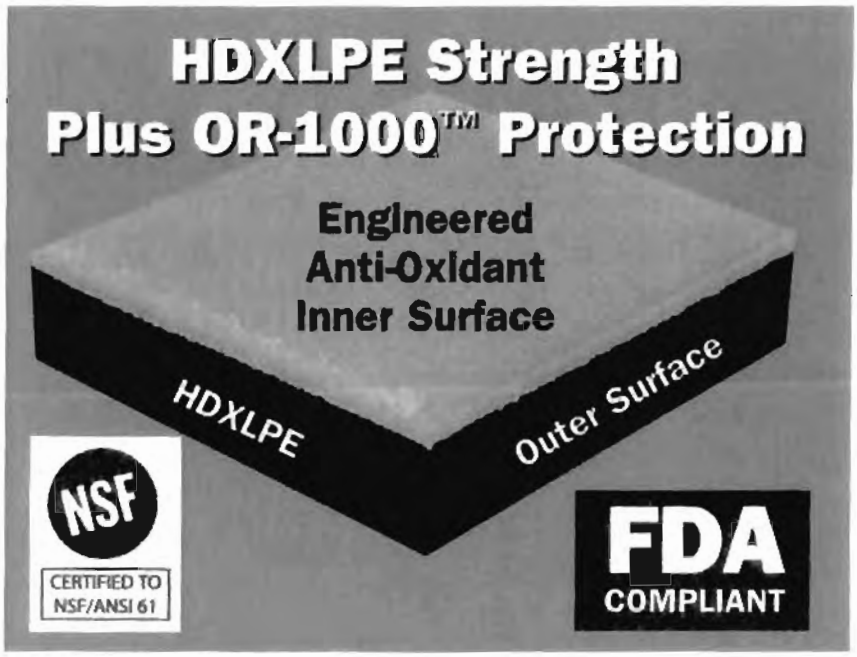

- **Proven System since 1995**
- **Increased Chemical Resistance**
- **Complete Drain**
- **Maintenance Free**
- **Avoids Confined-Space Entry**
- **4x Anti-Oxidant Package**
- **Sodium Hypochlorite/Sulfuric Acid/ Hydrochloric Acid applications***

*See warranty information on page 28

PROCESSING

Providing Solutions Through Innovation

Storage Solution: OR-1000 Liner

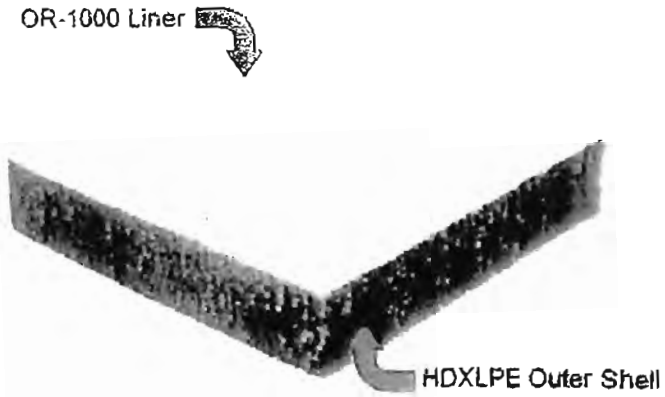

Poly Processing Company is the only rotational molding company with the ability to provide the strength, durability and safety of HDXLPE with the added value of an oxidation resistant liner, OR-1000, integrally molded as the interior surface of the part.

The liner thickness is in addition to the ASTM design thickness of the HDXLPE outer shell for the intended chemical application. This crosslink / OR-1000 combination has been successfully used for Sodium Hypochlorite and Sulfuric Acid services since 1995. To even further enhance the value of this combination, we are now adding this lining to the new high performance Metallocene High Density Crosslinked resin.

The reason for the OR-1000 material is simple. To develop the outstanding long-term properties of HDXLPE, the amount of anti-oxidants must be limited. Although HDXLPE has superior properties to any other rotational mold grade polyethylene, in a few highly oxidizing chemical applications, its optimum service life has not been obtained. To capitalize on the superior properties and performance characteristics of HDXLPE, the OR-1000 liner was developed to serve as an oxidation barrier to improve service life in oxidizing chemical applications. This combination provides unmatched performance and value to our customers.

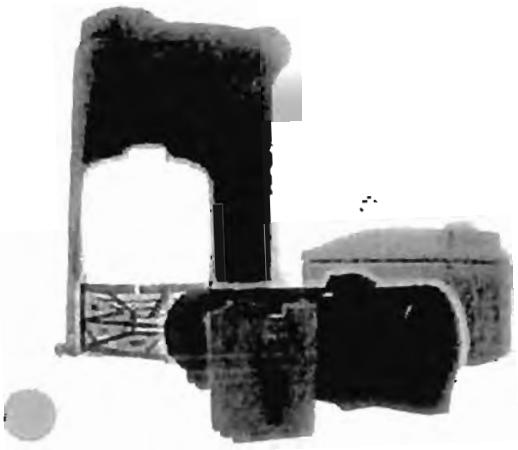

Sodium Hypochlorite and Sulfuric Acid remain very difficult storage and handling applications. However, we continue to bring you the very best in value, service and high performance products -- Poly Processing Company, *providing solutions through innovation.*

member

Authorized Distributor

member

1-866-590-6845

www.polyprocessing.com

PROCESSING

Providing Solutions Through Innovation

Polyethylene Tank Life Expectancy

For 35 years, Poly Processing Company has been **Helping Our Customers . . . Solve Problems** associated with storing hazardous chemicals, **Managing Risk** with the Environment and Employee Safety and **Growing Their Profits** with Increased Tank Longevity and Operating Efficiencies. We have specialized in providing hazardous chemical storage solutions to the industrial, water and waste water markets. While we manufacture both linear and crosslink polyethylene storage tanks; in **hazardous chemical environments, crosslink polyethylene** is the material of choice. Our customers report crosslink polyethylene tanks providing service for 10+ years with 15 to 20 years of tank service being common. However; there are many factors and variables that have an effect on the useful life of any tank including polyethylene.

Chemical, Concentration and Temperature: The chemical, concentration and operating temperature are all factors influencing the life expectancy of a polyethylene tank. For example, high concentrations of Sulfuric Acid are stress cracking agents and are more aggressive oxidizers than less concentrated chemicals such as 25% Caustic Soda. For this reason, Poly Processing offers our customers the OR-1000™ Anti-Oxidant Systems. Another example: 12% Sodium Hypochlorite will degrade from UV exposure and elevated temperatures. As it degrades, sediment builds in the bottom of the tank leading to a shorter tank life. To eliminate this sludge buildup, Poly Processing Company offers our customers the IMFO® (Integrally Molded Flanged Outlet). The IMFO® design promotes continuous "system" flushing increasing tank life and operating efficiencies. Poly Processing Company chemical storage tanks are constructed from premium materials and designed specifically for the chemical, concentration and temperature requirements.

Installation and Piping: The single biggest reason for tank life reduction is improper tank installation and **"hard"** piping. Polyethylene's broad spectrum of chemical resistance vs. other materials of construction is based on its ability to expand and contract. Flexible connections compensate for tank expansion and contraction promoting a longer useful life. It is important to follow Poly Processing Company's Installation Manual instructions during the installation process.

Venting: Often overlooked, venting is a very important step that promotes tank longevity. Polyethylene tanks are rated at atmospheric pressure/vacuum. Adequate vent size is always based on flow and delivery rates so it is important to gather the following information to adequately determine the proper venting requirements:

1) Is the tank to be filled pneumatically?
2) Is the tank to be vented to atmosphere?
3) Does the length of the vent exceed 3 feet (piped to a central vent system)
4) Is a fume scrubbing system to be used?
5) Are vent screens to be used (restricts flow)?
6) Does the tank manufacturer offer a method of "emergency venting" to prevent over-pressurization?

Other Items Effecting Tank Longevity:

1) Continuous cycling (fill / discharge)
2) Excessive agitation
3) Mobile applications

For further information about your specific needs or applications, please contact Poly Processing Company at 1-866-590-6845 or visit our website at www.polyprocessing.com.

POLYPROCESSING COMPANY

Providing Solutions Through Innovation

Chemical Resistance

Chemical Resistance

Chemical "resistance" and "compatibility" are synonymous terms used in relation to the ability of a plastic to function in different environments. In regards to polyethylene chemical storage tanks, chemical resistance encompasses the total effect a product would have on a tank. The factors that make up the overall compatibility of a chemical to a rotomolded tank are (1) chemical attack, (2) absorption or permeation, and (3) solubility and stress crack resistance.

Chemical Attack

By definition, chemical attack involves an actual chemical reaction with the plastic. This can be a breaking of molecular chains and/or an addition of chemical groups to the molecule. For example, in the case of an oxidation reaction with polyethylene, both occur with the addition of carbonyl groups. This causes and eventual loss of properties to the point that a tank would not be serviceable.

Polyethylene in general is one of the most inert plastics available. Very few chemicals react with polyethylene and with those that do, the rate is relatively slow. The ultra high molecular weight characteristics of high density crosslinked polyethylene resins after crosslinking makes these particular polyethylenes even more resistant than other grades.

Permeation

This involves the physical absorption of the chemical into the polyethylene. If this is a volatile chemical, then an actual loss of the product can occur as the chemical vaporizes from the outer wall of the tank. The amount of absorption is generally limited to 3 to 7 percent by weight of the polyethylene. Also, the loss of volatile products is relatively small. For example, a 25-gallon tank with a 50-mil wall will only lose between 5 and 6 grams of gasoline per day due to permeation. The thicker the wall, the lower the rate of loss.

The absorption of a product into the wall of a tank will cause more property changes. The tensile strength is reduced approximately 15 to 20 percent and stiffness approximately 20 percent. Normally, this does not affect the utility of a tank or prohibit the application. The property losses due to permeation are offset by increasing the design wall thickness of the tank.

Elevated Temperature

The effects of elevated temperature (100° F or greater) on polyethylene tank are predictable and expected. Polyethylene, which is a flexible material, becomes even more flexible when heated. It will, therefore, bulge more at an elevated temperature than at room temperature.

By looking at the design hoop stress values for various temperatures, one can see the effects of increased temperature services. The values remain relatively constant up to 100° F, after which they begin to decrease.

100° F	600 psi	130° F	450 psi
110° F	550 psi	140° F	400 psi
120° F	500 psi	150° F	300 psi

A rise in temperature of 50° F (100° F to 150° F) reduces the design hoop stress value from 600 psi to 300 psi and doubles the required wall thickness. It follows that simply increasing the service rating of a tank from 1.35 S.G. to 1.65 S.G., or even to 1.90 S.G. is not necessarily sufficient. The proper wall thickness must be calculated for the temperature of service.

The maximum temperature rating for crosslinked polyethylene material is 150° F. Above that temperature the thermal stabilizers in the plastic are more rapidly consumed. Continued use will cause embrittlement and a reduction in the useful life of the part. Temperature services from 100° F to 150° F are acceptable applications, however, thicker tank walls are required to maintain a safe design. Consult the factory when application such as these arise.

Crosslinked Polyethylene with OR-1000™ System
The #1 System for Oxidizing Chemical Environments

Poly Processing Company and other polyethylene tank manufacturers, as well as major polyethylene resin manufacturers have published many documents over the past several years discussing the benefits of certain rotational molding resins in acidic and alkaline chemical environments. The majority of these documents support the use of crosslinked polyethylene over linear polyethylene in acidic and basic chemical environments. These articles speak to the longevity of crosslinked polyethylene rotationally molded tanks, the safety of having polymer chains that are chemically bonded, and the leveraged investment of knowing that crosslinked polyethylene chemical storage tanks have been utilized for the last 35 years.

In 2001, one of the largest resin manufacturers in North America published a fairly extensive study which showed that their linear polyethylene in a lab environment performed as well as, if not better than crosslinked polyethylene, in acidic and alkaline chemical applications. This study, coupled with marketing efforts by linear polyethylene tank manufacturers who do not rotationally mold crosslinked polyethylene tanks in the course of their normal business, has given rise to some industry confusion and misunderstanding about what is the best resin system for storing oxidizing chemicals. We will summarize the facts about rotationally molded polyethylene storage tanks and the value of an engineered antioxidant resin system coupled with the long-term performance of crosslinked polyethylene.

We would first like to discuss the lab study performed by the linear resin manufacturer. The study compared crosslinked polyethylene with linear polyethylene in sulphuric acid and sodium hypochlorite environments. The sulphuric acid was concentrated approximately 93%-97%, and the Sodium Hypochlorite was around 14% concentration. The lab study describes how the crosslinked polyethylene and linear polyethylene were submersed in the chemicals and then tested using ARM Impact testing as well as Environmental Stress Crack Resistivity (ESCR) testing. The study concluded that the linear materials in a chemical resistivity mode held up as well as crosslinked materials in a lab environment. In addition, Higher ESCR properties are found in lower density materials like LLDPE or LDPE as compared to HDPE resins. It doesn't mean you want to use a tank made only from the lower density resins. ESCR shows how well the material performs in a pre-notched condition in the presence of certain chemicals.

The lab study performed by the resin manufacturer did not cover or discuss the long-term properties of these materials in harsh, environmental conditions. Over time, sodium hypochlorite and sulphuric acid create an oxidative environment, which remove hydrogen molecules from the polymer chains creating embrittlement. This phenomenon is inherent to all types of polyethylene, since they are hydrocarbon based molecules. Storing acids and bases in actual everyday environments presents a completely different set of parameters and stresses that have little to do with the lab environment.

Poly Processing Company has been aware of this relationship between ESCR and Chemical resistance for many years and has been an industry leader in creating engineered resin systems which give the end user the ability to have excellent oxidation and chemical resistivity without sacrificing long term performance and toughness. These engineered resin systems deliver peace of mind, a margin of safety, and leveraged investment to the end user.

Another critical factor to consider when storing acids and bases in actual everyday environments is the Long Term Hydrostatic Strength (LTHS) of the polyethylene. LTHS properties are one of the keys to providing the continued strength necessary for tanks during its service life. This property is especially important in field applications where tanks can see elevated temperatures approaching

140°F. LTHS tests are conducted at both ambient temperature (73°F) and at elevated temperature (140°F) since actual field conditions are typically in this range.
Figure 1.

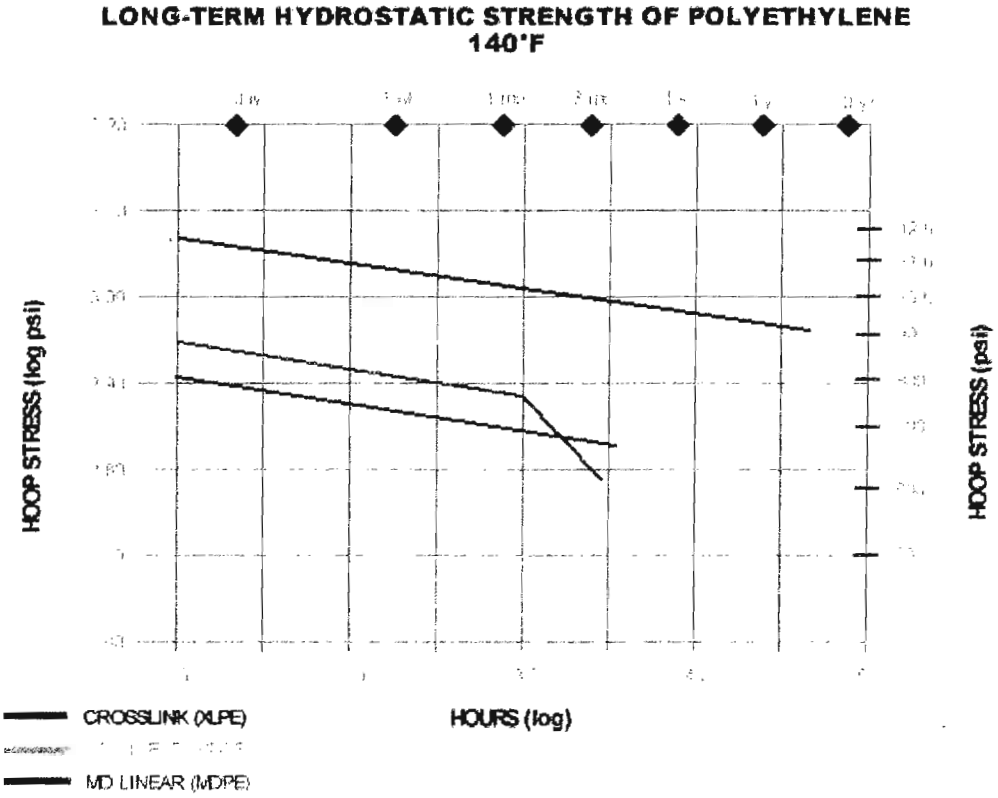

Source: Chevron Phillips Company, Plastics Technical Center

The rapid deterioration in properties is indicated by a "knee" in the curve of hoop strength versus time as illustrated in Figure 1 above. Even high performance HDPE will develop a LTHS knee at around 1000 hours (log 3), and some MDPE products will have a knee in less than 10,000 hours (log 5). This type of performance substantially reduces the expected long-term performance at elevated temperatures. Crosslinked polyethylene has been tested to 50,000 hours at 140°F and shows no signs of a knee.

There is still the need to surround the oxidation resistant material with a robust resin system that will give you longer useful tank life, superior impact resistance, and greater tensile strength for a safer product. That is why crosslinked polyethylene is still the material of choice for industrial and municipal chemical applications.

Poly Processing Company has been the leader in rotationally molded crosslinked polyethylene storage tanks for 35 years. We work with the leading universities in the country to develop engineered resin systems that will perform above and beyond any standard "off the shelf" polyethylene in harsh, oxidizing environments. One of the systems we developed is the OR-1000™ system. This system uses the best linear resin for chemical resistivity combined with four (4) times the antioxidant power and a crosslink outer wall for maximum long-term performance and durability.

Poly Processing Company developed the OR-1000™ oxidation resistance system in 1995. This lower density linear material serves to increase the service life of crosslinked polyethylene tanks in oxidizing chemical service (Sodium Hypochlorite, Sulphuric Acid, Hydrochloric Acid, and Nitric Acid). To develop the outstanding long-term physical properties of crosslinked polyethylene, the amount of antioxidant compounded into the material has to be limited. Although crosslinked polyethylene has superior properties to any other rotational molding grade polyethylene, the tank's useful service life will be reduced without the OR-1000™ system. In order to utilize the superior properties of crosslinked polyethylene, the OR-1000™ system was developed to greatly improve the service life in harsh oxidizing chemical environments. This material is a medium density linear based resin with a large amount of antioxidant added to it for the best oxidizing resistance system in the industry. The OR-1000™ system has been engineered to prevent de-lamination during the useful life of the tank.

To compare the effect of oxidizing chemicals on the OR-1000™ system and crosslinked polyethylene, 1/8" thick tensile bars of both OR-1000™ and crosslinked polyethylene were submerged in a manufacturer's storage tank. This tank handled a highly oxidizing chemical, 17% Sodium Hypochlorite, and was emptied and filled at least once a day. Every 30 days, samples were pulled and tensile and percent elongation was determined as well as ESCR tests. Oxidization or reduction in physical properties is indicated by reduced in elongation. After six months of testing, the elongation of the crosslinked polyethylene tensile bars had decreased 26% while OR-1000™ elongation had no change. This is due to the added antioxidant in the OR-1000™ system as well as the fact that the linear material used in the testing was a lower density material than the crosslinked material.

Crosslinked polyethylene provides superior environmental stress cracking resistance (ESCR) or sometimes generally referred to as resistance to slow crack growth (SCG) in almost all chemical applications. Two tests which clearly show this difference are the bent strip ESCR (ASTM D1693) with 10% Igepal where crosslink polyethylene does not fail in over 1000 hours compared to typical values for LMDPE of <400 hours. Another test which shows the slow crack growth difference with no surfactant (in air) is the polyethylene notch test (PENT) described in ASTM F 1473 and crosslink polyethylene again does not fail in over 1000 hours and LMDPE grades fail in <100 hours. Even though linear polyethylene grades with improved ESCR have become available over the past 10 to 15 years, they still do not match crosslinked polyethylene in SCG performance. Slow crack growth resistance as was shown earlier in this paper is an important property that can affect the long-term performance of tanks.

The best of both worlds is having the OR-1000™ system for the long-term oxidative resistivity characteristics (as discussed in the resin manufacturer's lab study), with the robustness of crosslinked polyethylene for the long-term durability and long useful life that is expected of industrial grade chemical storage tanks. This is why so many chemical manufacturers and distributors choose Poly Processing Company for engineered chemical storage solutions.

Crosslinked polyethylene tanks with the OR-1000™ system varying in sizes from 500 gallons to 14,950 gallons have been in true industrial and municipal use for over 10 years with excellent results. Poly Processing Company backs every crosslinked polyethylene tank with the OR-1000™ system with a 5 year full warranty on all suitable applications including sodium hypochlorite and hydrochloric acid, sulfuric acid 80%-98% carries a full 3 year warranty

Store your harsh oxidizing chemicals with the confidence and peace of mind that you deserve. Specify Poly Processing Company's crosslinked polyethylene tanks with the OR-1000™ system for longevity, safety, and leveraged investment. Please consult your distributor or Poly Processing Company at 1-866-590-6845 for your specific requirements.

tobeywade
STRUCTURAL ENGINEERS

October 2, 2009
Project No. R115-07-08

Mr. Aubry Burgess, Maintenance Supervisor
PHILIP SERVICES CORPORATION
ENVIRONMENTAL SERVICES DIVISION
2095 Newlands Drive East
Fernley, NV 89408

RE: TANK 102 CERTIFICATION REPORT

Dear Mr. Burgess:

In accordance with the Fernley Facility Amended Tank Replacement plan as prepared by Philip Services Corporation (PSC) and dated March 25, 2008. each tank is required to be certified by Independent Registered Professional Engineers (IRPE's) prior to being placed into service. This letter has been prepared to document the evaluations as performed by Tobey-Wade Consulting

Background

Tank 102 is a Crosslinked Polyethethylene Tank with a 6,250 gallon capacity as manufactured by Poly Processing Company. Poly Processing has provided data relative to the tank's strength and its chemical resistance capabilities. Poly Processing has also provided an opinion as to any offsets observed in the tank shell.

Schiff Associates has evaluated the tank's suitability and compatibility for its proposed use in PSC's facility. Their conclusions have been provided under separate cover to PSC.

Findings

Based on our research, analysis and structural observations, the following systems are hereby certified as being in compliance with the Amended Tank Replacement plan:

- Tank 102 is situated on a reinforced concrete foundation system which is capable of adequately supporting the tank and its contents under static and dynamic conditions.
- Tank 102 is located in an area with sufficient secondary containment as required by 40 CFR Ch. I, 264.193.
- Tank 102 is stabile against overturning when subjected to loads based on 2006 International Building Code level seismic events.

ADDITION DATE 10/09/09
REVISION NUMBER 1

329 FLINT STREET ▪ RENO, NEVADA 89501 ▪ TEL (775) 324.7757 ▪ FAX (775) 324.7797

- Tank 102 is anchored to prevent sliding when subjected to loads based on 2006 International Building Code (IBC) level seismic events. Structural Observation and Special Inspection of the anchorage system has been performed as required by the IBC. The Structural Observation and Special Inspection reports are attached.

- Tank 102 has been tested for leakage and found to be watertight. The Tank Leakage Test report is attached.

- The exterior of Tank 102's shell wall has been inspected and found to be generally undamaged. The Tank Shell Inspection report is attached.

Structural Observation, tank leakage inspections and tank shell inspections were performed by Tobey-Wade Consulting under my direct supervision. Special Inspections were performed by ICC-certified inspectors from Black Eagle Consulting based on anchorage requirements provided by Tobey-Wade Consulting.

Certification Statement

I certify under penalty of law that this report and all attachments were prepared under my direction and supervision in accordance with a system developed to assure that qualified personnel properly gather and evaluate the information submitted. Based on my inquiry of the person or persons who manage the system or those persons directly responsible for gathering the information, the information submitted is, to the best of my knowledge and belief, true, accurate, and complete. I am aware that there are significant penalties for submitting false information, including the possibility of fines and imprisonment for knowing violations.

This report has been prepared in accordance with acceptable engineering practices and is subject to the assumptions and limitations stated in the report. Also note that this certification covers the aforementioned aspects of Tank 102 only.

Please feel free to contact me at your convenience should you have any questions relating to our findings.

Sincerely,
TOBEY-WADE CONSULTING

Terrence R. Tobey

Terrence R. Tobey, S.E.
Principal Structural Engineer

Exp.
6-30-10

ADDITION DATE 10/09/09
REVISION NUMBER 1

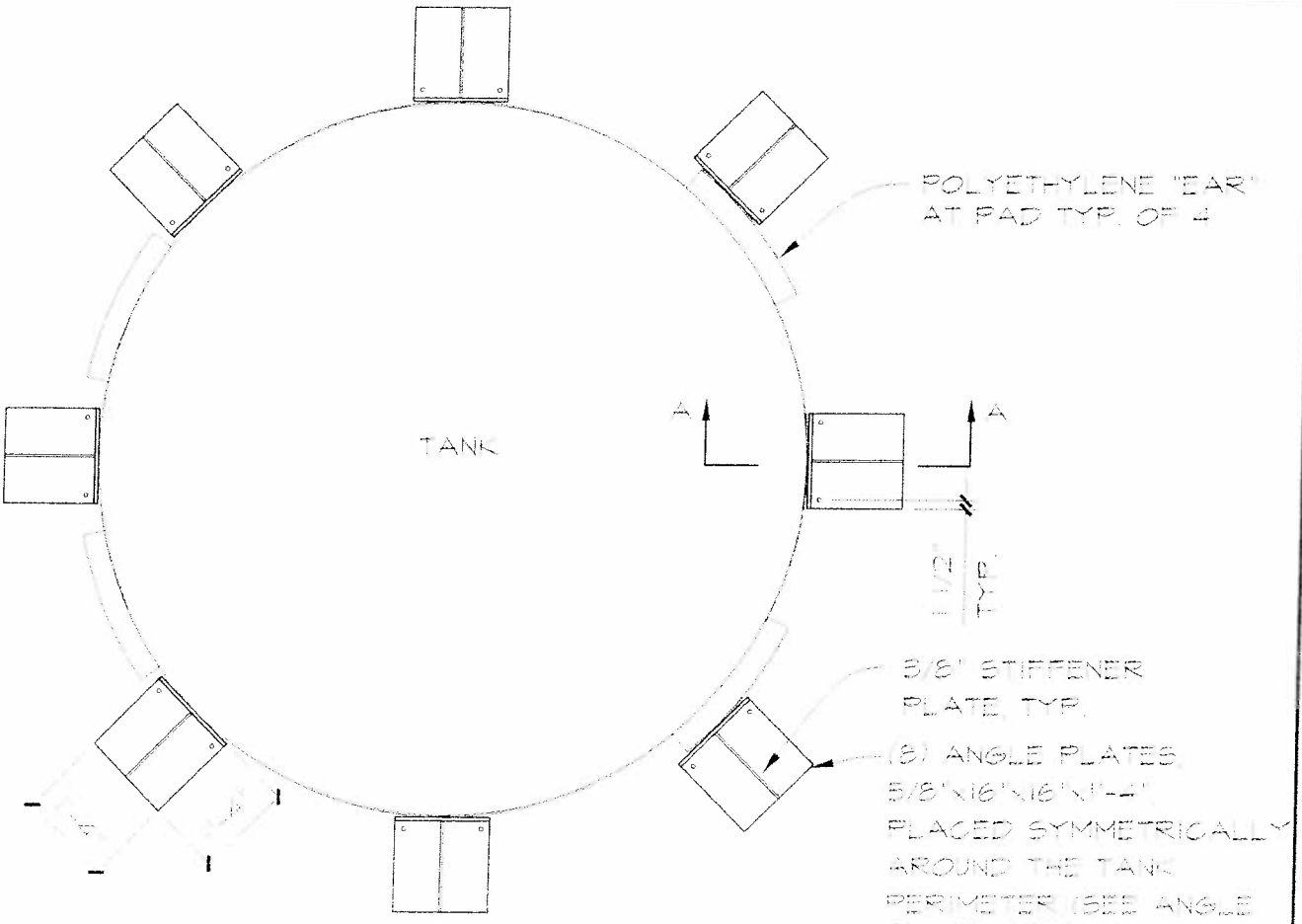

TANK NO's 101-103 & 105-106
CYLINDRICAL FLAT BOTTOM TANK

SCALE: 3/8"=1'-0"

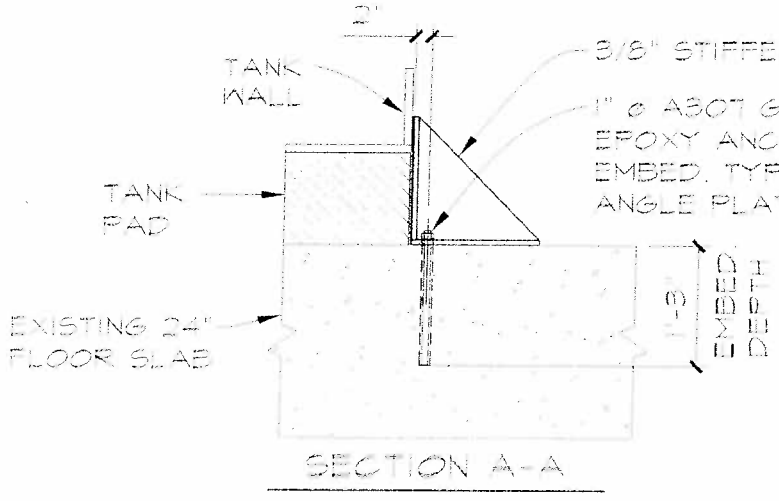

SECTION A-A

N.T.S.

"AS-BUILT" DRAWING DATED OCT 5 2009

tobey wade
CONSULTING

329 Flint Street
Reno, Nevada 89501
Tel. (775) 324-7757 Fax (775) 324-7797

PHILIP SERVICES CORPORATION
FERNLEY FACILITY

TANK NO's 101-103 & 105-106
AS-BUILT ANCHORAGE DETAILS

FERNLEY, NEVADA

Project No.
R115-07-08

ADDITION DATE 10/09/08

REVISION NUMBER 1 Date OCT. 1, 2008

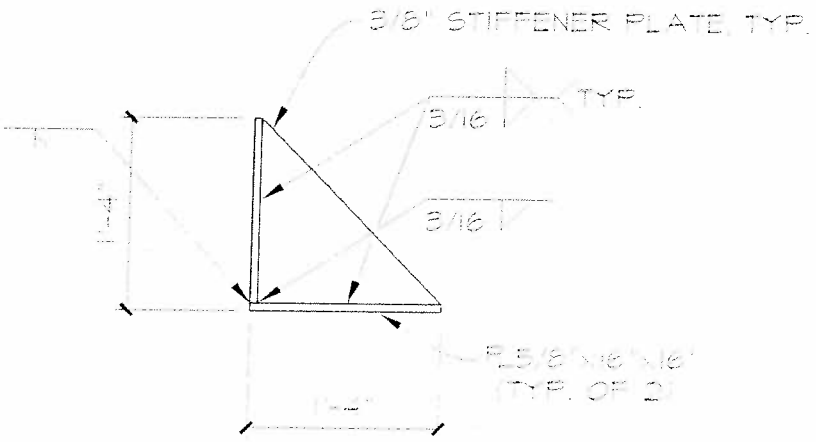

ANGLE PLATE DETAIL

SCALE: 3/4"=1'-0"

AS-BUILT DRAWING
DATED OCT 5 2009

tobey **wade**
CONSULTING
329 Flint Street
Reno, Nevada 89501
Tel. (775) 324-7757 Fax (775) 324-7797

PHILIP SERVICES CORPORATION
FERNLEY FACILITY

TANK NO's 101-103 & 105-106
AS-BUILT ANCHORAGE DETAILS

FERNLEY, NEVADA

Project No.
R115-07-08

ADDITION DATE 10/09/09

Date: OCT. 1, 2008

REVISION NUMBER 1

NON-CONTROLLED COPY
INFORMATION SUBJECT TO CHANGE WITHOUT NOTICE
VERIFY REV LEVEL OF PAPER COPY WITH REV LEVEL ON PPC WEB SITE

Proposed Storage Tank

A MOLDED-IN LIFTING LUG PAIRS : (4) PLACES
USE MINIMUM OF (1) LUG AT EACH LOCATION FOR LIFTING (SEE DETAIL)

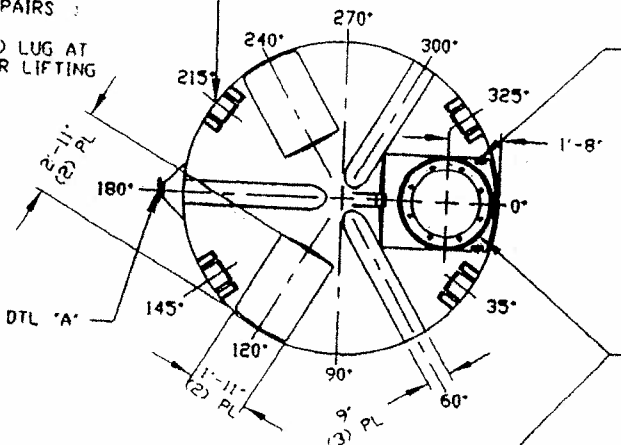

MOLDED-IN LADDER ATTACHMENT LUG TYP (2) PLACES

STANDARD COVER:
24"/(8) BOLT MANWAY COVER/PE (SHOWN)
PPC STOCK NO. 3218 OR
24"/STRAPPED MANWAY COVER/PE B
PPC STOCK NO. 3217
(OPTIONAL 24" COVERS AVAILABLE)

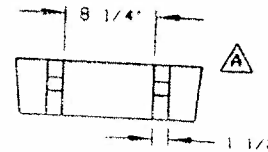

LIFTING LUG DETAIL
(4) PLACES
SCALE: 1"=1'-0"

NOZZLE SCHEDULE & ACCESSORIES

SERVICE	MK	STOCK NO.	SIZE	FITTING	DEG	ELEV

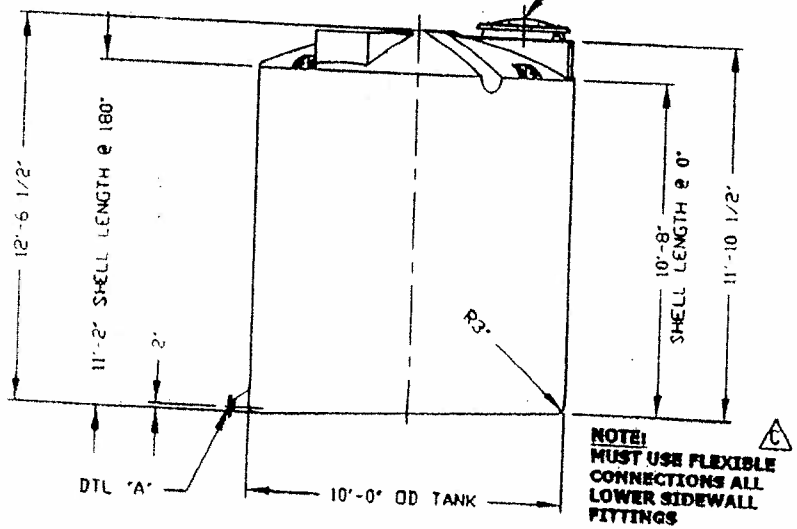

C NOTE:
MUST USE FLEXIBLE CONNECTIONS ALL LOWER SIDEWALL FITTINGS

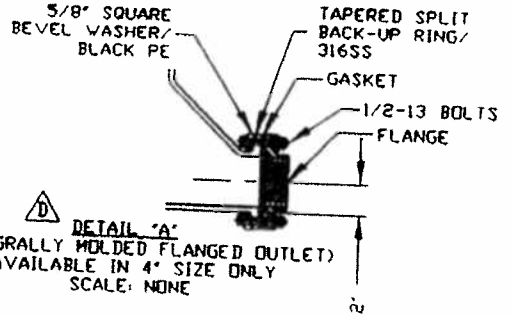

D DETAIL "A"
(INTEGRALLY MOLDED FLANGED OUTLET)
AVAILABLE IN 4" SIZE ONLY
SCALE: NONE

NOTES
1. THIS IS A COMPUTER GENERATED DWG. DO NOT REVISE BY HAND.
2. DIMENSIONS WILL VARY ±3% DUE TO VARIATIONS IN MULTIPLE MOLDS & CONDITIONS PREVALENT DURING MANUFACTURE & USAGE.
3. NO MOLDED IN GALLONAGE MARKERS THIS TANK.

CALCULATED CAPACITIES/ VOLUME IN U.S. GALLONS		
DESIGN CAP	DOME VOL	TOTAL VOL
6283	470	6753

CONFIDENTIAL PROPERTY OF POLY PROCESSING COMPANY
NOT FOR REPRINT OR USE WITHOUT PERMISSION

DWG TITLE
6250 GALLON SLOPE BOTTOM IMFO TANK

SCALE: 1/4"=1'-0"
DATE: 3/17/00
PolyProcessing COMPANY
Western Region
DR MB WILKERSON
CK D. RECTOR
SHEET 1 OF 1
COMPUTER FILE 11206250
REV E

REV "E" REVISED FOR MOLD MODIFICATIONS BY:JB 6/16/033 CK:VM
REV "D" REVISED IMFO STYLE BY:JB 4/30/03 CK:VM
REV "C" ADDED FITTING NOTE BY:JB 3/3/02 CK:MBW
REV "B" REVISED STOCK NUMBER BY:JB 3/3/02 CK:MBW
REV "A" ADDED LIFTING LUGS & DETAIL BY:JB 10/31/02 CK:VM

REVISION NUMBER 1 ADDITION DATE 10/09/09

POLYPROCESSING
COMPANY, LLC

January 21, 2009

Aubry Burgess
Phillips Services
2095 Newlands Dr. E.
Fernley, NV 89408

Re: Tank with serial number C0802026 - 6250 gallon slope bottom tank

Dear Aubry,

Thank you for sending the pictures to show us what the concerns are with the tank referenced above.

I understand that there is some concern in regards to the appearance of the offset parting lines. The offset is what we refer to as a "witness line". This is where the pieces of the mold are bolted together in preparation of manufacturing the polyethylene part. If you look inside the tank you will see that it is a homogenous part with no lines. This offset will not affect the integrity, warranty or service life of the tank.

In addition there was some concern about a gouge in the wall of the tank. In looking at the picture this appears to be on the surface only and will not affect the integrity, warranty or service life of the tank. I am including a typical wall thickness chart for the tank so you can see that this is not deep enough to be a concern. If you want to sand the area of the gouge you can do so.

Please give us a call if there is anything else you need.

Sincerely,

Patti Burch
Poly Processing Company
Technical Support
PB/pb

ADDITION DATE 10/09/09
REVISION NUMBER 1

TANK INSPECTION FORM

Philip Services Corporation / 21 EMI
PSC Fernley Facility
2095 Newlands Drive East
Fernley, NV 89408
(775)575-2760

TANK NO.: 102

TANK SHELL INSPECTION

Date Inspected: Feb. 20, 2009

Findings: No scrapes, gouges or nicks. (3/8" offset at lower course, similar to other tanks - ok)

TANK ANCHORAGE STRUCTURAL OBSERVATION

Type of Anchorage System: Typical steel anchor plate

Date Inspected: Feb. 20, 2009

# of Anchor Plates: 8

AB Type and Diameter: 1 inch diameter

Plate Contact with Tank: Yes (within .5 inch at the top of the steel anchor plate)

Special Inspection Completed? Yes (see Black Eagle Inspection reports)

TANK LEAKAGE TEST

Date Filled: Feb. 19, 2009 Water Level below Inspection Hatch: 24.5" +/-

Date of Re-inspection: Feb. 20, 2009 Water Level below Inspection Hatch: 24.5"

Shell Leakage? No (rust colored stains at the top fitting but fitting has never been used per PSC)

Leakage on Floor/Drain Pan at Manifold?

No water present in the drain pan but the floor is damp due to wash-down after drilling AB holes.

INSPECTOR: _____ **DATE:** _____

INSPECTOR: Terrence Tobey **DATE:** 2.20.09

ADDITION DATE 10/09/09

REVISION NUMBER 1

SPECIAL INSPECTOR DAILY REPORT

BLACK EAGLE CONSULTING, INC.
GEOTECHNICAL AND CONSTRUCTION SERVICES
1345 Capital Blvd., Suite A, Reno, Nevada 89502-7140
Phone (775) 359-6600 Fax (775) 359-7766

Project: PSC Tank Anchors	Project No.: 560 02-1	Date: 2-9-09
Client: PSC	Contact: Aubrey	Total Hrs.: 2
Location: Fernley	Weather:	Temp.:
Contractor: In house	Contact: Aubrey	Stand By Hrs.:

Equipment in use:

Describe Inspections Made, Including Locations: Shop - weld inspection of 48 plate assembly tank anchors for six tanks # 101, 102, 103, 105, 106 & 107. Welds are visually acceptable to AWS D1.1 and are of the proper size type length and location as per approved plans.
Process, equipment and consumables comply with AWS D1.1

List Tests Made:

List Items Requiring Correction, Corrections of Previously Listed Items, and Previously Listed Uncorrected Items:

List Changes to Approved Plans Authorized by the Building Official and Architect or Engineer:

Comments:

Signed: Robert Rodden Date: 2-9-09

Print Full Name: ROBERT RODDEN I.D. Number: 5259600

Reviewed By: rmk Date

White to *Office* Canary to *Field File* Green to *Personal File*

cc:

QA/QC SIDR # 4
ADDITION DATE 10/09/09
REVISION NUMBER 1

SPECIAL INSPECTOR DAILY REPORT

Page ___ of ___

BLACK EAGLE CONSULTING, INC.
GEOTECHNICAL AND CONSTRUCTION SERVICES
1345 Capital Blvd., Suite A, Reno, Nevada 89502-7140
Phone (775) 359-6600 Fax (775) 359-7766

Project: Tank Anchors	Project No.: 560 02-1	Date: 2-19-09
Client: PSC	Contact: Aubry	Total Hrs.: 4
Location: Fernley	Weather: fair	Temp.:
Contractor: In-house	Contact: Aubry	Stand By Hrs.:

Equipment in use: _____

Describe Inspections Made, Including Locations: Shop - observed epoxy installation of 80 1" dia ASTM A307 grade C all thread 18" long into 1 1/8" dia. 15" deep rotohammered holes using standard and carbide bits, that were then brushed and blown clean. Each tank has 8 anchor plates equally spaced around tanks 101, 102, 103, 105 & 106, with two all threads embeded at each plate.
Epoxy is Simpson Set-XP and was applied as per manufacturer specs.

List Tests Made: _____

List Items Requiring Correction, Corrections of Previously Listed Items, and Previously Listed Uncorrected Items:

List Changes to Approved Plans Authorized by the Building Official and Architect or Engineer: _____

Comments: _____

Signed: [signature] Date: 2-19-09

Print Full Name: ROBERT RODDEN I.D. Number: 5259600

Reviewed By: [signature] Date: _____

White to *Office* Canary to *Field File* Green to *Personal File*
cc:

ADDITION DATE 10/09/09
QA/QC SIDR # 4
REVISION NUMBER 1

SPECIAL INSPECTOR DAILY REPORT

BLACK EAGLE CONSULTING, INC.
GEOTECHNICAL AND CONSTRUCTION SERVICES
1345 Capital Blvd., Suite A, Reno, Nevada 89502-7140
Phone (775) 359-6600 Fax (775) 359-7766

PROJECT:	PSC	**PROJECT #:**	560-02-1	**DATE:**	2/23/2009
CLIENT:	PSC	**CONTACT:**	AUBRY	**TOTAL HRS.:**	2.5
LOCATION:	FERNLY, NV	**WEATHER:**	OVERCAST AND COOL	**TEMP:**	50'S
CONTRACTOR:	PSC	**CONTACT:**	AUBRY	**STAND BY HRS.:**	N/A

EQUIPMENT IN USE: CARPENTER CREW

DESCRIBE INSPECTIONS MADE, INCLUDING LOCATIONS:

ARRIVED ON SITE TO PROVIDE OBSERVATION, TESTING, AND INSPECTION FOR HIGH STRENGTH BOLTING FOR STAINLESS STEEL 1" DIAMETER ALL THREAD CONNECTIONS. UPON ARRIVAL OBSERVED ALL CONNECTIONS HAD BEEN COMPLETED AND WERE READY FOR TORQUE/TENSION TESTING. OBSERVED EIGHT (8) PIECES OF ANGLE IRON WERE PLACED AROUND THE BASE OF EACH STORAGE CONTAINER WITH TWO (2) BOLTS PER CONNECTION. PERFORMED TORQUE/TENSION TESTING USING A CALIBRATED WRENCH SET FOR 300LBS. PERFORMED TORQUE/TENSIONING TESTING FOR >/= 50% OF THE CONNECTIONS FOR THE 1" DIAMETER ALL THREADS FOR STORAGE CONTAINERS # 101, 102, 103, 105, & 106. OBSERVED ALL CONNECTIONS TESTED MET OR EXCEEDED THE REQUIRED SPECIFICATIONS WITH NO DEFICIENCIES NOTED. INFORMED CONTRACTOR OF RESULTS AND OBSERVATIONS AND

LIST TESTS MADE:

PERFORMED TORQUE/TENSIONING TESTING FOR >/= 50% OF THE CONNECTIONS FOR 1" DIAMETER ALL THREADS FOR STORAGE CONTAINERS # 101, 102, 103, 105, & 106. PERFORMED TESTING TO 300LBS AS SPECIFIED.

LIST ITEMS REQUIRING CORRECTION, CORRECTIONS OF PREVIOUSLY LISTED ITEMS, AND PREVIOUSLY LISTED UNCORRECTED ITEMS:

N/A

LIST CHANGES TO THE APPROVED PLANS AUTHORIZED BY THE BUILDING OFFICIAL AND ARCHITECT OR ENGINEER:

N/A

SIGNED: _____ DATE: 2/23/2009

PRINT FULL NAME: MICHAEL SIMMONS I.D. NUMBER: 1084885-49/84

mrd

ADDITION DATE 10/09/09

REVISION NUMBER 1

TANK DATA SHEET

RCRA-Regulated? **YES**

Tank Location: **Tank Storage Bay - Acid Area**

Tank Name: **Waste Acid Storage**

Tank Numbers: **#101 - #111**

Process Description: **Acid Storage**

Vessel Fluid: **Waste Acid Mixtures**

Specific Gravity: **≤ 1.90**

Normal Operating Pressure (psig): **Atmospheric**

Freeboard At Working Vol (ft): **6" + dome top**

Temperature (°F): **Ambient**

	Material	Thickness	Type
Bottom	**Cross-link Polyethylene**	**5/8" nominal**	**Flat, Sloped**
Shell	**Cross-link Polyethylene**	**Varies .40" - .90" top to bottom**	**Cylindrical**
Top	**Cross-link Polyethylene**	**Design Avg. .40"**	**Domed Roof**

Working Volume (USG): **6000**

Nominal Volume (USG): **6280**

Tank O.D. (ft): **10' - 0"**

Design Code Used: **ASTM D1998**

Insulation: **None**

Method of Construction: **Rotationally Molded**

Tank Height or Length (ft): **12' – 6 1/2"**

Date in Service: **2009**

Anchorage: **Seismic restraints bolted to concrete. Anchorage designs per 2006 IBC.**

Connections

Item No.	Size (In.)	Gasket	Description
1	**24"**		**Roof manway / E-vent**
2	**4"**		**Vent fitting to Scrubber**
3	**3"**		**Tank Fill fitting**
4	**2"**		**Level Sensor Connection**
5	**4"**		**Flange Drain fitting**
6			**Lifting Lugs**
7			
8			
9			
10			
11			
12			
13			
14			
15			

Tank Mfgr: **Poly Processing Co.**

Remarks: **Poly Processing stock #1206250. Tank manufactured of hi-density cross-linked rotationally molded polyethylene with "Extra heavy wall thickness" for 1.9 sp. gr. service. Tank includes OR-1000 oxidation resistant liner.**

Tank Sketch

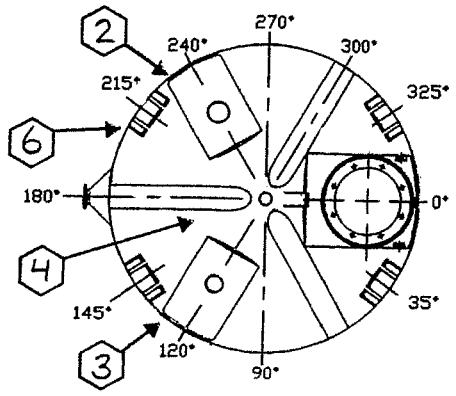

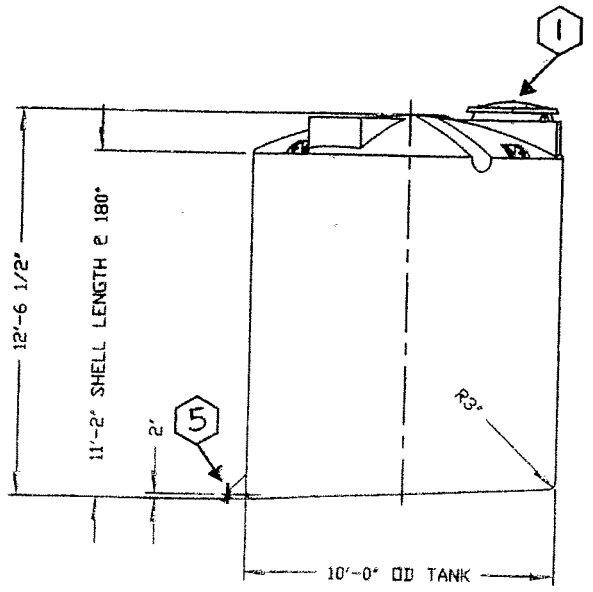

SCHIFF ASSOCIATES

gbell@schiffassociates.com

www.schiffassociates.com
Consulting Corrosion Engineers – Since 1959

October 5, 2009

via email to: Burgess, Aubry [ABurgess@pscnow.com]

PSC ENVIRONMENTAL SERVICES
2095 Newlands Drive E
Fernley, NV 89408

Attention: Mr. Aubry Burgess
Maintenance Supervisor

Re: Material Compatibility/Corrosion Certification Letter for
Tank 103 for Acid Storage
Amended Tank Replacement Plan
Fernley, NV
SA#08-1383LGL

Dear Mr. Burgess:

We have conducted the following investigations and research relative to the suitability and compatibility of the 6,250 Gallon slope bottom High Density Polyethylene (HDPE) tanks fabricated by PolyProcessing with OR-1000™ lining system for pre-treatment acid storage for typical inlet temperatures of less than 100°F and up to 140°F depending on concentrations and specific design conditions. Per the attached information, "*The maximum temperature rating for crosslinked polyethylene material is 150° F. Above that temperature the thermal stabilizers in the plastic are more rapidly consumed. Continued use will cause embrittlement and a reduction in the useful life of the part. Temperature services from 100° F to 150° F are acceptable applications, however, thicker tank walls are required to maintain a safe design.*"

1) Reviewed PolyProcessing Company's product information provided on tank design and compatibility.

2) Conducted independent research on compatibility of HDPE and polyethylenes with acids as a function of temperature.

3) Visited the PSC facility in Fernley in December 2008 to understand the anticipated process flow and conditions of waste streams at the site.

4) Reviewed supplemental information requested from PolyProcessing Company regarding issues identified during site visit.

1489 W. Warm Springs Road #110 · Henderson, NV 89014
Phone: 702.966.8266 · Fax: 702.946.6767

ADDITION DATE 10/09/09
REVISION NUMBER 1

The tank design is suitable for acid storage per the manufacturer's information in the position as Tank 103 in the waste processing stream of the PSC Facility as configured and intended per the Amended Tank Replacement Program outlined in the letter from Thomas Nelson of PSC to Nevada Division of Environmental Protection dated March 25, 2008.

CERTIFICATION

I certify under penalty of law that this document and all attachments were prepared under my direction or supervision according to a system designed to assure that qualified personnel properly gather and evaluate the information submitted. Based on my inquiry of the person or persons who manage the system, or those persons directly for gathering the information, the information submitted is, to the best of my knowledge and belief, true, accurate, and complete. I am aware that there are significant penalties for submitting false information, including the possibility of fine and imprisonment for knowing violations.

CLOSURE

Our services have been performed with the usual thoroughness and competence of the engineering profession. No other warranty or representation, either expressed or implied, is included or intended.

Sincerely,
SCHIFF ASSOCIATES

GRAHAM E.C. BELL
EXP: 12-31-10
MECHANICAL

Graham E.C. Bell, PE
Principal Engineer
NACE International Corrosion Specialist #5350

Attachments: Proposed Storage Tank Drawing
Waste Information Provided by PSC on PolyProcessing Data Sheet
PolyProcessing Technical Bulletin, Chemical Resistance Technical Information
OR-1000 Tank Cut Sheet
OR-1000 Cut Sheet
OR-1000 Product Sheet
PolyProcessing Polyethylene Tank Life Expectancy
PolyProcessing Chemical Compatibility Data including Temperature Dependence
PolyProcessing Technical Bulletin, Crosslinked Polyethylene with OR-1000™ System, Dated June 2005, Rev. A

ADDITION DATE 10/09/09
REVISION NUMBER 1

NON-CONTROLLED COPY
INFORMATION SUBJECT TO CHANGE WITHOUT NOTICE
VERIFY REV LEVEL OF PAPER COPY WITH REV LEVEL ON PPC WEB SITE

Proposed Storage Tank

(A) MOLDED-IN LIFTING LUG PAIRS (4) PLACES
USE MINIMUM OF (1) LUG AT EACH LOCATION FOR LIFTING (SEE DETAIL)

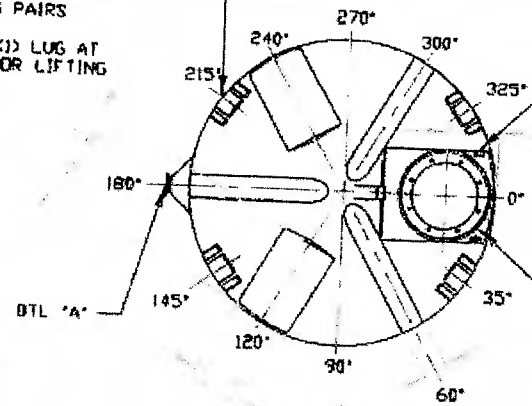

MOLDED-IN LADDER ATTACHMENT LUG TYP (2) PLACES

NOZZLE SCHEDULE & ACCESSORIES

SERVICE	MK	STOCK NO.	SIZE	FITTING	DEG	ELEV

(A)

LIFTING LUG DETAIL
(4) PLACES
SCALE: 1"=1'-0"

STANDARD COVER:
24"/(8) BOLT MANWAY COVER/PE (SHOWN)
PPC STOCK NO. 3218 OR
24"/STRAPPED MANWAY COVER/PE (B)
PPC STOCK NO. 3217
(OPTIONAL 24" COVERS AVAILABLE)

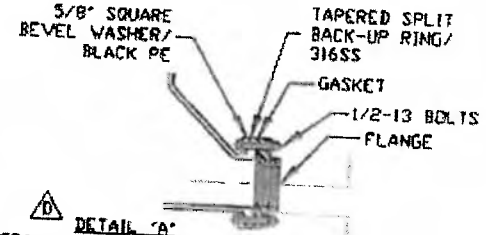

(D) DETAIL "A"
(INTEGRALLY MOLDED FLANGED OUTLET)
AVAILABLE IN 4" SIZE ONLY
SCALE: NONE

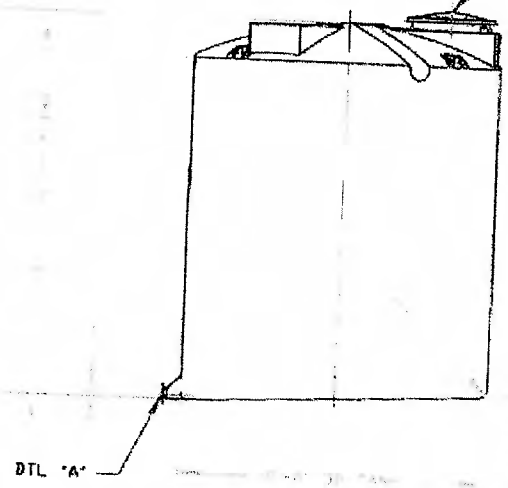

(C) NOTE:
MUST USE FLEXIBLE CONNECTIONS ALL LOWER SIDEWALL FITTINGS

NOTES
1. THIS IS A COMPUTER GENERATED DWG. DO NOT REVISE BY HAND.
2. DIMENSIONS WILL VARY ±3% DUE TO VARIATIONS IN MULTIPLE MOLDS & CONDITIONS PREVALENT DURING MANUFACTURE & USAGE.
3. NO MOLDED IN GALLONAGE MARKERS THIS TANK.

CALCULATED CAPACITIES/ VOLUME IN U.S. GALLONS		
DESIGN CAP.	DOME VOL.	TOTAL VOL.
6283	470	6753

CONFIDENTIAL PROPERTY OF POLY PROCESSING COMPANY
NOT FOR REPRINT OR USE WITHOUT PERMISSION

REV "E" REVISED FOR MOLD MODIFICATIONS BY:JB 6/16/03 CK:VM
REV "D" REVISED INFO STYLE BY:JB 4/30/03 CK:VM
REV "C" ADDED FITTING NOTE BY:JB 3/3/02 CK:MBW
REV "B" REVISED STOCK NUMBER BY:JB 3/3/02 CK:MBW
REV "A" ADDED LIFTING LUGS & DETAIL BY:JB 10/31/02 CK:VM

DWG TITLE: 6250 GALLON SLOPE BOTTOM IMFO TANK

SCALE: 1/4"=1'-0"
DATE: 3/17/00
POLY PROCESSING COMPANY — Western Region
DR: MB WILKERSON
CK: D. RECTOR

SHEET	COMPUTER FILE	REV
1 OF 1	11206250	E

Table I

The following chemicals do not attack or permeate high density crosslinkable polyetnylene resins up to 100° F. Each application should be considered individually. All concentrations apply except where noted.

Acetic Acid <1%
Aluminum Salts
Alum
Ammonium Hydroxide
Ammonium Salts
Amyl Alcohol
Antimony Salts
Arsenic Acid
Barium Hydroxide
Benzene Sulfonic Acid <1%
Bismuth Salts
Boric Acid <4%
Bromic Acid <10%
Butanediol
Butyl Alcohol
Calcium Hydroxide
Calcium Salts
Chromic Acid<50%
Citric Acid <1%
Copper Salts
Detergents
Diazo Salts
Diethyl Carbonate
Diethanol Amine
Diethylene Glycol
Diglycolic Acid
Dimethylamine
Dimethyl Formamide
Ethyl Alcohol
Ethylene Glycol
Ferric Salts
Ferrous Salts
Fluoboric Acid <5%
Fluosilicic Acid
Formic Acid <1%
Gallic Acid
Gluconic Acid
Hexanol
Hydrazone<35%
Hydrozine Hydrochloride
Hydriodic Acid
Hydrobromic Acid
Hydrochloric Acid
Hydrofluoric Acid <2%
Hydrofluorosilicic Acid <3%
Hydrogen Peroxide<52%
Hydrogen Phosphide
Hydroquinone
Hypochorous Acid
Iodine Solutions
Lactic Acid
Latex
Lead Acetate
Magnesium Salts
Mercuric Salts
Mercurous Salts
Mercury
Methyl Alcohol
Methylsulfuric Acid
Michel Salts
Nicotinic Acid
Nitric Acid<50%
Oxalic Acid <1%
Perchloric Acid <1%
Phenol<10%
Potassium Hydroxide
Potassium Salts
Phosphoric Acid
Photographic Solutions
Propyl Alcohol
Propylene Glycol
Sea Water
Selenic Acid <1%
Sewage
Silicic Acid
Silver Salts
Soap Solutions
Sodium Ferricyanide
Sodium Ferrocyanide
Sodium Hydroxide
Sodium Hypochlorite<9%
Sodium Salts
Sodium Sulfonates
Stanic Salts
Stannous Salts
Starch Solutions
Stearic Acid
Sulfuric Acid <80%
Sulfurous Acid
Sugar Solution
Glucose
Lactose
Sucrose, etc.
Tannic Acid
Tanning Extracts
Tartaric Acid
Titinium Acid
Toluene Sulfonic Acid
Triethanolamine
Urea
Vinegar
Wetting Agents
Zinc Salts

[1] Concentrate is above stated percentage, require special consideration, contact factory for guidelines concerning these applications.

Table II

The following oils and organic chemicals do not attack HDXLPE resins. They will be absorbed into the wall of the tank; however, there should be no loss of chemical. Because of this absorption, no chemical other than the original should be stored in the tank as long as contamination may result as the absorbed oil is leached out. Storage at temperatures up to 100° F are possible provided the effects of the absorption on the properties of the tank are not prohibitive.

Fatty Acids
Butyric
Lauric
Linoleic
Oleic
Palmitic
Stearic

Mineral Oils
Lube
Transformer
Hydraulic

Animal Fats
Lard
Fish Oil
Musk Oil
Whale Oil

Vegetable Oil
Corn
Coconut
Cottonseed
Olive
Peanut

Table III

The following organic chemicals do not attack high density crosslinkable polyethylene resins. They will be absorbed into the wall of tank and a permeation loss will occur. Because of this permeation and the effect it has on the physical properties of the tank, it is generally not recommended that these chemicals be storage at room temperatures above 100° F. However, their use largely depends on such factors as size of tank, its location, toxicity of the chemical and applicable codes such as NFPA, OSHA, etc.

Aniline
Benzene
Carbon Tetrachloride
Chlorobenzene
Cyclohexanol
Cyclohexnone
Dibutylphthalate
Diesel Fuel
Dimethylamine
Ethyl Butyrate
Ethylene Chlorohydin
Fuel Oil
Furfural
Aliphatic Hydrocarbons (hexane, octane, hexene, octene, etc.)
Jet Fuel
Gasoline
Nitrobenzene
Octyl Cresol
Propylene Dionicride
Toluene
Xylene

This document supersedes earlier information and is based on current knowledge. The information and recommendations contained herein are given without obligation. In any case, it does not cover beyond our control. Information presented herein is given without obligation. In any case, it does not cover beyond our control. In case of doubt, please contact us. We assume no responsibility for the use of information contained herein. Any liability for damages resulting from the use of this information is excluded. Copyright reserved.

POLYPROCESSING COMPANY
Providing Solutions Through Innovation

Chemical Resistance

Chemical Resistance

Chemical "resistance" and "compatibility" are synonymous terms used in relation to the ability of a plastic to function in different environments. In regards to polyethylene chemical storage tanks, chemical resistance encompasses the total effect a product would have on a tank. The factors that make up the overall compatibility of a chemical to a rotomolded tank are (1) chemical attack, (2) absorption or permeation, and (3) solubility and stress crack resistance.

Chemical Attack

By definition, chemical attack involves an actual chemical reaction with the plastic. This can be a breaking of molecular chains and/or an addition of chemical groups to the molecule. For example, in the case of an oxidation reaction with polyethylene, both occur with the addition of carbonyl groups. This causes and eventual loss of properties to the point that a tank would not be serviceable.

Polyethylene in general is one of the most inert plastics available. Very few chemicals react with polyethylene and with those that do, the rate is relatively slow. The ultra high molecular weight characteristics of high density crosslinked polyethylene resins after crosslinking makes these particular polyethylenes even more resistant than other grades.

Permeation

This involves the physical absorption of the chemical into the polyethylene. If this is a volatile chemical, then an actual loss of the product can occur as the chemical vaporizes from the outer wall of the tank. The amount of absorption is generally limited to 3 to 7 percent by weight of the polyethylene. Also, the loss of volatile products is relatively small. For example, a 25-gallon tank with a 50-mil wall will only lose between 5 and 6 grams of gasoline per day due to permeation. The thicker the wall, the lower the rate of loss.

The absorption of a product into the wall of a tank will cause more property changes. The tensile strength is reduced approximately 15 to 20 percent and stiffness approximately 20 percent. Normally, this does not affect the utility of a tank or prohibit the application. The property losses due to permeation are offset by increasing the design wall thickness of the tank.

Elevated Temperature

The effects of elevated temperature (100° F or greater) on polyethylene tank are predictable and expected. Polyethylene, which is a flexible material, becomes even more flexible when heated. It will, therefore, bulge more at an elevated temperature than at room temperature.

By looking at the design hoop stress values for various temperatures, one can see the effects of increased temperature services. The values remain relatively constant up to 100° F, after which they begin to decrease.

100° F	600 psi	130° F	450 psi
110° F	550 psi	140° F	400 psi
120° F	500 psi	150° F	300 psi

A rise in temperature of 50° F (100° F to 150° F) reduces the design hoop stress value from 600 psi to 300 psi and doubles the required wall thickness. It follows that simply increasing the service rating of a tank from 1.35 S.G. to 1.65 S.G., or even to 1.90 S.G. is not necessarily sufficient. The proper wall thickness must be calculated for the temperature of service.

The maximum temperature rating for crosslinked polyethylene material is 150° F. Above that temperature the thermal stabilizers in the plastic are more rapidly consumed. Continued use will cause embrittlement and a reduction in the useful life of the part. Temperature services from 100° F to 150° F are acceptable applications, however, thicker tank walls are required to maintain a safe design. Consult the factory when application such as these arise.

Authorized Distributor:

Toll-Free 1-866-590-6845
www.polyprocessing.com

Table I

The following chemicals do not attach or permeate high density crosslinkable polyethylene resins up to 100° F. Each application should be considered individually. All concentrations apply except where noted.

Acetic Acid
Aluminum Salts
Alum
Ammonium Hydroxide
Ammonium Salts
Amyl Alcohol
Antimony Salts
Arsenic Acid
Barium Hydroxide
Benzene Sulfonic Acid
Bismuth Salts
Boric Acid
Bromic Acid
Butanediol
Butyl Alcohol
Calcium Hydroxide
Calcium Salts
Chromic Acid<50%
Citric Acid
Copper Salts
Detergents
Diazo Salts
Diethyl Carbonate
Diethanol Amine
Diethylene Glycol
Diglycolic Acid
Dimethylamine
Dimethyl Formamide
Ethyl Alcohol
Ethylene Glycol
Ferric Salts
Ferrous Salts
Fluoboric Acid
Fluosilicic Acid
Formic Acid
Gallic Acid
Gluconic Acid
Hexanol
Hydrazone<35%
Hydrozine Hydrochloride
Hydriodic Acid
Hydrobromic Acid
Hydrochloric Acid
Hydrofluoric Acid
Hydrofluorosilicic Acid
Hydrogen Peroxide<52%
Hydrogen Phosphide
Hydroquinone
Hypochorous Acid
Iodine Solutions
Lactic Acid
Latex
Lead Acetate
Magnesium Salts
Mercuric Salts
Mercurous Salts
Mercury
Methyl Alcohol
Methylsulfuric Acid
Michel Salts
Nicotinic Acid
Nitric Acid<50%
Oxalic Acid
Perchloric Acid
Phenol<10%
Potassium Hydroxide
Potassium Salts
Phosphoric Acid
Photographic Solutions
Propyl Alcohol
Propylene Glycol
Sea Water
Selenic Acid
Sewage
Silicic Acid
Silver Salts
Soap Solutions
Sodium Ferricyanide
Sodium Ferrocyanide
Sodium Hydroxide
[1]Sodium Hypochlorite<9%
Sodium Salts
Sodium Sulfonates
Stanic Salts
Stannous Salts
Starch Solutions
Stearic Acid
[1]Sulfuric Acid <80%
Sulfurous Acid
Sugar Solution
Glucose
Lactose
Sucrose, etc.
Tannic Acid
Tanning Extracts
Tartaric Acid
Titinium Acid
Toluene Sulfonic Acid
Triethanolamine
Urea
Vinegar
Wetting Agents
Zinc Salts

[1]Concentrations above stated percentage require special considerations, contact factory for guidelines concerning these applications.

Table II

The following oils and organic chemicals do not attack HDXLPE resins. They will be absorbed into the wall of the tank; however, there should be no loss of chemical. Because of this absorption, no chemical other than the original should be stored in the tank as long as contamination may result as the absorbed oil is leached out. Storage at temperatures up to 100° F are possible provided the effects of the absorption on the properties of the tank are not prohibitive.

Fatty Acids	**Mineral Oils**	**Animal Fats**	**Vegetable Oil**
Butyric	Lube	Lard	Corn
Lauric	Transformer	Fish Oil	Coconut
Linoleic	Hydraulic	Musk Oil	Cottonseed
Oleic		Whale Oil	Olive
Palmitic			Peanut
Stearic			

Table III

The following organic chemicals do not attack high density crosslinkable polyethylene resins. They will be absorbed into the wall of tank and a permeation loss will occur. Because of this permeation and the effect it has on the physical properties of the tank, it is generally not recommended that these chemicals be storage at room temperatures above 100° F. However, their use largely depends on such factors as size of tank, its location, toxicity of the chemical, and applicable codes such as NFPA, OSHA, etc.

Anitine
Benzene
Carbon Tetrachloride
Chlorabenzene
Cychohexanol
Cycolohexnone
Dibutylphthalate
Diesel Fuel
Dimethylamine
Ethyl Butyrate
Ethylene Chlorohydin
Fuel Oil
Fufural
Aliphatic Hydrocarbons (hexane, octane, hexene, octene, etc.)
Jet Fuel
Gasoline
Nitrobenzene
Octyl Cresol
Propylene Dichloride
Toluene
Xylene

This document reports accurate and reliable information to the best of our knowledge, but our suggestions and recommendations cannot be guaranteed because the conditions of use are beyond our control. Information presented herein is given without reference to any patent questions which may be encountered in use thereof. Such questions should be investigated by those using this information. Poly Processing Company assumes no responsibility for the use of information presented herein and hereby disclaims all liability in regard to such use.

OR-1000™ Tank Systems!

Specify Peace of Mind!

NSF/ANSI 61

- OR-1000™ Engineered System
- 4 Times Antioxidants
- Certified for 31+ Hazardous and Corrosive Chemical Applications
- Design Temperatures to 140°F
- Complies with State Regulations

Provide Longer Tank Life with an IMFO®/OR-1000™ System!

Increase Tank Longevity!

- Proven System since 1995
- Increased Chemical Resistance
- Complete Drain
- Maintenance Free
- Avoids Confined-Space Entry
- 4x Anti-Oxidant Package
- Sodium Hypochlorite/Sulfuric Acid/ Hydrochloric Acid applications*

*See warranty information on page 26

POLY PROCESSING COMPANY
Providing Solutions Through Innovation

Storage Solution: OR-1000 Liner

Poly Processing Company is the only rotational molding company with the ability to provide the strength, durability and safety of HDXLPE with the added value of an oxidation resistant liner, OR-1000, integrally molded as the interior surface of the part.

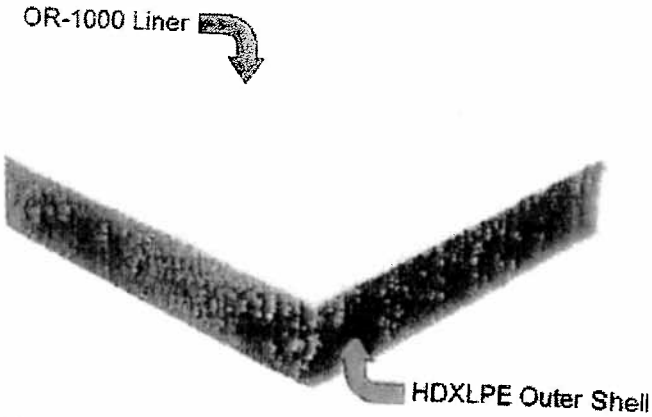

The liner thickness is in addition to the ASTM design thickness of the HDXLPE outer shell for the intended chemical application. This crosslink / OR-1000 combination has been successfully used for Sodium Hypochlorite and Sulfuric Acid services since 1995. To even further enhance the value of this combination, we are now adding this lining to the new high performance Metallocene High Density Crosslinked resin.

The reason for the OR-1000 material is simple. To develop the outstanding long-term properties of HDXLPE, the amount of anti-oxidants must be limited. Although HDXLPE has superior properties to any other rotational mold grade polyethylene, in a few highly oxidizing chemical applications, its optimum service life has not been obtained. To capitalize on the superior properties and performance characteristics of HDXLPE, the OR-1000 liner was developed to serve as an oxidation barrier to improve service life in oxidizing chemical applications. This combination provides unmatched performance and value to our customers.

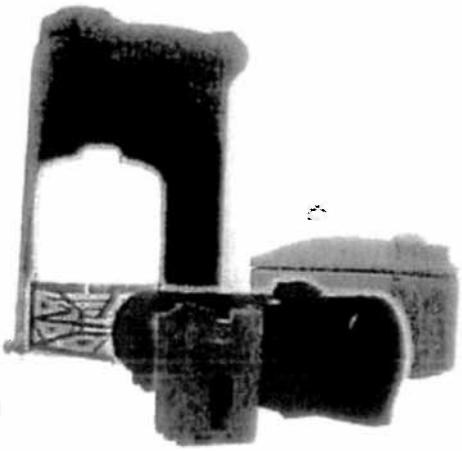

Sodium Hypochlorite and Sulfuric Acid remain very difficult storage and handling applications. However, we continue to bring you the very best in value, service and high performance products -- Poly Processing Company, *providing solutions through innovation.*

member
Authorized Distributor

member

1-866-590-6845
www.polyprocessing.com

PROCESSING

Providing Solutions Through Innovation

Polyethylene Tank Life Expectancy

For 35 years, Poly Processing Company has been **Helping Our Customers . . . Solve Problems** associated with storing hazardous chemicals, **Managing Risk** with the Environment and Employee Safety and **Growing Their Profits** with Increased Tank Longevity and Operating Efficiencies. We have specialized in providing hazardous chemical storage solutions to the industrial, water and waste water markets. While we manufacture both linear and crosslink polyethylene storage tanks; in **hazardous chemical environments, crosslink polyethylene** is the material of choice. Our customers report crosslink polyethylene tanks providing service for 10+ years with 15 to 20 years of tank service being common. However; there are many factors and variables that have an effect on the useful life of any tank including polyethylene.

Chemical, Concentration and Temperature: The chemical, concentration and operating temperature are all factors influencing the life expectancy of a polyethylene tank. For example, high concentrations of Sulfuric Acid are stress cracking agents and are more aggressive oxidizers than less concentrated chemicals such as 25% Caustic Soda. For this reason, Poly Processing offers our customers the OR-1000™ Anti-Oxidant Systems. Another example: 12% Sodium Hypochlorite will degrade from UV exposure and elevated temperatures. As it degrades, sediment builds in the bottom of the tank leading to a shorter tank life. To eliminate this sludge buildup, Poly Processing Company offers our customers the IMFO® (Integrally Molded Flanged Outlet). The IMFO® design promotes continuous "system" flushing increasing tank life and operating efficiencies. Poly Processing Company chemical storage tanks are constructed from premium materials and designed specifically for the chemical, concentration and temperature requirements.

Installation and Piping: The single biggest reason for tank life reduction is improper tank installation and "hard" piping. Polyethylene's broad spectrum of chemical resistance vs. other materials of construction is based on its ability to expand and contract. Flexible connections compensate for tank expansion and contraction promoting a longer useful life. It is important to follow Poly Processing Company's Installation Manual Instructions during the installation process.

Venting: Often overlooked, venting is a very important step that promotes tank longevity. Polyethylene tanks are rated at atmospheric pressure/vacuum. Adequate vent size is always based on flow and delivery rates so it is important to gather the following information to adequately determine the proper venting requirements:

1) Is the tank to be filled pneumatically?
2) Is the tank to be vented to atmosphere?
3) Does the length of the vent exceed 3 feet (piped to a central vent system)
4) Is a fume scrubbing system to be used?
5) Are vent screens to be used (restricts flow)?
6) Does the tank manufacturer offer a method of "emergency venting" to prevent over-pressurization?

Other Items Effecting Tank Longevity:

1) Continuous cycling (fill / discharge)
2) Excessive agitation
3) Mobile applications

For further information about your specific needs or applications, please contact Poly Processing Company at 1-866-590-6845 or visit our website at www.polyprocessing.com.

POLY PROCESSING
Providing Solutions Through Innovation

Chemical Resistance

Chemical Resistance

Chemical "resistance" and "compatibility" are synonymous terms used in relation to the ability of a plastic to function in different environments. In regards to polyethylene chemical storage tanks, chemical resistance encompasses the total effect a product would have on a tank. The factors that make up the overall compatibility of a chemical to a rotomolded tank are (1) chemical attack, (2) absorption or permeation, and (3) solubility and stress crack resistance.

Chemical Attack

By definition, chemical attack involves an actual chemical reaction with the plastic. This can be a breaking of molecular chains and/or an addition of chemical groups to the molecule. For example, in the case of an oxidation reaction with polyethylene, both occur with the addition of carbonyl groups. This causes and eventual loss of properties to the point that a tank would not be serviceable.

Polyethylene in general is one of the most inert plastics available. Very few chemicals react with polyethylene and with those that do, the rate is relatively slow. The ultra high molecular weight characteristics of high density crosslinked polyethylene resins after crosslinking makes these particular polyethylenes even more resistant than other grades.

Permeation

This involves the physical absorption of the chemical into the polyethylene. If this is a volatile chemical, then an actual loss of the product can occur as the chemical vaporizes from the outer wall of the tank. The amount of absorption is generally limited to 3 to 7 percent by weight of the polyethylene. Also, the loss of volatile products is relatively small. For example, a 25-gallon tank with a 50-mil wall will only lose between 5 and 6 grams of gasoline per day due to permeation. The thicker the wall, the lower the rate of loss.

The absorption of a product into the wall of a tank will cause more property changes. The tensile strength is reduced approximately 15 to 20 percent and stiffness approximately 20 percent. Normally, this does not affect the utility of a tank or prohibit the application. The property losses due to permeation are offset by increasing the design wall thickness of the tank.

Elevated Temperature

The effects of elevated temperature (100° F or greater) on polyethylene tank are predictable and expected. Polyethylene, which is a flexible material, becomes even more flexible when heated. It will, therefore, bulge more at an elevated temperature than at room temperature.

By looking at the design hoop stress values for various temperatures, one can see the effects of increased temperature services. The values remain relatively constant up to 100° F, after which they begin to decrease.

100° F	600 psi	130° F	450 psi
110° F	550 psi	140° F	400 psi
120° F	500 psi	150° F	300 psi

A rise in temperature of 50° F (100° F to 150° F) reduces the design hoop stress value from 600 psi to 300 psi and doubles the required wall thickness. It follows that simply increasing the service rating of a tank from 1.35 S.G. to 1.65 S.G., or even to 1.90 S.G. is not necessarily sufficient. The proper wall thickness must be calculated for the temperature of service.

The maximum temperature rating for crosslinked polyethylene material is 150° F. Above that temperature the thermal stabilizers in the plastic are more rapidly consumed. Continued use will cause embrittlement and a reduction in the useful life of the part. Temperature services from 100° F to 150° F are acceptable applications, however, thicker tank walls are required to maintain a safe design. Consult the factory when application such as these arise.

Authorized Distributor

Toll-Free 1-866-590-6845

www.polyprocessing.com

Crosslinked Polyethylene with OR-1000™ System
The #1 System for Oxidizing Chemical Environments

Poly Processing Company and other polyethylene tank manufacturers, as well as major polyethylene resin manufacturers have published many documents over the past several years discussing the benefits of certain rotational molding resins in acidic and alkaline chemical environments. The majority of these documents support the use of crosslinked polyethylene over linear polyethylene in acidic and basic chemical environments. These articles speak to the longevity of crosslinked polyethylene rotationally molded tanks, the safety of having polymer chains that are chemically bonded, and the leveraged investment of knowing that crosslinked polyethylene chemical storage tanks have been utilized for the last 35 years.

In 2001, one of the largest resin manufacturers in North America published a fairly extensive study which showed that their linear polyethylene in a lab environment performed as well as, if not better than crosslinked polyethylene, in acidic and alkaline chemical applications. This study, coupled with marketing efforts by linear polyethylene tank manufacturers who do not rotationally mold crosslinked polyethylene tanks in the course of their normal business, has given rise to some industry confusion and misunderstanding about what is the best resin system for storing oxidizing chemicals. We will summarize the facts about rotationally molded polyethylene storage tanks and the value of an engineered antioxidant resin system coupled with the long-term performance of crosslinked polyethylene.

We would first like to discuss the lab study performed by the linear resin manufacturer. The study compared crosslinked polyethylene with linear polyethylene in sulphuric acid and sodium hypochlorite environments. The sulphuric acid was concentrated approximately 93%-97%, and the Sodium Hypochlorite was around 14% concentration. The lab study describes how the crosslinked polyethylene and linear polyethylene were submersed in the chemicals and then tested using ARM Impact testing as well as Environmental Stress Crack Resistivity (ESCR) testing. The study concluded that the linear materials in a chemical resistivity mode held up as well as crosslinked materials in a lab environment. In addition, Higher ESCR properties are found in lower density materials like LLDPE or LDPE as compared to HDPE resins. It doesn't mean you want to use a tank made only from the lower density resins. ESCR shows how well the material performs in a pre-notched condition in the presence of certain chemicals.

The lab study performed by the resin manufacturer did not cover or discuss the long-term properties of these materials in harsh, environmental conditions. Over time, sodium hypochlorite and sulphuric acid create an oxidative environment, which remove hydrogen molecules from the polymer chains creating embrittlement. This phenomenon is inherent to all types of polyethylene, since they are hydrocarbon based molecules. Storing acids and bases in actual everyday environments presents a completely different set of parameters and stresses that have little to do with the lab environment.

Poly Processing Company has been aware of this relationship between ESCR and Chemical resistance for many years and has been an industry leader in creating engineered resin systems which give the end user the ability to have excellent oxidation and chemical resistivity without sacrificing long term performance and toughness. These engineered resin systems deliver peace of mind, a margin of safety, and leveraged investment to the end user.

Another critical factor to consider when storing acids and bases in actual everyday environments is the Long Term Hydrostatic Strength (LTHS) of the polyethylene. LTHS properties are one of the keys to providing the continued strength necessary for tanks during its service life. This property is especially important in field applications where tanks can see elevated temperatures approaching

140°F. LTHS tests are conducted at both ambient temperature (73°F) and at elevated temperature (140°F) since actual field conditions are typically in this range. Figure 1.

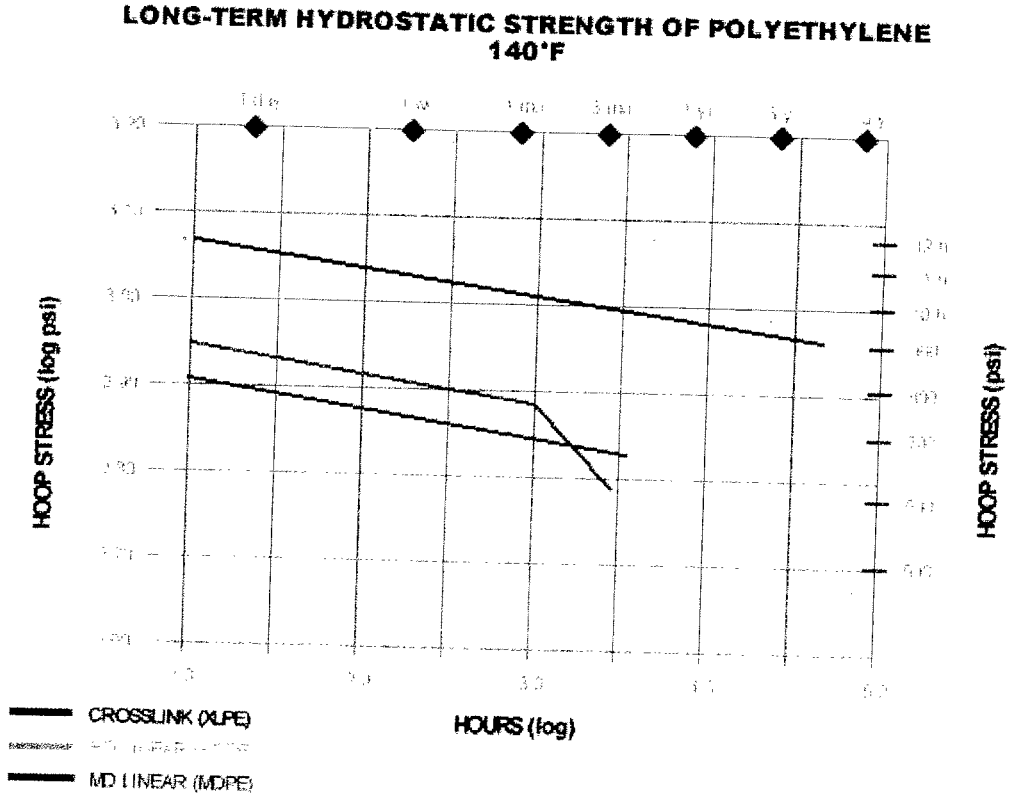

Source: Chevron Phillips Company, Plastics Technical Center

The rapid deterioration in properties is indicated by a "knee" in the curve of hoop strength versus time as illustrated in Figure 1 above. Even high performance HDPE will develop a LTHS knee at around 1000 hours (log 3), and some MDPE products will have a knee in less than 10,000 hours (log 5). This type of performance substantially reduces the expected long-term performance at elevated temperatures. Crosslinked polyethylene has been tested to 50,000 hours at 140°F and shows no signs of a knee.

There is still the need to surround the oxidation resistant material with a robust resin system that will give you longer useful tank life, superior impact resistance, and greater tensile strength for a safer product. That is why crosslinked polyethylene is still the material of choice for industrial and municipal chemical applications.

Poly Processing Company has been the leader in rotationally molded crosslinked polyethylene storage tanks for 35 years. We work with the leading universities in the country to develop engineered resin systems that will perform above and beyond any standard "off the shelf" polyethylene in harsh, oxidizing environments. One of the systems we developed is the OR-1000™ system. This system uses the best linear resin for chemical resistivity combined with four (4) times the antioxidant power and a crosslink outer wall for maximum long-term performance and durability.

Poly Processing Company developed the OR-1000™ oxidation resistance system in 1995. This lower density linear material serves to increase the service life of crosslinked polyethylene tanks in oxidizing chemical service (Sodium Hypochlorite, Sulphuric Acid, Hydrochloric Acid, and Nitric Acid). To develop the outstanding long-term physical properties of crosslinked polyethylene, the amount of antioxidant compounded into the material has to be limited. Although crosslinked polyethylene has superior properties to any other rotational molding grade polyethylene, the tank's useful service life will be reduced without the OR-1000™ system. In order to utilize the superior properties of crosslinked polyethylene, the OR-1000™ system was developed to greatly improve the service life in harsh oxidizing chemical environments. This material is a medium density linear based resin with a large amount of antioxidant added to it for the best oxidizing resistance system in the industry. The OR-1000™ system has been engineered to prevent de-lamination during the useful life of the tank.

To compare the effect of oxidizing chemicals on the OR-1000™ system and crosslinked polyethylene, 1/8" thick tensile bars of both OR-1000™ and crosslinked polyethylene were submerged in a manufacturer's storage tank. This tank handled a highly oxidizing chemical, 17% Sodium Hypochlorite, and was emptied and filled at least once a day. Every 30 days, samples were pulled and tensile and percent elongation was determined as well as ESCR tests. Oxidization or reduction in physical properties is indicated by reduced in elongation. After six months of testing, the elongation of the crosslinked polyethylene tensile bars had decreased 26% while OR-1000™ elongation had no change. This is due to the added antioxidant in the OR-1000™ system as well as the fact that the linear material used in the testing was a lower density material than the crosslinked material.

Crosslinked polyethylene provides superior environmental stress cracking resistance (ESCR) or sometimes generally referred to as resistance to slow crack growth (SCG) in almost all chemical applications. Two tests which clearly show this difference are the bent strip ESCR (ASTM D1693) with 10% Igepal where crosslink polyethylene does not fail in over 1000 hours compared to typical values for LMDPE of <400 hours. Another test which shows the slow crack growth difference with no surfactant (in air) is the polyethylene notch test (PENT) described in ASTM F 1473 and crosslink polyethylene again does not fail in over 1000 hours and LMDPE grades fail in <100 hours. Even though linear polyethylene grades with improved ESCR have become available over the past 10 to 15 years, they still do not match crosslinked polyethylene in SCG performance. Slow crack growth resistance as was shown earlier in this paper is an important property that can affect the long-term performance of tanks.

The best of both worlds is having the OR-1000™ system for the long-term oxidative resistivity characteristics (as discussed in the resin manufacturer's lab study), with the robustness of crosslinked polyethylene for the long-term durability and long useful life that is expected of industrial grade chemical storage tanks. This is why so many chemical manufacturers and distributors choose Poly Processing Company for engineered chemical storage solutions.

Crosslinked polyethylene tanks with the OR-1000™ system varying in sizes from 500 gallons to 14,950 gallons have been in true industrial and municipal use for over 10 years with excellent results. Poly Processing Company backs every crosslinked polyethylene tank with the OR-1000™ system with a 5 year full warranty on all suitable applications including sodium hypochlorite and hydrochloric acid, sulfuric acid 80%-98% carries a full 3 year warranty

Store your harsh oxidizing chemicals with the confidence and peace of mind that you deserve. Specify Poly Processing Company's crosslinked polyethylene tanks with the OR-1000™ system for longevity, safety, and leveraged investment. Please consult your distributor or Poly Processing Company at 1-866-590-6845 for your specific requirements.

tobeywade
STRUCTURAL ENGINEERS

October 2, 2009
Project No. R115-07-08

Mr. Aubry Burgess, Maintenance Supervisor
PHILIP SERVICES CORPORATION
ENVIRONMENTAL SERVICES DIVISION
2095 Newlands Drive East
Fernley, NV 89408

RE: TANK 103 CERTIFICATION REPORT

Dear Mr. Burgess:

In accordance with the Fernley Facility Amended Tank Replacement plan as prepared by Philip Services Corporation (PSC) and dated March 25, 2008, each tank is required to be certified by Independent Registered Professional Engineers (IRPE's) prior to being placed into service. This letter has been prepared to document the evaluations as performed by Tobey-Wade Consulting.

Background

Tank 103 is a Crosslinked Polyethethylene Tank with a 6,250 gallon capacity as manufactured by Poly Processing Company. Poly Processing has provided data relative to the tank's strength and its chemical resistance capabilities. Poly Processing has also provided an opinion as to any offsets observed in the tank shell.

Schiff Associates has evaluated the tank's suitability and compatibility for its proposed use in PSC's facility. Their conclusions have been provided under separate cover to PSC.

Findings

Based on our research, analysis and structural observations, the following systems are hereby certified as being in compliance with the Amended Tank Replacement plan:

- Tank 103 is situated on a reinforced concrete foundation system which is capable of adequately supporting the tank and its contents under static and dynamic conditions.
- Tank 103 is located in an area with sufficient secondary containment as required by 40 CFR Ch. I, 264.193.
- Tank 103 is stabile against overturning when subjected to loads based on 2006 International Building Code level seismic events.

ADDITION DATE 10/09/09
REVISION NUMBER 1

NEVADA OFFICE
329 FLINT STREET ■ RENO, NEVADA 89501 ■ TEL: (775) 324.7757 ■ FAX: (775) 324.7797

- Tank 103 is anchored to prevent sliding when subjected to loads based on 2006 International Building Code (IBC) level seismic events. Structural Observation and Special Inspection of the anchorage system has been performed as required by the IBC. The Structural Observation and Special Inspection reports are attached.

- Tank 103 has been tested for leakage and found to be watertight. The Tank Leakage Test report is attached.

- The exterior of Tank 103's shell wall has been inspected and found to be generally undamaged. The Tank Shell Inspection report is attached.

Structural Observation, tank leakage inspections and tank shell inspections were performed by Tobey-Wade Consulting under my direct supervision. Special Inspections were performed by ICC-certified inspectors from Black Eagle Consulting based on anchorage requirements provided by Tobey-Wade Consulting.

Certification Statement

I certify under penalty of law that this report and all attachments were prepared under my direction and supervision in accordance with a system developed to assure that qualified personnel properly gather and evaluate the information submitted. Based on my inquiry of the person or persons who manage the system or those persons directly responsible for gathering the information, the information, submitted is, to the best of my knowledge and belief, true, accurate, and complete. I am aware that there are significant penalties for submitting false information, including the possibility of fines and imprisonment for knowing violations.

This report has been prepared in accordance with acceptable engineering practices and is subject to the assumptions and limitations stated in the report. Also note that this certification covers the aforementioned aspects of Tank 103 only.

Please feel free to contact me at your convenience should you have any questions relating to our findings.

Sincerely,
TOBEY-WADE CONSULTING

Terrence R. Tobey

Terrence R. Tobey, S.E.
Principal Structural Engineer

PROFESSIONAL ENGINEER-STATE OF NEVADA
TERRENCE R. TOBEY
10.7.09
STRUCTURAL
No. 0564

Exp. 6.30.10

ADDITION DATE 10/09/09
REVISION NUMBER 1

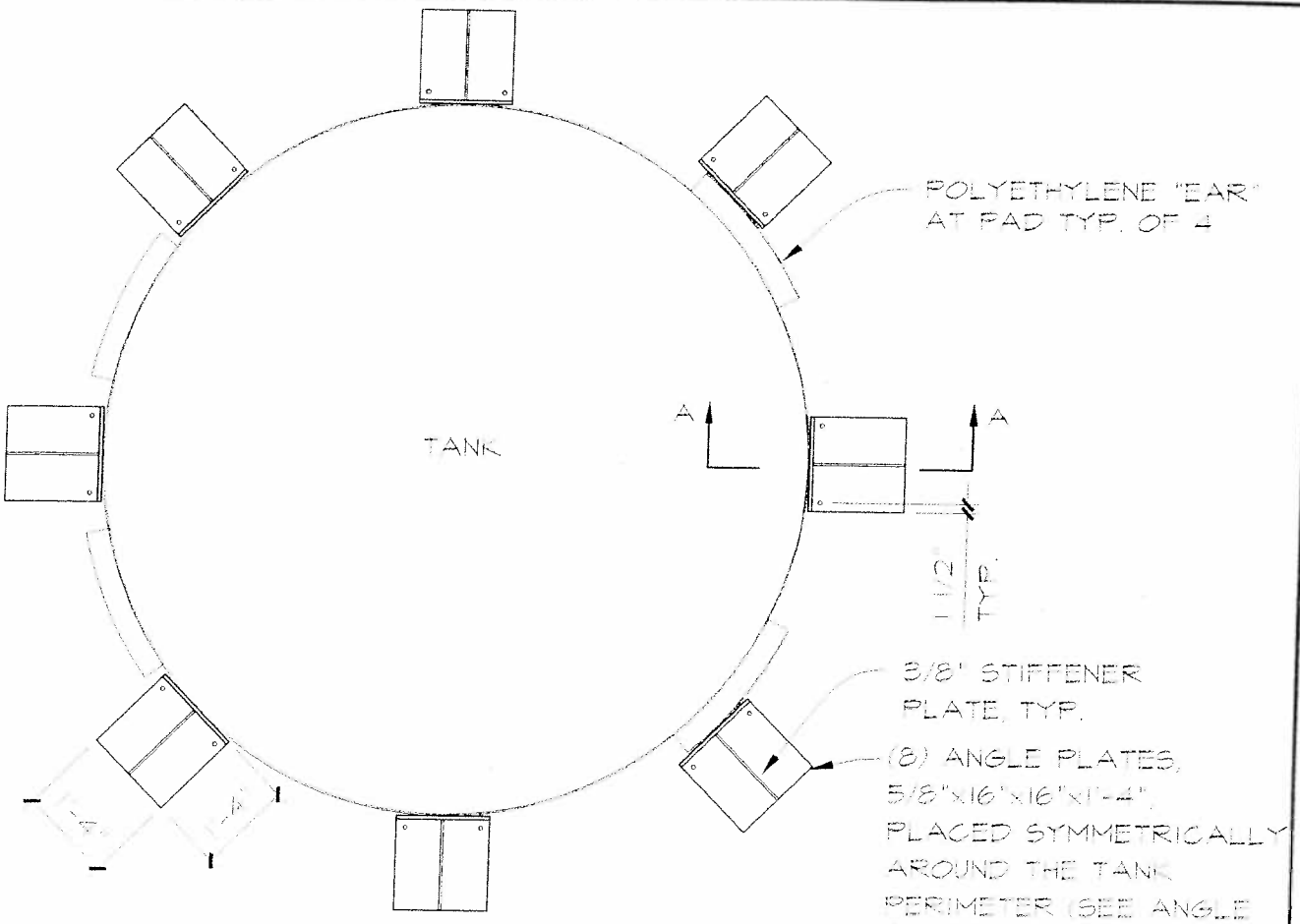

TANK NO's 101-103 & 105-106
CYLINDRICAL FLAT BOTTOM TANK
SCALE: 3/8"=1'-0"

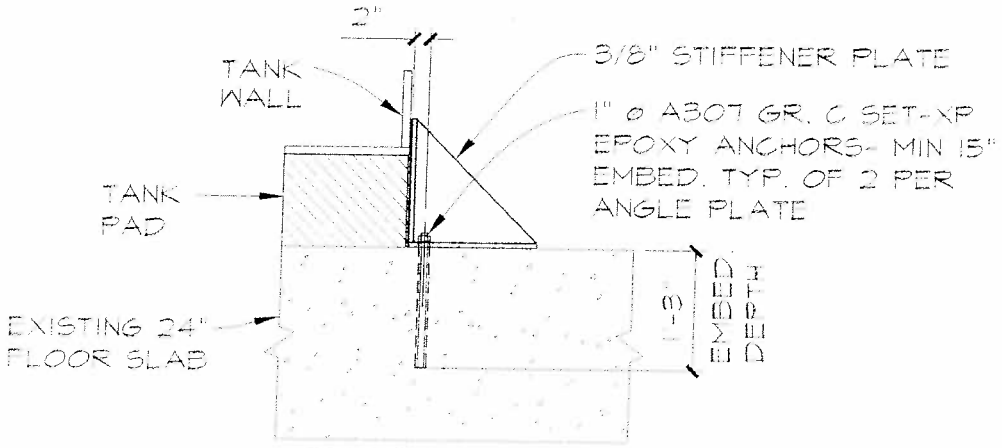

SECTION A-A
N.T.S.

AS-BUILT DRAWING
DATED: OCT. 5, 2009

tobey **wade**
CONSULTING
329 Flint Street
Reno, Nevada 89501
Tel. (775) 324-7757 Fax (775) 324-7797

PHILIP SERVICES CORPORATION
FERNLEY FACILITY
TANK NO's 101-103 & 105-106
AS-BUILT ANCHORAGE DETAILS
FERNLEY, NEVADA

Project No.
R115-07-08

Date: OCT. 1, 2008

ADDITION DATE 10/09/09
REVISION NUMBER 1

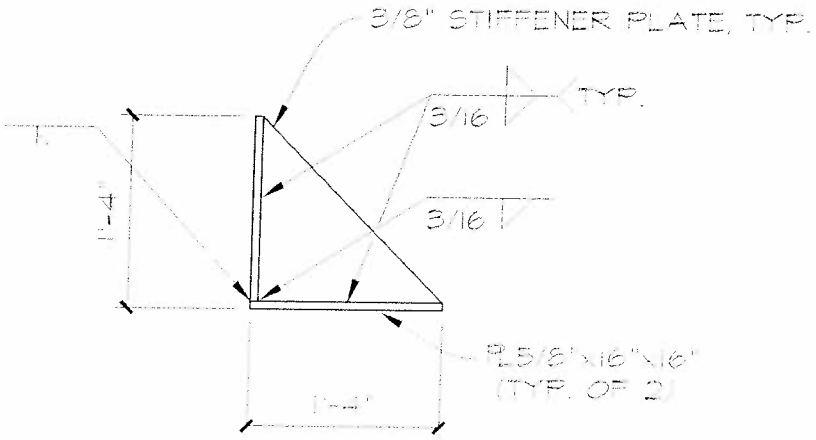

ANGLE PLATE DETAIL

SCALE: 3/4"=1'-0"

AS-BUILT DRAWING
DATED: OCT. 5 2009

tobey **wade**
CONSULTING
329 Flint Street
Reno, Nevada 89501
Tel. (775) 324-7757 Fax (775) 324-7797

PHILIP SERVICES CORPORATION
FERNLEY FACILITY

TANK NO's 101-103 & 105-106
AS-BUILT ANCHORAGE DETAILS

FERNLEY, NEVADA

Project No.
R115-07-08

ADDITION DATE 10/09/09
Date: OCT. 1, 2008
REVISION NUMBER 1

NON-CONTROLLED COPY
INFORMATION SUBJECT TO CHANGE WITHOUT NOTICE
VERIFY REV LEVEL OF PAPER COPY WITH REV LEVEL ON PPC WEB SITE

Proposed Storage Tank

(A) MOLDED-IN LIFTING LUG PAIRS (4) PLACES
USE MINIMUM OF (1) LUG AT EACH LOCATION FOR LIFTING (SEE DETAIL)

MOLDED-IN LADDER ATTACHMENT LUG TYP (2) PLACES

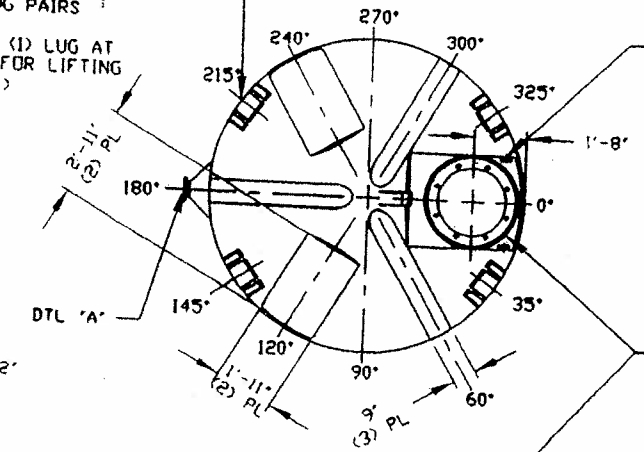

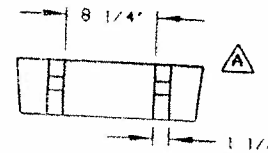

LIFTING LUG DETAIL
(4) PLACES
SCALE: 1"=1'-0"

NOZZLE SCHEDULE & ACCESSORIES

SERVICE	MK	STOCK NO.	SIZE	FITTING	DEG	ELEV

STANDARD COVER:
24"/(8) BOLT MANWAY COVER/PE (SHOWN)
PPC STOCK NO. 3218 OR
24"/STRAPPED MANWAY COVER/PE (B)
PPC STOCK NO. 3217
(OPTIONAL 24" COVERS AVAILABLE)

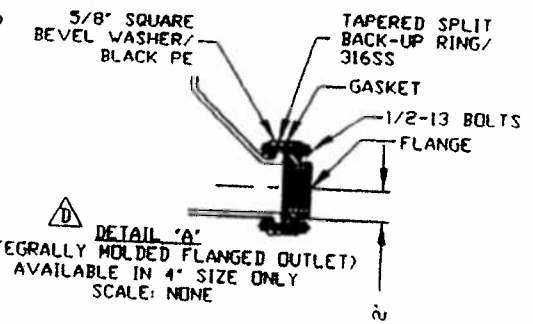

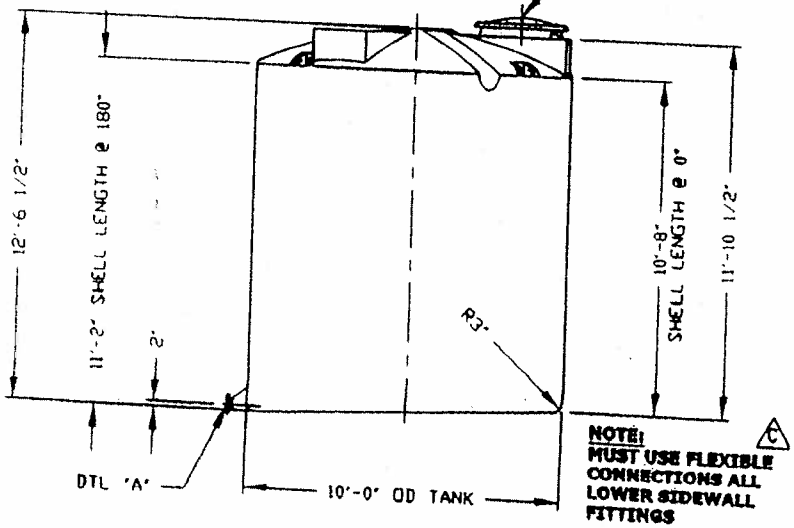

NOTES
1. THIS IS A COMPUTER GENERATED DWG. DO NOT REVISE BY HAND.
2. DIMENSIONS WILL VARY ±3% DUE TO VARIATIONS IN MULTIPLE MOLDS & CONDITIONS PREVALENT DURING MANUFACTURE & USAGE.
3. NO MOLDED IN GALLONAGE MARKERS THIS TANK.

CALCULATED CAPACITIES/ VOLUME IN U.S. GALLONS		
DESIGN CAP	DOME VOL	TOTAL VOL
6283	470	6753

CONFIDENTIAL PROPERTY OF POLY PROCESSING COMPANY
NOT FOR REPRINT OR USE WITHOUT PERMISSION

DWG TITLE: 6250 GALLON SLOPE BOTTOM IMFO TANK

SCALE: 1/4"=1'-0"
DATE: 3/17/00
POLYPROCESSING COMPANY — Western Region
BY: MB WILKERSON
CK: D. RECTOR
SHEET: 1 OF 1
COMPUTER FILE: 11206250
REV: E

REV "E" REVISED FOR MOLD MODIFICATIONS BY:JB 6/16/033 CK:VH
REV "D" REVISED IMFO STYLE BY:JB 4/30/03 CK:VH
REV "C" ADDED FITTING NOTE BY:JB 3/3/02 CK:HBW
REV "B" REVISED STOCK NUMBER BY:JB 3/3/02 CK:HBW
REV "A" ADDED LIFTING LUGS & DETAIL BY:JB 10/31/02 CK:VH

ADDITION DATE 10/09/09
REVISION NUMBER 1

POLYPROCESSING
COMPANY, LLC

January 21, 2009

Aubry Burgess
Phillips Services
2095 Newlands Dr. E.
Fernley, NV 89408

Re: Tank with serial number C0802026 - 6250 gallon slope bottom tank

Dear Aubry,

Thank you for sending the pictures to show us what the concerns are with the tank referenced above.

I understand that there is some concern in regards to the appearance of the offset parting lines. The offset is what we refer to as a "witness line". This is where the pieces of the mold are bolted together in preparation of manufacturing the polyethylene part. If you look inside the tank you will see that it is a homogenous part with no lines. This offset will not affect the integrity, warranty or service life of the tank.

In addition there was some concern about a gouge in the wall of the tank. In looking at the picture this appears to be on the surface only and will not affect the integrity, warranty or service life of the tank. I am including a typical wall thickness chart for the tank so you can see that this is not deep enough to be a concern. If you want to sand the area of the gouge you can do so.

Please give us a call if there is anything else you need.

Sincerely,

Patti Burch
Poly Processing Company
Technical Support
PB/pb

ADDITION DATE 10/09/09
REVISION NUMBER 1

TANK INSPECTION FORM

Philip Services Corporation / 21 EMI
PSC Fernley Facility
2095 Newlands Drive East
Fernley, NV 89408
(775)575-2760

TANK NO.: 103

TANK SHELL INSPECTION

Date Inspected: Feb. 20, 2009

Findings: 1 very minor scrape (less than 1/16" x 2"); otherwise no scrapes, gouges or nicks. (3/8" offset at lower course, similar to other tanks - ok)

TANK ANCHORAGE STRUCTURAL OBSERVATION

Type of Anchorage System: Typical steel anchor plate

Date Inspected: Feb. 20, 2009

# of Anchor Plates: 8

AB Type and Diameter: 1 inch diameter

Plate Contact with Tank: Yes (within .5 inch at the top of the steel anchor plate)

Special Inspection Completed? Yes (see Black Eagle Inspection reports)

TANK LEAKAGE TEST

Date Filled: Feb. 19, 2009 Water Level below Inspection Hatch: 22" +/-

Date of Re-inspection: Feb. 20, 2009 Water Level below Inspection Hatch: 21" +/-

Shell Leakage? No

Leakage on Floor/Drain Pan at Manifold?

No water present in the drain pan but the floor is wet due to wash-down after drilling AB holes.

INSPECTOR: _____ **DATE:** _____

INSPECTOR: Lawrence Tobey **DATE:** 2.20.09

ADDITION DATE 10/09/09

REVISION NUMBER 1

SPECIAL INSPECTOR DAILY REPORT

BLACK EAGLE CONSULTING, INC.
GEOTECHNICAL AND CONSTRUCTION SERVICES
1345 Capital Blvd., Suite A, Reno, Nevada 89502-7140
Phone (775) 359-6600 Fax (775) 359-7766

Project: PSC Tank Anchors	Project No.: 560 02-1	Date: 2-9-09
Client: PSC	Contact: Aubrey	Total Hrs.: 2
Location: Fernley	Weather:	Temp.:
Contractor: In house	Contact: Aubrey	Stand By Hrs.:

Equipment in use:

Describe Inspections Made, Including Locations: Shop - weld inspection of 48 plate assembly tank anchors for six tanks # 101, 102, 103, 105, 106 & 107. Welds are visually acceptable to AWS D1.1 and are of the proper size type length and location as per approved plans.
Process, equipment and consumables comply with AWS D1.1

List Tests Made:

List Items Requiring Correction, Corrections of Previously Listed Items, and Previously Listed Uncorrected Items:

List Changes to Approved Plans Authorized by the Building Official and Architect or Engineer:

Comments:

Signed: Robert Rodden Date: 2-9-09

Print Full Name: ROBERT RODDEN I.D. Number: 5259600

Reviewed By: mm Date

White to *Office* Canary to *Field File* Green to *Personal File*
cc:

ADDITION DATE 10/09/09
QA/QC SIDR # 4
REVISION NUMBER 1

SPECIAL INSPECTOR DAILY REPORT

Page ___ of ___

BLACK EAGLE CONSULTING, INC.
GEOTECHNICAL AND CONSTRUCTION SERVICES
1345 Capital Blvd., Suite A, Reno, Nevada 89502-7140
Phone (775) 359-6600 Fax (775) 359-7766

Project: Tank Anchors	Project No.: 560 02-1	Date: 2.19.09
Client: PSC	Contact: Aubry	Total Hrs.: 4
Location: Fernley	Weather: fair	Temp.:
Contractor: In-house	Contact: Aubry	Stand By Hrs.:

Equipment in use: _____

Describe Inspections Made, Including Locations: Shop - observed epoxy installation of 80 1" dia ASTM A307 grade C all thread 18" long into 1 1/8" dia. 15" deep rotohammered holes using standard and carbide bits, that were then brushed and blown clean. Each tank has 8 anchor plates equally spaced around tanks 101, 102, 103, 105 & 106, with two all threads embedded at each plate.
Epoxy is Simpson Set-XP and was applied as per manufacturer specs.

List Tests Made: _____

List Items Requiring Correction, Corrections of Previously Listed Items, and Previously Listed Uncorrected Items:

List Changes to Approved Plans Authorized by the Building Official and Architect or Engineer: _____

Comments: _____

Signed: [signature] Date: 2.19.09

Print Full Name: ROBERT RODDEN I.D. Number: 5259600

Reviewed By [signature] Date _____

White to *Office* Canary to *Field File* Green to *Personal File*

cc:

ADDITION DATE 10/09/09
QA/QC SIDR # 4
REVISION NUMBER 1

SPECIAL INSPECTOR DAILY REPORT

Page 1 of 1

BLACK EAGLE CONSULTING, INC.
GEOTECHNICAL AND CONSTRUCTION SERVICES
1345 Capital Blvd., Suite A, Reno, Nevada 89502-7140
Phone (775) 359-6600 Fax (775) 359-7766

PROJECT:	PSC	**PROJECT #:**	560-02-1	**DATE:**	2/23/2009
CLIENT:	PSC	**CONTACT:**	AUBRY	**TOTAL HRS.:**	2.5
LOCATION:	FERNLY, NV	**WEATHER:**	OVERCAST AND COOL	**TEMP:**	50'S
CONTRACTOR:	PSC	**CONTACT:**	AUBRY	**STAND BY HRS.:**	N/A

EQUIPMENT IN USE: CARPENTER CREW

DESCRIBE INSPECTIONS MADE, INCLUDING LOCATIONS:

ARRIVED ON SITE TO PROVIDE OBSERVATION, TESTING, AND INSPECTION FOR HIGH STRENGTH BOLTING FOR STAINLESS STEEL 1" DIAMETER ALL THREAD CONNECTIONS. UPON ARRIVAL OBSERVED ALL CONNECTIONS HAD BEEN COMPLETED AND WERE READY FOR TORQUE/TENSION TESTING. OBSERVED EIGHT (8) PIECES OF ANGLE IRON WERE PLACED AROUND THE BASE OF EACH STORAGE CONTAINER WITH TWO (2) BOLTS PER CONNECTION. PERFORMED TORQUE/TENSION TESTING USING A CALIBRATED WRENCH SET FOR 300LBS. PERFORMED TORQUE/TENSIONING TESTING FOR >/= 50% OF THE CONNECTIONS FOR THE 1" DIAMETER ALL THREADS FOR STORAGE CONTAINERS # 101, 102, 103, 105, & 106. OBSERVED ALL CONNECTIONS TESTED MET OR EXCEEDED THE REQUIRED SPECIFICATIONS WITH NO DEFICIENCIES NOTED. INFORMED CONTRACTOR OF RESULTS AND OBSERVATIONS AND

LIST TESTS MADE:

PERFORMED TORQUE/TENSIONING TESTING FOR >/= 50% OF THE CONNECTIONS FOR 1" DIAMETER ALL THREADS FOR STORAGE CONTAINERS # 101, 102, 103, 105, & 106. PERFORMED TESTING TO 300LBS AS SPECIFIED.

LIST ITEMS REQUIRING CORRECTION, CORRECTIONS OF PREVIOUSLY LISTED ITEMS, AND PREVIOUSLY LISTED UNCORRECTED ITEMS:

N/A

LIST CHANGES TO THE APPROVED PLANS AUTHORIZED BY THE BUILDING OFFICIAL AND ARCHITECT OR ENGINEER:

N/A

SIGNED: _____ DATE: 2/23/2009

PRINT FULL NAME: MICHAEL SIMMONS I.D. NUMBER: 1084885-49/84

mcl

ADDITION DATE 10/09/09

REVISION NUMBER 1

ALK./CYANIDE STORAGE TANKS

TANK DATA SHEET

RCRA-Regulated? **YES**
Tank Location: **Tank Storage Bay - Alk./Cyanide Area**
Tank Name: **Waste Alk./Cyanide Storage**
Tank Numbers: **#201 - #206**
Process Description: **Alk./Cyanide Storage**
Vessel Fluid: **Waste Alkaline Cyanide liquid Mixtures**
Specific Gravity **≤ 1.90** Freeboard At Working Vol (ft): **6" + dome top**
Normal Operating Pressure (psig): **Atmospheric** Temperature (°F): **Ambient**

	Material	Thickness	Type
Bottom	**Cross-link Polyethylene**	**5/8" nominal**	**Flat, Sloped**
Shell	**Cross-link Polyethylene**	**Varies .40" - .90" top to bottom**	**Cylindrical**
Top	**Cross-link Polyethylene**	**Design Avg. .40"**	**Domed Roof**

Working Volume (USG): **6000** Insulation: **None**
Nominal Volume (USG): **6280** Method of Construction: **Rotationally Molded**
Tank O.D. (ft): **10' - 0"** Tank Height or Length (ft): **12' – 6 1/2"**
Design Code Used: **ASTM D1998** Date in Service: **2009**
Anchorage: **Seismic restraints bolted to concrete. Anchorage designs per 2006 IBC.**

Connections

Item No.	Size (In.)	Gasket	Description
1	**24"**		**Roof manway / E-vent**
2	**4"**		**Vent fitting to Scrubber**
3	**3"**		**Tank Fill fitting**
4	**2"**		**Level Sensor connection**
5	**4"**		**Flange Drain fitting**
6			**Lifting Lugs**
7			
8			
9			
10			
11			
12			
13			
14			
15			

Tank Mfgr: **Poly Processing Co.**

Remarks: **Poly Processing stock #1206250. Tank manufactured of hi-density cross-linked rotationally molded polyethylene with "Extra heavy wall thickness" for 1.9 sp. gr. service. Tank includes OR-1000 oxidation resistant liner.**

Tank Sketch

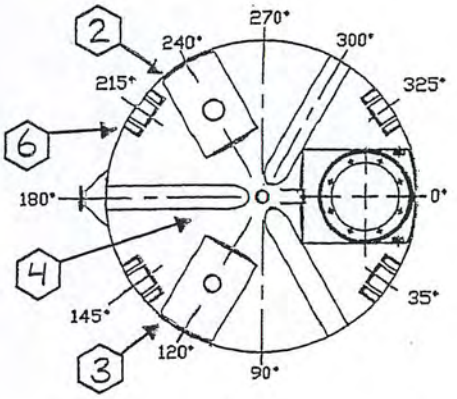

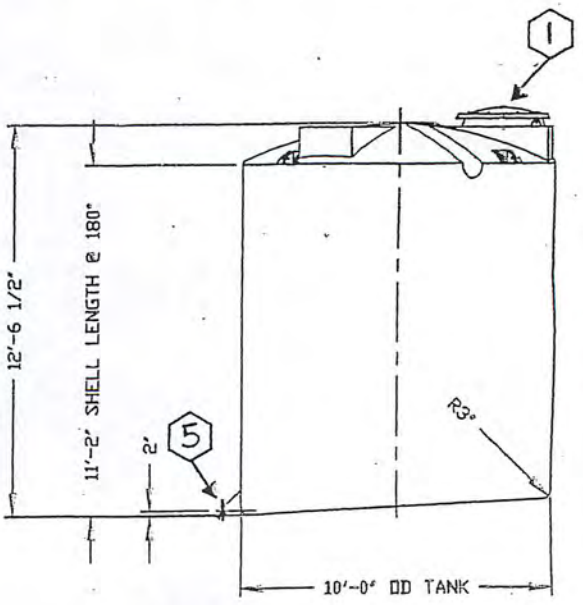

SCHIFF ASSOCIATES
FIFTY YEARS OF PROFESSIONALISM

gbell@schiffassociates.com

www.schiffassociates.com
Consulting Corrosion Engineers – Since 1959

October 6, 2009 via email to: Burgess, Aubry [ABurgess@pscnow.com]

PSC ENVIRONMENTAL SERVICES
2095 Newlands Drive E
Fernley, NV 89408

Attention: Mr. Aubry Burgess
Maintenance Supervisor

Re: **Material Compatibility/Corrosion Certification Letter for PLANNED Tank 201 for Cyanide/Alkaline Storage Tanks**
Amended Tank Replacement Plan
Fernley, NV
SA#08-1383LGL

Dear Mr. Burgess:

We have conducted the following investigations and research relative to the suitability and compatibility of the 6,250 Gallon sloped bottom High Density Polyethylene (HDPE) tanks fabricated by PolyProcessing with OR-1000™ lining system for cyanide/alkaline storage at ambient temperatures:

1) Reviewed PolyProcessing Company's product information provided on tank design and compatibility.

2) Conducted independent research on compatibility of high density cross-linked rotationally molded polyethylene for service at ambient temperature.

3) Visited the PSC facility in Fernley in December 2008 and March 2009 to understand the anticipated process flow and conditions of waste streams at the site.

4) Reviewed supplemental information requested from PolyProcessing Company regarding issues identified during site visit.

The tank design is suitable for cyanide/alkaline storage at ambient temperatures per the manufacturer's information in the position as Tank 201 in the waste processing stream of the PSC Facility as configured and intended per the Amended Tank Replacement Program outlined in the letter from Thomas Nelson of PSC to Nevada Division of Environmental Protection dated March 25, 2008.

ADDITION DATE 10/09/09

REVISION NUMBER 1

CERTIFICATION

I certify under penalty of law that this document and all attachments were prepared under my direction or supervision according to a system designed to assure that qualified personnel properly gather and evaluate the information submitted. Based on my inquiry of the person or persons who manage the system, or those persons directly for gathering the information, the information submitted is, to the best of my knowledge and belief, true, accurate, and complete. I am aware that there are significant penalties for submitting false information, including the possibility of fine and imprisonment for knowing violations.

CLOSURE

Our services have been performed with the usual thoroughness and competence of the engineering profession. No other warranty or representation, either expressed or implied, is included or intended.

Sincerely,
SCHIFF ASSOCIATES

Graham E.C. Bell, PE
Principal Engineer
NACE International Corrosion Specialist #5350

Attachments: Proposed Storage Tank Drawing
Waste Information Provided by PSC on PolyProcessing Data Sheet
PolyProcessing Technical Bulletin, Chemical Resistance Technical Information
OR-1000 Tank Cut Sheet
OR-1000 Cut Sheet
OR-1000 Product Sheet
PolyProcessing Polyethylene Tank Life Expectancy
PolyProcessing Chemical Compatibility Data including Temperature Dependence
PolyProcessing Technical Bulletin, Crosslinked Polyethylene with OR-1000™ System, Dated June 2005, Rev. A

ADDITION DATE 10/09/09
REVISION NUMBER 1

NON-CONTROLLED COPY
INFORMATION SUBJECT TO CHANGE WITHOUT NOTICE
VERIFY REV LEVEL OF PAPER COPY WITH REV LEVEL ON PPC WEB SITE

Proposed Storage Tank

(A) MOLDED-IN LIFTING LUG PAIRS (4) PLACES
USE MINIMUM OF (1) LUG AT EACH LOCATION FOR LIFTING (SEE DETAIL)

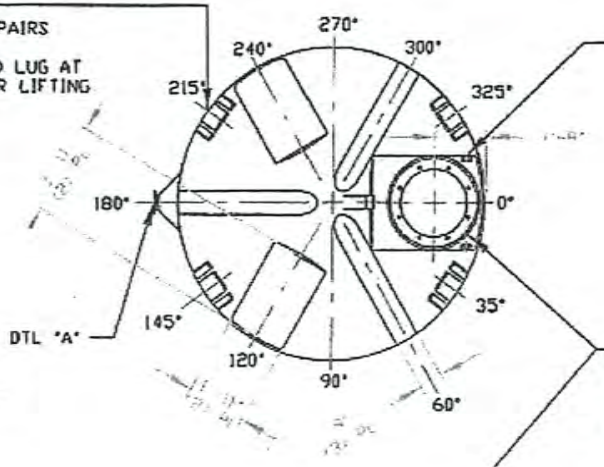

MOLDED-IN LADDER ATTACHMENT LUG TYP (2) PLACES

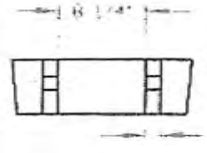

LIFTING LUG DETAIL
(4) PLACES
SCALE: 1"=1'-0"

STANDARD COVER:
24"/(8) BOLT MANWAY COVER/PE (SHOWN)
PPC STOCK NO. 3218 OR
24"/STRAPPED MANWAY COVER/PE (B)
PPC STOCK NO. 3217
(OPTIONAL 24" COVERS AVAILABLE)

NOZZLE SCHEDULE & ACCESSORIES

SERVICE	MK	STOCK NO.	SIZE	FITTING	DEG	ELEV

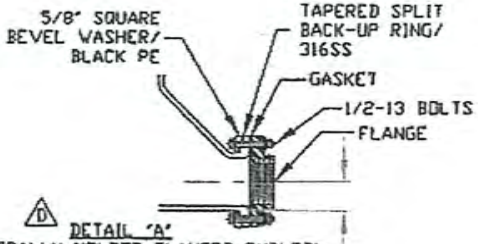

(D) DETAIL "A"
(INTEGRALLY MOLDED FLANGED OUTLET)
AVAILABLE IN 4" SIZE ONLY
SCALE: NONE

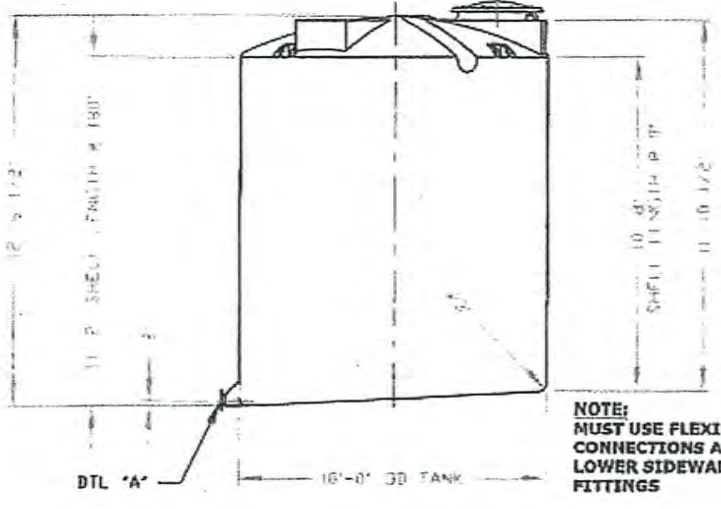

(C) NOTE:
MUST USE FLEXIBLE CONNECTIONS ALL LOWER SIDEWALL FITTINGS

NOTES
1. THIS IS A COMPUTER GENERATED DWG. DO NOT REVISE BY HAND.
2. DIMENSIONS WILL VARY ±3% DUE TO VARIATIONS IN MULTIPLE MOLDS & CONDITIONS PREVALENT DURING MANUFACTURE & USAGE.
3. NO MOLDED IN GALLONAGE MARKERS THIS TANK.

CALCULATED CAPACITIES/ VOLUME IN U.S. GALLONS		
DESIGN CAP	DOME VOL	TOTAL VOL
6283	470	6753

CONFIDENTIAL PROPERTY OF POLY PROCESSING COMPANY NOT FOR REPRINT OR USE WITHOUT PERMISSION

DWG TITLE: 6250 GALLON SLOPE BOTTOM IMFO TANK

SCALE: 1/4"=1'-0"
DATE: 3/17/00
POLYPROCESSING COMPANY
Western Region
DR: MB WILKERSON
CH: D. RECTOR
SHEET: 1 OF 1
COMPUTER FILE: 11206250
REV: E

REV "E" REVISED FOR MOLD MODIFICATIONS BY:JB 6/16/053 CK:VM
REV "D" REVISED IMFO STYLE BY:JB 4/30/03 CK:VM
REV "C" ADDED FITTING NOTE BY:JB 3/3/02 CK:MBW
REV "B" REVISED STOCK NUMBER BY:JB 3/3/02 CK:MBW
REV "A" ADDED LIFTING LUGS & DETAIL BY:JB 10/31/02 CK:VM

Table I

The following chemicals do not attach or permeate high density crosslinkable polyethylene resins up to 100° F. Each application should be considered individually. All concentrations apply except where noted.

- Acetic Acid <1%
- Aluminum Salts
- Alum
- Ammonium Hydroxide
- Ammonium Salts
- Amyl Alcohol
- Antimony Salts
- Arsenic Acid
- Barium Hydroxide
- Benzene Sulfonic Acid <1%
- Bismuth Salts
- Boric Acid <10%
- Bromic Acid <10%
- Butanediol
- Butyl Alcohol
- Calcium Hydroxide
- Calcium Salts
- Chromic Acid<50%
- Citric Acid <1%
- Copper Salts
- Detergents
- Diazo Salts
- Diethyl Carbonate
- Diethanol Amine
- Diethylene Glycol
- Diglycolic Acid
- Dimethylamine
- Dimethyl Formamide
- Ethyl Alcohol
- Ethylene Glycol
- Ferric Salts
- Ferrous Salts
- Fluoboric Acid <5%
- Fluosilicic Acid
- Formic Acid <1%
- Gallic Acid
- Gluconic Acid
- Hexanol
- Hydrazone<35%
- Hydrozine Hydrochloride
- Hydriodic Acid
- Hydrobromic Acid
- Hydrochloric Acid
- Hydrofluoric Acid <5%
- Hydrofluorosilicic Acid <5%
- Hydrogen Peroxide<52%
- Hydrogen Phosphide
- Hydroquinone
- Hypochorous Acid
- Iodine Solutions
- Lactic Acid
- Latex
- Lead Acetate
- Magnesium Salts
- Mercuric Salts
- Mercurous Salts
- Mercury
- Methyl Alcohol
- Methylsulfuric Acid
- Michel Salts
- Nicotinic Acid
- Nitric Acid<50%
- Oxalic Acid <2%
- Perchloric Acid <1%
- Phenol<10%
- Potassium Hydroxide
- Potassium Salts
- Phosphoric Acid
- Photographic Solutions
- Propyl Alcohol
- Propylene Glycol
- Sea Water
- Selenic Acid <1%
- Sewage
- Silicic Acid
- Silver Salts
- Soap Solutions
- Sodium Ferricyanide
- Sodium Ferrocyanide
- Sodium Hydroxide
- [1]Sodium Hypochlorite<9%
- Sodium Salts
- Sodium Sulfonates
- Stanic Salts
- Stannous Salts
- Starch Solutions
- Stearic Acid
- [1]Sulfuric Acid <80%
- Sulfurous Acid
- Sugar Solution
  - Glucose
  - Lactose
  - Sucrose, etc.
- Tannic Acid
- Tanning Extracts
- Tartaric Acid
- Titinium Acid
- Toluene Sulfonic Acid
- Triethanolamine
- Urea
- Vinegar
- Wetting Agents
- Zinc Salts

[1]Concentrations above stated percentage require special considerations, contact factory for guidelines concerning these applications.

Table II

The following oils and organic chemicals do not attack HDXLPE resins. They will be absorbed into the wall of the tank; however, there should be no loss of chemical. Because of this absorption, no chemical other than the original should be stored in the tank as long as contamination may result as the absorbed oil is leached out. Storage at temperatures up to 100° F are possible provided the effects of the absorption on the properties of the tank are not prohibitive.

Fatty Acids	Mineral Oils	Animal Fats	Vegetable Oil
Butyric	Lube	Lard	Corn
Lauric	Transformer	Fish Oil	Coconut
Linoleic	Hydraulic	Musk Oil	Cottonseed
Oleic		Whale Oil	Olive
Palmitic			Peanut
Stearic			

Table III

The following organic chemicals do not attack high density crosslinkable polyethylene resins. They will be absorbed into the wall of tank and a permeation loss will occur. Because of this permeation and the effect it has on the physical properties of the tank, it is generally not recommended that these chemicals be storage at room temperatures above 100° F. However, their use largely depends on such factors as size of tank, its location, toxicity of the chemical, and applicable codes such as NFPA, OSHA, etc.

- Aniline
- Benzene
- Carbon Tetrachloride
- Chlorabenzene
- Cychohexanol
- Cycolchexnone
- Dibutylphthalate
- Diesel Fuel
- Dimethylamine
- Ethyl Butyrate
- Ethylene Chlorohydin
- Fuel Oil
- Futural
- Aliphatic Hydrocarbons (hexane, octane, hexene, octene, etc.)
- Jet Fuel
- Gasoline
- Nitrobenzene
- Octyl Cresol
- Propylene Dichloride
- Toluene
- Xylene

This document reports accurate and reliable information to the best of our knowledge, but no suggestions and recommendations cannot be guaranteed because the conditions of use are beyond our control. Information presented herein is given without reference to any patent questions which may be encountered in use thereof. Such questions should be investigated by those using this information. Poly Processing Company assumes no responsibility for the use of information presented herein and hereby disclaims all liability in regard to such use.

POLYPROCESSING COMPANY

Providing Solutions Through Innovation

Chemical Resistance

Chemical Resistance

Chemical "resistance" and "compatibility" are synonymous terms used in relation to the ability of a plastic to function in different environments. In regards to polyethylene chemical storage tanks, chemical resistance encompasses the total effect a product would have on a tank. The factors that make up the overall compatibility of a chemical to a rotomolded tank are (1) chemical attack, (2) absorption or permeation, and (3) solubility and stress crack resistance.

Chemical Attack

By definition, chemical attack involves an actual chemical reaction with the plastic. This can be a breaking of molecular chains and/or an addition of chemical groups to the molecule. For example, in the case of an oxidation reaction with polyethylene, both occur with the addition of carbonyl groups. This causes and eventual loss of properties to the point that a tank would not be serviceable.

Polyethylene in general is one of the most inert plastics available. Very few chemicals react with polyethylene and with those that do, the rate is relatively slow. The ultra high molecular weight characteristics of high density crosslinked polyethylene resins after crosslinking makes these particular polyethylenes even more resistant than other grades.

Permeation

This involves the physical absorption of the chemical into the polyethylene. If this is a volatile chemical, then an actual loss of the product can occur as the chemical vaporizes from the outer wall of the tank. The amount of absorption is generally limited to 3 to 7 percent by weight of the polyethylene. Also, the loss of volatile products is relatively small. For example, a 25-gallon tank with a 50-mil wall will only lose between 5 and 6 grams of gasoline per day due to permeation. The thicker the wall, the lower the rate of loss.

The absorption of a product into the wall of a tank will cause more property changes. The tensile strength is reduced approximately 15 to 20 percent and stiffness approximately 20 percent. Normally, this does not affect the utility of a tank or prohibit the application. The property losses due to permeation are offset by increasing the design wall thickness of the tank.

Elevated Temperature

The effects of elevated temperature (100° F or greater) on polyethylene tank are predictable and expected. Polyethylene, which is a flexible material, becomes even more flexible when heated. It will, therefore, bulge more at an elevated temperature than at room temperature.

By looking at the design hoop stress values for various temperatures, one can see the effects of increased temperature services. The values remain relatively constant up to 100° F, after which they begin to decrease.

100° F	600 psi	130° F	450 psi
110° F	550 psi	140° F	400 psi
120° F	500 psi	150° F	300 psi

A rise in temperature of 50° F (100° F to 150° F) reduces the design hoop stress value from 600 psi to 300 psi and doubles the required wall thickness. It follows that simply increasing the service rating of a tank from 1.35 S.G. to 1.65 S.G., or even to 1.90 S.G. is not necessarily sufficient. The proper wall thickness must be calculated for the temperature of service.

The maximum temperature rating for crosslinked polyethylene material is 150° F. Above that temperature the thermal stabilizers in the plastic are more rapidly consumed. Continued use will cause embrittlement and a reduction in the useful life of the part. Temperature services from 100° F to 150° F are acceptable applications, however, thicker tank walls are required to maintain a safe design. Consult the factory when application such as these arise.

Authorized Distributor:

Toll-Free 1-866-590-6845

www.polyprocessing.com

Table I

The following chemicals do not attach or permeate high density crosslinkable polyethylene resins up to 100° F. Each application should be considered individually. All concentrations apply except where noted.

Acetic Acid
Aluminum Salts
Alum
Ammonium Hydroxide
Ammonium Salts
Amyl Alcohol
Antimony Salts
Arsenic Acid
Barium Hydroxide
Benzene Sulfonic Acid
Bismuth Salts
Boric Acid
Bromic Acid
Butanediol
Butyl Alcohol
Calcium Hydroxide
Calcium Salts
Chromic Acid<50%
Citric Acid
Copper Salts
Detergents
Diazo Salts
Diethyl Carbonate
Diethanol Amine
Diethylene Glycol
Diglycolic Acid
Dimethylamine
Dimethyl Formamide
Ethyl Alcohol
Ethylene Glycol
Ferric Salts
Ferrous Salts
Fluoboric Acid
Fluosilicic Acid
Formic Acid
Gallic Acid
Gluconic Acid
Hexanol
Hydrazone<35%
Hydrozine Hydrochloride
Hydriodic Acid
Hydrobromic Acid
Hydrochloric Acid
Hydrofluoric Acid
Hydrofluorosilicic Acid
Hydrogen Peroxide<52%
Hydrogen Phosphide
Hydroquinone
Hypochorous Acid
Iodine Solutions
Lactic Acid
Latex
Lead Acetate
Magnesium Salts
Mercuric Salts
Mercurous Salts
Mercury
Methyl Alcohol
Methylsulfuric Acid
Michel Salts
Nicotinic Acid
Nitric Acid<50%
Oxalic Acid
Perchloric Acid
Phenol<10%
Potassium Hydroxide
Potassium Salts
Phosphoric Acid
Photographic Solutions
Propyl Alcohol
Propylene Glycol
Sea Water
Selenic Acid
Sewage
Silicic Acid
Silver Salts
Soap Solutions
Sodium Ferricyanide
Sodium Ferrocyanide
Sodium Hydroxide
[1]Sodium Hypochlorite<9%
Sodium Salts
Sodium Sulfonates
Stanic Salts
Stannous Salts
Starch Solutions
Stearic Acid
[1]Sulfuric Acid <80%
Sulfurous Acid
Sugar Solution
Glucose
Lactose
Sucrose, etc.
Tannic Acid
Tanning Extracts
Tartaric Acid
Titinium Acid
Toluene Sulfonic Acid
Triethanolamine
Urea
Vinegar
Wetting Agents
Zinc Salts

[1]Concentrations above stated percentage require special considerations, contact factory for guidelines concerning these applications.

Table II

The following oils and organic chemicals do not attack HDXLPE resins. They will be absorbed into the wall of the tank; however, there should be no loss of chemical. Because of this absorption, no chemical other than the original should be stored in the tank as long as contamination may result as the absorbed oil is leached out. Storage at temperatures up to 100° F are possible provided the effects of the absorption on the properties of the tank are not prohibitive.

Fatty Acids	**Mineral Oils**	**Animal Fats**	**Vegetable Oil**
Butyric	Lube	Lard	Corn
Lauric	Transformer	Fish Oil	Coconut
Linoleic	Hydraulic	Musk Oil	Cottonseed
Oleic		Whale Oil	Olive
Palmitic			Peanut
Stearic			

Table III

The following organic chemicals do not attack high density crosslinkable polyethylene resins. They will be absorbed into the wall of tank and a permeation loss will occur. Because of this permeation and the effect it has on the physical properties of the tank, it is generally not recommended that these chemicals be storage at room temperatures above 100° F. However, their use largely depends on such factors as size of tank, its location, toxicity of the chemical, and applicable codes such as NFPA, OSHA, etc.

Anitine
Benzene
Carbon Tetrachloride
Chlorabenzene
Cychohexanol
Cycolohexnone
Dibutylphthalate
Diesel Fuel
Dimethylamine
Ethyl Butyrate
Ethylene Chlorohydin
Fuel Oil
Fufural
Aliphatic Hydrocarbons (hexane, octane, hexene, octene, etc.)
Jet Fuel
Gasoline
Nitrobenzene
Octyl Cresol
Propylene Dichloride
Toluene
Xylene

This document reports accurate and reliable information to the best of our knowledge, but our suggestions and recommendations cannot be guaranteed because the conditions of use are beyond our control. Information presented herein is given without reference to any patent questions which may be encountered in use thereof. Such questions should be investigated by those using this information. Poly Processing Company assumes no responsibility for the use of information presented herein and hereby disclaims all liability in regard to such use.

OR-1000™ Tank Systems!

Specify Peace of Mind!

NSF/ANSI 61

- **OR-1000™ Engineered System**
- **4 Times Antioxidants**
- **Certified for 31+ Hazardous and Corrosive Chemical Applications**
- **Design Temperatures to 140°F**
- **Complies with State Regulations**

Provide Longer Tank Life with an IMFO®/OR-1000™ System!

Increase Tank Longevity!

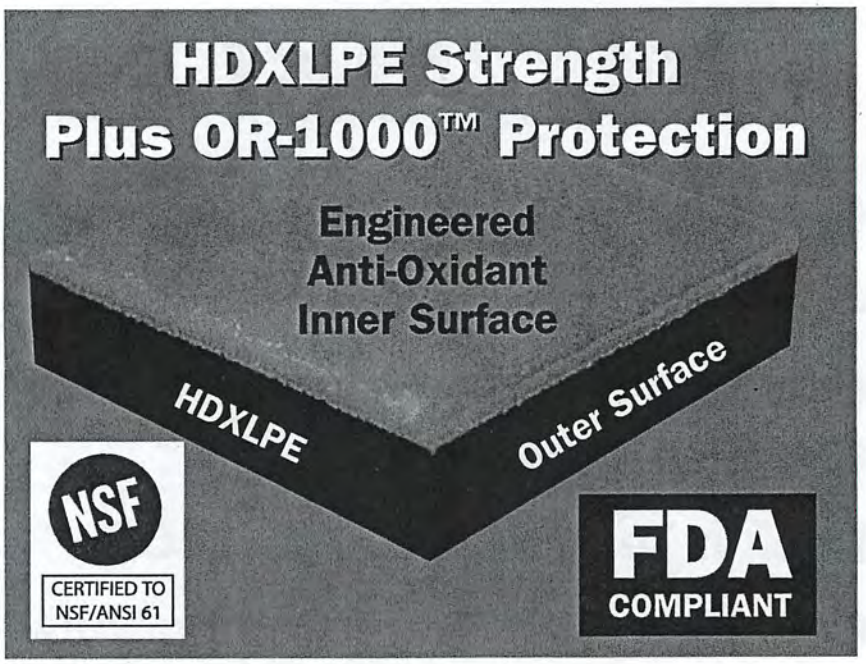

- Proven System since 1995
- Increased Chemical Resistance
- Complete Drain
- Maintenance Free
- Avoids Confined-Space Entry
- 4x Anti-Oxidant Package
- Sodium Hypochlorite/Sulfuric Acid/ Hydrochloric Acid applications*

*See warranty information on page 26

POLYPROCESSING COMPANY
Providing Solutions Through Innovation

Storage Solution: OR-1000 Liner

Poly Processing Company is the only rotational molding company with the ability to provide the strength, durability and safety of HDXLPE with the added value of an oxidation resistant liner, OR-1000, integrally molded as the interior surface of the part.

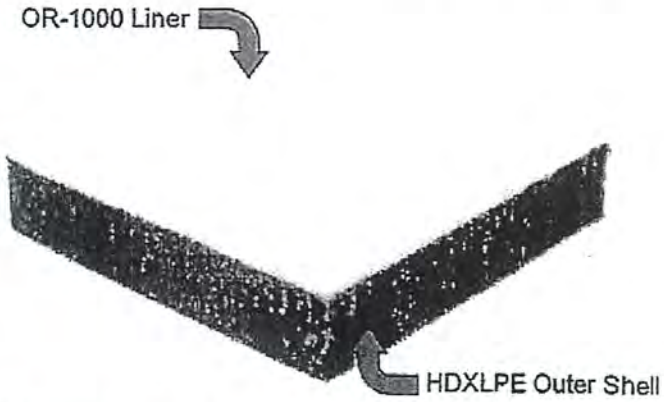

The liner thickness is in addition to the ASTM design thickness of the HDXLPE outer shell for the intended chemical application. This crosslink / OR-1000 combination has been successfully used for Sodium Hypochlorite and Sulfuric Acid services since 1995. To even further enhance the value of this combination, we are now adding this lining to the new high performance Metallocene High Density Crosslinked resin.

The reason for the OR-1000 material is simple. To develop the outstanding long-term properties of HDXLPE, the amount of anti-oxidants must be limited. Although HDXLPE has superior properties to any other rotational mold grade polyethylene, in a few highly oxidizing chemical applications, its optimum service life has not been obtained. To capitalize on the superior properties and performance characteristics of HDXLPE, the OR-1000 liner was developed to serve as an oxidation barrier to improve service life in oxidizing chemical applications. This combination provides unmatched performance and value to our customers.

Sodium Hypochlorite and Sulfuric Acid remain very difficult storage and handling applications. However, we continue to bring you the very best in value, service and high performance products -- Poly Processing Company, *providing solutions through innovation.*

CERTIFIED ISO 9001

member

THE CHLORINE INSTITUTE, INC.
member

Authorized Distributor:

1-866-590-6845
www.polyprocessing.com

Rev. 3/2001

POLYPROCESSING COMPANY

Providing Solutions Through Innovation

Polyethylene Tank Life Expectancy

For 35 years, Poly Processing Company has been **Helping Our Customers . . . Solve Problems** associated with storing hazardous chemicals, **Managing Risk** with the Environment and Employee Safety and **Growing Their Profits** with Increased Tank Longevity and Operating Efficiencies. We have specialized in providing hazardous chemical storage solutions to the industrial, water and waste water markets. While we manufacture both linear and crosslink polyethylene storage tanks; in **hazardous chemical environments, crosslink polyethylene** is the material of choice. Our customers report crosslink polyethylene tanks providing service for 10+ years with 15 to 20 years of tank service being common. However; there are many factors and variables that have an effect on the useful life of any tank including polyethylene.

Chemical, Concentration and Temperature: The chemical, concentration and operating temperature are all factors influencing the life expectancy of a polyethylene tank. For example, high concentrations of Sulfuric Acid are stress cracking agents and are more aggressive oxidizers than less concentrated chemicals such as 25% Caustic Soda. For this reason, Poly Processing offers our customers the OR-1000™ Anti-Oxidant Systems. Another example: 12% Sodium Hypochlorite will degrade from UV exposure and elevated temperatures. As it degrades, sediment builds in the bottom of the tank leading to a shorter tank life. To eliminate this sludge buildup, Poly Processing Company offers our customers the IMFO® (Integrally Molded Flanged Outlet). The IMFO® design promotes continuous "system" flushing increasing tank life and operating efficiencies. Poly Processing Company chemical storage tanks are constructed from premium materials and designed specifically for the chemical, concentration and temperature requirements.

Installation and Piping: The single biggest reason for tank life reduction is improper tank installation and **"hard"** piping. Polyethylene's broad spectrum of chemical resistance vs. other materials of construction is based on its ability to expand and contract. Flexible connections compensate for tank expansion and contraction promoting a longer useful life. It is important to follow Poly Processing Company's Installation Manual Instructions during the installation process.

Venting: Often overlooked, venting is a very important step that promotes tank longevity. Polyethylene tanks are rated at atmospheric pressure/vacuum. Adequate vent size is always based on flow and delivery rates so it is important to gather the following information to adequately determine the proper venting requirements:

1) Is the tank to be filled pneumatically?
2) Is the tank to be vented to atmosphere?
3) Does the length of the vent exceed 3 feet (piped to a central vent system)
4) Is a fume scrubbing system to be used?
5) Are vent screens to be used (restricts flow)?
6) Does the tank manufacturer offer a method of "emergency venting" to prevent over-pressurization?

Other Items Effecting Tank Longevity:

1) Continuous cycling (fill / discharge)
2) Excessive agitation
3) Mobile applications

For further information about your specific needs or applications, please contact Poly Processing Company at 1-866-590-6845 or visit our website at www.polyprocessing.com.

POLYPROCESSING
Providing Solutions Through Innovation

Chemical Resistance

Chemical Resistance

Chemical "resistance" and "compatibility" are synonymous terms used in relation to the ability of a plastic to function in different environments. In regards to polyethylene chemical storage tanks, chemical resistance encompasses the total effect a product would have on a tank. The factors that make up the overall compatibility of a chemical to a rotomolded tank are (1) chemical attack, (2) absorption or permeation, and (3) solubility and stress crack resistance.

Chemical Attack

By definition, chemical attack involves an actual chemical reaction with the plastic. This can be a breaking of molecular chains and/or an addition of chemical groups to the molecule. For example, in the case of an oxidation reaction with polyethylene, both occur with the addition of carbonyl groups. This causes and eventual loss of properties to the point that a tank would not be serviceable.

Polyethylene in general is one of the most inert plastics available. Very few chemicals react with polyethylene and with those that do, the rate is relatively slow. The ultra high molecular weight characteristics of high density crosslinked polyethylene resins after crosslinking makes these particular polyethylenes even more resistant than other grades.

Permeation

This involves the physical absorption of the chemical into the polyethylene. If this is a volatile chemical, then an actual loss of the product can occur as the chemical vaporizes from the outer wall of the tank. The amount of absorption is generally limited to 3 to 7 percent by weight of the polyethylene. Also, the loss of volatile products is relatively small. For example, a 25-gallon tank with a 50-mil wall will only lose between 5 and 6 grams of gasoline per day due to permeation. The thicker the wall, the lower the rate of loss.

The absorption of a product into the wall of a tank will cause more property changes. The tensile strength is reduced approximately 15 to 20 percent and stiffness approximately 20 percent. Normally, this does not affect the utility of a tank or prohibit the application. The property losses due to permeation are offset by increasing the design wall thickness of the tank.

Elevated Temperature

The effects of elevated temperature (100° F or greater) on polyethylene tank are predictable and expected. Polyethylene, which is a flexible material, becomes even more flexible when heated. It will, therefore, bulge more at an elevated temperature than at room temperature.

By looking at the design hoop stress values for various temperatures, one can see the effects of increased temperature services. The values remain relatively constant up to 100° F, after which they begin to decrease.

100° F	600 psi	130° F	450 psi
110° F	550 psi	140° F	400 psi
120° F	500 psi	150° F	300 psi

A rise in temperature of 50° F (100° F to 150° F) reduces the design hoop stress value from 600 psi to 300 psi and doubles the required wall thickness. It follows that simply increasing the service rating of a tank from 1.35 S.G. to 1.65 S.G., or even to 1.90 S.G. is not necessarily sufficient. The proper wall thickness must be calculated for the temperature of service.

The maximum temperature rating for crosslinked polyethylene material is 150° F. Above that temperature the thermal stabilizers in the plastic are more rapidly consumed. Continued use will cause embrittlement and a reduction in the useful life of the part. Temperature services from 100° F to 150° F are acceptable applications, however, thicker tank walls are required to maintain a safe design. Consult the factory when application such as these arise.

Authorized Distributor:

Toll-Free 1-866-590-6845
www.polyprocessing.com

Crosslinked Polyethylene with OR-1000™ System
The #1 System for Oxidizing Chemical Environments

Poly Processing Company and other polyethylene tank manufacturers, as well as major polyethylene resin manufacturers have published many documents over the past several years discussing the benefits of certain rotational molding resins in acidic and alkaline chemical environments. The majority of these documents support the use of crosslinked polyethylene over linear polyethylene in acidic and basic chemical environments. These articles speak to the longevity of crosslinked polyethylene rotationally molded tanks, the safety of having polymer chains that are chemically bonded, and the leveraged investment of knowing that crosslinked polyethylene chemical storage tanks have been utilized for the last 35 years.

In 2001, one of the largest resin manufacturers in North America published a fairly extensive study which showed that their linear polyethylene in a lab environment performed as well as, if not better than crosslinked polyethylene, in acidic and alkaline chemical applications. This study, coupled with marketing efforts by linear polyethylene tank manufacturers who do not rotationally mold crosslinked polyethylene tanks in the course of their normal business, has given rise to some industry confusion and misunderstanding about what is the best resin system for storing oxidizing chemicals. We will summarize the facts about rotationally molded polyethylene storage tanks and the value of an engineered antioxidant resin system coupled with the long-term performance of crosslinked polyethylene.

We would first like to discuss the lab study performed by the linear resin manufacturer. The study compared crosslinked polyethylene with linear polyethylene in sulphuric acid and sodium hypochlorite environments. The sulphuric acid was concentrated approximately 93%-97%, and the Sodium Hypochlorite was around 14% concentration. The lab study describes how the crosslinked polyethylene and linear polyethylene were submersed in the chemicals and then tested using ARM Impact testing as well as Environmental Stress Crack Resistivity (ESCR) testing. The study concluded that the linear materials in a chemical resistivity mode held up as well as crosslinked materials in a lab environment. In addition, Higher ESCR properties are found in lower density materials like LLDPE or LDPE as compared to HDPE resins. It doesn't mean you want to use a tank made only from the lower density resins. ESCR shows how well the material performs in a pre-notched condition in the presence of certain chemicals.

The lab study performed by the resin manufacturer did not cover or discuss the long-term properties of these materials in harsh, environmental conditions. Over time, sodium hypochlorite and sulphuric acid create an oxidative environment, which remove hydrogen molecules from the polymer chains creating embrittlement. This phenomenon is inherent to all types of polyethylene, since they are hydrocarbon based molecules. Storing acids and bases in actual everyday environments presents a completely different set of parameters and stresses that have little to do with the lab environment.

Poly Processing Company has been aware of this relationship between ESCR and Chemical resistance for many years and has been an industry leader in creating engineered resin systems which give the end user the ability to have excellent oxidation and chemical resistivity without sacrificing long term performance and toughness. These engineered resin systems deliver peace of mind, a margin of safety, and leveraged investment to the end user.

Another critical factor to consider when storing acids and bases in actual everyday environments is the Long Term Hydrostatic Strength (LTHS) of the polyethylene. LTHS properties are one of the keys to providing the continued strength necessary for tanks during its service life. This property is especially important in field applications where tanks can see elevated temperatures approaching

140°F. LTHS tests are conducted at both ambient temperature (73°F) and at elevated temperature (140°F) since actual field conditions are typically in this range.
Figure 1.

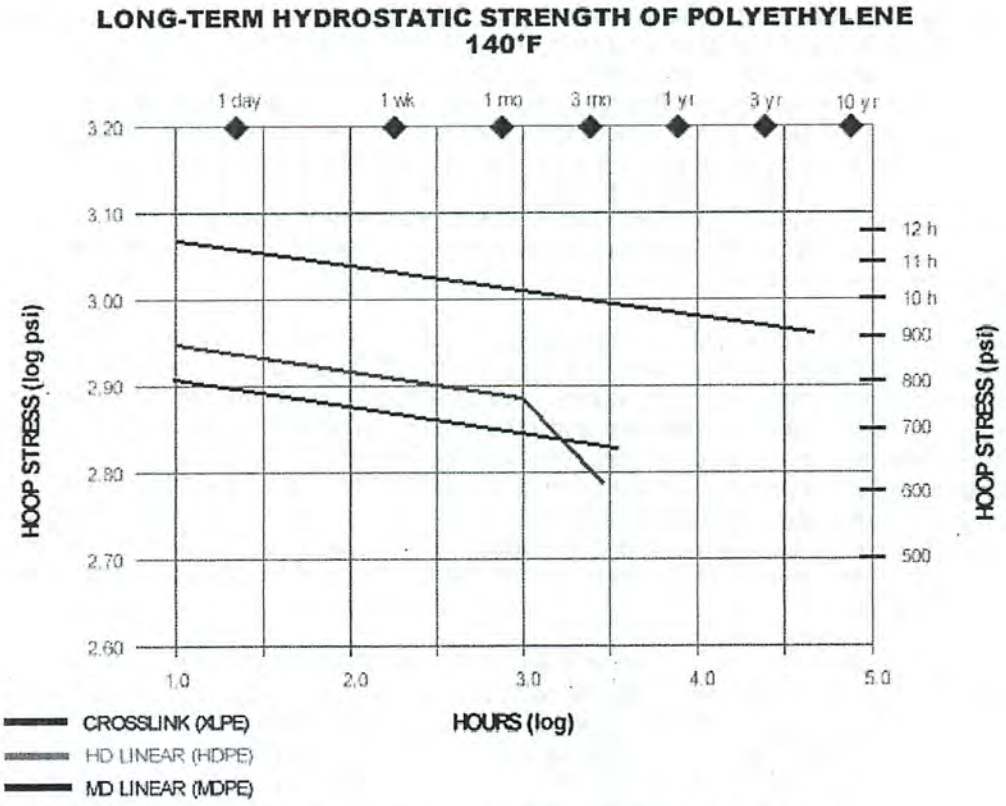

Source: Chevron Phillips Company, Plastics Technical Center

The rapid deterioration in properties is indicated by a "knee" in the curve of hoop strength versus time as illustrated in Figure 1 above. Even high performance HDPE will develop a LTHS knee at around 1000 hours (log 3), and some MDPE products will have a knee in less than 10,000 hours (log 5). This type of performance substantially reduces the expected long-term performance at elevated temperatures. Crosslinked polyethylene has been tested to 50,000 hours at 140°F and shows no signs of a knee.

There is still the need to surround the oxidation resistant material with a robust resin system that will give you longer useful tank life, superior impact resistance, and greater tensile strength for a safer product. That is why crosslinked polyethylene is still the material of choice for industrial and municipal chemical applications.

Poly Processing Company has been the leader in rotationally molded crosslinked polyethylene storage tanks for 35 years. We work with the leading universities in the country to develop engineered resin systems that will perform above and beyond any standard "off the shelf" polyethylene in harsh, oxidizing environments. One of the systems we developed is the OR-1000™ system. This system uses the best linear resin for chemical resistivity combined with four (4) times the antioxidant power and a crosslink outer wall for maximum long-term performance and durability.

Poly Processing Company developed the OR-1000™ oxidation resistance system in 1995. This lower density linear material serves to increase the service life of crosslinked polyethylene tanks in oxidizing chemical service (Sodium Hypochlorite, Sulphuric Acid, Hydrochloric Acid, and Nitric Acid). To develop the outstanding long-term physical properties of crosslinked polyethylene, the amount of antioxidant compounded into the material has to be limited. Although crosslinked polyethylene has superior properties to any other rotational molding grade polyethylene, the tank's useful service life will be reduced without the OR-1000™ system. In order to utilize the superior properties of crosslinked polyethylene, the OR-1000™ system was developed to greatly improve the service life in harsh oxidizing chemical environments. This material is a medium density linear based resin with a large amount of antioxidant added to it for the best oxidizing resistance system in the industry. The OR-1000™ system has been engineered to prevent de-lamination during the useful life of the tank.

To compare the effect of oxidizing chemicals on the OR-1000™ system and crosslinked polyethylene, 1/8" thick tensile bars of both OR-1000™ and crosslinked polyethylene were submerged in a manufacturer's storage tank. This tank handled a highly oxidizing chemical, 17% Sodium Hypochlorite, and was emptied and filled at least once a day. Every 30 days, samples were pulled and tensile and percent elongation was determined as well as ESCR tests. Oxidization or reduction in physical properties is indicated by reduced in elongation. After six months of testing, the elongation of the crosslinked polyethylene tensile bars had decreased 26% while OR-1000™ elongation had no change. This is due to the added antioxidant in the OR-1000™ system as well as the fact that the linear material used in the testing was a lower density material than the crosslinked material.

Crosslinked polyethylene provides superior environmental stress cracking resistance (ESCR) or sometimes generally referred to as resistance to slow crack growth (SCG) in almost all chemical applications. Two tests which clearly show this difference are the bent strip ESCR (ASTM D1693) with 10% Igepal where crosslink polyethylene does not fail in over 1000 hours compared to typical values for LMDPE of <400 hours. Another test which shows the slow crack growth difference with no surfactant (in air) is the polyethylene notch test (PENT) described in ASTM F 1473 and crosslink polyethylene again does not fail in over 1000 hours and LMDPE grades fail in <100 hours. Even though linear polyethylene grades with improved ESCR have become available over the past 10 to 15 years, they still do not match crosslinked polyethylene in SCG performance. Slow crack growth resistance as was shown earlier in this paper is an important property that can affect the long-term performance of tanks.

The best of both worlds is having the OR-1000™ system for the long-term oxidative resistivity characteristics (as discussed in the resin manufacturer's lab study), with the robustness of crosslinked polyethylene for the long-term durability and long useful life that is expected of industrial grade chemical storage tanks. This is why so many chemical manufacturers and distributors choose Poly Processing Company for engineered chemical storage solutions.

Crosslinked polyethylene tanks with the OR-1000™ system varying in sizes from 500 gallons to 14,950 gallons have been in true industrial and municipal use for over 10 years with excellent results. Poly Processing Company backs every crosslinked polyethylene tank with the OR-1000™ system with a 5 year full warranty on all suitable applications including sodium hypochlorite and hydrochloric acid, sulfuric acid 80%-98% carries a full 3 year warranty

Store your harsh oxidizing chemicals with the confidence and peace of mind that you deserve. Specify Poly Processing Company's crosslinked polyethylene tanks with the OR-1000™ system for longevity, safety, and leveraged investment. Please consult your distributor or Poly Processing Company at 1-866-590-6845 for your specific requirements.

tobeywade
STRUCTURAL ENGINEERS

May 6, 2010
Project No. R115-07-08

Mr. Aubry Burgess, Maintenance Supervisor
PHILIP SERVICES CORPORATION
ENVIRONMENTAL SERVICES DIVISION
2095 Newlands Drive East
Fernley, NV 89408

RE: TANK 201 CERTIFICATION REPORT

Dear Mr. Burgess:

In accordance with the Fernley Facility Amended Tank Replacement plan as prepared by Philip Services Corporation (PSC) and dated March 25, 2008, each tank is required to be certified by Independent Registered Professional Engineers (IRPE's) prior to being placed into service. This report has been prepared to document the evaluations as performed by Tobey-Wade Consulting.

Background

Tank 201 is a Crosslinked Polyethethylene Tank with a 6,250 gallon capacity as manufactured by Poly Processing Company. Poly Processing has provided data relative to the tank's strength and its chemical resistance capabilities. Poly Processing has also provided an opinion as to any offsets observed in the tank shell.

Schiff Associates has evaluated the tank's suitability and compatibility for its proposed use in PSC's facility. Their conclusions have been provided under separate cover to PSC.

Findings

Based on our research, analysis and structural observations, the following systems are in compliance with the Amended Tank Replacement plan:

- Tank 201 is situated on a reinforced concrete foundation system which is capable of adequately supporting the tank and its contents under static and dynamic conditions.
- Tank 201 is located in an area with sufficient secondary containment as required by 40 CFR Ch. I, 264.193.
- Tank 201 is stabile against overturning when subjected to loads based on 2006 International Building Code level seismic events.

NEVADA OFFICE
329 FLINT STREET ■ RENO, NEVADA 89501 ■ TEL: (775) 324.7757 ■ FAX: (775) 324.7797

- Tank 201 is anchored to prevent sliding when subjected to loads based on 2006 International Building Code (IBC) level seismic events. Structural Observation and Special Inspection of the anchorage system has been performed as required by the IBC. The Structural Observation and Special Inspection reports are attached.

- Tank 201 has been tested for leakage and found to be watertight. The Tank Leakage Test report is attached.

- The exterior of Tank 201's shell wall has been inspected and found to be generally undamaged. The Tank Shell Inspection report is attached.

Structural Observation, tank leakage inspections and tank shell inspections were performed by Tobey-Wade Consulting under my direct supervision. Special Inspections were performed by ICC-certified inspectors from Black Eagle Consulting based on anchorage requirements provided by Tobey-Wade Consulting.

Certification Statement

I certify under penalty of law that this report and all attachments were prepared under my direction and supervision in accordance with a system developed to assure that qualified personnel properly gather and evaluate the information submitted. Based on my inquiry of the person or persons who manage the system or those persons directly responsible for gathering the information, the information, submitted is, to the best of my knowledge and belief, true, accurate, and complete. I am aware that there are significant penalties for submitting false information, including the possibility of fines and imprisonment for knowing violations.

This report has been prepared in accordance with acceptable engineering practices and is subject to the assumptions and limitations stated in the report. Also note that this certification covers the aforementioned aspects of Tank 201 only.

Please feel free to contact me at your convenience should you have any questions relating to our findings.

Sincerely,
TOBEY-WADE CONSULTING

Terrence R. Tobey

Terrence R. Tobey, S.E.
Principal Structural Engineer

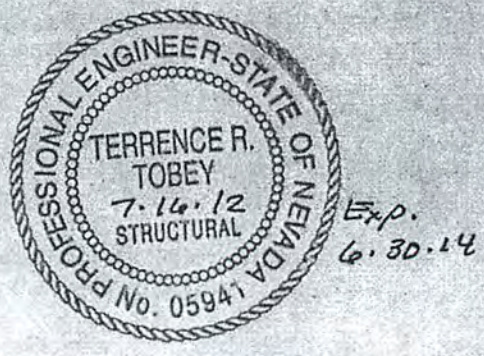

NON-CONTROLLED COPY
INFORMATION SUBJECT TO CHANGE WITHOUT NOTICE
VERIFY REV LEVEL OF PAPER COPY WITH REV LEVEL ON PPC WEB SITE

Proposed Storage Tank

NOZZLE SCHEDULE & ACCESSORIES						
SERVICE	MK	STOCK NO.	SIZE	FITTING	DEG	ELEV

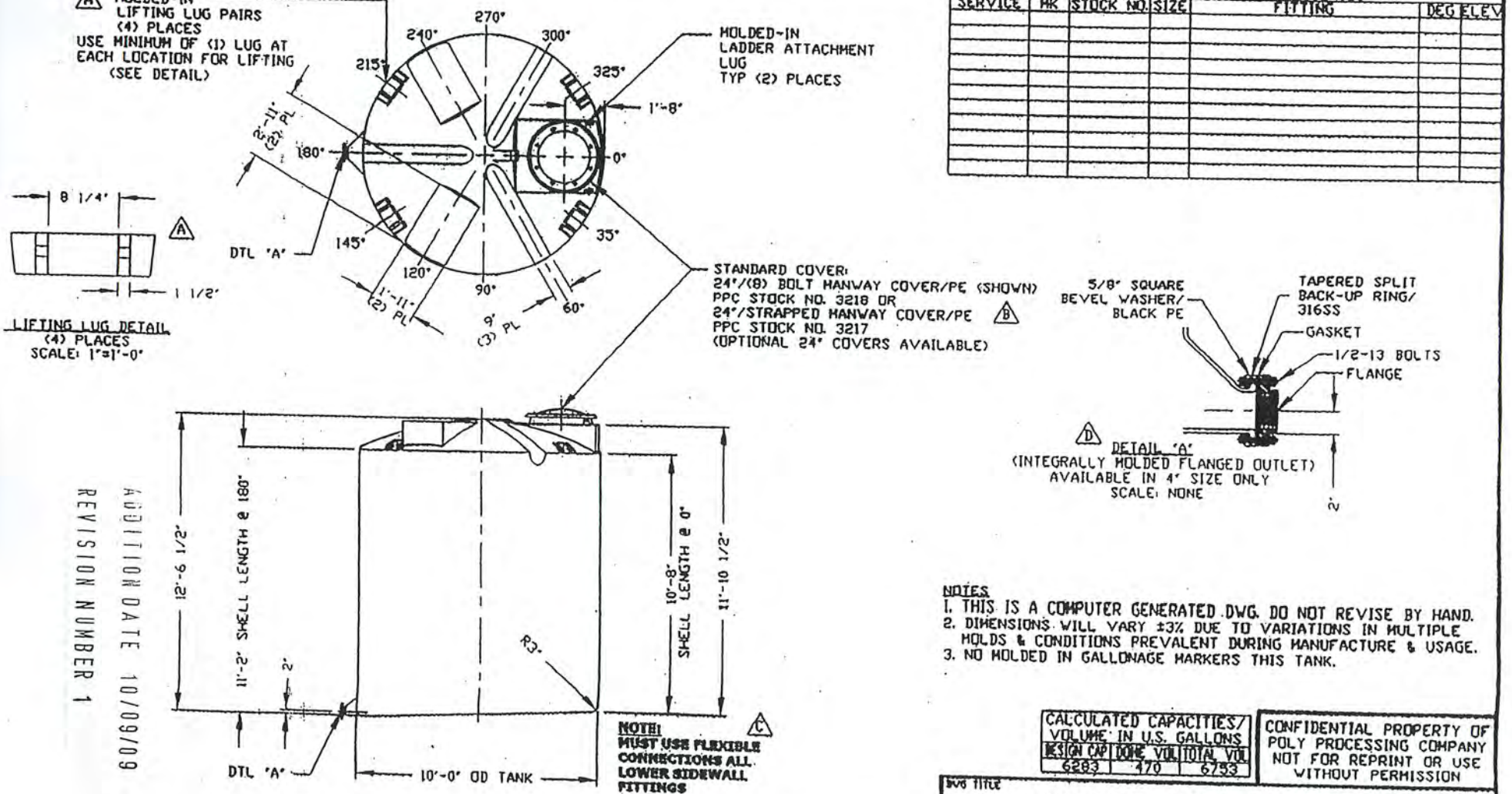

NOTES
1. THIS IS A COMPUTER GENERATED DWG. DO NOT REVISE BY HAND.
2. DIMENSIONS WILL VARY ±3% DUE TO VARIATIONS IN MULTIPLE MOLDS & CONDITIONS PREVALENT DURING MANUFACTURE & USAGE.
3. NO MOLDED IN GALLONAGE MARKERS THIS TANK.

CALCULATED CAPACITIES/ VOLUME IN U.S. GALLONS		
MAXIMUM CAP	DOME VOL	TOTAL VOL
6283	470	6753

CONFIDENTIAL PROPERTY OF POLY PROCESSING COMPANY NOT FOR REPRINT OR USE WITHOUT PERMISSION

DWG TITLE: 6250 GALLON SLOPE BOTTOM IMFO TANK

SCALE: 1/4"=1'-0" | DATE: 3/17/00 | PolyProcessing Company | Western Region | BY: HB WILKERSON | CK: D. RECTOR

SHEET: 1 OF 1 | COMPUTER FILE: 11206250 | REV: F

REVISION NUMBER 1

ADDITION DATE 10/09/09

REV "E" REVISED FOR MOLD MODIFICATIONS BY:JB 6/16/033 CK:WH
REV "D" REVISED IMFO STYLE BY:JB 4/30/03 CK:WH
REV "C" ADDED FITTING NOTE BY:JB 3/3/02 CK:HBW
REV "B" REVISED STOCK NUMBER BY:JB 3/3/02 CK:HBW
REV "A" ADDED LIFTING LUGS & DETAIL BY:JB 10/31/02 CK:WH

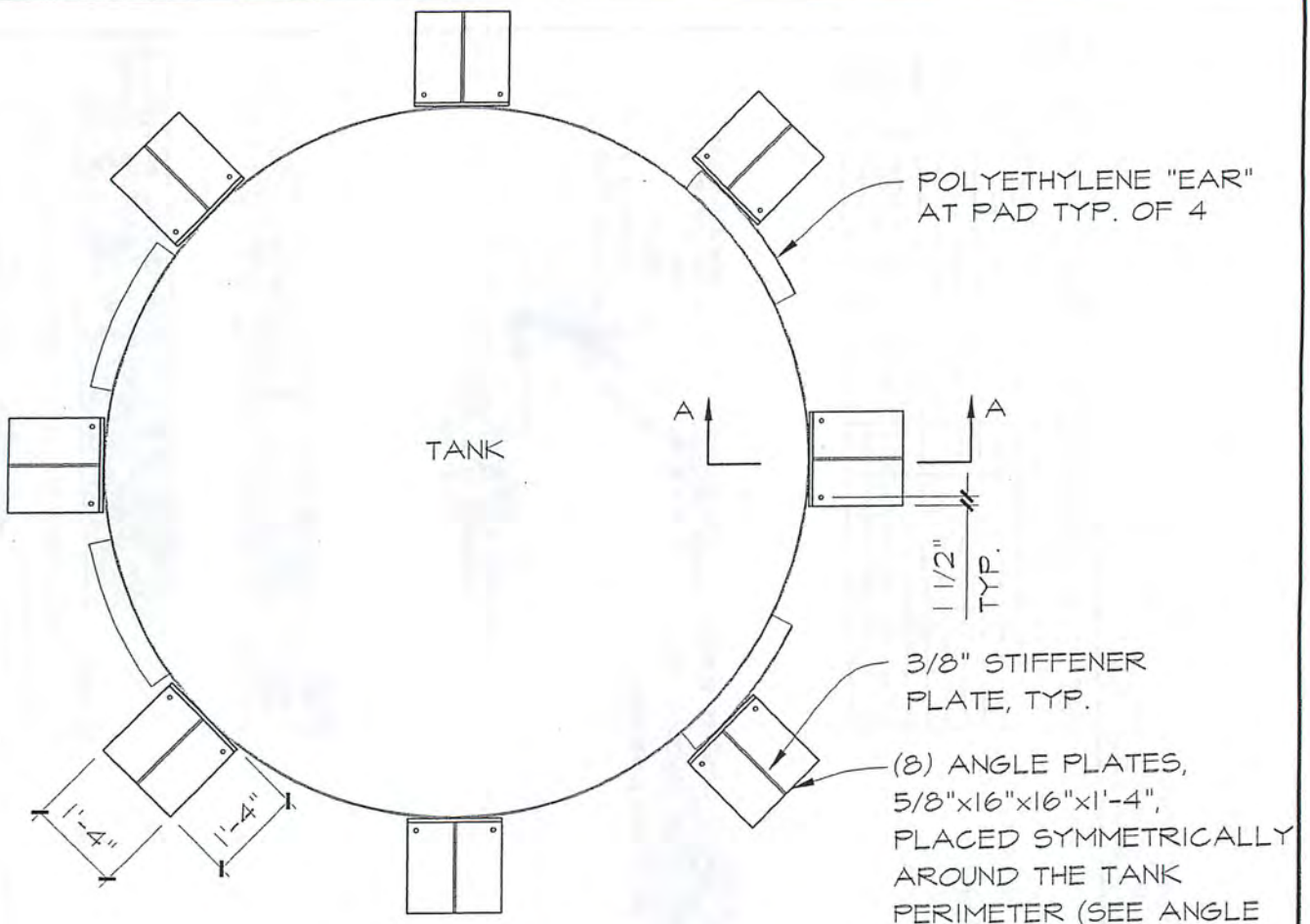

TANK NO's 201 - 208
CYLINDRICAL FLAT BOTTOM TANK

SCALE: 3/8"=1'-0"

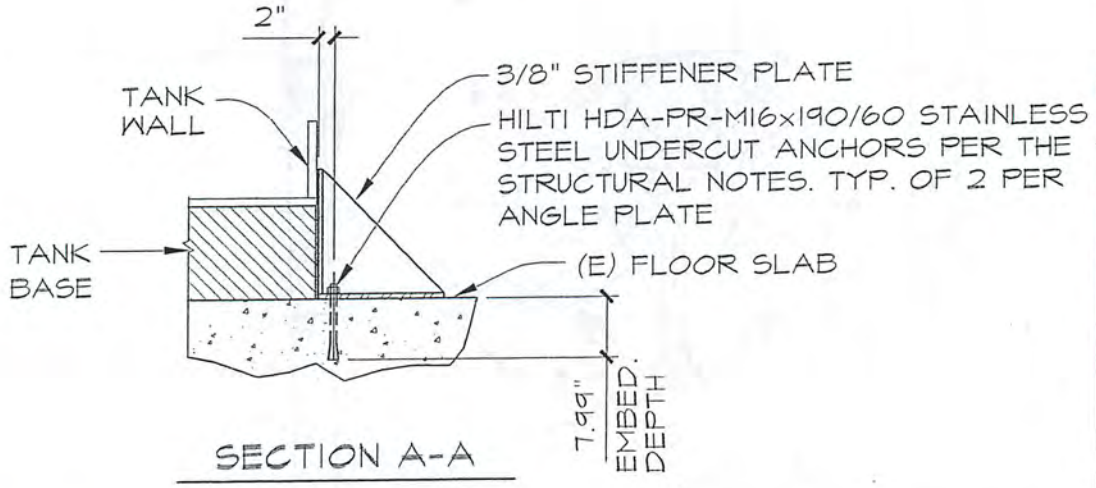

SECTION A-A

N.T.S.

tobey **wade**
CONSULTING
329 Flint Street
Reno, Nevada 89501
Tel. (775) 324-7757 Fax (775) 324-7797

PHILIP SERVICES CORPORATION
FERNLEY FACILITY
TANK NO's 201-208
ANCHORAGE DETAILS
FERNLEY, NEVADA

Project No.
R115-07-08

ADDITION DATE 10/09/09
Date: OCT. 5, 2009

REVISION NUMBER 1

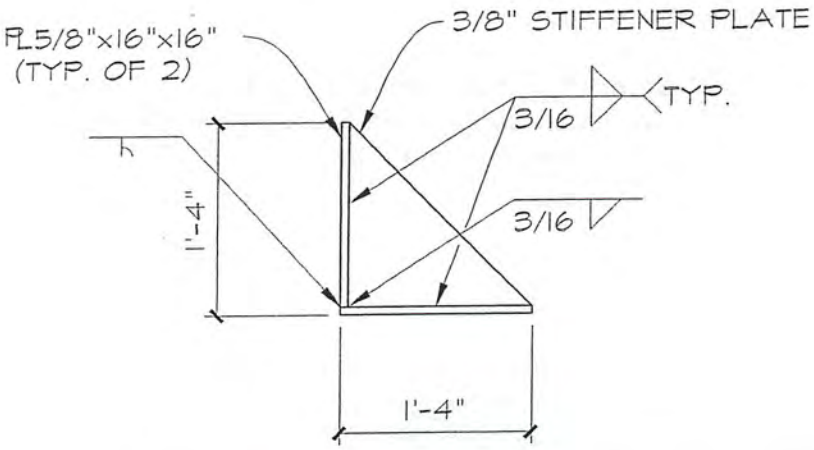

ANGLE PLATE DETAIL

SCALE: 3/4"=1'-0"

tobey **wade**
CONSULTING
329 Flint Street
Reno, Nevada 89501
Tel. (775) 324-7757 Fax (775) 324-7797

PHILIP SERVICES CORPORATION
FERNLEY FACILITY
TANK NO's 201-208
ANCHORAGE DETAILS
FERNLEY, NEVADA

Project No.
R115-07-08

Date: OCT. 5, 2009

REVISION DATE 10/09/09
REVISION NUMBER 1

SCHIFF ASSOCIATES
FIFTY YEARS OF PROFESSIONALISM

gbell@schiffassociates.com

www.schiffassociates.com
Consulting Corrosion Engineers – Since 1959

October 6, 2009 via email to: Burgess, Aubry [ABurgess@pscnow.com]

PSC ENVIRONMENTAL SERVICES
2095 Newlands Drive E
Fernley, NV 89408

Attention: Mr. Aubry Burgess
Maintenance Supervisor

Re: **Material Compatibility/Corrosion Certification Letter for PLANNED Tank 202 for Cyanide/Alkaline Storage Tanks**
Amended Tank Replacement Plan
Fernley, NV
SA#08-1383LGL

Dear Mr. Burgess:

We have conducted the following investigations and research relative to the suitability and compatibility of the 6,250 Gallon sloped bottom High Density Polyethylene (HDPE) tanks fabricated by PolyProcessing with OR-1000™ lining system for cyanide/alkaline storage at ambient temperatures:

1) Reviewed PolyProcessing Company's product information provided on tank design and compatibility.

2) Conducted independent research on compatibility of high density cross-linked rotationally molded polyethylene for service at ambient temperature.

3) Visited the PSC facility in Fernley in December 2008 and March 2009 to understand the anticipated process flow and conditions of waste streams at the site.

4) Reviewed supplemental information requested from PolyProcessing Company regarding issues identified during site visit.

The tank design is suitable for cyanide/alkaline storage at ambient temperatures per the manufacturer's information in the position as Tank 202 in the waste processing stream of the PSC Facility as configured and intended per the Amended Tank Replacement Program outlined in the letter from Thomas Nelson of PSC to Nevada Division of Environmental Protection dated March 25, 2008.

ADDITION DATE 10/09/09

REVISION NUMBER 1

CERTIFICATION

I certify under penalty of law that this document and all attachments were prepared under my direction or supervision according to a system designed to assure that qualified personnel properly gather and evaluate the information submitted. Based on my inquiry of the person or persons who manage the system, or those persons directly for gathering the information, the information submitted is, to the best of my knowledge and belief, true, accurate, and complete. I am aware that there are significant penalties for submitting false information, including the possibility of fine and imprisonment for knowing violations.

CLOSURE

Our services have been performed with the usual thoroughness and competence of the engineering profession. No other warranty or representation, either expressed or implied, is included or intended.

Sincerely,
SCHIFF ASSOCIATES

GRAHAM E.C. BELL
EXP: 12-31-10
MECHANICAL

Graham E.C. Bell, PE
Principal Engineer
NACE International Corrosion Specialist #5350

Attachments: Proposed Storage Tank Drawing
Waste Information Provided by PSC on PolyProcessing Data Sheet
PolyProcessing Technical Bulletin, Chemical Resistance Technical Information
OR-1000 Tank Cut Sheet
OR-1000 Cut Sheet
OR-1000 Product Sheet
PolyProcessing Polyethylene Tank Life Expectancy
PolyProcessing Chemical Compatibility Data including Temperature Dependence
PolyProcessing Technical Bulletin, Crosslinked Polyethylene with OR-1000™ System, Dated June 2005, Rev. A

NON-CONTROLLED COPY
INFORMATION SUBJECT TO CHANGE WITHOUT NOTICE
VERIFY REV LEVEL OF PAPER COPY WITH REV LEVEL ON PPC WEB SITE

Proposed Storage Tank

NOZZLE SCHEDULE & ACCESSORIES						
SERVICE	MK	STOCK NO.	SIZE	FITTING	DEG	ELEV

A MOLDED-IN LIFTING LUG PAIRS (4) PLACES
USE MINIMUM OF (1) LUG AT EACH LOCATION FOR LIFTING (SEE DETAIL)

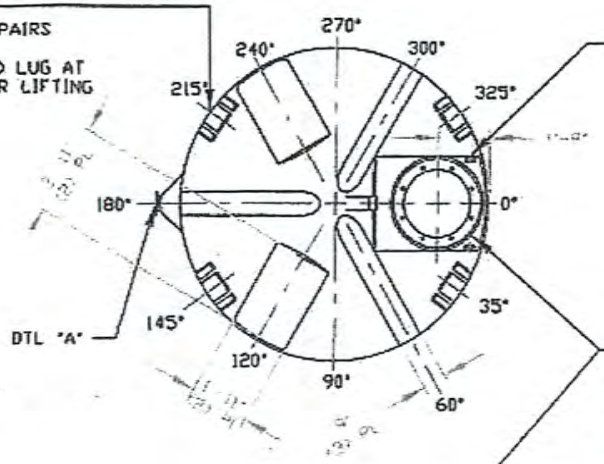

MOLDED-IN LADDER ATTACHMENT LUG TYP (2) PLACES

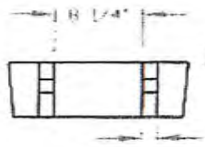

A LIFTING LUG DETAIL (4) PLACES
SCALE: 1"=1'-0"

STANDARD COVER:
24"/(8) BOLT MANWAY COVER/PE (SHOWN)
PPC STOCK NO. 3218 OR
24"/STRAPPED MANWAY COVER/PE
PPC STOCK NO. 3217
(OPTIONAL 24" COVERS AVAILABLE)

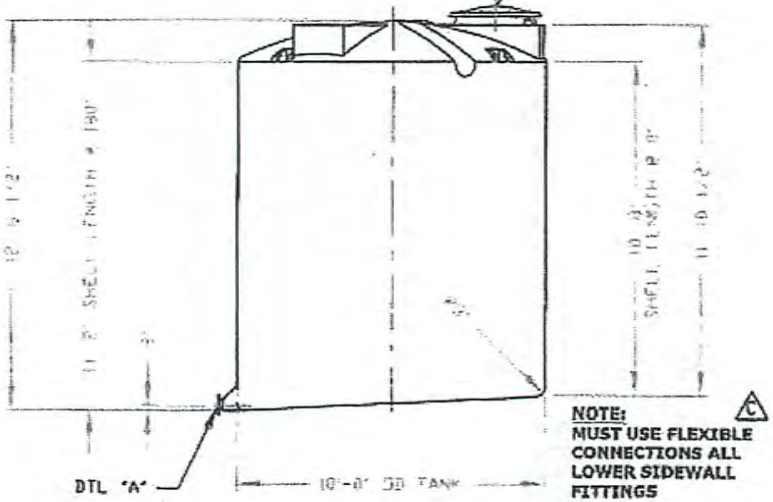

C NOTE: MUST USE FLEXIBLE CONNECTIONS ALL LOWER SIDEWALL FITTINGS

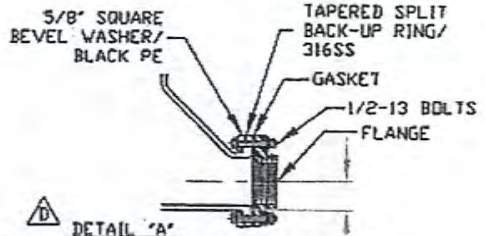

D DETAIL "A"
(INTEGRALLY MOLDED FLANGED OUTLET)
AVAILABLE IN 4" SIZE ONLY
SCALE: NONE

NOTES
1. THIS IS A COMPUTER GENERATED DWG. DO NOT REVISE BY HAND.
2. DIMENSIONS WILL VARY ±3% DUE TO VARIATIONS IN MULTIPLE MOLDS & CONDITIONS PREVALENT DURING MANUFACTURE & USAGE.
3. NO MOLDED IN GALLONAGE MARKERS THIS TANK.

CALCULATED CAPACITIES/ VOLUME IN U.S. GALLONS		
DESIGN CAP	DOME VOL	TOTAL VOL
6283	470	6753

CONFIDENTIAL PROPERTY OF POLY PROCESSING COMPANY NOT FOR REPRINT OR USE WITHOUT PERMISSION

DWG TITLE: 6250 GALLON SLOPE BOTTOM IMFO TANK

SCALE: 1/4"=1'-0"
DATE: 3/17/00
POLYPROCESSING COMPANY
Western Region
DR: MB WILKERSON
CK: D. RECTOR
SHEET: 1 OF 1
COMPUTER FILE: 11206
REV: E

REV "E" REVISED FOR MOLD MODIFICATIONS BY:JB 6/16/053 CK:VM
REV "D" REVISED IMFO STYLE BY:JB 4/30/03 CK:VM
REV "C" ADDED FITTING NOTE BY:JB 3/3/02 CK:MBW
REV "B" REVISED STOCK NUMBER BY:JB 3/3/02 CK:MBW
REV "A" ADDED LIFTING LUGS & DETAIL BY:JB 10/31/02

Table I

The following chemicals do not attach or permeate high density crosslinkable polyethylene resins up to 100° F. Each application should be considered individually. All concentrations apply except where noted.

Acetic Acid <1%
Aluminum Salts
Alum
Ammonium Hydroxide
Ammonium Salts
Amyl Alcohol
Antimony Salts
Arsenic Acid
Barium Hydroxide
Benzene Sulfonic Acid <1%
Bismuth Salts
Boric Acid <10%
Bromic Acid <10%
Butanediol
Butyl Alcohol
Calcium Hydroxide
Calcium Salts
Chromic Acid<50%
Citric Acid <1%
Copper Salts
Detergents
Diazo Salts
Diethyl Carbonate
Diethanol Amine
Diethylene Glycol
Diglycolic Acid
Dimethylamine
Dimethyl Formamide

Ethyl Alcohol
Ethylene Glycol
Ferric Salts
Ferrous Salts
Fluoboric Acid <5%
Fluosilicic Acid
Formic Acid <1%
Gallic Acid
Gluconic Acid
Hexanol
Hydrazone<35%
Hydrozine Hydrochloride
Hydriodic Acid
Hydrobromic Acid
Hydrochloric Acid
Hydrofluoric Acid <5%
Hydrofluorosilicic Acid <5%
Hydrogen Peroxide<52%
Hydrogen Phosphide
Hydroquinone
Hypochorous Acid
Iodine Solutions
Lactic Acid
Latex
Lead Acetate
Magnesium Salts
Mercuric Salts
Mercurous Salts

Mercury
Methyl Alcohol
Methylsulfuric Acid
Michel Salts
Nicotinic Acid
Nitric Acid<50%
Oxalic Acid <1%
Perchloric Acid <1%
Phenol<10%
Potassium Hydroxide
Potassium Salts
Phosphoric Acid
Photographic Solutions
Propyl Alcohol
Propylene Glycol
Sea Water
Selenic Acid <1%
Sewage
Silicic Acid
Silver Salts
Soap Solutions
Sodium Ferricyanide
Sodium Ferrocyanide
Sodium Hydroxide
[1]Sodium Hypochlorite<9%
Sodium Salts
Sodium Sulfonates
Stanic Salts

Stannous Salts
Starch Solutions
Stearic Acid
Sulfuric Acid <80%
Sulfurous Acid
Sugar Solution
Glucose
Lactose
Sucrose, etc.
Tannic Acid
Tanning Extracts
Tartaric Acid
Titinium Acid
Toluene Sulfonic Acid
Triethanolamine
Urea
Vinegar
Wetting Agents
Zinc Salts

[1]Concentrations above stated percentage require special considerations, contact factory for guidelines concerning these applications.

Table II

The following oils and organic chemicals do not attack HDXLPE resins. They will be absorbed into the wall of the tank; however, there should be no loss of chemical. Because of this absorption, no chemical other than the original should be stored in the tank as long as contamination may result as the absorbed oil is leached out. Storage at temperatures up to 100° F are possible provided the effects of the absorption on the properties of the tank are not prohibitive.

Fatty Acids	Mineral Oils	Animal Fats	Vegetable Oil
Butyric	Lube	Lard	Corn
Lauric	Transformer	Fish Oil	Coconut
Linoleic	Hydraulic	Musk Oil	Cottonseed
Oleic		Whale Oil	Olive
Palmitic			Peanut
Stearic			

Table III

The following organic chemicals do not attack high density crosslinkable polyethylene resins. They will be absorbed into the wall of tank and a permeation loss will occur. Because of this permeation and the effect it has on the physical properties of the tank, it is generally not recommended that these chemicals be storage at room temperatures above 100° F. However, their use largely depends on such factors as size of tank, its location, toxicity of the chemical, and applicable codes such as NFPA, OSHA, etc.

Aniline
Benzene
Carbon Tetrachloride
Chlorabenzene
Cychohexanol
Cycolchexnone
Dibutyliphthalate
Diesel Fuel
Dimethylamine
Ethyl Butyrate
Ethylene Chlorohydin
Fuel Oil
Furural
Aliphatic Hydrocarbons (hexane, octane, hexene, octene, etc.)
Jet Fuel
Gasoline
Nitrobenzene
Octyl Cresol
Propylene Dichloride
Toluene
Xylene

This document reports accurate and reliable information to the best of our knowledge, but our suggestions and recommendations cannot be guaranteed because the conditions of use are beyond our control. Information presented herein is given without reference to any patent questions which may be encountered in use thereof. Such questions should be investigated by those using this information. Poly Processing Company assumes no responsibility for the use of information presented herein and hereby disclaims all liability in regard to such use.

POLYPROCESSING COMPANY
Providing Solutions Through Innovation

Chemical Resistance

Chemical Resistance

Chemical "resistance" and "compatibility" are synonymous terms used in relation to the ability of a plastic to function in different environments. In regards to polyethylene chemical storage tanks, chemical resistance encompasses the total effect a product would have on a tank. The factors that make up the overall compatibility of a chemical to a rotomolded tank are (1) chemical attack, (2) absorption or permeation, and (3) solubility and stress crack resistance.

Chemical Attack

By definition, chemical attack involves an actual chemical reaction with the plastic. This can be a breaking of molecular chains and/or an addition of chemical groups to the molecule. For example, in the case of an oxidation reaction with polyethylene, both occur with the addition of carbonyl groups. This causes and eventual loss of properties to the point that a tank would not be serviceable.

Polyethylene in general is one of the most inert plastics available. Very few chemicals react with polyethylene and with those that do, the rate is relatively slow. The ultra high molecular weight characteristics of high density crosslinked polyethylene resins after crosslinking makes these particular polyethylenes even more resistant than other grades.

Permeation

This involves the physical absorption of the chemical into the polyethylene. If this is a volatile chemical, then an actual loss of the product can occur as the chemical vaporizes from the outer wall of the tank. The amount of absorption is generally limited to 3 to 7 percent by weight of the polyethylene. Also, the loss of volatile products is relatively small. For example, a 25-gallon tank with a 50-mil wall will only lose between 5 and 6 grams of gasoline per day due to permeation. The thicker the wall, the lower the rate of loss.

The absorption of a product into the wall of a tank will cause more property changes. The tensile strength is reduced approximately 15 to 20 percent and stiffness approximately 20 percent. Normally, this does not affect the utility of a tank or prohibit the application. The property losses due to permeation are offset by increasing the design wall thickness of the tank.

Elevated Temperature

The effects of elevated temperature (100° F or greater) on polyethylene tank are predictable and expected. Polyethylene, which is a flexible material, becomes even more flexible when heated. It will, therefore, bulge more at an elevated temperature than at room temperature.

By looking at the design hoop stress values for various temperatures, one can see the effects of increased temperature services. The values remain relatively constant up to 100° F, after which they begin to decrease.

100° F	600 psi	130° F	450 psi
110° F	550 psi	140° F	400 psi
120° F	500 psi	150° F	300 psi

A rise in temperature of 50° F (100° F to 150° F) reduces the design hoop stress value from 600 psi to 300 psi and doubles the required wall thickness. It follows that simply increasing the service rating of a tank from 1.35 S.G. to 1.65 S.G., or even to 1.90 S.G. is not necessarily sufficient. The proper wall thickness must be calculated for the temperature of service.

The maximum temperature rating for crosslinked polyethylene material is 150° F. Above that temperature the thermal stabilizers in the plastic are more rapidly consumed. Continued use will cause embrittlement and a reduction in the useful life of the part. Temperature services from 100° F to 150° F are acceptable applications, however, thicker tank walls are required to maintain a safe design. Consult the factory when application such as these arise.

Authorized Distributor:

Toll-Free 1-866-590-6845
www.polyprocessing.com

Table I

The following chemicals do not attach or permeate high density crosslinkable polyethylene resins up to 100° F. Each application should be considered individually. All concentrations apply except where noted.

Acetic Acid
Aluminum Salts
Alum
Ammonium Hydroxide
Ammonium Salts
Amyl Alcohol
Antimony Salts
Arsenic Acid
Barium Hydroxide
Benzene Sulfonic Acid
Bismuth Salts
Boric Acid
Bromic Acid
Butanediol
Butyl Alcohol
Calcium Hydroxide
Calcium Salts
Chromic Acid<50%
Citric Acid
Copper Salts
Detergents
Diazo Salts
Diethyl Carbonate
Diethanol Amine
Diethylene Glycol
Diglycolic Acid
Dimethylamine
Dimethyl Formamide
Ethyl Alcohol
Ethylene Glycol
Ferric Salts
Ferrous Salts
Fluoboric Acid
Fluosilicic Acid
Formic Acid
Gallic Acid
Gluconic Acid
Hexanol
Hydrazone<35%
Hydrozine Hydrochloride
Hydriodic Acid
Hydrobromic Acid
Hydrochloric Acid
Hydrofluoric Acid
Hydrofluorosilicic Acid
Hydrogen Peroxide<52%
Hydrogen Phosphide
Hydroquinone
Hypochorous Acid
Iodine Solutions
Lactic Acid
Latex
Lead Acetate
Magnesium Salts
Mercuric Salts
Mercurous Salts
Mercury
Methyl Alcohol
Methylsulfuric Acid
Michel Salts
Nicotinic Acid
Nitric Acid<50%
Oxalic Acid
Perchloric Acid
Phenol<10%
Potassium Hydroxide
Potassium Salts
Phosphoric Acid
Photographic Solutions
Propyl Alcohol
Propylene Glycol
Sea Water
Selenic Acid
Sewage
Silicic Acid
Silver Salts
Soap Solutions
Sodium Ferricyanide
Sodium Ferrocyanide
Sodium Hydroxide
[1]Sodium Hypochlorite<9%
Sodium Salts
Sodium Sulfonates
Stanic Salts
Stannous Salts
Starch Solutions
Stearic Acid
[1]Sulfuric Acid <80%
Sulfurous Acid
Sugar Solution
Glucose
Lactose
Sucrose, etc.
Tannic Acid
Tanning Extracts
Tartaric Acid
Titinium Acid
Toluene Sulfonic Acid
Triethanolamine
Urea
Vinegar
Wetting Agents
Zinc Salts

[1]Concentrations above stated percentage require special considerations, contact factory for guidelines concerning these applications.

Table II

The following oils and organic chemicals do not attack HDXLPE resins. They will be absorbed into the wall of the tank; however, there should be no loss of chemical. Because of this absorption, no chemical other than the original should be stored in the tank as long as contamination may result as the absorbed oil is leached out. Storage at temperatures up to 100° F are possible provided the effects of the absorption on the properties of the tank are not prohibitive.

Fatty Acids	**Mineral Oils**	**Animal Fats**	**Vegetable Oil**
Butyric	Lube	Lard	Corn
Lauric	Transformer	Fish Oil	Coconut
Linoleic	Hydraulic	Musk Oil	Cottonseed
Oleic		Whale Oil	Olive
Palmitic			Peanut
Stearic			

Table III

The following organic chemicals do not attack high density crosslinkable polyethylene resins. They will be absorbed into the wall of tank and a permeation loss will occur. Because of this permeation and the effect it has on the physical properties of the tank, it is generally not recommended that these chemicals be storage at room temperatures above 100° F. However, their use largely depends on such factors as size of tank, its location, toxicity of the chemical, and applicable codes such as NFPA, OSHA, etc.

Anitine
Benzene
Carbon Tetrachloride
Chlorabenzene
Cychohexanol
Cycolohexnone
Dibutylphthalate
Diesel Fuel
Dimethylamine
Ethyl Butyrate
Ethylene Chlorohydin
Fuel Oil
Fufural
Aliphatic Hydrocarbons (hexane, octane, hexene, octene, etc.)
Jet Fuel
Gasoline
Nitrobenzene
Octyl Cresol
Propylene Dichloride
Toluene
Xylene

This document reports accurate and reliable information to the best of our knowledge, but our suggestions and recommendations cannot be guaranteed because the conditions of use are beyond our control. Information presented herein is given without reference to any patent questions which may be encountered in use thereof. Such questions should be investigated by those using this information. Poly Processing Company assumes no responsibility for the use of information presented herein and hereby disclaims all liability in regard to such use.

OR-1000™ Tank Systems!

Specify Peace of Mind!

NSF/ANSI 61

- **OR-1000™ Engineered System**
- **4 Times Antioxidants**
- **Certified for 31+ Hazardous and Corrosive Chemical Applications**
- **Design Temperatures to 140°F**
- **Complies with State Regulations**

Provide Longer Tank Life with an IMFO®/OR-1000™ System!

Increase Tank Longevity!

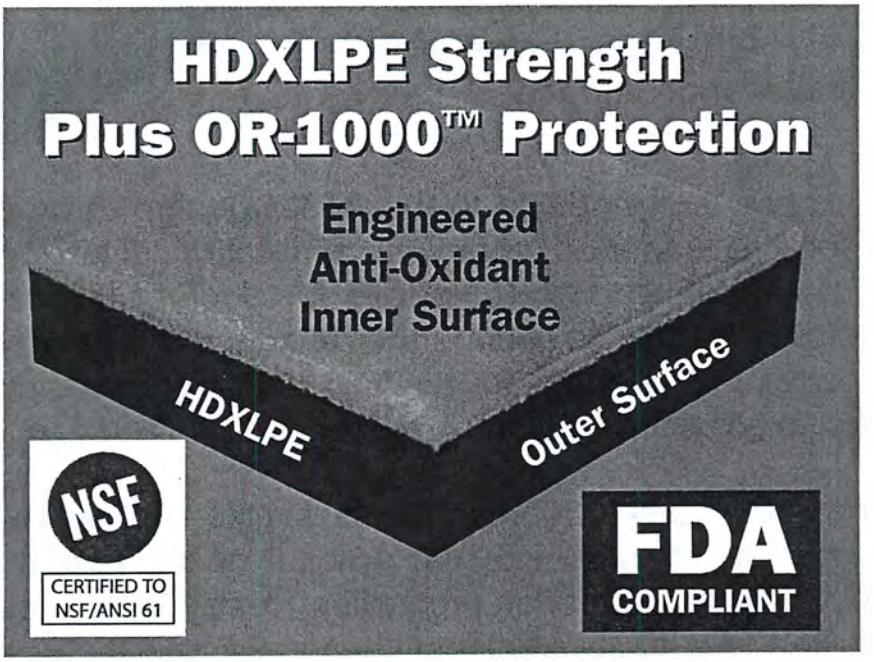

- Proven System since 1995
- Increased Chemical Resistance
- Complete Drain
- Maintenance Free
- Avoids Confined-Space Entry
- 4x Anti-Oxidant Package
- Sodium Hypochlorite/Sulfuric Acid/ Hydrochloric Acid applications*

*See warranty information on page 26

POLY PROCESSING COMPANY
Providing Solutions Through Innovation

Storage Solution: OR-1000 Liner

Poly Processing Company is the only rotational molding company with the ability to provide the strength, durability and safety of HDXLPE with the added value of an oxidation resistant liner, OR-1000, integrally molded as the interior surface of the part.

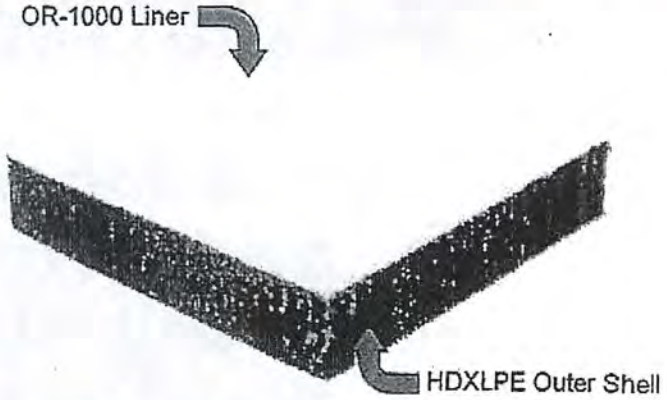

The liner thickness is in addition to the ASTM design thickness of the HDXLPE outer shell for the intended chemical application. This crosslink / OR-1000 combination has been successfully used for Sodium Hypochlorite and Sulfuric Acid services since 1995. To even further enhance the value of this combination, we are now adding this lining to the new high performance Metallocene High Density Crosslinked resin.

The reason for the OR-1000 material is simple. To develop the outstandi... long-term properties of HDXLPE, the amount of anti-oxidants must be limited. Although HDXLPE has superior properties to any other rotational mold grade polyethylene, in a few highly oxidizing chemical applications, its optimum service life has not been obtained. To capitalize on the superior properties and performance characteristics of HDXLPE, the OR-1000 liner was developed to serve as an oxidation barrier to improve service life in oxidizing chemical applications. This combination provides unmatched performance and value to our customers.

Sodium Hypochlorite and Sulfuric Acid remain very difficult storage and handling applications. However, we continue to bring you the very best in value, service and high performance products -- Poly Processing Company, *providing solutions through innovation.*

CERTIFIED ISO 9001

member

THE CHLORINE INSTITUTE, INC.
member

Authorized Distributor:

1-866-590-6845
www.polyprocessing.com

POLYPROCESSING COMPANY

Providing Solutions Through Innovation

Polyethylene Tank Life Expectancy

For 35 years, Poly Processing Company has been **Helping Our Customers . . . Solve Problems** associated with storing hazardous chemicals, **Managing Risk** with the Environment and Employee Safety and **Growing Their Profits** with Increased Tank Longevity and Operating Efficiencies. We have specialized in providing hazardous chemical storage solutions to the industrial, water and waste water markets. While we manufacture both linear and crosslink polyethylene storage tanks; in **hazardous chemical environments, crosslink polyethylene** is the material of choice. Our customers report crosslink polyethylene tanks providing service for 10+ years with 15 to 20 years of tank service being common. However; there are many factors and variables that have an effect on the useful life of any tank including polyethylene.

Chemical, Concentration and Temperature: The chemical, concentration and operating temperature are all factors influencing the life expectancy of a polyethylene tank. For example, high concentrations of Sulfuric Acid are stress cracking agents and are more aggressive oxidizers than less concentrated chemicals such as 25% Caustic Soda. For this reason, Poly Processing offers our customers the OR-1000™ Anti-Oxidant Systems. Another example: 12% Sodium Hypochlorite will degrade from UV exposure and elevated temperatures. As it degrades, sediment builds in the bottom of the tank leading to a shorter tank life. To eliminate this sludge buildup, Poly Processing Company offers our customers the IMFO® (Integrally Molded Flanged Outlet). The IMFO® design promotes continuous "system" flushing increasing tank life and operating efficiencies. Poly Processing Company chemical storage tanks are constructed from premium materials and designed specifically for the chemical, concentration and temperature requirements.

Installation and Piping: The single biggest reason for tank life reduction is improper tank installation and **"hard"** piping. Polyethylene's broad spectrum of chemical resistance vs. other materials of construction is based on its ability to expand and contract. Flexible connections compensate for tank expansion and contraction promoting a longer useful life. It is important to follow Poly Processing Company's Installation Manual Instructions during the installation process.

Venting: Often overlooked, venting is a very important step that promotes tank longevity. Polyethylene tanks are rated at atmospheric pressure/vacuum. Adequate vent size is always based on flow and delivery rates so it is important to gather the following information to adequately determine the proper venting requirements:

1) Is the tank to be filled pneumatically?
2) Is the tank to be vented to atmosphere?
3) Does the length of the vent exceed 3 feet (piped to a central vent system)
4) Is a fume scrubbing system to be used?
5) Are vent screens to be used (restricts flow)?
6) Does the tank manufacturer offer a method of "emergency venting" to prevent over-pressurization?

Other Items Effecting Tank Longevity:

1) Continuous cycling (fill / discharge)
2) Excessive agitation
3) Mobile applications

For further information about your specific needs or applications, please contact Poly Processing Company at 1-866-590-6845 or visit our website at www.polyprocessing.com.

POLYPROCESSING

Providing Solutions Through Innovation

Chemical Resistance

Chemical Resistance

Chemical "resistance" and "compatibility" are synonymous terms used in relation to the ability of a plastic to function in different environments. In regards to polyethylene chemical storage tanks, chemical resistance encompasses the total effect a product would have on a tank. The factors that make up the overall compatibility of a chemical to a rotomolded tank are (1) chemical attack, (2) absorption or permeation, and (3) solubility and stress crack resistance.

Chemical Attack

By definition, chemical attack involves an actual chemical reaction with the plastic. This can be a breaking of molecular chains and/or an addition of chemical groups to the molecule. For example, in the case of an oxidation reaction with polyethylene, both occur with the addition of carbonyl groups. This causes and eventual loss of properties to the point that a tank would not be serviceable.

Polyethylene in general is one of the most inert plastics available. Very few chemicals react with polyethylene and with those that do, the rate is relatively slow. The ultra high molecular weight characteristics of high density crosslinked polyethylene resins after crosslinking makes these particular polyethylenes even more resistant than other grades.

Permeation

This involves the physical absorption of the chemical into the polyethylene. If this is a volatile chemical, then an actual loss of the product can occur as the chemical vaporizes from the outer wall of the tank. The amount of absorption is generally limited to 3 to 7 percent by weight of the polyethylene. Also, the loss of volatile products is relatively small. For example, a 25-gallon tank with a 50-mil wall will only lose between 5 and 6 grams of gasoline per day due to permeation. The thicker the wall, the lower the rate of loss.

The absorption of a product into the wall of a tank will cause more property changes. The tensile strength is reduced approximately 15 to 20 percent and stiffness approximately 20 percent. Normally, this does not affect the utility of a tank or prohibit the application. The property losses due to permeation are offset by increasing the design wall thickness of the tank.

Elevated Temperature

The effects of elevated temperature (100° F or greater) on polyethylene tank are predictable and expected. Polyethylene, which is a flexible material, becomes even more flexible when heated. It will, therefore, bulge more at an elevated temperature than at room temperature.

By looking at the design hoop stress values for various temperatures, one can see the effects of increased temperature services. The values remain relatively constant up to 100° F, after which they begin to decrease.

100° F	600 psi	130° F	450 psi
110° F	550 psi	140° F	400 psi
120° F	500 psi	150° F	300 psi

A rise in temperature of 50° F (100° F to 150° F) reduces the design hoop stress value from 600 psi to 300 psi and doubles the required wall thickness. It follows that simply increasing the service rating of a tank from 1.35 S.G. to 1.65 S.G., or even to 1.90 S.G. is not necessarily sufficient. The proper wall thickness must be calculated for the temperature of service.

The maximum temperature rating for crosslinked polyethylene material is 150° F. Above that temperature the thermal stabilizers in the plastic are more rapidly consumed. Continued use will cause embrittlement and a reduction in the useful life of the part. Temperature services from 100° F to 150° F are acceptable applications, however, thicker tank walls are required to maintain a safe design. Consult the factory when application such as these arise.

Crosslinked Polyethylene with OR-1000™ System
The #1 System for Oxidizing Chemical Environments

Poly Processing Company and other polyethylene tank manufacturers, as well as major polyethylene resin manufacturers have published many documents over the past several years discussing the benefits of certain rotational molding resins in acidic and alkaline chemical environments. The majority of these documents support the use of crosslinked polyethylene over linear polyethylene in acidic and basic chemical environments. These articles speak to the longevity of crosslinked polyethylene rotationally molded tanks, the safety of having polymer chains that are chemically bonded, and the leveraged investment of knowing that crosslinked polyethylene chemical storage tanks have been utilized for the last 35 years.

In 2001, one of the largest resin manufacturers in North America published a fairly extensive study which showed that their linear polyethylene in a lab environment performed as well as, if not better than crosslinked polyethylene, in acidic and alkaline chemical applications. This study, coupled with marketing efforts by linear polyethylene tank manufacturers who do not rotationally mold crosslinked polyethylene tanks in the course of their normal business, has given rise to some industry confusion and misunderstanding about what is the best resin system for storing oxidizing chemicals. We will summarize the facts about rotationally molded polyethylene storage tanks and the value of an engineered antioxidant resin system coupled with the long-term performance of crosslinked polyethylene.

We would first like to discuss the lab study performed by the linear resin manufacturer. The study compared crosslinked polyethylene with linear polyethylene in sulphuric acid and sodium hypochlorite environments. The sulphuric acid was concentrated approximately 93%-97%, and the Sodium Hypochlorite was around 14% concentration. The lab study describes how the crosslinked polyethylene and linear polyethylene were submersed in the chemicals and then tested using ARM Impact testing as well as Environmental Stress Crack Resistivity (ESCR) testing. The study concluded that the linear materials in a chemical resistivity mode held up as well as crosslinked materials in a lab environment. In addition, Higher ESCR properties are found in lower density materials like LLDPE or LDPE as compared to HDPE resins. It doesn't mean you want to use a tank made only from the lower density resins. ESCR shows how well the material performs in a pre-notched condition in the presence of certain chemicals.

The lab study performed by the resin manufacturer did not cover or discuss the long-term properties of these materials in harsh, environmental conditions. Over time, sodium hypochlorite and sulphuric acid create an oxidative environment, which remove hydrogen molecules from the polymer chains creating embrittlement. This phenomenon is inherent to all types of polyethylene, since they are hydrocarbon based molecules. Storing acids and bases in actual everyday environments presents a completely different set of parameters and stresses that have little to do with the lab environment.

Poly Processing Company has been aware of this relationship between ESCR and Chemical resistance for many years and has been an industry leader in creating engineered resin systems which give the end user the ability to have excellent oxidation and chemical resistivity without sacrificing long term performance and toughness. These engineered resin systems deliver peace of mind, a margin of safety, and leveraged investment to the end user.

Another critical factor to consider when storing acids and bases in actual everyday environments is the Long Term Hydrostatic Strength (LTHS) of the polyethylene. LTHS properties are one of the keys to providing the continued strength necessary for tanks during its service life. This property is especially important in field applications where tanks can see elevated temperatures approaching

140°F. LTHS tests are conducted at both ambient temperature (73°F) and at elevated temperature (140°F) since actual field conditions are typically in this range.
Figure 1.

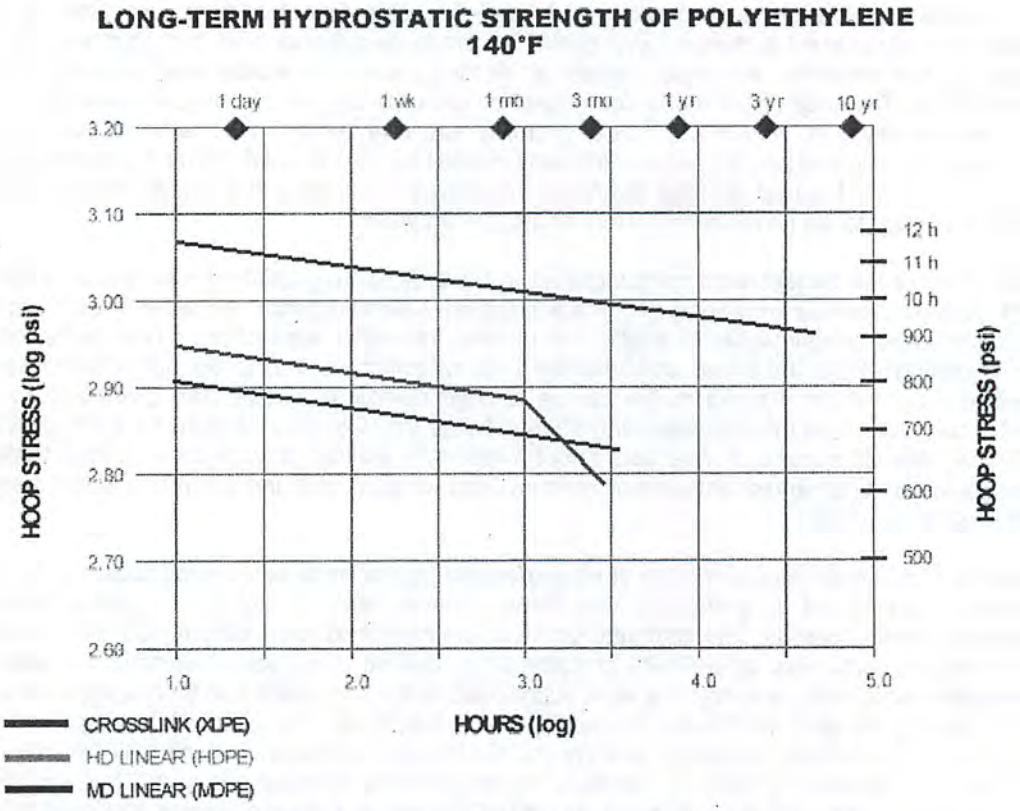

Source: Chevron Phillips Company, Plastics Technical Center

The rapid deterioration in properties is indicated by a "knee" in the curve of hoop strength versus time as illustrated in Figure 1 above. Even high performance HDPE will develop a LTHS knee at around 1000 hours (log 3), and some MDPE products will have a knee in less than 10,000 hours (log 5). This type of performance substantially reduces the expected long-term performance at elevated temperatures. Crosslinked polyethylene has been tested to 50,000 hours at 140°F and shows no signs of a knee.

There is still the need to surround the oxidation resistant material with a robust resin system that will give you longer useful tank life, superior impact resistance, and greater tensile strength for a safer product. That is why crosslinked polyethylene is still the material of choice for industrial and municipal chemical applications.

Poly Processing Company has been the leader in rotationally molded crosslinked polyethylene storage tanks for 35 years. We work with the leading universities in the country to develop engineered resin systems that will perform above and beyond any standard "off the shelf" polyethylene in harsh, oxidizing environments. One of the systems we developed is the OR-1000™ system. This system uses the best linear resin for chemical resistivity combined with four (4) times the antioxidant power and a crosslink outer wall for maximum long-term performance and durability.

Poly Processing Company developed the OR-1000™ oxidation resistance system in 1995. This lower density linear material serves to increase the service life of crosslinked polyethylene tanks in oxidizing chemical service (Sodium Hypochlorite, Sulphuric Acid, Hydrochloric Acid, and Nitric Acid). To develop the outstanding long-term physical properties of crosslinked polyethylene, the amount of antioxidant compounded into the material has to be limited. Although crosslinked polyethylene has superior properties to any other rotational molding grade polyethylene, the tank's useful service life will be reduced without the OR-1000™ system. In order to utilize the superior properties of crosslinked polyethylene, the OR-1000™ system was developed to greatly improve the service life in harsh oxidizing chemical environments. This material is a medium density linear based resin with a large amount of antioxidant added to it for the best oxidizing resistance system in the industry. The OR-1000™ system has been engineered to prevent de-lamination during the useful life of the tank.

To compare the effect of oxidizing chemicals on the OR-1000™ system and crosslinked polyethylene, 1/8" thick tensile bars of both OR-1000™ and crosslinked polyethylene were submerged in a manufacturer's storage tank. This tank handled a highly oxidizing chemical, 17% Sodium Hypochlorite, and was emptied and filled at least once a day. Every 30 days, samples were pulled and tensile and percent elongation was determined as well as ESCR tests. Oxidization or reduction in physical properties is indicated by reduced in elongation. After six months of testing, the elongation of the crosslinked polyethylene tensile bars had decreased 26% while OR-1000™ elongation had no change. This is due to the added antioxidant in the OR-1000™ system as well as the fact that the linear material used in the testing was a lower density material than the crosslinked material.

Crosslinked polyethylene provides superior environmental stress cracking resistance (ESCR) or sometimes generally referred to as resistance to slow crack growth (SCG) in almost all chemical applications. Two tests which clearly show this difference are the bent strip ESCR (ASTM D1693) with 10% Igepal where crosslink polyethylene does not fail in over 1000 hours compared to typical values for LMDPE of <400 hours. Another test which shows the slow crack growth difference with no surfactant (in air) is the polyethylene notch test (PENT) described in ASTM F 1473 and crosslink polyethylene again does not fail in over 1000 hours and LMDPE grades fail in <100 hours. Even though linear polyethylene grades with improved ESCR have become available over the past 10 to 15 years, they still do not match crosslinked polyethylene in SCG performance. Slow crack growth resistance as was shown earlier in this paper is an important property that can affect the long-term performance of tanks.

The best of both worlds is having the OR-1000™ system for the long-term oxidative resistivity characteristics (as discussed in the resin manufacturer's lab study), with the robustness of crosslinked polyethylene for the long-term durability and long useful life that is expected of industrial grade chemical storage tanks. This is why so many chemical manufacturers and distributors choose Poly Processing Company for engineered chemical storage solutions.

Crosslinked polyethylene tanks with the OR-1000™ system varying in sizes from 500 gallons to 14,950 gallons have been in true industrial and municipal use for over 10 years with excellent results. Poly Processing Company backs every crosslinked polyethylene tank with the OR-1000™ system with a 5 year full warranty on all suitable applications including sodium hypochlorite and hydrochloric acid, sulfuric acid 80%-98% carries a full 3 year warranty

Store your harsh oxidizing chemicals with the confidence and peace of mind that you deserve. Specify Poly Processing Company's crosslinked polyethylene tanks with the OR-1000™ system for longevity, safety, and leveraged investment. Please consult your distributor or Poly Processing Company at 1-866-590-6845 for your specific requirements.

tobeywade
STRUCTURAL ENGINEERS

May 6, 2010
Project No. R115-07-08

Mr. Aubry Burgess, Maintenance Supervisor
PHILIP SERVICES CORPORATION
ENVIRONMENTAL SERVICES DIVISION
2095 Newlands Drive East
Fernley, NV 89408

RE: TANK 202 CERTIFICATION REPORT

Dear Mr. Burgess:

In accordance with the Fernley Facility Amended Tank Replacement plan as prepared by Philip Services Corporation (PSC) and dated March 25, 2008, each tank is required to be certified by Independent Registered Professional Engineers (IRPE's) prior to being placed into service. This report has been prepared to document the evaluations as performed by Tobey-Wade Consulting.

Background

Tank 202 is a Crosslinked Polyethethylene Tank with a 6,250 gallon capacity as manufactured by Poly Processing Company. Poly Processing has provided data relative to the tank's strength and its chemical resistance capabilities. Poly Processing has also provided an opinion as to any offsets observed in the tank shell.

Schiff Associates has evaluated the tank's suitability and compatibility for its proposed use in PSC's facility. Their conclusions have been provided under separate cover to PSC.

Findings

Based on our research, analysis and structural observations, the following systems are in compliance with the Amended Tank Replacement plan:

- Tank 202 is situated on a reinforced concrete foundation system which is capable of adequately supporting the tank and its contents under static and dynamic conditions.
- Tank 202 is located in an area with sufficient secondary containment as required by 40 CFR Ch. I, 264.193.
- Tank 202 is stabile against overturning when subjected to loads based on 2006 International Building Code level seismic events.

- Tank 202 is anchored to prevent sliding when subjected to loads based on 2006 International Building Code (IBC) level seismic events. Structural Observation and Special Inspection of the anchorage system has been performed as required by the IBC. The Structural Observation and Special Inspection reports are attached.

- Tank 202 has been tested for leakage and found to be watertight. The Tank Leakage Test report is attached.

- The exterior of Tank 202's shell wall has been inspected and found to be generally undamaged. The Tank Shell Inspection report is attached.

Structural Observation, tank leakage inspections and tank shell inspections were performed by Tobey-Wade Consulting under my direct supervision. Special Inspections were performed by ICC-certified inspectors from Black Eagle Consulting based on anchorage requirements provided by Tobey-Wade Consulting.

Certification Statement

I certify under penalty of law that this report and all attachments were prepared under my direction and supervision in accordance with a system developed to assure that qualified personnel properly gather and evaluate the information submitted. Based on my inquiry of the person or persons who manage the system or those persons directly responsible for gathering the information, the information, submitted is, to the best of my knowledge and belief, true, accurate, and complete. I am aware that there are significant penalties for submitting false information, including the possibility of fines and imprisonment for knowing violations.

This report has been prepared in accordance with acceptable engineering practices and is subject to the assumptions and limitations stated in the report. Also note that this certification covers the aforementioned aspects of Tank 202 only.

Please feel free to contact me at your convenience should you have any questions relating to our findings.

Sincerely,
TOBEY-WADE CONSULTING

Terrence R. Tobey

Terrence R. Tobey, S.E.
Principal Structural Engineer

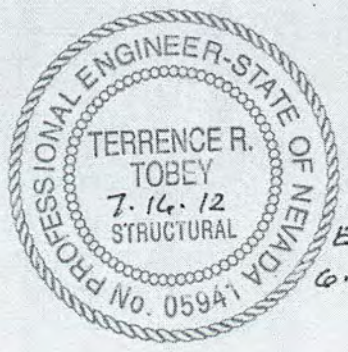

NON-CONTROLLED COPY
INFORMATION SUBJECT TO CHANGE WITHOUT NOTICE
VERIFY REV LEVEL OF PAPER COPY WITH REV LEVEL ON PPC WEB SITE

Proposed Storage Tank

(A) MOLDED-IN LIFTING LUG PAIRS (4) PLACES
USE MINIMUM OF (1) LUG AT EACH LOCATION FOR LIFTING (SEE DETAIL)

MOLDED-IN LADDER ATTACHMENT LUG TYP (2) PLACES

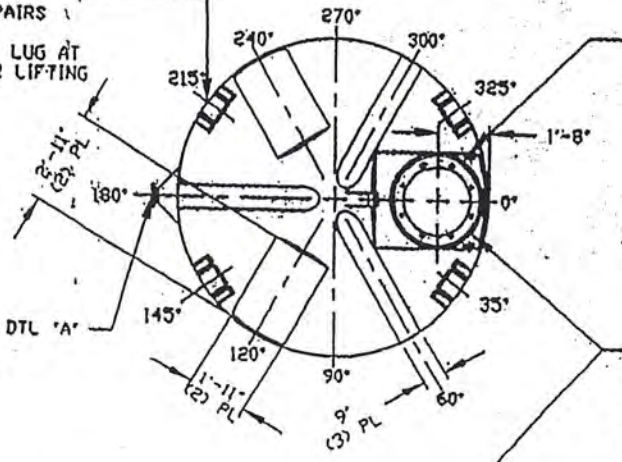

STANDARD COVER:
24"/(8) BOLT MANWAY COVER/PE (SHOWN)
PPC STOCK NO. 3218 OR
24"/STRAPPED MANWAY COVER/PE (B)
PPC STOCK NO. 3217
(OPTIONAL 24" COVERS AVAILABLE)

NOZZLE SCHEDULE & ACCESSORIES

SERVICE	MK	STOCK NO.	SIZE	FITTING	DEG	ELEV

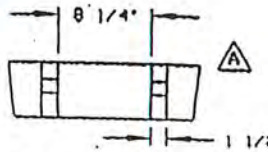

LIFTING LUG DETAIL
(4) PLACES
SCALE: 1"=1'-0"

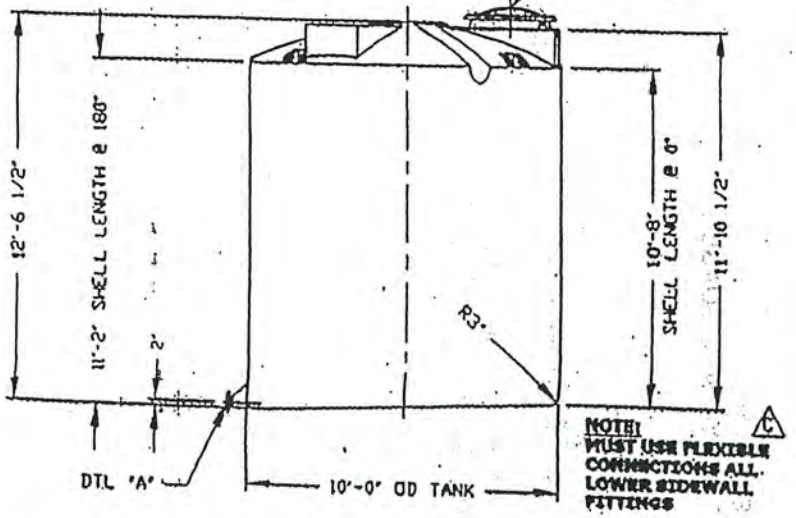

NOTE: MUST USE FLEXIBLE CONNECTIONS ALL LOWER SIDEWALL FITTINGS (C)

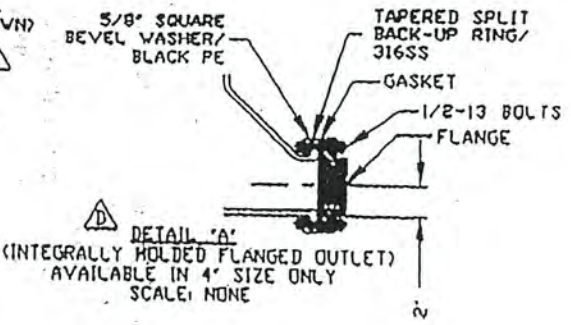

(D) DETAIL "A"
(INTEGRALLY MOLDED FLANGED OUTLET)
AVAILABLE IN 4" SIZE ONLY
SCALE: NONE

NOTES
1. THIS IS A COMPUTER GENERATED .DWG. DO NOT REVISE BY HAND.
2. DIMENSIONS WILL VARY ±3% DUE TO VARIATIONS IN MULTIPLE MOLDS & CONDITIONS PREVALENT DURING MANUFACTURE & USAGE.
3. NO MOLDED IN GALLONAGE MARKERS THIS TANK.

CALCULATED CAPACITIES/ VOLUME IN U.S. GALLONS		
DESIGN CAP	DUMP VOL	TOTAL VOL
6283	470	6753

CONFIDENTIAL PROPERTY OF POLY PROCESSING COMPANY NOT FOR REPRINT OR USE WITHOUT PERMISSION

DWG TITLE: 6250 GALLON SLOPE BOTTOM IMFO TANK

SCALE: 1/4"=1'-0"
DATE: 3/17/00
POLYPROCESSING COMPANY
DR: HB WILKERSON
CK: D. OR
SHEET: 1 OF 1
COMPUTER #: 11206250
REV: E

REV "E" REVISED FOR MOLD MODIFICATIONS BY:JB 6/16/033 CK:VH
REV "D" REVISED INFO STYLE BY:JB 4/30/03 CK:VH
REV "C" ADDED FITTING NOTE BY:JB 3/3/02 CK:HBV
REV "B" REVISED STOCK NUMBER BY:JB 3/3/02 CK:HBV
REV "A" ADDED LIFTING LUGS & DETAIL BY:JB 10/31/02 CK:VH

ADDITION DATE 10/09/09
REVISION NUMBER 1

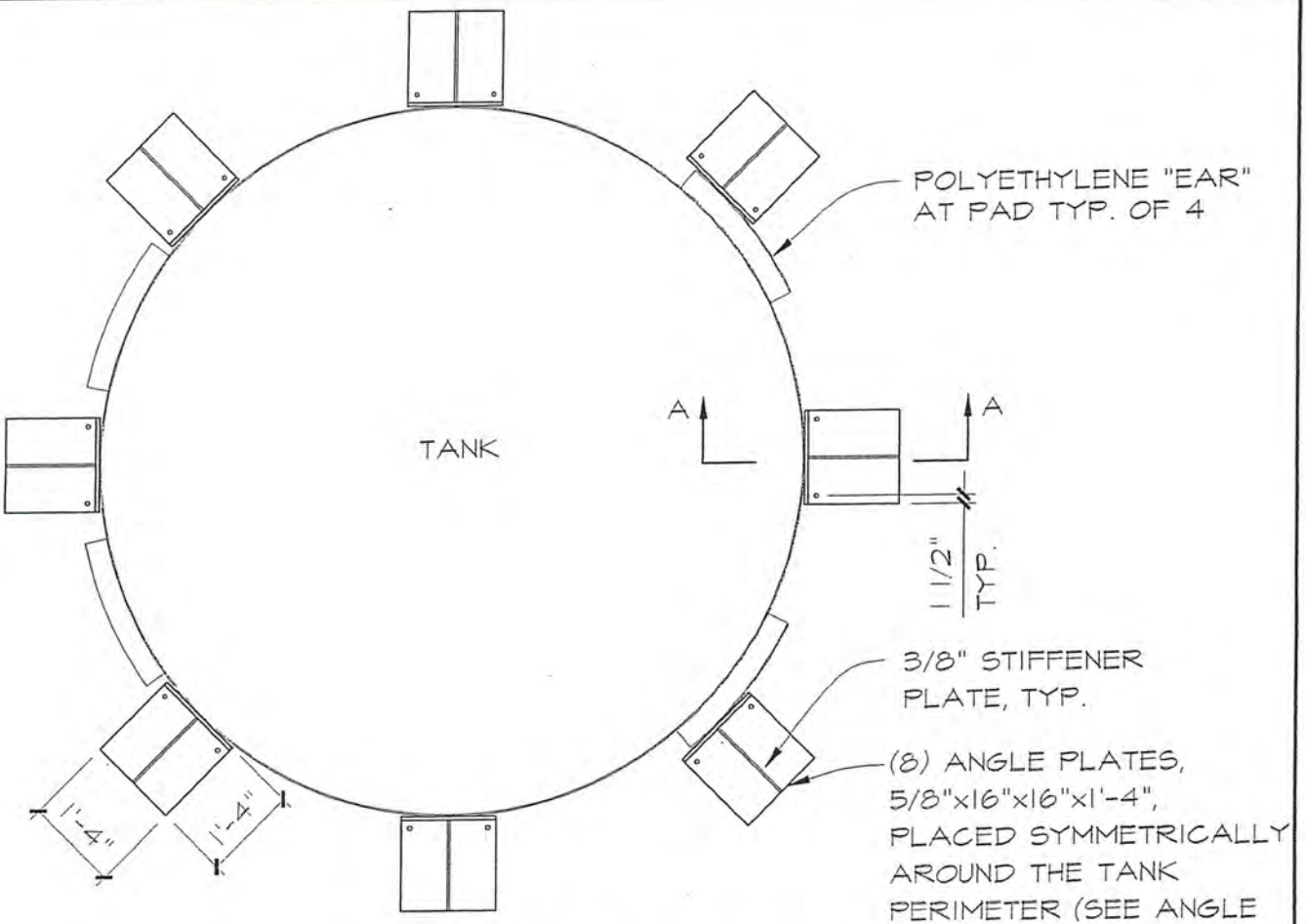

TANK NO's 201 - 208
CYLINDRICAL FLAT BOTTOM TANK

SCALE: 3/8"=1'-0"

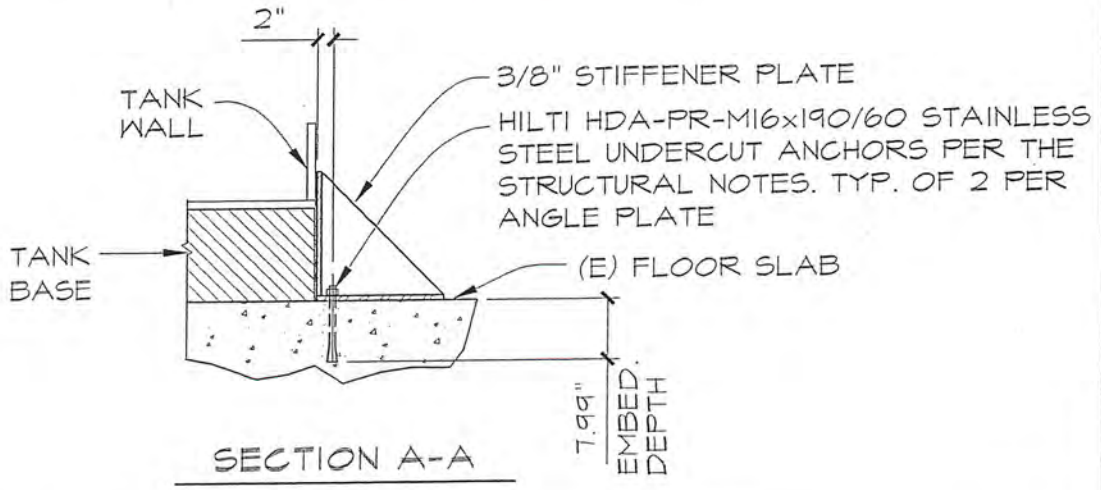

SECTION A-A

N.T.S.

tobey wade
CONSULTING
329 Flint Street
Reno, Nevada 89501
Tel. (775) 324-7757 Fax (775) 324-7797

PHILIP SERVICES CORPORATION
FERNLEY FACILITY
TANK NO's 201-208
ANCHORAGE DETAILS
FERNLEY, NEVADA

Project No.
R115-07-08

ADDITION DATE 10/09/09
Date: OCT. 5, 2009
REVISION NUMBER 1

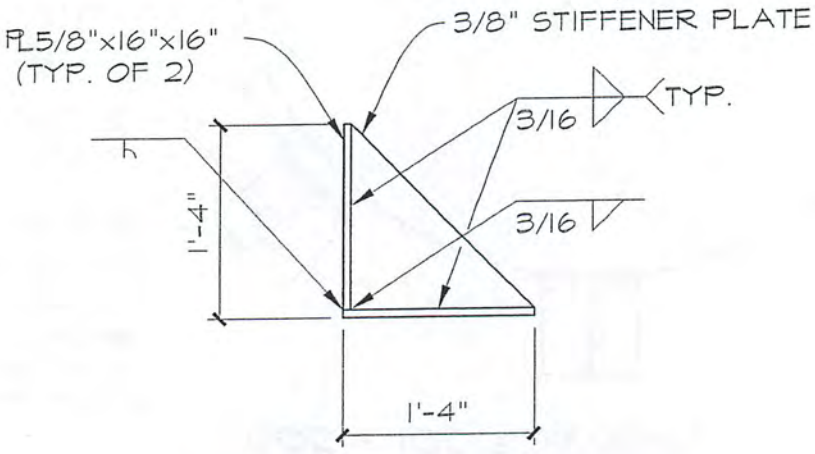

ANGLE PLATE DETAIL

SCALE: 3/4"=1'-0"

tobey wade
CONSULTING
329 Flint Street
Reno, Nevada 89501
Tel. (775) 324-7757 Fax (775) 324-7797

PHILIP SERVICES CORPORATION
FERNLEY FACILITY
TANK NO's 201-208
ANCHORAGE DETAILS
FERNLEY, NEVADA

Project No.
R115-07-08

ADDITION DATE 10/09/09
Date: OCT. 5, 2009

REVISION NUMBER 1

SCHIFF ASSOCIATES
FIFTY YEARS OF PROFESSIONALISM

gbell@schiffassociates.com

www.schiffassociates.com
Consulting Corrosion Engineers – Since 1959

October 6, 2009 via email to: Burgess, Aubry [ABurgess@pscnow.com]

PSC ENVIRONMENTAL SERVICES
2095 Newlands Drive E
Fernley, NV 89408

Attention: Mr. Aubry Burgess
Maintenance Supervisor

Re: **Material Compatibility/Corrosion Certification Letter for PLANNED Tank 203 for Cyanide/Alkaline Storage Tanks**
Amended Tank Replacement Plan
Fernley, NV
SA#08-1383LGL

Dear Mr. Burgess:

We have conducted the following investigations and research relative to the suitability and compatibility of the 6,250 Gallon sloped bottom High Density Polyethylene (HDPE) tanks fabricated by PolyProcessing with OR-1000™ lining system for cyanide/alkaline storage at ambient temperatures:

1) Reviewed PolyProcessing Company's product information provided on tank design and compatibility.

2) Conducted independent research on compatibility of high density cross-linked rotationally molded polyethylene for service at ambient temperature.

3) Visited the PSC facility in Fernley in December 2008 and March 2009 to understand the anticipated process flow and conditions of waste streams at the site.

4) Reviewed supplemental information requested from PolyProcessing Company regarding issues identified during site visit.

The tank design is suitable for cyanide/alkaline storage at ambient temperatures per the manufacturer's information in the position as Tank 203 in the waste processing stream of the PSC Facility as configured and intended per the Amended Tank Replacement Program outlined in the letter from Thomas Nelson of PSC to Nevada Division of Environmental Protection dated March 25, 2008.

ADDITION DATE 10/09/09

REVISION NUMBER 1

CERTIFICATION

I certify under penalty of law that this document and all attachments were prepared under my direction or supervision according to a system designed to assure that qualified personnel properly gather and evaluate the information submitted. Based on my inquiry of the person or persons who manage the system, or those persons directly for gathering the information, the information submitted is, to the best of my knowledge and belief, true, accurate, and complete. I am aware that there are significant penalties for submitting false information, including the possibility of fine and imprisonment for knowing violations.

CLOSURE

Our services have been performed with the usual thoroughness and competence of the engineering profession. No other warranty or representation, either expressed or implied, is included or intended.

Sincerely,
SCHIFF ASSOCIATES

GRAHAM E.C. BELL
EXP: 12-31-10
MECHANICAL

Graham E.C. Bell, PE
Principal Engineer
NACE International Corrosion Specialist #5350

Attachments: Proposed Storage Tank Drawing
Waste Information Provided by PSC on PolyProcessing Data Sheet
PolyProcessing Technical Bulletin, Chemical Resistance Technical Information
OR-1000 Tank Cut Sheet
OR-1000 Cut Sheet
OR-1000 Product Sheet
PolyProcessing Polyethylene Tank Life Expectancy
PolyProcessing Chemical Compatibility Data including Temperature Dependence
PolyProcessing Technical Bulletin, Crosslinked Polyethylene with OR-1000™ System, Dated June 2005, Rev. A

NON-CONTROLLED COPY

INFORMATION SUBJECT TO CHANGE WITHOUT NOTICE

VERIFY REV LEVEL OF PAPER COPY WITH REV LEVEL ON PPC WEB SITE

Proposed Storage Tank

NOZZLE SCHEDULE & ACCESSORIES						
SERVICE	MK	STOCK NO.	SIZE	FITTING	DEG	ELEV

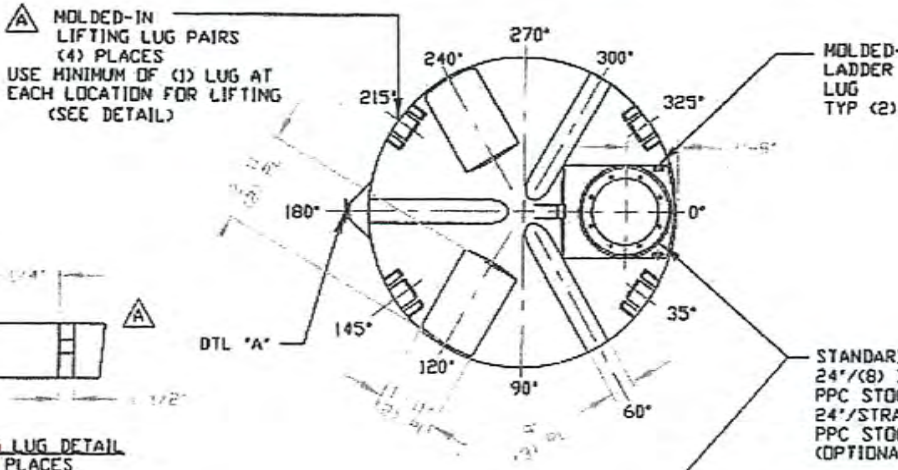

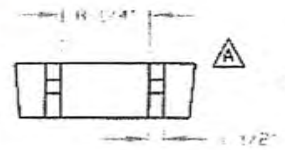

LIFTING LUG DETAIL
(4) PLACES
SCALE: 1"=1'-0"

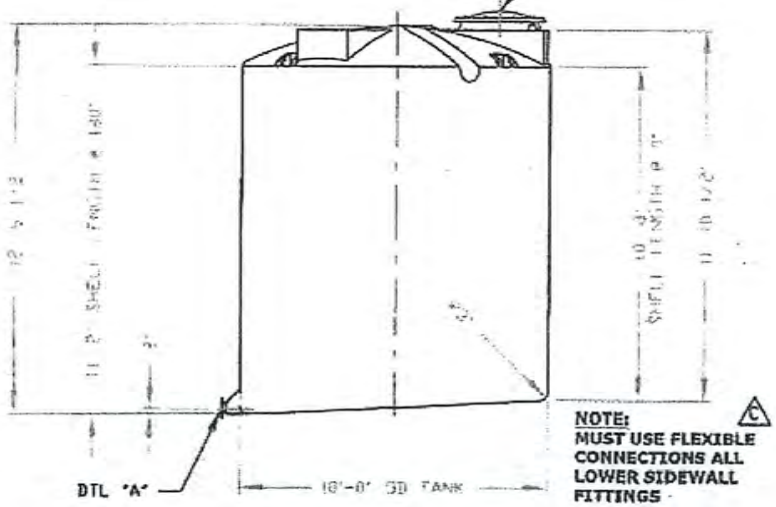

C NOTE:
MUST USE FLEXIBLE CONNECTIONS ALL LOWER SIDEWALL FITTINGS

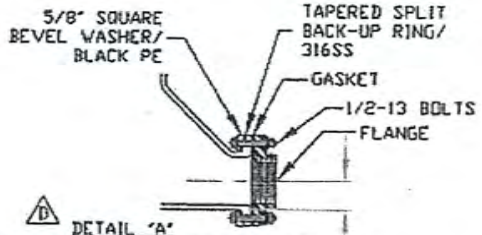

D DETAIL "A"
(INTEGRALLY MOLDED FLANGED OUTLET)
AVAILABLE IN 4" SIZE ONLY
SCALE: NONE

NOTES
1. THIS IS A COMPUTER GENERATED DWG. DO NOT REVISE BY HAND.
2. DIMENSIONS WILL VARY ±3% DUE TO VARIATIONS IN MULTIPLE MOLDS & CONDITIONS PREVALENT DURING MANUFACTURE & USAGE.
3. NO MOLDED IN GALLONAGE MARKERS THIS TANK.

CALCULATED CAPACITIES/ VOLUME IN U.S. GALLONS		
DESIGN CAP	DOME VOL	TOTAL VOL
6283	470	6753

CONFIDENTIAL PROPERTY OF POLY PROCESSING COMPANY NOT FOR REPRINT OR USE WITHOUT PERMISSION

DWG TITLE: 6250 GALLON SLOPE BOTTOM IMFO TANK

SCALE: 1/4"=1'-0"

DATE: 3/17/00

POLYPROCESSING COMPANY

Western Region

DR: MB WILKERSON

CK: D. RECTOR

SHEET: 1 OF 1

COMPUTER FILE: 11206250

REV: E

REVISIONS
REV "E" REVISED FOR MOLD MODIFICATIONS BY:JB 6/16/053 CK:WM
REV "D" REVISED IMFO STYLE BY:JB 4/30/03 CK:WM
REV "C" ADDED FITTING NOTE BY:JB 3/3/02 CK:MBW
REV "B" REVISED STOCK NUMBER BY:JB 3/3/02 CK:MBW
REV "A" ADDED LIFTING LUGS & DETAIL BY:JB 10/31/02 CK:WM

Table I

The following chemicals do not attach or permeate high density crosslinkable polyethylene resins up to 100° F. Each application should be considered individually. All concentrations apply except where noted.

- Acetic Acid <1%
- Aluminum Salts
- Alum
- Ammonium Hydroxide
- Ammonium Salts
- Amyl Alcohol
- Antimony Salts
- Arsenic Acid
- Barium Hydroxide
- Benzene Sulfonic Acid <1%
- Bismuth Salts
- Boric Acid <10%
- Bromic Acid <10%
- Butanediol
- Butyl Alcohol
- Calcium Hydroxide
- Calcium Salts
- Chromic Acid<50%
- Citric Acid <1%
- Copper Salts
- Detergents
- Diazo Salts
- Diethyl Carbonate
- Diethanol Amine
- Diethylene Glycol
- Diglycolic Acid
- Dimethylamine
- Dimethyl Formamide
- Ethyl Alcohol
- Ethylene Glycol
- Ferric Salts
- Ferrous Salts
- Fluoboric Acid <5%
- Fluosilicic Acid
- Formic Acid <1%
- Gallic Acid
- Gluconic Acid
- Hexanol
- Hydrazone<35%
- Hydrozine Hydrochloride
- Hydriodic Acid
- Hydrobromic Acid
- Hydrochloric Acid <5%
- Hydrofluoric Acid <5%
- Hydrofluorosilicic Acid <5%
- Hydrogen Peroxide<52%
- Hydrogen Phosphide
- Hydroquinone
- Hypochorous Acid
- Iodine Solutions
- Lactic Acid
- Latex
- Lead Acetate
- Magnesium Salts
- Mercuric Salts
- Mercurous Salts
- Mercury
- Methyl Alcohol
- Methylsulfuric Acid
- Michel Salts
- Nicotinic Acid
- Nitric Acid<50%
- Oxalic Acid <1%
- Perchloric Acid <1%
- Phenol<10%
- Potassium Hydroxide
- Potassium Salts
- Phosphoric Acid
- Photographic Solutions
- Propyl Alcohol
- Propylene Glycol
- Sea Water
- Selenic Acid <1%
- Sewage
- Silicic Acid
- Silver Salts
- Soap Solutions
- Sodium Ferricyanide
- Sodium Ferrocyanide
- Sodium Hydroxide
- [1]Sodium Hypochlorite<9%
- Sodium Salts
- Sodium Sulfonates
- Stanic Salts
- Stannous Salts
- Starch Solutions
- Stearic Acid
- [1]Sulfuric Acid <80%
- Sulfurous Acid
- Sugar Solution
  - Glucose
  - Lactose
  - Sucrose, etc.
- Tannic Acid
- Tanning Extracts
- Tartaric Acid
- Titinium Acid
- Toluene Sulfonic Acid
- Triethanolamine
- Urea
- Vinegar
- Wetting Agents
- Zinc Salts

[1]Concentrations above stated percentage require special considerations, contact factory for guidelines concerning these applications.

Table II

The following oils and organic chemicals do not attack HDXLPE resins. They will be absorbed into the wall of the tank; however, there should be no loss of chemical. Because of this absorption, no chemical other than the original should be stored in the tank as long as contamination may result as the absorbed oil is leached out. Storage at temperatures up to 100° F are possible provided the effects of the absorption on the properties of the tank are not prohibitive.

Fatty Acids	Mineral Oils	Animal Fats	Vegetable Oil
Butyric	Lube	Lard	Corn
Lauric	Transformer	Fish Oil	Coconut
Linoleic	Hydraulic	Musk Oil	Cottonseed
Oleic		Whale Oil	Olive
Palmitic			Peanut
Stearic			

Table III

The following organic chemicals do not attack high density crosslinkable polyethylene resins. They will be absorbed into the wall of tank and a permeation loss will occur. Because of this permeation and the effect it has on the physical properties of the tank, it is generally not recommended that these chemicals be storage at room temperatures above 100° F. However, their use largely depends on such factors as size of tank, its location, toxicity of the chemical, and applicable codes such as NFPA, OSHA, etc.

- Aniline
- Benzene
- Carbon Tetrachloride
- Chlorabenzene
- Cychohexanol
- Cycolchexnone
- Dibutylphthalate
- Diesel Fuel
- Dimethylamine
- Ethyl Butyrate
- Ethylene Chlorohydin
- Fuel Oil
- Furfural
- Aliphatic Hydrocarbons (hexane, octane, hexene, octene, etc.)
- Jet Fuel
- Gasoline
- Nitrobenzene
- Octyl Cresol
- Propylene Dichloride
- Toluene
- Xylene

This document reports accurate and reliable information to the best of our knowledge, but our suggestions and recommendations cannot be guaranteed because the conditions of use are beyond our control. Information presented herein is given without reference to any patent questions which may be encountered in use thereof. Such questions should be investigated by those using this information. Poly Processing Company assumes no responsibility for the use of information presented herein and hereby disclaims all liability in regard to such use.

POLYPROCESSING COMPANY

Providing Solutions Through Innovation

Chemical Resistance

Chemical Resistance

Chemical "resistance" and "compatibility" are synonymous terms used in relation to the ability of a plastic to function in different environments. In regards to polyethylene chemical storage tanks, chemical resistance encompasses the total effect a product would have on a tank. The factors that make up the overall compatibility of a chemical to a rotomolded tank are (1) chemical attack, (2) absorption or permeation, and (3) solubility and stress crack resistance.

Chemical Attack

By definition, chemical attack involves an actual chemical reaction with the plastic. This can be a breaking of molecular chains and/or an addition of chemical groups to the molecule. For example, in the case of an oxidation reaction with polyethylene, both occur with the addition of carbonyl groups. This causes and eventual loss of properties to the point that a tank would not be serviceable.

Polyethylene in general is one of the most inert plastics available. Very few chemicals react with polyethylene and with those that do, the rate is relatively slow. The ultra high molecular weight characteristics of high density crosslinked polyethylene resins after crosslinking makes these particular polyethylenes even more resistant than other grades.

Permeation

This involves the physical absorption of the chemical into the polyethylene. If this is a volatile chemical, then an actual loss of the product can occur as the chemical vaporizes from the outer wall of the tank. The amount of absorption is generally limited to 3 to 7 percent by weight of the polyethylene. Also, the loss of volatile products is relatively small. For example, a 25-gallon tank with a 50-mil wall will only lose between 5 and 6 grams of gasoline per day due to permeation. The thicker the wall, the lower the rate of loss.

The absorption of a product into the wall of a tank will cause more property changes. The tensile strength is reduced approximately 15 to 20 percent and stiffness approximately 20 percent. Normally, this does not affect the utility of a tank or prohibit the application. The property losses due to permeation are offset by increasing the design wall thickness of the tank.

Elevated Temperature

The effects of elevated temperature (100° F or greater) on polyethylene tank are predictable and expected. Polyethylene, which is a flexible material, becomes even more flexible when heated. It will, therefore, bulge more at an elevated temperature than at room temperature.

By looking at the design hoop stress values for various temperatures, one can see the effects of increased temperature services. The values remain relatively constant up to 100° F, after which they begin to decrease.

100° F	600 psi	130° F	450 psi
110° F	550 psi	140° F	400 psi
120° F	500 psi	150° F	300 psi

A rise in temperature of 50° F (100° F to 150° F) reduces the design hoop stress value from 600 psi to 300 psi and doubles the required wall thickness. It follows that simply increasing the service rating of a tank from 1.35 S.G. to 1.65 S.G., or even to 1.90 S.G. is not necessarily sufficient. The proper wall thickness must be calculated for the temperature of service.

The maximum temperature rating for crosslinked polyethylene material is 150° F. Above that temperature the thermal stabilizers in the plastic are more rapidly consumed. Continued use will cause embrittlement and a reduction in the useful life of the part. Temperature services from 100° F to 150° F are acceptable applications, however, thicker tank walls are required to maintain a safe design. Consult the factory when application such as these arise.

Authorized Distributor:

Toll-Free 1-866-590-6845

www.polyprocessing.com

Table I

The following chemicals do not attach or permeate high density crosslinkable polyethylene resins up to 100° F. Each application should be considered individually. All concentrations apply except where noted.

Acetic Acid
Aluminum Salts
Alum
Ammonium Hydroxide
Ammonium Salts
Amyl Alcohol
Antimony Salts
Arsenic Acid
Barium Hydroxide
Benzene Sulfonic Acid
Bismuth Salts
Boric Acid
Bromic Acid
Butanediol
Butyl Alcohol
Calcium Hydroxide
Calcium Salts
Chromic Acid<50%
Citric Acid
Copper Salts
Detergents
Diazo Salts
Diethyl Carbonate
Diethanol Amine
Diethylene Glycol
Diglycolic Acid
Dimethylamine
Dimethyl Formamide
Ethyl Alcohol
Ethylene Glycol
Ferric Salts
Ferrous Salts
Fluoboric Acid
Fluosilicic Acid
Formic Acid
Gallic Acid
Gluconic Acid
Hexanol
Hydrazone<35%
Hydrozine Hydrochloride
Hydriodic Acid
Hydrobromic Acid
Hydrochloric Acid
Hydrofluoric Acid
Hydrofluorosilicic Acid
Hydrogen Peroxide<52%
Hydrogen Phosphide
Hydroquinone
Hypochorous Acid
Iodine Solutions
Lactic Acid
Latex
Lead Acetate
Magnesium Salts
Mercuric Salts
Mercurous Salts
Mercury
Methyl Alcohol
Methylsulfuric Acid
Michel Salts
Nicotinic Acid
Nitric Acid<50%
Oxalic Acid
Perchloric Acid
Phenol<10%
Potassium Hydroxide
Potassium Salts
Phosphoric Acid
Photographic Solutions
Propyl Alcohol
Propylene Glycol
Sea Water
Selenic Acid
Sewage
Silicic Acid
Silver Salts
Soap Solutions
Sodium Ferricyanide
Sodium Ferrocyanide
Sodium Hydroxide
[1]Sodium Hypochlorite<9%
Sodium Salts
Sodium Sulfonates
Stanic Salts
Stannous Salts
Starch Solutions
Stearic Acid
[1]Sulfuric Acid <80%
Sulfurous Acid
Sugar Solution
Glucose
Lactose
Sucrose, etc.
Tannic Acid
Tanning Extracts
Tartaric Acid
Titinium Acid
Toluene Sulfonic Acid
Triethanolamine
Urea
Vinegar
Wetting Agents
Zinc Salts

[1]Concentrations above stated percentage require special considerations, contact factory for guidelines concerning these applications.

Table II

The following oils and organic chemicals do not attack HDXLPE resins. They will be absorbed into the wall of the tank; however, there should be no loss of chemical. Because of this absorption, no chemical other than the original should be stored in the tank as long as contamination may result as the absorbed oil is leached out. Storage at temperatures up to 100° F are possible provided the effects of the absorption on the properties of the tank are not prohibitive.

Fatty Acids	**Mineral Oils**	**Animal Fats**	**Vegetable Oil**
Butyric	Lube	Lard	Corn
Lauric	Transformer	Fish Oil	Coconut
Linoleic	Hydraulic	Musk Oil	Cottonseed
Oleic		Whale Oil	Olive
Palmitic			Peanut
Stearic			

Table III

The following organic chemicals do not attack high density crosslinkable polyethylene resins. They will be absorbed into the wall of tank and a permeation loss will occur. Because of this permeation and the effect it has on the physical properties of the tank, it is generally not recommended that these chemicals be storage at room temperatures above 100° F. However, their use largely depends on such factors as size of tank, its location, toxicity of the chemical, and applicable codes such as NFPA, OSHA, etc.

Anitine
Benzene
Carbon Tetrachloride
Chlorabenzene
Cychohexanol
Cycolohexnone
Dibutylphthalate
Diesel Fuel
Dimethylamine
Ethyl Butyrate
Ethylene Chlorohydin
Fuel Oil
Fufural
Aliphatic Hydrocarbons (hexane, octane, hexene, octene, etc.)
Jet Fuel
Gasoline
Nitrobenzene
Octyl Cresol
Propylene Dichloride
Toluene
Xylene

This document reports accurate and reliable information to the best of our knowledge, but our suggestions and recommendations cannot be guaranteed because the conditions of use are beyond our control. Information presented herein is given without reference to any patent questions which may be encountered in use thereof. Such questions should be investigated by those using this information. Poly Processing Company assumes no responsibility for the use of information presented herein and hereby disclaims all liability in regard to such use.

OR-1000™ Tank Systems!

Specify Peace of Mind!

NSF/ANSI 61

- **OR-1000™ Engineered System**
- **4 Times Antioxidants**
- **Certified for 31+ Hazardous and Corrosive Chemical Applications**
- **Design Temperatures to 140°F**
- **Complies with State Regulations**

Provide Longer Tank Life with an IMFO®/OR-1000™ System!

Increase Tank Longevity!

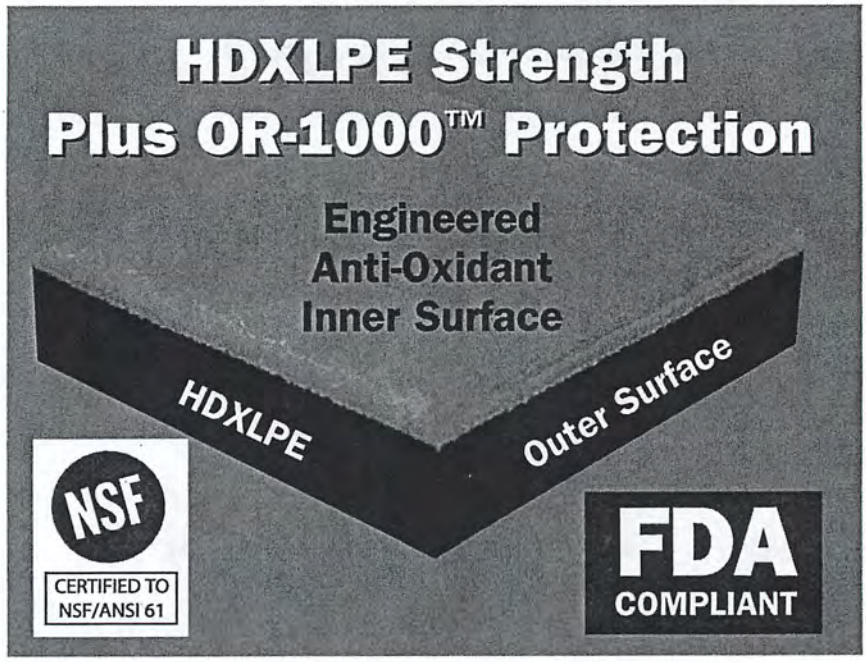

- Proven System since 1995
- Increased Chemical Resistance
- Complete Drain
- Maintenance Free
- Avoids Confined-Space Entry
- 4x Anti-Oxidant Package
- Sodium Hypochlorite/Sulfuric Acid/ Hydrochloric Acid applications*

*See warranty information on page 26

POLYPROCESSING COMPANY
Providing Solutions Through Innovation

Storage Solution: OR-1000 Liner

Poly Processing Company is the only rotational molding company with the ability to provide the strength, durability and safety of HDXLPE with the added value of an oxidation resistant liner, OR-1000, integrally molded as the interior surface of the part.

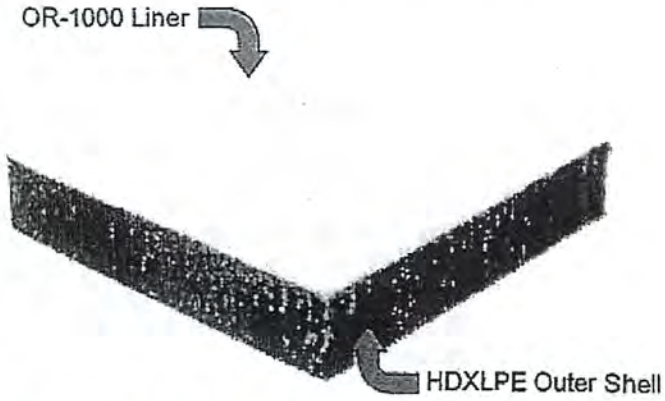

The liner thickness is in addition to the ASTM design thickness of the HDXLPE outer shell for the intended chemical application. This crosslink / OR-1000 combination has been successfully used for Sodium Hypochlorite and Sulfuric Acid services since 1995. To even further enhance the value of this combination, we are now adding this lining to the new high performance Metallocene High Density Crosslinked resin.

The reason for the OR-1000 material is simple. To develop the outstanding long-term properties of HDXLPE, the amount of anti-oxidants must be limited. Although HDXLPE has superior properties to any other rotational mold grade polyethylene, in a few highly oxidizing chemical applications, its optimum service life has not been obtained. To capitalize on the superior properties and performance characteristics of HDXLPE, the OR-1000 liner was developed to serve as an oxidation barrier to improve service life in oxidizing chemical applications. This combination provides unmatched performance and value to our customers.

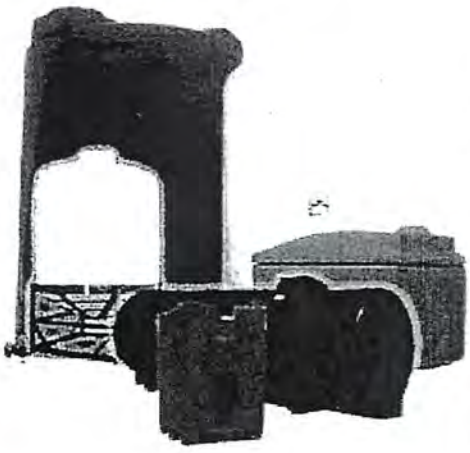

Sodium Hypochlorite and Sulfuric Acid remain very difficult storage and handling applications. However, we continue to bring you the very best in value, service and high performance products -- Poly Processing Company, *providing solutions through innovation*.

CERTIFIED ISO 9001

member

THE CHLORINE INSTITUTE, INC.
member

Authorized Distributor:

1-866-590-6845
www.polyprocessing.com

POLYPROCESSING COMPANY

Providing Solutions Through Innovation

Polyethylene Tank Life Expectancy

For 35 years, Poly Processing Company has been **Helping Our Customers . . . Solve Problems** associated with storing hazardous chemicals, **Managing Risk** with the Environment and Employee Safety and **Growing Their Profits** with Increased Tank Longevity and Operating Efficiencies. We have specialized in providing hazardous chemical storage solutions to the industrial, water and waste water markets. While we manufacture both linear and crosslink polyethylene storage tanks; in **hazardous chemical environments, crosslink polyethylene** is the material of choice. Our customers report crosslink polyethylene tanks providing service for 10+ years with 15 to 20 years of tank service being common. However; there are many factors and variables that have an effect on the useful life of any tank including polyethylene.

Chemical, Concentration and Temperature: The chemical, concentration and operating temperature are all factors influencing the life expectancy of a polyethylene tank. For example, high concentrations of Sulfuric Acid are stress cracking agents and are more aggressive oxidizers than less concentrated chemicals such as 25% Caustic Soda. For this reason, Poly Processing offers our customers the OR-1000™ Anti-Oxidant Systems. Another example: 12% Sodium Hypochlorite will degrade from UV exposure and elevated temperatures. As it degrades, sediment builds in the bottom of the tank leading to a shorter tank life. To eliminate this sludge buildup, Poly Processing Company offers our customers the IMFO® (Integrally Molded Flanged Outlet). The IMFO® design promotes continuous "system" flushing increasing tank life and operating efficiencies. Poly Processing Company chemical storage tanks are constructed from premium materials and designed specifically for the chemical, concentration and temperature requirements.

Installation and Piping: The single biggest reason for tank life reduction is improper tank installation and **"hard"** piping. Polyethylene's broad spectrum of chemical resistance vs. other materials of construction is based on its ability to expand and contract. Flexible connections compensate for tank expansion and contraction promoting a longer useful life. It is important to follow Poly Processing Company's Installation Manual Instructions during the installation process.

Venting: Often overlooked, venting is a very important step that promotes tank longevity. Polyethylene tanks are rated at atmospheric pressure/vacuum. Adequate vent size is always based on flow and delivery rates so it is important to gather the following information to adequately determine the proper venting requirements:

1) Is the tank to be filled pneumatically?
2) Is the tank to be vented to atmosphere?
3) Does the length of the vent exceed 3 feet (piped to a central vent system)
4) Is a fume scrubbing system to be used?
5) Are vent screens to be used (restricts flow)?
6) Does the tank manufacturer offer a method of "emergency venting" to prevent over-pressurization?

Other Items Effecting Tank Longevity:

1) Continuous cycling (fill / discharge)
2) Excessive agitation
3) Mobile applications

For further information about your specific needs or applications, please contact Poly Processing Company at 1-866-590-6845 or visit our website at www.polyprocessing.com.

POLYPROCESSING
Providing Solutions Through Innovation

Chemical Resistance

Chemical Resistance

Chemical "resistance" and "compatibility" are synonymous terms used in relation to the ability of a plastic to function in different environments. In regards to polyethylene chemical storage tanks, chemical resistance encompasses the total effect a product would have on a tank. The factors that make up the overall compatibility of a chemical to a rotomolded tank are (1) chemical attack, (2) absorption or permeation, and (3) solubility and stress crack resistance.

Chemical Attack

By definition, chemical attack involves an actual chemical reaction with the plastic. This can be a breaking of molecular chains and/or an addition of chemical groups to the molecule. For example, in the case of an oxidation reaction with polyethylene, both occur with the addition of carbonyl groups. This causes and eventual loss of properties to the point that a tank would not be serviceable.

Polyethylene in general is one of the most inert plastics available. Very few chemicals react with polyethylene and with those that do, the rate is relatively slow. The ultra high molecular weight characteristics of high density crosslinked polyethylene resins after crosslinking makes these particular polyethylenes even more resistant than other grades.

Permeation

This involves the physical absorption of the chemical into the polyethylene. If this is a volatile chemical, then an actual loss of the product can occur as the chemical vaporizes from the outer wall of the tank. The amount of absorption is generally limited to 3 to 7 percent by weight of the polyethylene. Also, the loss of volatile products is relatively small. For example, a 25-gallon tank with a 50-mil wall will only lose between 5 and 6 grams of gasoline per day due to permeation. The thicker the wall, the lower the rate of loss.

The absorption of a product into the wall of a tank will cause more property changes. The tensile strength is reduced approximately 15 to 20 percent and stiffness approximately 20 percent. Normally, this does not affect the utility of a tank or prohibit the application. The property losses due to permeation are offset by increasing the design wall thickness of the tank.

Elevated Temperature

The effects of elevated temperature (100° F or greater) on polyethylene tank are predictable and expected. Polyethylene, which is a flexible material, becomes even more flexible when heated. It will, therefore, bulge more at an elevated temperature than at room temperature.

By looking at the design hoop stress values for various temperatures, one can see the effects of increased temperature services. The values remain relatively constant up to 100° F, after which they begin to decrease.

100° F	600 psi	130° F	450 psi
110° F	550 psi	140° F	400 psi
120° F	500 psi	150° F	300 psi

A rise in temperature of 50° F (100° F to 150° F) reduces the design hoop stress value from 600 psi to 300 psi and doubles the required wall thickness. It follows that simply increasing the service rating of a tank from 1.35 S.G. to 1.65 S.G., or even to 1.90 S.G. is not necessarily sufficient. The proper wall thickness must be calculated for the temperature of service.

The maximum temperature rating for crosslinked polyethylene material is 150° F. Above that temperature the thermal stabilizers in the plastic are more rapidly consumed. Continued use will cause embrittlement and a reduction in the useful life of the part. Temperature services from 100° F to 150° F are acceptable applications, however, thicker tank walls are required to maintain a safe design. Consult the factory when application such as these arise.

Crosslinked Polyethylene with OR-1000™ System
The #1 System for Oxidizing Chemical Environments

Poly Processing Company and other polyethylene tank manufacturers, as well as major polyethylene resin manufacturers have published many documents over the past several years discussing the benefits of certain rotational molding resins in acidic and alkaline chemical environments. The majority of these documents support the use of crosslinked polyethylene over linear polyethylene in acidic and basic chemical environments. These articles speak to the longevity of crosslinked polyethylene rotationally molded tanks, the safety of having polymer chains that are chemically bonded, and the leveraged investment of knowing that crosslinked polyethylene chemical storage tanks have been utilized for the last 35 years.

In 2001, one of the largest resin manufacturers in North America published a fairly extensive study which showed that their linear polyethylene in a lab environment performed as well as, if not better than crosslinked polyethylene, in acidic and alkaline chemical applications. This study, coupled with marketing efforts by linear polyethylene tank manufacturers who do not rotationally mold crosslinked polyethylene tanks in the course of their normal business, has given rise to some industry confusion and misunderstanding about what is the best resin system for storing oxidizing chemicals. We will summarize the facts about rotationally molded polyethylene storage tanks and the value of an engineered antioxidant resin system coupled with the long-term performance of crosslinked polyethylene.

We would first like to discuss the lab study performed by the linear resin manufacturer. The study compared crosslinked polyethylene with linear polyethylene in sulphuric acid and sodium hypochlorite environments. The sulphuric acid was concentrated approximately 93%-97%, and the Sodium Hypochlorite was around 14% concentration. The lab study describes how the crosslinked polyethylene and linear polyethylene were submersed in the chemicals and then tested using ARM Impact testing as well as Environmental Stress Crack Resistivity (ESCR) testing. The study concluded that the linear materials in a chemical resistivity mode held up as well as crosslinked materials in a lab environment. In addition, Higher ESCR properties are found in lower density materials like LLDPE or LDPE as compared to HDPE resins. It doesn't mean you want to use a tank made only from the lower density resins. ESCR shows how well the material performs in a pre-notched condition in the presence of certain chemicals.

The lab study performed by the resin manufacturer did not cover or discuss the long-term properties of these materials in harsh, environmental conditions. Over time, sodium hypochlorite and sulphuric acid create an oxidative environment, which remove hydrogen molecules from the polymer chains creating embrittlement. This phenomenon is inherent to all types of polyethylene, since they are hydrocarbon based molecules. Storing acids and bases in actual everyday environments presents a completely different set of parameters and stresses that have little to do with the lab environment.

Poly Processing Company has been aware of this relationship between ESCR and Chemical resistance for many years and has been an industry leader in creating engineered resin systems which give the end user the ability to have excellent oxidation and chemical resistivity without sacrificing long term performance and toughness. These engineered resin systems deliver peace of mind, a margin of safety, and leveraged investment to the end user.

Another critical factor to consider when storing acids and bases in actual everyday environments is the Long Term Hydrostatic Strength (LTHS) of the polyethylene. LTHS properties are one of the keys to providing the continued strength necessary for tanks during its service life. This property is especially important in field applications where tanks can see elevated temperatures approaching

140°F. LTHS tests are conducted at both ambient temperature (73°F) and at elevated temperature (140°F) since actual field conditions are typically in this range.
Figure 1.

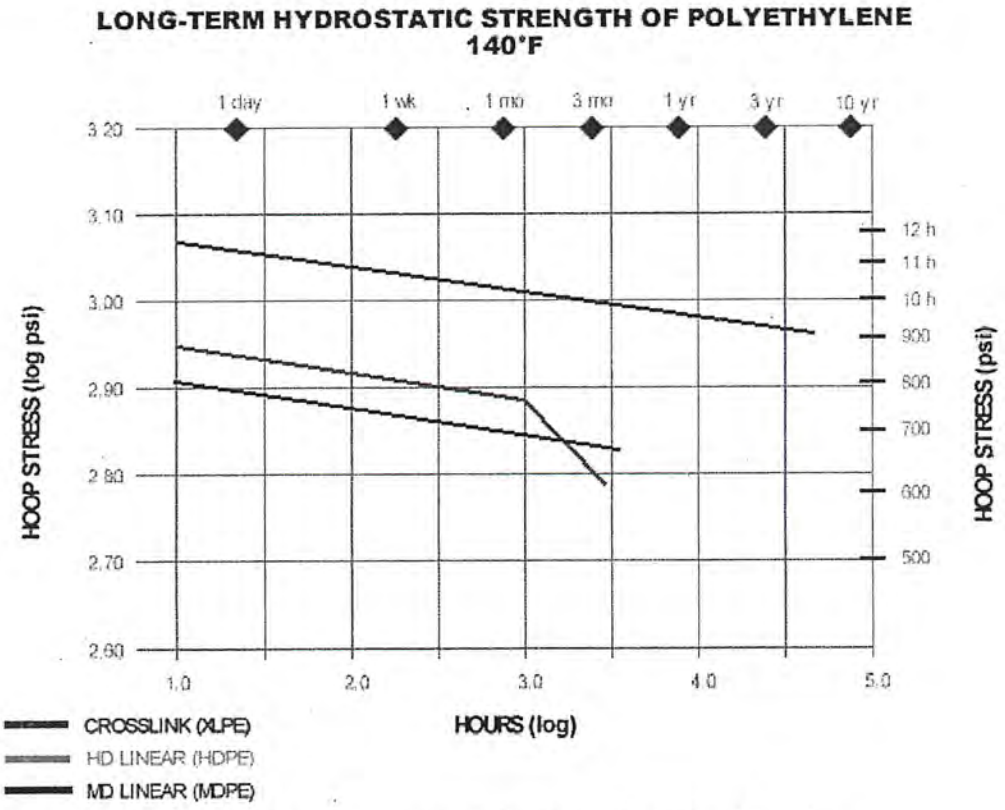

Source: Chevron Phillips Company, Plastics Technical Center

The rapid deterioration in properties is indicated by a "knee" in the curve of hoop strength versus time as illustrated in Figure 1 above. Even high performance HDPE will develop a LTHS knee at around 1000 hours (log 3), and some MDPE products will have a knee in less than 10,000 hours (log 5). This type of performance substantially reduces the expected long-term performance at elevated temperatures. Crosslinked polyethylene has been tested to 50,000 hours at 140°F and shows no signs of a knee.

There is still the need to surround the oxidation resistant material with a robust resin system that will give you longer useful tank life, superior impact resistance, and greater tensile strength for a safer product. That is why crosslinked polyethylene is still the material of choice for industrial and municipal chemical applications.

Poly Processing Company has been the leader in rotationally molded crosslinked polyethylene storage tanks for 35 years. We work with the leading universities in the country to develop engineered resin systems that will perform above and beyond any standard "off the shelf" polyethylene in harsh, oxidizing environments. One of the systems we developed is the OR-1000™ system. This system uses the best linear resin for chemical resistivity combined with four (4) times the antioxidant power and a crosslink outer wall for maximum long-term performance and durability.

Poly Processing Company developed the OR-1000™ oxidation resistance system in 1995. This lower density linear material serves to increase the service life of crosslinked polyethylene tanks in oxidizing chemical service (Sodium Hypochlorite, Sulphuric Acid, Hydrochloric Acid, and Nitric Acid). To develop the outstanding long-term physical properties of crosslinked polyethylene, the amount of antioxidant compounded into the material has to be limited. Although crosslinked polyethylene has superior properties to any other rotational molding grade polyethylene, the tank's useful service life will be reduced without the OR-1000™ system. In order to utilize the superior properties of crosslinked polyethylene, the OR-1000™ system was developed to greatly improve the service life in harsh oxidizing chemical environments. This material is a medium density linear based resin with a large amount of antioxidant added to it for the best oxidizing resistance system in the industry. The OR-1000™ system has been engineered to prevent de-lamination during the useful life of the tank.

To compare the effect of oxidizing chemicals on the OR-1000™ system and crosslinked polyethylene, 1/8" thick tensile bars of both OR-1000™ and crosslinked polyethylene were submerged in a manufacturer's storage tank. This tank handled a highly oxidizing chemical, 17% Sodium Hypochlorite, and was emptied and filled at least once a day. Every 30 days, samples were pulled and tensile and percent elongation was determined as well as ESCR tests. Oxidization or reduction in physical properties is indicated by reduced in elongation. After six months of testing, the elongation of the crosslinked polyethylene tensile bars had decreased 26% while OR-1000™ elongation had no change. This is due to the added antioxidant in the OR-1000™ system as well as the fact that the linear material used in the testing was a lower density material than the crosslinked material.

Crosslinked polyethylene provides superior environmental stress cracking resistance (ESCR) or sometimes generally referred to as resistance to slow crack growth (SCG) in almost all chemical applications. Two tests which clearly show this difference are the bent strip ESCR (ASTM D1693) with 10% Igepal where crosslink polyethylene does not fail in over 1000 hours compared to typical values for LMDPE of <400 hours. Another test which shows the slow crack growth difference with no surfactant (in air) is the polyethylene notch test (PENT) described in ASTM F 1473 and crosslink polyethylene again does not fail in over 1000 hours and LMDPE grades fail in <100 hours. Even though linear polyethylene grades with improved ESCR have become available over the past 10 to 15 years, they still do not match crosslinked polyethylene in SCG performance. Slow crack growth resistance as was shown earlier in this paper is an important property that can affect the long-term performance of tanks.

The best of both worlds is having the OR-1000™ system for the long-term oxidative resistivity characteristics (as discussed in the resin manufacturer's lab study), with the robustness of crosslinked polyethylene for the long-term durability and long useful life that is expected of industrial grade chemical storage tanks. This is why so many chemical manufacturers and distributors choose Poly Processing Company for engineered chemical storage solutions.

Crosslinked polyethylene tanks with the OR-1000™ system varying in sizes from 500 gallons to 14,950 gallons have been in true industrial and municipal use for over 10 years with excellent results. Poly Processing Company backs every crosslinked polyethylene tank with the OR-1000™ system with a 5 year full warranty on all suitable applications including sodium hypochlorite and hydrochloric acid, sulfuric acid 80%-98% carries a full 3 year warranty

Store your harsh oxidizing chemicals with the confidence and peace of mind that you deserve. Specify Poly Processing Company's crosslinked polyethylene tanks with the OR-1000™ system for longevity, safety, and leveraged investment. Please consult your distributor or Poly Processing Company at 1-866-590-6845 for your specific requirements.

tobeywade
STRUCTURAL ENGINEERS

May 6, 2010
Project No. R115-07-08

Mr. Aubry Burgess, Maintenance Supervisor
PHILIP SERVICES CORPORATION
ENVIRONMENTAL SERVICES DIVISION
2095 Newlands Drive East
Fernley, NV 89408

RE: TANK 203 CERTIFICATION REPORT

Dear Mr. Burgess:

In accordance with the Fernley Facility Amended Tank Replacement plan as prepared by Philip Services Corporation (PSC) and dated March 25, 2008, each tank is required to be certified by Independent Registered Professional Engineers (IRPE's) prior to being placed into service. This report has been prepared to document the evaluations as performed by Tobey-Wade Consulting.

Background

Tank 203 is a Crosslinked Polyethethylene Tank with a 6,250 gallon capacity as manufactured by Poly Processing Company. Poly Processing has provided data relative to the tank's strength and its chemical resistance capabilities. Poly Processing has also provided an opinion as to any offsets observed in the tank shell.

Schiff Associates has evaluated the tank's suitability and compatibility for its proposed use in PSC's facility. Their conclusions have been provided under separate cover to PSC.

Findings

Based on our research, analysis and structural observations, the following systems are in compliance with the Amended Tank Replacement plan:

- Tank 203 is situated on a reinforced concrete foundation system which is capable of adequately supporting the tank and its contents under static and dynamic conditions.
- Tank 203 is located in an area with sufficient secondary containment as required by 40 CFR Ch. I, 264.193.
- Tank 203 is stabile against overturning when subjected to loads based on 2006 International Building Code level seismic events.

- Tank 203 is anchored to prevent sliding when subjected to loads based on 2006 International Building Code (IBC) level seismic events. Structural Observation and Special Inspection of the anchorage system has been performed as required by the IBC. The Structural Observation and Special Inspection reports are attached.

- Tank 203 has been tested for leakage and found to be watertight. The Tank Leakage Test report is attached.

- The exterior of Tank 203's shell wall has been inspected and found to be generally undamaged. The Tank Shell Inspection report is attached.

Structural Observation, tank leakage inspections and tank shell inspections were performed by Tobey-Wade Consulting under my direct supervision. Special Inspections were performed by ICC-certified inspectors from Black Eagle Consulting based on anchorage requirements provided by Tobey-Wade Consulting.

Certification Statement

I certify under penalty of law that this report and all attachments were prepared under my direction and supervision in accordance with a system developed to assure that qualified personnel properly gather and evaluate the information submitted. Based on my inquiry of the person or persons who manage the system or those persons directly responsible for gathering the information, the information, submitted is, to the best of my knowledge and belief, true, accurate, and complete. I am aware that there are significant penalties for submitting false information, including the possibility of fines and imprisonment for knowing violations.

This report has been prepared in accordance with acceptable engineering practices and is subject to the assumptions and limitations stated in the report. Also note that this certification covers the aforementioned aspects of Tank 203 only.

Please feel free to contact me at your convenience should you have any questions relating to our findings.

Sincerely,
TOBEY-WADE CONSULTING

Terrence R. Tobey

Terrence R. Tobey, S.E.
Principal Structural Engineer

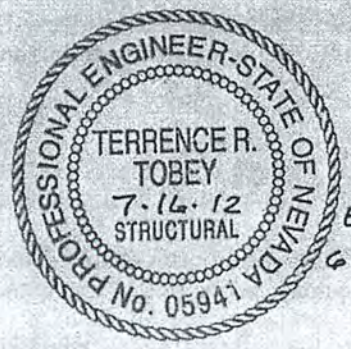

Exp. 6.30.14

NON-CONTROLLED COPY
INFORMATION SUBJECT TO CHANGE WITHOUT NOTICE
VERIFY REV LEVEL OF PAPER COPY WITH REV LEVEL ON PPC WEB SITE

Proposed Storage Tank

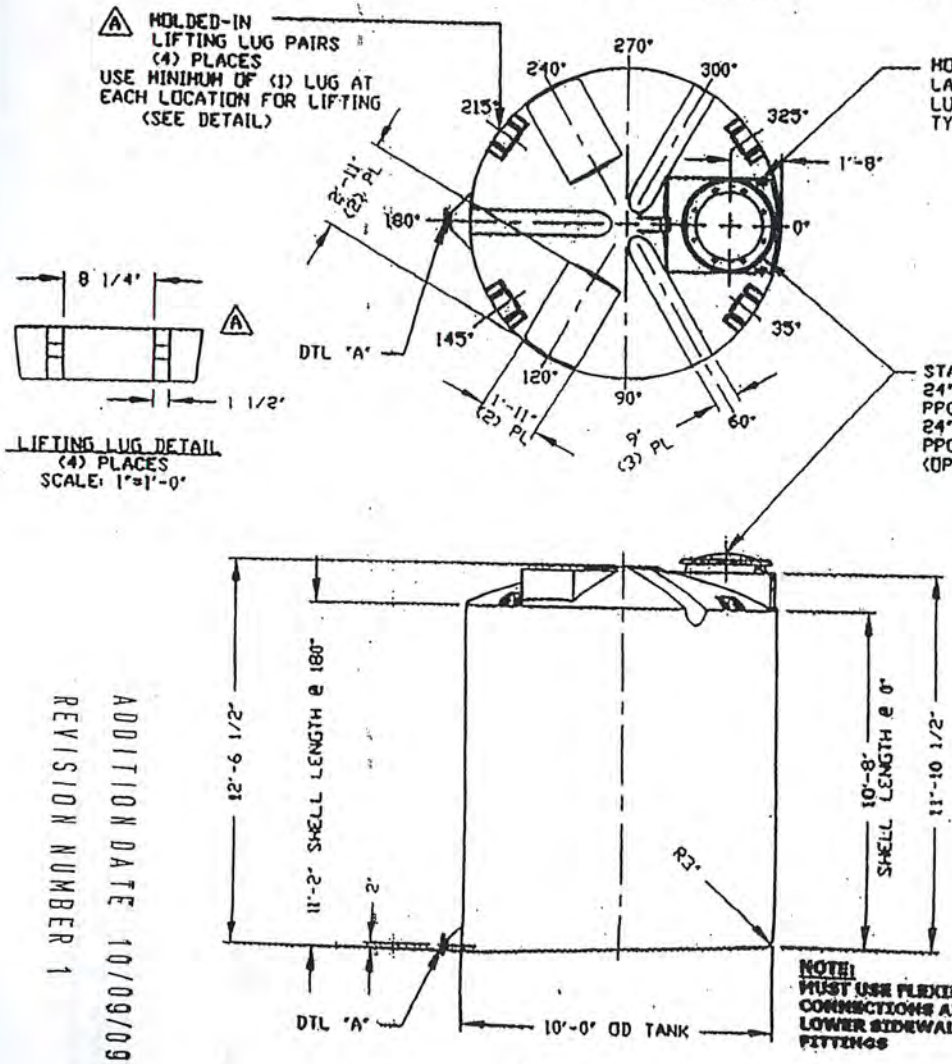

NOZZLE SCHEDULE & ACCESSORIES						
SERVICE	MK	STOCK NO.	SIZE	FITTING	DEG	ELEV

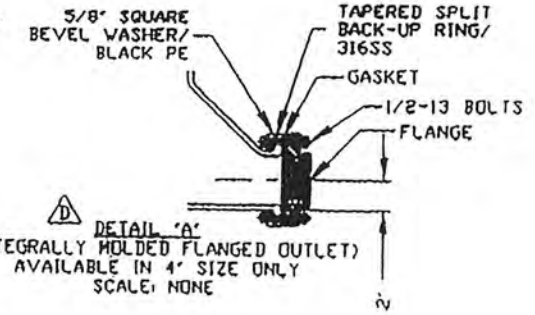

NOTES
1. THIS IS A COMPUTER GENERATED .DWG. DO NOT REVISE BY HAND.
2. DIMENSIONS WILL VARY ±3% DUE TO VARIATIONS IN MULTIPLE HOLDS & CONDITIONS PREVALENT DURING MANUFACTURE & USAGE.
3. NO HOLDED IN GALLONAGE MARKERS THIS TANK.

CALCULATED CAPACITIES/ VOLUME IN U.S. GALLONS		
DESIGN CAP	DOME VOL	TOTAL VOL
6283	470	6753

CONFIDENTIAL PROPERTY OF POLY PROCESSING COMPANY NOT FOR REPRINT OR USE WITHOUT PERMISSION

SUB TITLE: 6250 GALLON SLOPE BOTTOM IMFO TANK

SCALE: 1/4"=1'-0"	PolyProcessing Company	Western Region	BY: HB WILKERSON
DATE: 3/17/00			CC: D. RECTOR
		SHEET: 1 OF 1	COMPUTER FILE: 11206250 REV: E

REVISION HISTORY
REV "E" REVISED FOR HOLD MODIFICATIONS BY:JB 6/16/033 CK:VH
REV "D" REVISED IMFO STYLE BY:JB 4/30/03 CK:VH
REV "C" ADDED FITTING NOTE BY:JB 3/3/02 CK:HBW
REV "B" REVISED STOCK NUMBER BY:JB 3/3/02 CK:HBW
REV "A" ADDED LIFTING LUGS & DETAIL BY:JB 10/31/02 CK:VH

REVISION NUMBER 1
ADDITION DATE 10/09/09

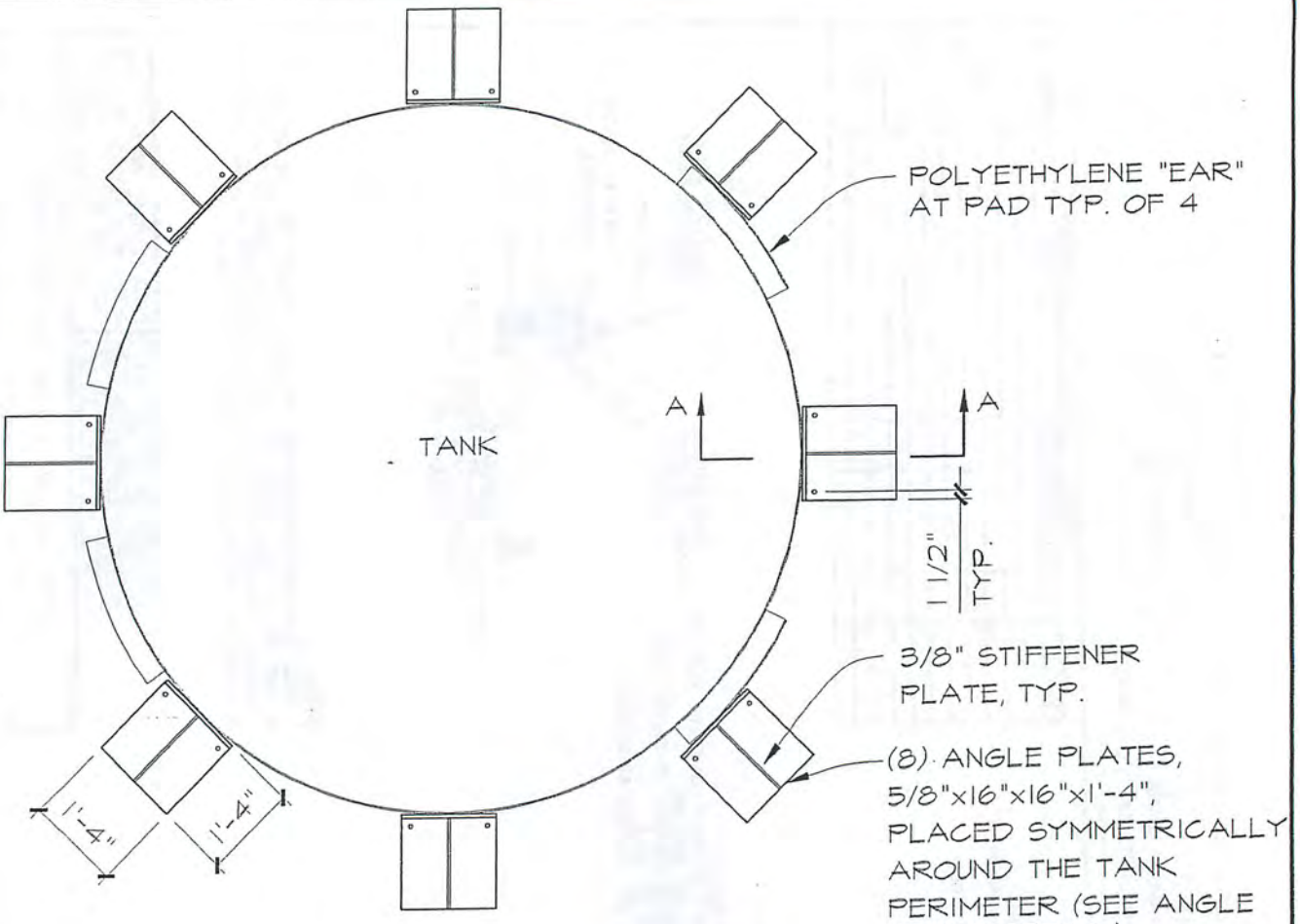

TANK NO's 201 - 208
CYLINDRICAL FLAT BOTTOM TANK

SCALE: 3/8"=1'-0"

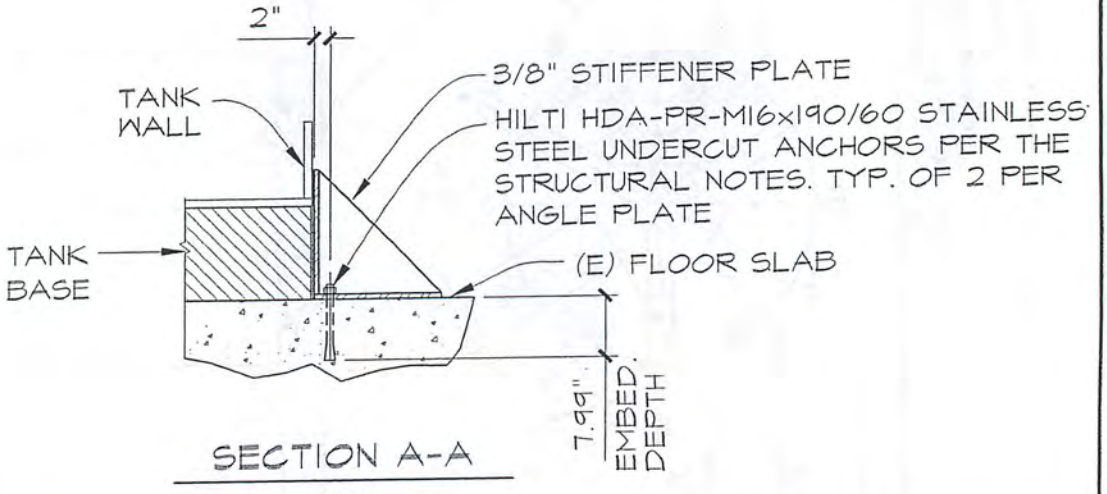

SECTION A-A

N.T.S.

tobey **wade**
CONSULTING
329 Flint Street
Reno, Nevada 89501
Tel. (775) 324-7757 Fax (775) 324-7797

PHILIP SERVICES CORPORATION
FERNLEY FACILITY
TANK NO's 201-208
ANCHORAGE DETAILS
FERNLEY, NEVADA

Project No.
R115-07-08

ADDITION DATE 10/09/09
Date: OCT. 5, 2009

REVISION NUMBER 1

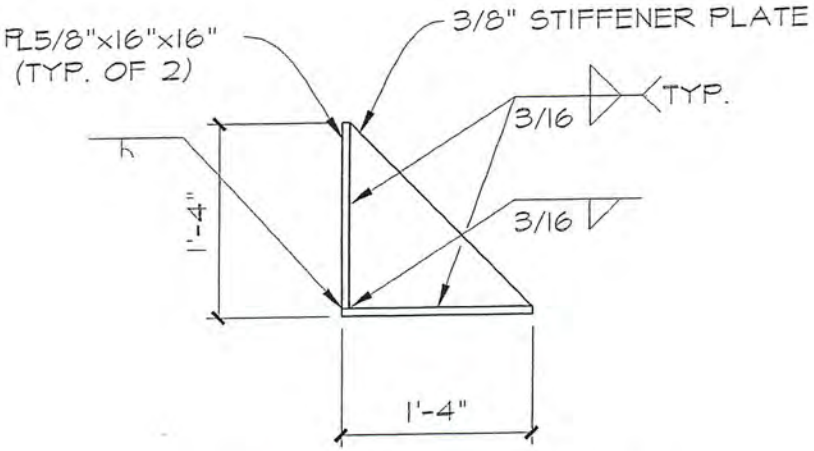

ANGLE PLATE DETAIL

SCALE: 3/4"=1'-0"

tobey **wade**
CONSULTING
329 Flint Street
Reno, Nevada 89501
Tel. (775) 324-7757 Fax (775) 324-7797

PHILIP SERVICES CORPORATION
FERNLEY FACILITY
TANK NO's 201-208
ANCHORAGE DETAILS
FERNLEY, NEVADA

Project No.
R115-07-08

ADDITION DATE 10/09/09
Date: OCT. 5, 2009
REVISION NUMBER 1

SCHIFF ASSOCIATES
FIFTY YEARS OF PROFESSIONALISM

gbell@schiffassociates.com

www.schiffassociates.com
Consulting Corrosion Engineers – Since 1959

October 6, 2009 via email to: Burgess, Aubry [ABurgess@pscnow.com]

PSC ENVIRONMENTAL SERVICES
2095 Newlands Drive E
Fernley, NV 89408

Attention: Mr. Aubry Burgess
Maintenance Supervisor

Re: **Material Compatibility/Corrosion Certification Letter for PLANNED Tank 204 for Cyanide/Alkaline Storage Tanks**
Amended Tank Replacement Plan
Fernley, NV
SA#08-1383LGL

Dear Mr. Burgess:

We have conducted the following investigations and research relative to the suitability and compatibility of the 6,250 Gallon sloped bottom High Density Polyethylene (HDPE) tanks fabricated by PolyProcessing with OR-1000™ lining system for cyanide/alkaline storage at ambient temperatures:

1) Reviewed PolyProcessing Company's product information provided on tank design and compatibility.

2) Conducted independent research on compatibility of high density cross-linked rotationally molded polyethylene for service at ambient temperature.

3) Visited the PSC facility in Fernley in December 2008 and March 2009 to understand the anticipated process flow and conditions of waste streams at the site.

4) Reviewed supplemental information requested from PolyProcessing Company regarding issues identified during site visit.

The tank design is suitable for cyanide/alkaline storage at ambient temperatures per the manufacturer's information in the position as Tank 204 in the waste processing stream of the PSC Facility as configured and intended per the Amended Tank Replacement Program outlined in the letter from Thomas Nelson of PSC to Nevada Division of Environmental Protection dated March 25, 2008.

ADDITION DATE 10/09/09
REVISION NUMBER 1

CERTIFICATION

I certify under penalty of law that this document and all attachments were prepared under my direction or supervision according to a system designed to assure that qualified personnel properly gather and evaluate the information submitted. Based on my inquiry of the person or persons who manage the system, or those persons directly for gathering the information, the information submitted is, to the best of my knowledge and belief, true, accurate, and complete. I am aware that there are significant penalties for submitting false information, including the possibility of fine and imprisonment for knowing violations.

CLOSURE

Our services have been performed with the usual thoroughness and competence of the engineering profession. No other warranty or representation, either expressed or implied, is included or intended.

Sincerely,
SCHIFF ASSOCIATES

GRAHAM E.C. BELL
EXP: 12-31-10
MECHANICAL

Graham E.C. Bell, PE
Principal Engineer
NACE International Corrosion Specialist #5350

Attachments: Proposed Storage Tank Drawing
Waste Information Provided by PSC on PolyProcessing Data Sheet
PolyProcessing Technical Bulletin, Chemical Resistance Technical Information
OR-1000 Tank Cut Sheet
OR-1000 Cut Sheet
OR-1000 Product Sheet
PolyProcessing Polyethylene Tank Life Expectancy
PolyProcessing Chemical Compatibility Data including Temperature Dependence
PolyProcessing Technical Bulletin, Crosslinked Polyethylene with OR-1000™ System, Dated June 2005, Rev. A

NON-CONTROLLED COPY

INFORMATION SUBJECT TO CHANGE WITHOUT NOTICE

VERIFY REV LEVEL OF PAPER COPY WITH REV LEVEL ON PPC WEB SITE

Proposed Storage Tank

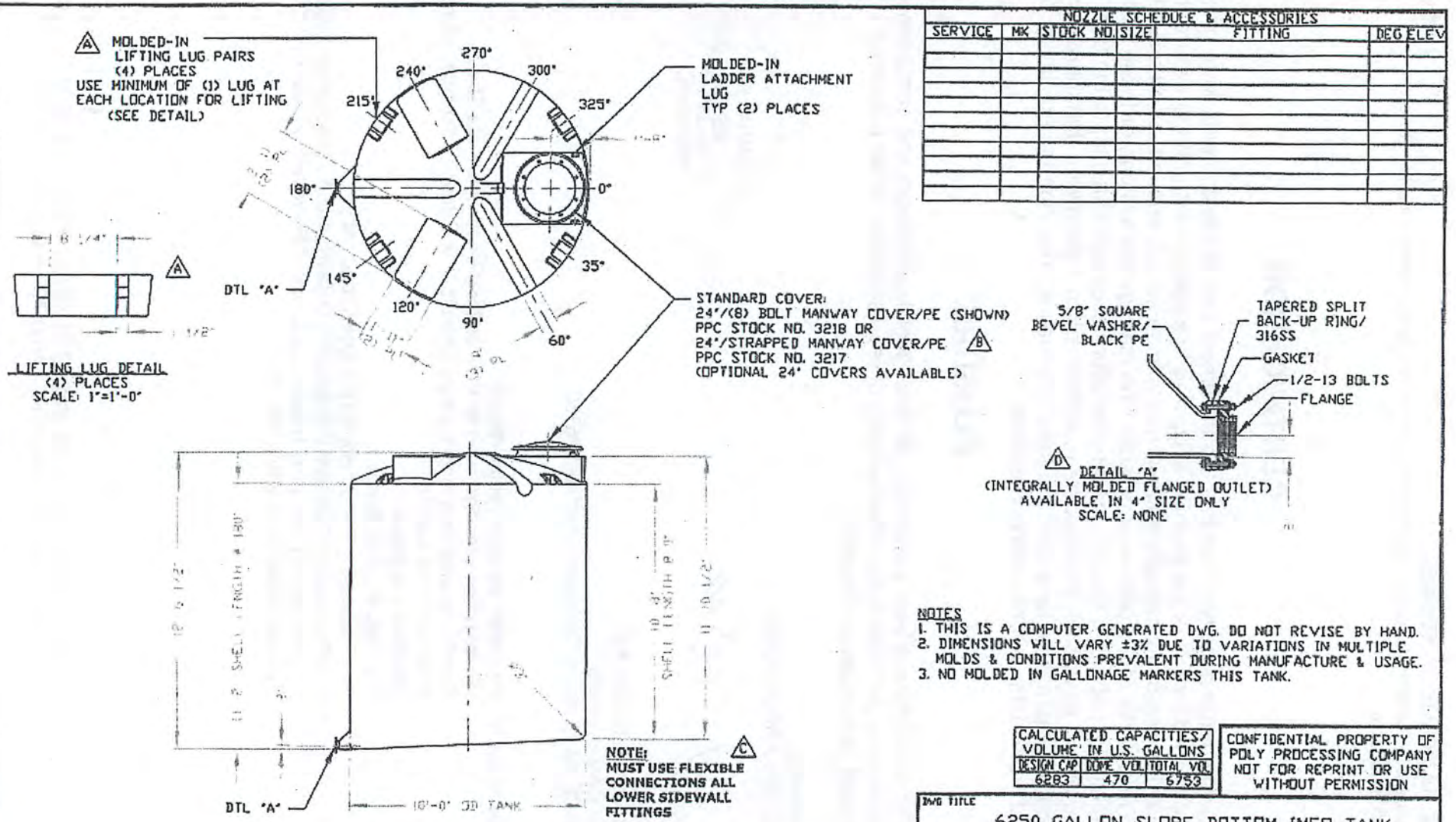

NOZZLE SCHEDULE & ACCESSORIES						
SERVICE	MK	STOCK NO.	SIZE	FITTING	DEG	ELEV

NOTES

1. THIS IS A COMPUTER GENERATED DWG. DO NOT REVISE BY HAND.
2. DIMENSIONS WILL VARY ±3% DUE TO VARIATIONS IN MULTIPLE MOLDS & CONDITIONS PREVALENT DURING MANUFACTURE & USAGE.
3. NO MOLDED IN GALLONAGE MARKERS THIS TANK.

CALCULATED CAPACITIES/ VOLUME IN U.S. GALLONS		
DESIGN CAP	DOME VOL	TOTAL VOL
6283	470	6753

CONFIDENTIAL PROPERTY OF POLY PROCESSING COMPANY NOT FOR REPRINT OR USE WITHOUT PERMISSION

DWG TITLE: 6250 GALLON SLOPE BOTTOM IMFO TANK

SCALE: 1/4"=1'-0"

DATE: 3/17/00

POLYPROCESSING COMPANY
Western Region
P.O. Box 00
2000 South Ash Street
Fayette Corp, CA 92831
(000) 000-0000
FAX (000) 000-0000

DR: MB WILKERSON

CK: D. RECTOR

SHEET: 1 OF 1

COMPUTER FILE: 11206

REV: E

REV "E" REVISED FOR MOLD MODIFICATIONS BY:JB 6/16/053 CK:WM
REV "D" REVISED IMFO STYLE BY:JB 4/30/03 CK:WM
REV "C" ADDED FITTING NOTE BY:JB 3/3/02 CK:MBW
REV "B" REVISED STOCK NUMBER BY:JB 3/3/02 CK:MBW
REV "A" ADDED LIFTING LUGS & DETAIL BY:JB 10/31/02

Table I

The following chemicals do not attach or permeate high density crosslinkable polyethylene resins up to 100° F. Each application should be considered individually. All concentrations apply except where noted.

Acetic Acid <1%
Aluminum Salts
Alum
Ammonium Hydroxide
Ammonium Salts
Amyl Alcohol
Antimony Salts
Arsenic Acid
Barium Hydroxide
Benzene Sulfonic Acid <1%
Bismuth Salts
Boric Acid <10%
Bromic Acid <10%
Butanediol
Butyl Alcohol
Calcium Hydroxide
Calcium Salts
Chromic Acid<50%
Citric Acid <1%
Copper Salts
Detergents
Diazo Salts
Diethyl Carbonate
Diethanol Amine
Diethylene Glycol
Diglycolic Acid
Dimethylamine
Dimethyl Formamide
Ethyl Alcohol
Ethylene Glycol
Ferric Salts
Ferrous Salts
Fluoboric Acid <5%
Fluosilicic Acid
Formic Acid <1%
Gallic Acid
Gluconic Acid
Hexanol
Hydrazone<35%
Hydrozine Hydrochloride
Hydriodic Acid
Hydrobromic Acid
Hydrochloric Acid
Hydrofluoric Acid <5%
Hydrofluorosilicic Acid <5%
Hydrogen Peroxide<52%
Hydrogen Phosphide
Hydroquinone
Hypochorous Acid
Iodine Solutions
Lactic Acid
Latex
Lead Acetate
Magnesium Salts
Mercuric Salts
Mercurous Salts
Mercury
Methyl Alcohol
Methylsulfuric Acid
Michel Salts
Nicotinic Acid
Nitric Acid<50%
Oxalic Acid <1%
Perchloric Acid <1%
Phenol<10%
Potassium Hydroxide
Potassium Salts
Phosphoric Acid
Photographic Solutions
Propyl Alcohol
Propylene Glycol
Sea Water
Selenic Acid <1%
Sewage
Silicic Acid
Silver Salts
Soap Solutions
Sodium Ferricyanide
Sodium Ferrocyanide
Sodium Hydroxide
[1]Sodium Hypochlorite<9%
Sodium Salts
Sodium Sulfonates
Stanic Salts
Stannous Salts
Starch Solutions
Stearic Acid
[1]Sulfuric Acid <80%
Sulfurous Acid
Sugar Solution
Glucose
Lactose
Sucrose, etc.
Tannic Acid
Tanning Extracts
Tartaric Acid
Titinium Acid
Toluene Sulfonic Acid
Triethanolamine
Urea
Vinegar
Wetting Agents
Zinc Salts

[1]Concentrations above stated percentage require special considerations, contact factory for guidelines concerning these applications.

Table II

The following oils and organic chemicals do not attack HDXLPE resins. They will be absorbed into the wall of the tank; however, there should be no loss of chemical. Because of this absorption, no chemical other than the original should be stored in the tank as long as contamination may result as the absorbed oil is leached out. Storage at temperatures up to 100° F are possible provided the effects of the absorption on the properties of the tank are not prohibitive.

Fatty Acids	Mineral Oils	Animal Fats	Vegetable Oil
Butyric	Lube	Lard	Corn
Lauric	Transformer	Fish Oil	Coconut
Linoleic	Hydraulic	Musk Oil	Cottonseed
Oleic		Whale Oil	Olive
Palmitic			Peanut
Stearic			

Table III

The following organic chemicals do not attack high density crosslinkable polyethylene resins. They will be absorbed into the wall of tank and a permeation loss will occur. Because of this permeation and the effect it has on the physical properties of the tank, it is generally not recommended that these chemicals be storage at room temperatures above 100° F. However, their use largely depends on such factors as size of tank, its location, toxicity of the chemical, and applicable codes such as NFPA, OSHA, etc.

Aniline
Benzene
Carbon Tetrachloride
Chlorabenzene
Cychohexanol
Cycolchexnone
Dibutyiphthalate
Diesel Fuel
Dimethylamine
Ethyl Butyrate
Ethylene Chlorohydin
Fuel Oil
Futural
Aliphatic Hydrocarbons (hexane, octane, hexene, octene, etc.)
Jet Fuel
Gasoline
Nitrobenzene
Octyl Cresol
Propylene Dichloride
Toluene
Xylene

This document reports accurate and reliable information to the best of our knowledge, but our suggestions and recommendations cannot be guaranteed because the conditions of use are beyond our control. Information presented herein is given without reference to any patent questions which may be encountered in use thereof. Such questions should be investigated by those using this information. Poly Processing Company assumes no responsibility for the use of information presented herein and hereby disclaims all liability in regard to such use.

POLYPROCESSING COMPANY
Providing Solutions Through Innovation

Chemical Resistance

Chemical Resistance

Chemical "resistance" and "compatibility" are synonymous terms used in relation to the ability of a plastic to function in different environments. In regards to polyethylene chemical storage tanks, chemical resistance encompasses the total effect a product would have on a tank. The factors that make up the overall compatibility of a chemical to a rotomolded tank are (1) chemical attack, (2) absorption or permeation, and (3) solubility and stress crack resistance.

Chemical Attack

By definition, chemical attack involves an actual chemical reaction with the plastic. This can be a breaking of molecular chains and/or an addition of chemical groups to the molecule. For example, in the case of an oxidation reaction with polyethylene, both occur with the addition of carbonyl groups. This causes and eventual loss of properties to the point that a tank would not be serviceable.

Polyethylene in general is one of the most inert plastics available. Very few chemicals react with polyethylene and with those that do, the rate is relatively slow. The ultra high molecular weight characteristics of high density crosslinked polyethylene resins after crosslinking makes these particular polyethylenes even more resistant than other grades.

Permeation

This involves the physical absorption of the chemical into the polyethylene. If this is a volatile chemical, then an actual loss of the product can occur as the chemical vaporizes from the outer wall of the tank. The amount of absorption is generally limited to 3 to 7 percent by weight of the polyethylene. Also, the loss of volatile products is relatively small. For example, a 25-gallon tank with a 50-mil wall will only lose between 5 and 6 grams of gasoline per day due to permeation. The thicker the wall, the lower the rate of loss.

The absorption of a product into the wall of a tank will cause more property changes. The tensile strength is reduced approximately 15 to 20 percent and stiffness approximately 20 percent. Normally, this does not affect the utility of a tank or prohibit the application. The property losses due to permeation are offset by increasing the design wall thickness of the tank.

Elevated Temperature

The effects of elevated temperature (100° F or greater) on polyethylene tank are predictable and expected. Polyethylene, which is a flexible material, becomes even more flexible when heated. It will, therefore, bulge more at an elevated temperature than at room temperature.

By looking at the design hoop stress values for various temperatures, one can see the effects of increased temperature services. The values remain relatively constant up to 100° F, after which they begin to decrease.

100° F	600 psi	130° F	450 psi
110° F	550 psi	140° F	400 psi
120° F	500 psi	150° F	300 psi

A rise in temperature of 50° F (100° F to 150° F) reduces the design hoop stress value from 600 psi to 300 psi and doubles the required wall thickness. It follows that simply increasing the service rating of a tank from 1.35 S.G. to 1.65 S.G., or even to 1.90 S.G. is not necessarily sufficient. The proper wall thickness must be calculated for the temperature of service.

The maximum temperature rating for crosslinked polyethylene material is 150° F. Above that temperature the thermal stabilizers in the plastic are more rapidly consumed. Continued use will cause embrittlement and a reduction in the useful life of the part. Temperature services from 100° F to 150° F are acceptable applications, however, thicker tank walls are required to maintain a safe design. Consult the factory when application such as these arise.

Authorized Distributor:

Toll-Free 1-866-590-6845
www.polyprocessing.com

Table I

The following chemicals do not attach or permeate high density crosslinkable polyethylene resins up to 100° F. Each application should be considered individually. All concentrations apply except where noted.

Acetic Acid
Aluminum Salts
Alum
Ammonium Hydroxide
Ammonium Salts
Amyl Alcohol
Antimony Salts
Arsenic Acid
Barium Hydroxide
Benzene Sulfonic Acid
Bismuth Salts
Boric Acid
Bromic Acid
Butanediol
Butyl Alcohol
Calcium Hydroxide
Calcium Salts
Chromic Acid<50%
Citric Acid
Copper Salts
Detergents
Diazo Salts
Diethyl Carbonate
Diethanol Amine
Diethylene Glycol
Diglycolic Acid
Dimethylamine
Dimethyl Formamide
Ethyl Alcohol
Ethylene Glycol
Ferric Salts
Ferrous Salts
Fluoboric Acid
Fluosilicic Acid
Formic Acid
Gallic Acid
Gluconic Acid
Hexanol
Hydrazone<35%
Hydrozine Hydrochloride
Hydriodic Acid
Hydrobromic Acid
Hydrochloric Acid
Hydrofluoric Acid
Hydrofluorosilicic Acid
Hydrogen Peroxide<52%
Hydrogen Phosphide
Hydroquinone
Hypochorous Acid
Iodine Solutions
Lactic Acid
Latex
Lead Acetate
Magnesium Salts
Mercuric Salts
Mercurous Salts
Mercury
Methyl Alcohol
Methylsulfuric Acid
Michel Salts
Nicotinic Acid
Nitric Acid<50%
Oxalic Acid
Perchloric Acid
Phenol<10%
Potassium Hydroxide
Potassium Salts
Phosphoric Acid
Photographic Solutions
Propyl Alcohol
Propylene Glycol
Sea Water
Selenic Acid
Sewage
Silicic Acid
Silver Salts
Soap Solutions
Sodium Ferricyanide
Sodium Ferrocyanide
Sodium Hydroxide
[1]Sodium Hypochlorite<9%
Sodium Salts
Sodium Sulfonates
Stanic Salts
Stannous Salts
Starch Solutions
Stearic Acid
[1]Sulfuric Acid <80%
Sulfurous Acid
Sugar Solution
Glucose
Lactose
Sucrose, etc.
Tannic Acid
Tanning Extracts
Tartaric Acid
Titinium Acid
Toluene Sulfonic Acid
Triethanolamine
Urea
Vinegar
Wetting Agents
Zinc Salts

[1]Concentrations above stated percentage require special considerations, contact factory for guidelines concerning these applications.

Table II

The following oils and organic chemicals do not attack HDXLPE resins. They will be absorbed into the wall of the tank; however, there should be no loss of chemical. Because of this absorption, no chemical other than the original should be stored in the tank as long as contamination may result as the absorbed oil is leached out. Storage at temperatures up to 100° F are possible provided the effects of the absorption on the properties of the tank are not prohibitive.

Fatty Acids	**Mineral Oils**	**Animal Fats**	**Vegetable Oil**
Butyric	Lube	Lard	Corn
Lauric	Transformer	Fish Oil	Coconut
Linoleic	Hydraulic	Musk Oil	Cottonseed
Oleic		Whale Oil	Olive
Palmitic			Peanut
Stearic			

Table III

The following organic chemicals do not attack high density crosslinkable polyethylene resins. They will be absorbed into the wall of tank and a permeation loss will occur. Because of this permeation and the effect it has on the physical properties of the tank, it is generally not recommended that these chemicals be storage at room temperatures above 100° F. However, their use largely depends on such factors as size of tank, its location, toxicity of the chemical, and applicable codes such as NFPA, OSHA, etc.

Anitine
Benzene
Carbon Tetrachloride
Chlorabenzene
Cychohexanol
Cycolohexnone
Dibutylphthalate
Diesel Fuel
Dimethylamine
Ethyl Butyrate
Ethylene Chlorohydin
Fuel Oil
Fufural
Aliphatic Hydrocarbons (hexane, octane, hexene, octene, etc.)
Jet Fuel
Gasoline
Nitrobenzene
Octyl Cresol
Propylene Dichloride
Toluene
Xylene

This document reports accurate and reliable information to the best of our knowledge, but our suggestions and recommendations cannot be guaranteed because the conditions of use are beyond our control. Information presented herein is given without reference to any patent questions which may be encountered in use thereof. Such questions should be investigated by those using this information. Poly Processing Company assumes no responsibility for the use of information presented herein and hereby disclaims all liability in regard to such use.

OR-1000™ Tank Systems!

Specify Peace of Mind!

NSF/ANSI 61

- **OR-1000™ Engineered System**
- **4 Times Antioxidants**
- **Certified for 31+ Hazardous and Corrosive Chemical Applications**
- **Design Temperatures to 140°F**
- **Complies with State Regulations**

Provide Longer Tank Life with an IMFO®/OR-1000™ System!

Increase Tank Longevity!

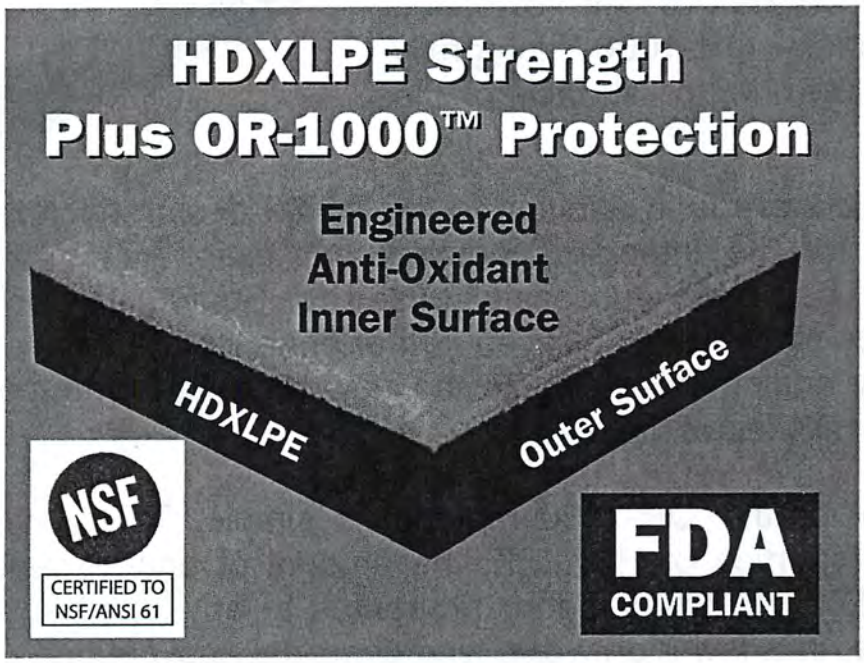

page
27

- Proven System since 1995
- Increased Chemical Resistance
- Complete Drain
- Maintenance Free
- Avoids Confined-Space Entry
- 4x Anti-Oxidant Package
- Sodium Hypochlorite/Sulfuric Acid/ Hydrochloric Acid applications*

*See warranty information on page 26

POLY PROCESSING COMPANY
Providing Solutions Through Innovation

Storage Solution: OR-1000 Liner

Poly Processing Company is the only rotational molding company with the ability to provide the strength, durability and safety of HDXLPE with the added value of an oxidation resistant liner, OR-1000, integrally molded as the interior surface of the part.

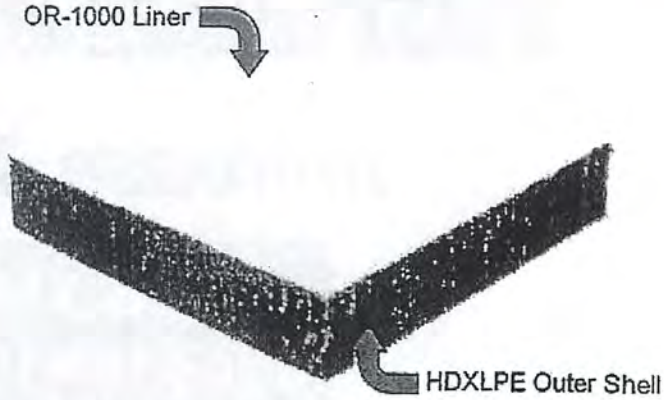

The liner thickness is in addition to the ASTM design thickness of the HDXLPE outer shell for the intended chemical application. This crosslink / OR-1000 combination has been successfully used for Sodium Hypochlorite and Sulfuric Acid services since 1995. To even further enhance the value of this combination, we are now adding this lining to the new high performance Metallocene High Density Crosslinked resin.

The reason for the OR-1000 material is simple. To develop the outstanding long-term properties of HDXLPE, the amount of anti-oxidants must be limited. Although HDXLPE has superior properties to any other rotational mold grade polyethylene, in a few highly oxidizing chemical applications, its optimum service life has not been obtained. To capitalize on the superior properties and performance characteristics of HDXLPE, the OR-1000 liner was developed to serve as an oxidation barrier to improve service life in oxidizing chemical applications. This combination provides unmatched performance and value to our customers.

Sodium Hypochlorite and Sulfuric Acid remain very difficult storage and handling applications. However, we continue to bring you the very best in value, service and high performance products -- Poly Processing Company, *providing solutions through innovation.*

CERTIFIED ISO 9001

member

THE CHLORINE INSTITUTE, INC.
member

Authorized Distributor:

1-866-590-6845
www.polyprocessing.com

Rev. 3/2001

POLYPROCESSING COMPANY

Providing Solutions Through Innovation

Polyethylene Tank Life Expectancy

For 35 years, Poly Processing Company has been **Helping Our Customers . . . Solve Problems** associated with storing hazardous chemicals, **Managing Risk** with the Environment and Employee Safety and **Growing Their Profits** with Increased Tank Longevity and Operating Efficiencies. We have specialized in providing hazardous chemical storage solutions to the industrial, water and waste water markets. While we manufacture both linear and crosslink polyethylene storage tanks; in **hazardous chemical environments, crosslink polyethylene** is the material of choice. Our customers report crosslink polyethylene tanks providing service for 10+ years with 15 to 20 years of tank service being common. However; there are many factors and variables that have an effect on the useful life of any tank including polyethylene.

Chemical, Concentration and Temperature: The chemical, concentration and operating temperature are all factors influencing the life expectancy of a polyethylene tank. For example, high concentrations of Sulfuric Acid are stress cracking agents and are more aggressive oxidizers than less concentrated chemicals such as 25% Caustic Soda. For this reason, Poly Processing offers our customers the OR-1000™ Anti-Oxidant Systems. Another example: 12% Sodium Hypochlorite will degrade from UV exposure and elevated temperatures. As it degrades, sediment builds in the bottom of the tank leading to a shorter tank life. To eliminate this sludge buildup, Poly Processing Company offers our customers the IMFO® (Integrally Molded Flanged Outlet). The IMFO® design promotes continuous "system" flushing increasing tank life and operating efficiencies. Poly Processing Company chemical storage tanks are constructed from premium materials and designed specifically for the chemical, concentration and temperature requirements.

Installation and Piping: The single biggest reason for tank life reduction is improper tank installation and **"hard"** piping. Polyethylene's broad spectrum of chemical resistance vs. other materials of construction is based on its ability to expand and contract. Flexible connections compensate for tank expansion and contraction promoting a longer useful life. It is important to follow Poly Processing Company's Installation Manual Instructions during the installation process.

Venting: Often overlooked, venting is a very important step that promotes tank longevity. Polyethylene tanks are rated at atmospheric pressure/vacuum. Adequate vent size is always based on flow and delivery rates so it is important to gather the following information to adequately determine the proper venting requirements:

1) Is the tank to be filled pneumatically?
2) Is the tank to be vented to atmosphere?
3) Does the length of the vent exceed 3 feet (piped to a central vent system)
4) Is a fume scrubbing system to be used?
5) Are vent screens to be used (restricts flow)?
6) Does the tank manufacturer offer a method of "emergency venting" to prevent over-pressurization?

Other Items Effecting Tank Longevity:

1) Continuous cycling (fill / discharge)
2) Excessive agitation
3) Mobile applications

For further information about your specific needs or applications, please contact Poly Processing Company at 1-866-590-6845 or visit our website at www.polyprocessing.com.

POLYPROCESSING COMPANY
Providing Solutions Through Innovation

Chemical Resistance

Chemical Resistance

Chemical "resistance" and "compatibility" are synonymous terms used in relation to the ability of a plastic to function in different environments. In regards to polyethylene chemical storage tanks, chemical resistance encompasses the total effect a product would have on a tank. The factors that make up the overall compatibility of a chemical to a rotomolded tank are (1) chemical attack, (2) absorption or permeation, and (3) solubility and stress crack resistance.

Chemical Attack

By definition, chemical attack involves an actual chemical reaction with the plastic. This can be a breaking of molecular chains and/or an addition of chemical groups to the molecule. For example, in the case of an oxidation reaction with polyethylene, both occur with the addition of carbonyl groups. This causes and eventual loss of properties to the point that a tank would not be serviceable.

Polyethylene in general is one of the most inert plastics available. Very few chemicals react with polyethylene and with those that do, the rate is relatively slow. The ultra high molecular weight characteristics of high density crosslinked polyethylene resins after crosslinking makes these particular polyethylenes even more resistant than other grades.

Permeation

This involves the physical absorption of the chemical into the polyethylene. If this is a volatile chemical, then an actual loss of the product can occur as the chemical vaporizes from the outer wall of the tank. The amount of absorption is generally limited to 3 to 7 percent by weight of the polyethylene. Also, the loss of volatile products is relatively small. For example, a 25-gallon tank with a 50-mil wall will only lose between 5 and 6 grams of gasoline per day due to permeation. The thicker the wall, the lower the rate of loss.

The absorption of a product into the wall of a tank will cause more property changes. The tensile strength is reduced approximately 15 to 20 percent and stiffness approximately 20 percent. Normally, this does not affect the utility of a tank or prohibit the application. The property losses due to permeation are offset by increasing the design wall thickness of the tank.

Elevated Temperature

The effects of elevated temperature (100° F or greater) on polyethylene tank are predictable and expected. Polyethylene, which is a flexible material, becomes even more flexible when heated. It will, therefore, bulge more at an elevated temperature than at room temperature.

By looking at the design hoop stress values for various temperatures, one can see the effects of increased temperature services. The values remain relatively constant up to 100° F, after which they begin to decrease.

100° F	600 psi	130° F	450 psi
110° F	550 psi	140° F	400 psi
120° F	500 psi	150° F	300 psi

A rise in temperature of 50° F (100° F to 150° F) reduces the design hoop stress value from 600 psi to 300 psi and doubles the required wall thickness. It follows that simply increasing the service rating of a tank from 1.35 S.G. to 1.65 S.G., or even to 1.90 S.G. is not necessarily sufficient. The proper wall thickness must be calculated for the temperature of service.

The maximum temperature rating for crosslinked polyethylene material is 150° F. Above that temperature the thermal stabilizers in the plastic are more rapidly consumed. Continued use will cause embrittlement and a reduction in the useful life of the part. Temperature services from 100° F to 150° F are acceptable applications, however, thicker tank walls are required to maintain a safe design. Consult the factory when application such as these arise.

Crosslinked Polyethylene with OR-1000™ System
The #1 System for Oxidizing Chemical Environments

Poly Processing Company and other polyethylene tank manufacturers, as well as major polyethylene resin manufacturers have published many documents over the past several years discussing the benefits of certain rotational molding resins in acidic and alkaline chemical environments. The majority of these documents support the use of crosslinked polyethylene over linear polyethylene in acidic and basic chemical environments. These articles speak to the longevity of crosslinked polyethylene rotationally molded tanks, the safety of having polymer chains that are chemically bonded, and the leveraged investment of knowing that crosslinked polyethylene chemical storage tanks have been utilized for the last 35 years.

In 2001, one of the largest resin manufacturers in North America published a fairly extensive study which showed that their linear polyethylene in a lab environment performed as well as, if not better than crosslinked polyethylene, in acidic and alkaline chemical applications. This study, coupled with marketing efforts by linear polyethylene tank manufacturers who do not rotationally mold crosslinked polyethylene tanks in the course of their normal business, has given rise to some industry confusion and misunderstanding about what is the best resin system for storing oxidizing chemicals. We will summarize the facts about rotationally molded polyethylene storage tanks and the value of an engineered antioxidant resin system coupled with the long-term performance of crosslinked polyethylene.

We would first like to discuss the lab study performed by the linear resin manufacturer. The study compared crosslinked polyethylene with linear polyethylene in sulphuric acid and sodium hypochlorite environments. The sulphuric acid was concentrated approximately 93%-97%, and the Sodium Hypochlorite was around 14% concentration. The lab study describes how the crosslinked polyethylene and linear polyethylene were submersed in the chemicals and then tested using ARM Impact testing as well as Environmental Stress Crack Resistivity (ESCR) testing. The study concluded that the linear materials in a chemical resistivity mode held up as well as crosslinked materials in a lab environment. In addition, Higher ESCR properties are found in lower density materials like LLDPE or LDPE as compared to HDPE resins. It doesn't mean you want to use a tank made only from the lower density resins. ESCR shows how well the material performs in a pre-notched condition in the presence of certain chemicals.

The lab study performed by the resin manufacturer did not cover or discuss the long-term properties of these materials in harsh, environmental conditions. Over time, sodium hypochlorite and sulphuric acid create an oxidative environment, which remove hydrogen molecules from the polymer chains creating embrittlement. This phenomenon is inherent to all types of polyethylene, since they are hydrocarbon based molecules. Storing acids and bases in actual everyday environments presents a completely different set of parameters and stresses that have little to do with the lab environment.

Poly Processing Company has been aware of this relationship between ESCR and Chemical resistance for many years and has been an industry leader in creating engineered resin systems which give the end user the ability to have excellent oxidation and chemical resistivity without sacrificing long term performance and toughness. These engineered resin systems deliver peace of mind, a margin of safety, and leveraged investment to the end user.

Another critical factor to consider when storing acids and bases in actual everyday environments is the Long Term Hydrostatic Strength (LTHS) of the polyethylene. LTHS properties are one of the keys to providing the continued strength necessary for tanks during its service life. This property is especially important in field applications where tanks can see elevated temperatures approaching

140°F. LTHS tests are conducted at both ambient temperature (73°F) and at elevated temperature (140°F) since actual field conditions are typically in this range.
Figure 1.

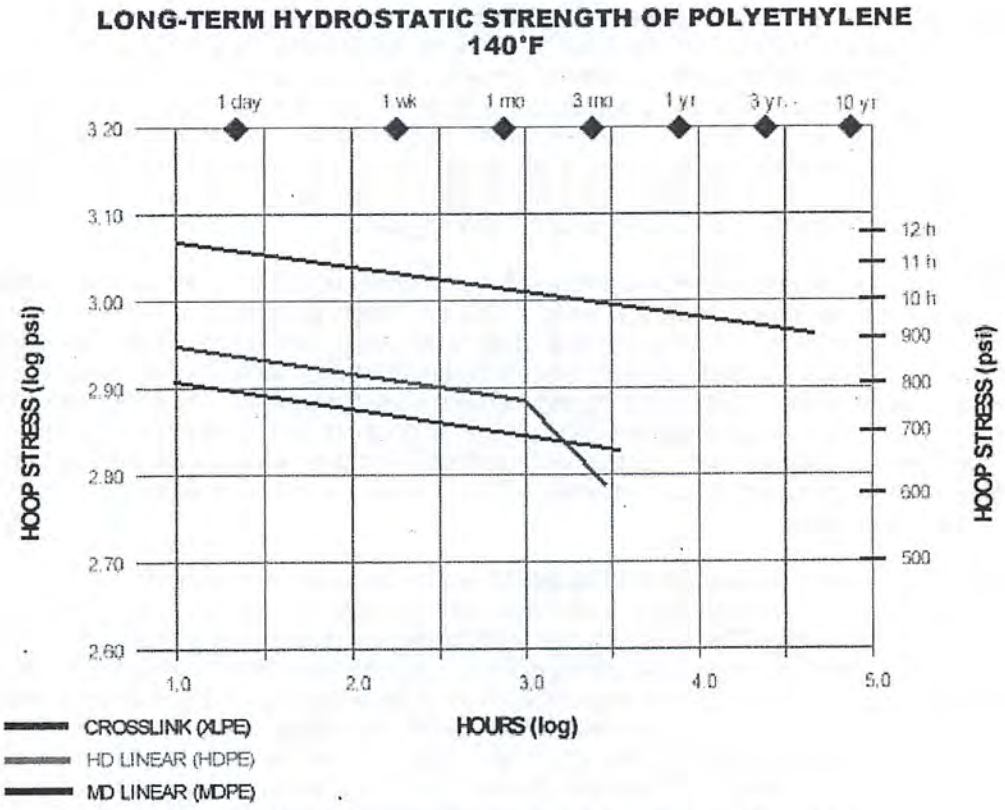

Source: Chevron Phillips Company, Plastics Technical Center

The rapid deterioration in properties is indicated by a "knee" in the curve of hoop strength versus time as illustrated in Figure 1 above. Even high performance HDPE will develop a LTHS knee at around 1000 hours (log 3), and some MDPE products will have a knee in less than 10,000 hours (log 5). This type of performance substantially reduces the expected long-term performance at elevated temperatures. Crosslinked polyethylene has been tested to 50,000 hours at 140°F and shows no signs of a knee.

There is still the need to surround the oxidation resistant material with a robust resin system that will give you longer useful tank life, superior impact resistance, and greater tensile strength for a safer product. That is why crosslinked polyethylene is still the material of choice for industrial and municipal chemical applications.

Poly Processing Company has been the leader in rotationally molded crosslinked polyethylene storage tanks for 35 years. We work with the leading universities in the country to develop engineered resin systems that will perform above and beyond any standard "off the shelf" polyethylene in harsh, oxidizing environments. One of the systems we developed is the OR-1000™ system. This system uses the best linear resin for chemical resistivity combined with four (4) times the antioxidant power and a crosslink outer wall for maximum long-term performance and durability.

Poly Processing Company developed the OR-1000™ oxidation resistance system in 1995. This lower density linear material serves to increase the service life of crosslinked polyethylene tanks in oxidizing chemical service (Sodium Hypochlorite, Sulphuric Acid, Hydrochloric Acid, and Nitric Acid). To develop the outstanding long-term physical properties of crosslinked polyethylene, the amount of antioxidant compounded into the material has to be limited. Although crosslinked polyethylene has superior properties to any other rotational molding grade polyethylene, the tank's useful service life will be reduced without the OR-1000™ system. In order to utilize the superior properties of crosslinked polyethylene, the OR-1000™ system was developed to greatly improve the service life in harsh oxidizing chemical environments. This material is a medium density linear based resin with a large amount of antioxidant added to it for the best oxidizing resistance system in the industry. The OR-1000™ system has been engineered to prevent de-lamination during the useful life of the tank.

To compare the effect of oxidizing chemicals on the OR-1000™ system and crosslinked polyethylene, 1/8" thick tensile bars of both OR-1000™ and crosslinked polyethylene were submerged in a manufacturer's storage tank. This tank handled a highly oxidizing chemical, 17% Sodium Hypochlorite, and was emptied and filled at least once a day. Every 30 days, samples were pulled and tensile and percent elongation was determined as well as ESCR tests. Oxidization or reduction in physical properties is indicated by reduced in elongation. After six months of testing, the elongation of the crosslinked polyethylene tensile bars had decreased 26% while OR-1000™ elongation had no change. This is due to the added antioxidant in the OR-1000™ system as well as the fact that the linear material used in the testing was a lower density material than the crosslinked material.

Crosslinked polyethylene provides superior environmental stress cracking resistance (ESCR) or sometimes generally referred to as resistance to slow crack growth (SCG) in almost all chemical applications. Two tests which clearly show this difference are the bent strip ESCR (ASTM D1693) with 10% Igepal where crosslink polyethylene does not fail in over 1000 hours compared to typical values for LMDPE of <400 hours. Another test which shows the slow crack growth difference with no surfactant (in air) is the polyethylene notch test (PENT) described in ASTM F 1473 and crosslink polyethylene again does not fail in over 1000 hours and LMDPE grades fail in <100 hours. Even though linear polyethylene grades with improved ESCR have become available over the past 10 to 15 years, they still do not match crosslinked polyethylene in SCG performance. Slow crack growth resistance as was shown earlier in this paper is an important property that can affect the long-term performance of tanks.

The best of both worlds is having the OR-1000™ system for the long-term oxidative resistivity characteristics (as discussed in the resin manufacturer's lab study), with the robustness of crosslinked polyethylene for the long-term durability and long useful life that is expected of industrial grade chemical storage tanks. This is why so many chemical manufacturers and distributors choose Poly Processing Company for engineered chemical storage solutions.

Crosslinked polyethylene tanks with the OR-1000™ system varying in sizes from 500 gallons to 14,950 gallons have been in true industrial and municipal use for over 10 years with excellent results. Poly Processing Company backs every crosslinked polyethylene tank with the OR-1000™ system with a 5 year full warranty on all suitable applications including sodium hypochlorite and hydrochloric acid, sulfuric acid 80%-98% carries a full 3 year warranty

Store your harsh oxidizing chemicals with the confidence and peace of mind that you deserve. Specify Poly Processing Company's crosslinked polyethylene tanks with the OR-1000™ system for longevity, safety, and leveraged investment. Please consult your distributor or Poly Processing Company at 1-866-590-6845 for your specific requirements.

tobeywade
STRUCTURAL ENGINEERS

May 6, 2010
Project No. R115-07-08

Mr. Aubry Burgess, Maintenance Supervisor
PHILIP SERVICES CORPORATION
ENVIRONMENTAL SERVICES DIVISION
2095 Newlands Drive East
Fernley, NV 89408

RE: TANK 204 CERTIFICATION REPORT

Dear Mr. Burgess:

In accordance with the Fernley Facility Amended Tank Replacement plan as prepared by Philip Services Corporation (PSC) and dated March 25, 2008, each tank is required to be certified by Independent Registered Professional Engineers (IRPE's) prior to being placed into service. This report has been prepared to document the evaluations as performed by Tobey-Wade Consulting.

Background

Tank 204 is a Crosslinked Polyethethylene Tank with a 6,250 gallon capacity as manufactured by Poly Processing Company. Poly Processing has provided data relative to the tank's strength and its chemical resistance capabilities. Poly Processing has also provided an opinion as to any offsets observed in the tank shell.

Schiff Associates has evaluated the tank's suitability and compatibility for its proposed use in PSC's facility. Their conclusions have been provided under separate cover to PSC.

Findings

Based on our research, analysis and structural observations, the following systems are in compliance with the Amended Tank Replacement plan:

- Tank 204 is situated on a reinforced concrete foundation system which is capable of adequately supporting the tank and its contents under static and dynamic conditions.
- Tank 204 is located in an area with sufficient secondary containment as required by 40 CFR Ch. I, 264.193.
- Tank 204 is stabile against overturning when subjected to loads based on 2006 International Building Code level seismic events.

- Tank 204 is anchored to prevent sliding when subjected to loads based on 2006 International Building Code (IBC) level seismic events. Structural Observation and Special Inspection of the anchorage system has been performed as required by the IBC. The Structural Observation and Special Inspection reports are attached.

- Tank 204 has been tested for leakage and found to be watertight. The Tank Leakage Test report is attached.

- The exterior of Tank 204's shell wall has been inspected and found to be generally undamaged. The Tank Shell Inspection report is attached.

Structural Observation, tank leakage inspections and tank shell inspections were performed by Tobey-Wade Consulting under my direct supervision. Special Inspections were performed by ICC-certified inspectors from Black Eagle Consulting based on anchorage requirements provided by Tobey-Wade Consulting.

Certification Statement

I certify under penalty of law that this report and all attachments were prepared under my direction and supervision in accordance with a system developed to assure that qualified personnel properly gather and evaluate the information submitted. Based on my inquiry of the person or persons who manage the system or those persons directly responsible for gathering the information, the information, submitted is, to the best of my knowledge and belief, true, accurate, and complete. I am aware that there are significant penalties for submitting false information, including the possibility of fines and imprisonment for knowing violations.

This report has been prepared in accordance with acceptable engineering practices and is subject to the assumptions and limitations stated in the report. Also note that this certification covers the aforementioned aspects of Tank 204 only.

Please feel free to contact me at your convenience should you have any questions relating to our findings.

Sincerely,
TOBEY-WADE CONSULTING

Terrence R. Tobey

Terrence R. Tobey, S.E.
Principal Structural Engineer

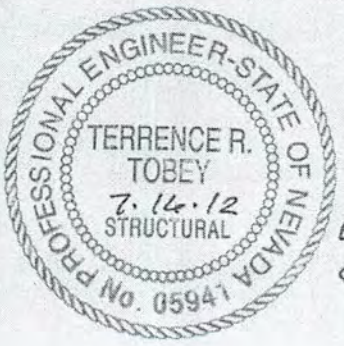

Exp.
6.30.14

NON-CONTROLLED COPY
INFORMATION SUBJECT TO CHANGE WITHOUT NOTICE
VERIFY REV LEVEL OF PAPER COPY WITH REV LEVEL ON PPC WEB SITE

Proposed Storage Tank

A MOLDED-IN LIFTING LUG PAIRS (4) PLACES
USE MINIMUM OF (1) LUG AT EACH LOCATION FOR LIFTING (SEE DETAIL)

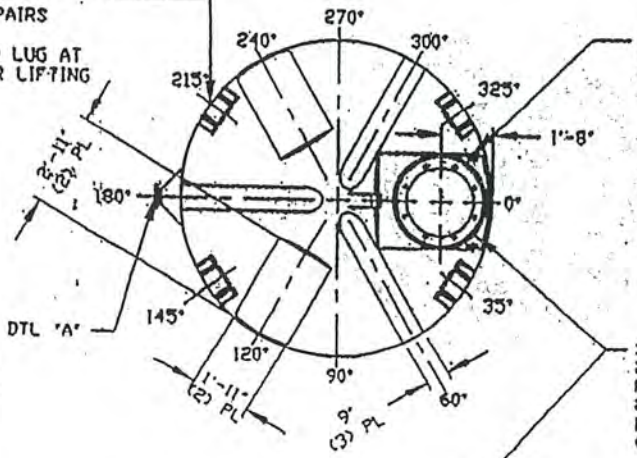

MOLDED-IN LADDER ATTACHMENT LUG TYP (2) PLACES

NOZZLE SCHEDULE & ACCESSORIES

SERVICE	MK	STOCK NO.	SIZE	FITTING	DEG	ELEV

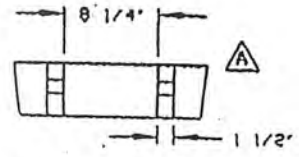

LIFTING LUG DETAIL
(4) PLACES
SCALE: 1"=1'-0"

STANDARD COVER:
24"/(8) BOLT MANWAY COVER/PE (SHOWN)
PPC STOCK NO. 3218 OR
24"/STRAPPED MANWAY COVER/PE
PPC STOCK NO. 3217
(OPTIONAL 24" COVERS AVAILABLE)

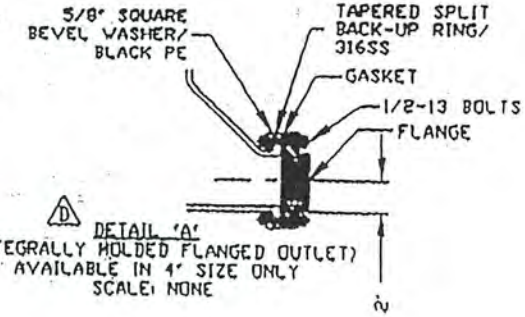

D DETAIL 'A'
(INTEGRALLY MOLDED FLANGED OUTLET)
AVAILABLE IN 4" SIZE ONLY
SCALE: NONE

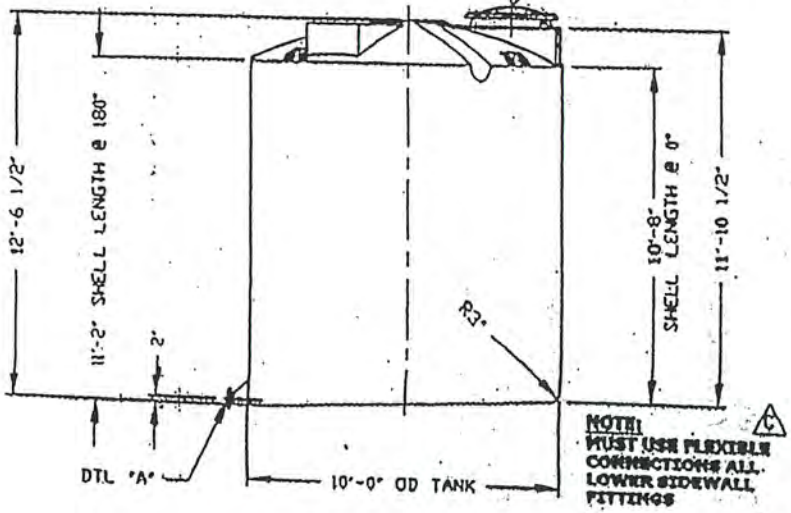

C NOTE: MUST USE FLEXIBLE CONNECTIONS ALL LOWER SIDEWALL FITTINGS

NOTES
1. THIS IS A COMPUTER GENERATED .DWG. DO NOT REVISE BY HAND.
2. DIMENSIONS WILL VARY ±3% DUE TO VARIATIONS IN MULTIPLE MOLDS & CONDITIONS PREVALENT DURING MANUFACTURE & USAGE.
3. NO MOLDED IN GALLONAGE MARKERS THIS TANK.

CALCULATED CAPACITIES/ VOLUME IN U.S. GALLONS		
KNUCKLE CAP	DOME VOL	TOTAL VOL
6283	470	6753

CONFIDENTIAL PROPERTY OF POLY PROCESSING COMPANY NOT FOR REPRINT OR USE WITHOUT PERMISSION

DWG TITLE: 6250 GALLON SLOPE BOTTOM IMFO TANK

SCALE: 1/4"=1'-0"
DATE: 3/17/00
POLYPROCESSING COMPANY
Western Region
DR: MB WILKERSON
CH: D. OR
SHEET: 1 OF 1
COMPUTER: 11206250
REV: C

REV "C" REVISED FOR MOLD MODIFICATIONS BY:JB 6/16/03 CK:VH
REV "B" REVISED INFO STYLE BY:JB 4/30/03 CK:VH
REV "C" ADDED FITTING NOTE BY:JB 3/3/02 CK:HBV
REV "B" REVISED STOCK NUMBER BY:JB 3/3/02 CK:HBV
REV "A" ADDED LIFTING LUGS & DETAIL BY:JB 10/31/02 CK:VH

ADDITION DATE 10/09/03
REVISION NUMBER 1

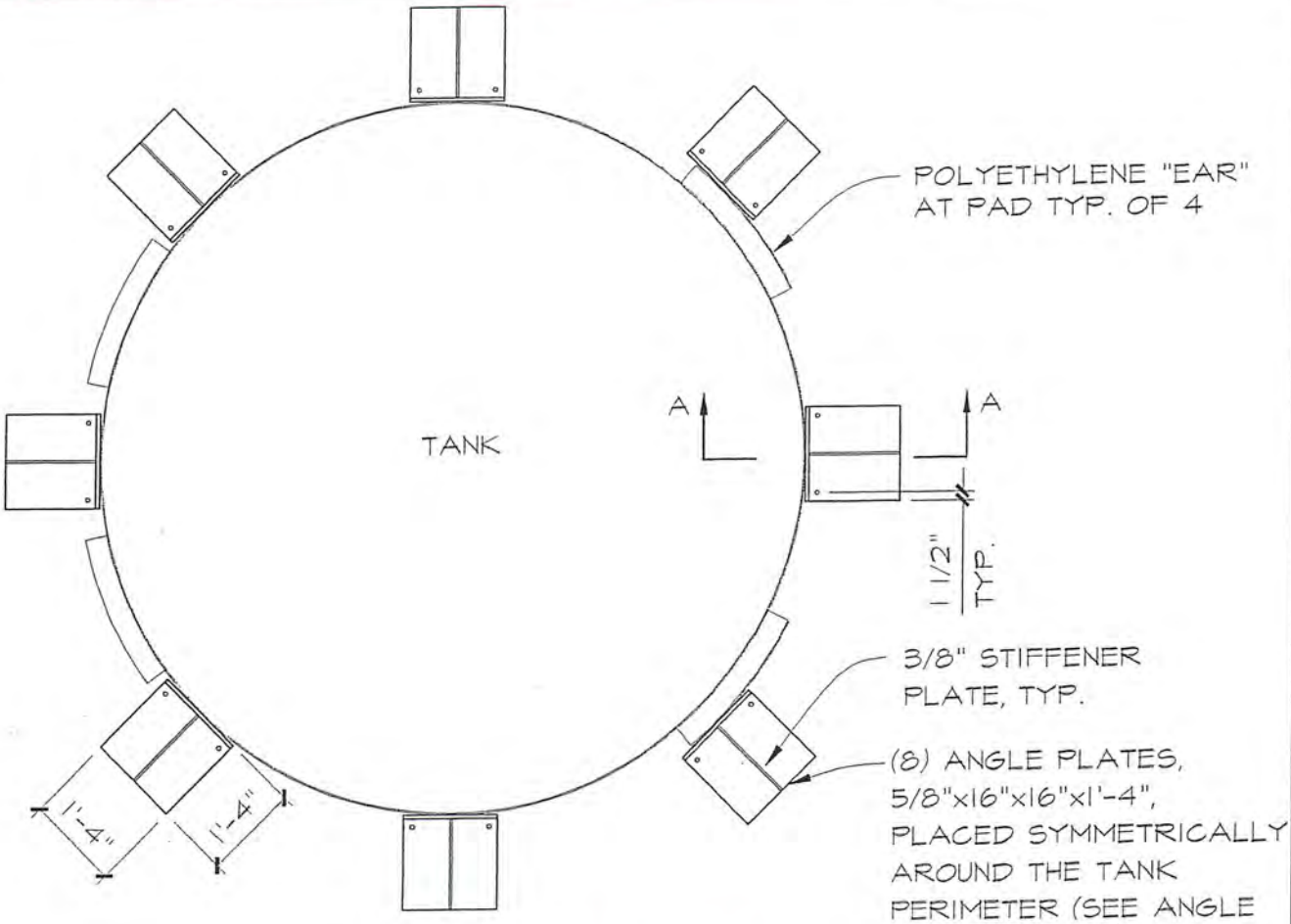

TANK NO's 201 - 208
CYLINDRICAL FLAT BOTTOM TANK

SCALE: 3/8"=1'-0"

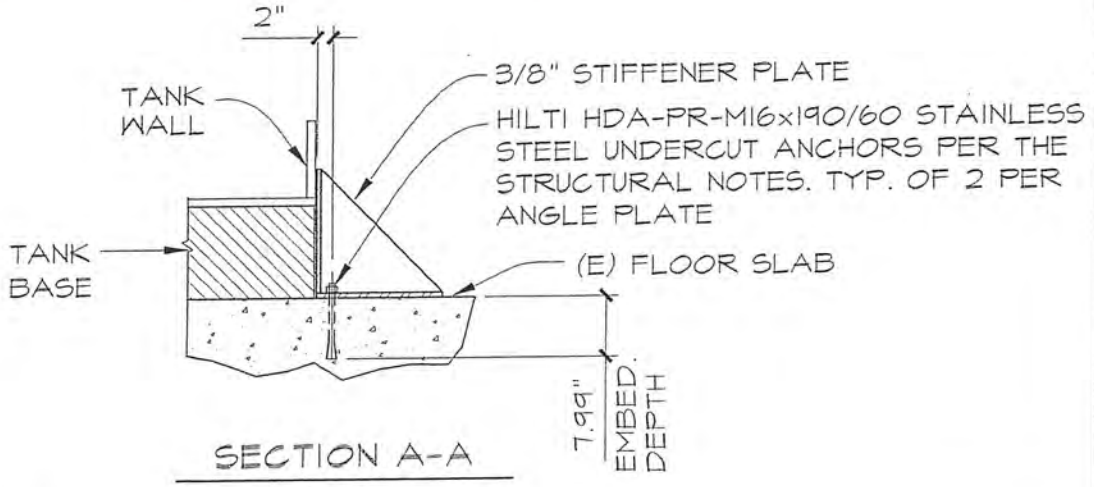

SECTION A-A

N.T.S.

tobey wade
CONSULTING
329 Flint Street
Reno, Nevada 89501
Tel. (775) 324-7757 Fax (775) 324-7797

PHILIP SERVICES CORPORATION
FERNLEY FACILITY
TANK NO's 201-208
ANCHORAGE DETAILS
FERNLEY, NEVADA

Project No.
R115-07-08

ADDITION DATE 10/09/09
Date: OCT. 5, 2009

REVISION NUMBER 1

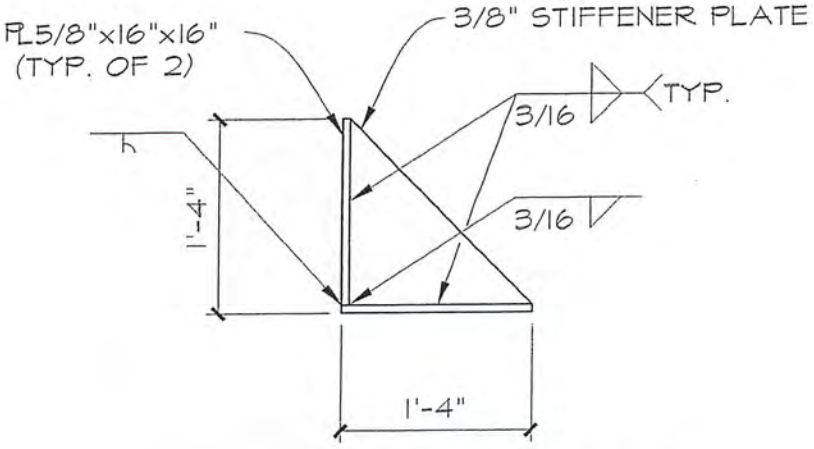

ANGLE PLATE DETAIL

SCALE: 3/4"=1'-0"

tobey **wade**
CONSULTING
329 Flint Street
Reno, Nevada 89501
Tel. (775) 324-7757 Fax (775) 324-7797

PHILIP SERVICES CORPORATION
FERNLEY FACILITY
TANK NO's 201-208
ANCHORAGE DETAILS
FERNLEY, NEVADA

Project No.
R115-07-08

ADDITION DATE 10/09/09
Date: OCT. 5, 2009

REVISION NUMBER 1

SCHIFF ASSOCIATES
FIFTY YEARS OF PROFESSIONALISM

gbell@schiffassociates.com

www.schiffassociates.com
Consulting Corrosion Engineers – Since 1959

October 6, 2009 via email to: Burgess, Aubry [ABurgess@pscnow.com]

PSC ENVIRONMENTAL SERVICES
2095 Newlands Drive E
Fernley, NV 89408

Attention: Mr. Aubry Burgess
Maintenance Supervisor

Re: **Material Compatibility/Corrosion Certification Letter for PLANNED Tank 205 for Cyanide/Alkaline Storage Tanks**
Amended Tank Replacement Plan
Fernley, NV
SA#08-1383LGL

Dear Mr. Burgess:

We have conducted the following investigations and research relative to the suitability and compatibility of the 6,250 Gallon sloped bottom High Density Polyethylene (HDPE) tanks fabricated by PolyProcessing with OR-1000™ lining system for cyanide/alkaline storage at ambient temperatures:

1) Reviewed PolyProcessing Company's product information provided on tank design and compatibility.

2) Conducted independent research on compatibility of high density cross-linked rotationally molded polyethylene for service at ambient temperature.

3) Visited the PSC facility in Fernley in December 2008 and March 2009 to understand the anticipated process flow and conditions of waste streams at the site.

4) Reviewed supplemental information requested from PolyProcessing Company regarding issues identified during site visit.

The tank design is suitable for cyanide/alkaline storage at ambient temperatures per the manufacturer's information in the position as Tank 205 in the waste processing stream of the PSC Facility as configured and intended per the Amended Tank Replacement Program outlined in the letter from Thomas Nelson of PSC to Nevada Division of Environmental Protection dated March 25, 2008.

1489 W. Warm Springs Road #110 · Henderson, NV 89014
Phone: 702.966.8266 · Fax: 702.946.6767

ADDITION DATE 10/09/09
REVISION NUMBER 1

CERTIFICATION

I certify under penalty of law that this document and all attachments were prepared under my direction or supervision according to a system designed to assure that qualified personnel properly gather and evaluate the information submitted. Based on my inquiry of the person or persons who manage the system, or those persons directly for gathering the information, the information submitted is, to the best of my knowledge and belief, true, accurate, and complete. I am aware that there are significant penalties for submitting false information, including the possibility of fine and imprisonment for knowing violations.

CLOSURE

Our services have been performed with the usual thoroughness and competence of the engineering profession. No other warranty or representation, either expressed or implied, is included or intended.

Sincerely,
SCHIFF ASSOCIATES

Graham E.C. Bell, PE
Principal Engineer
NACE International Corrosion Specialist #5350

Attachments: Proposed Storage Tank Drawing
Waste Information Provided by PSC on PolyProcessing Data Sheet
PolyProcessing Technical Bulletin, Chemical Resistance Technical Information
OR-1000 Tank Cut Sheet
OR-1000 Cut Sheet
OR-1000 Product Sheet
PolyProcessing Polyethylene Tank Life Expectancy
PolyProcessing Chemical Compatibility Data including Temperature Dependence
PolyProcessing Technical Bulletin, Crosslinked Polyethylene with OR-1000™ System, Dated June 2005, Rev. A

ADDITION DATE 10/09/09
REVISION NUMBER 1

NON-CONTROLLED COPY
INFORMATION SUBJECT TO CHANGE WITHOUT NOTICE
VERIFY REV LEVEL OF PAPER COPY WITH REV LEVEL ON PPC WEB SITE

Proposed Storage Tank

NOZZLE SCHEDULE & ACCESSORIES						
SERVICE	MK	STOCK NO.	SIZE	FITTING	DEG	ELEV

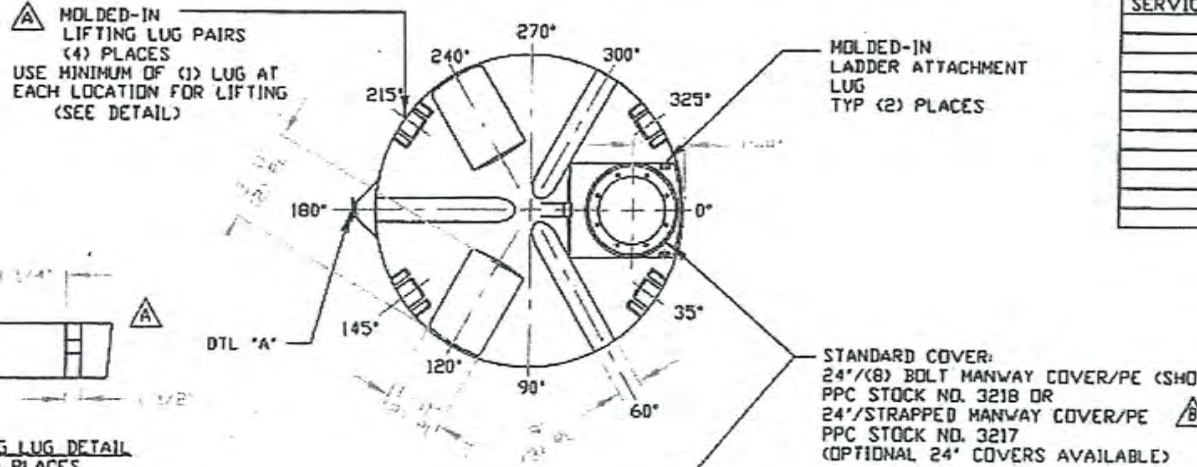

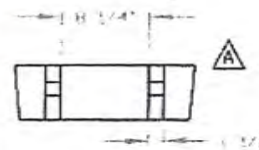

LIFTING LUG DETAIL
(4) PLACES
SCALE: 1"=1'-0"

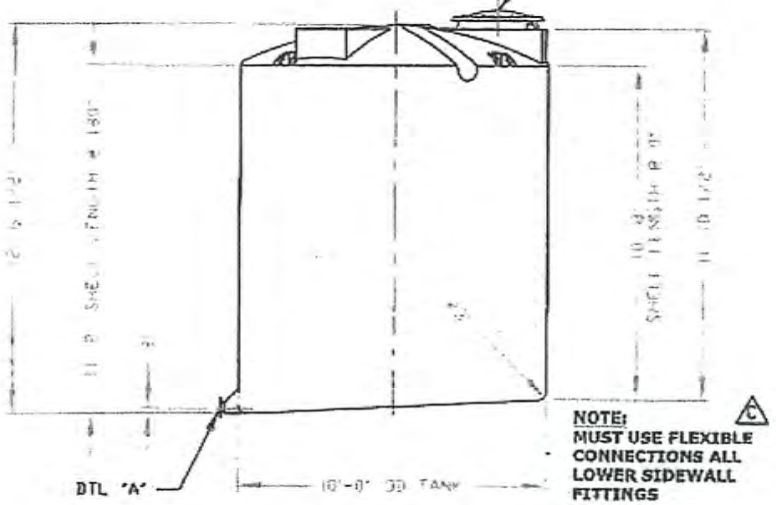

C NOTE:
MUST USE FLEXIBLE CONNECTIONS ALL LOWER SIDEWALL FITTINGS

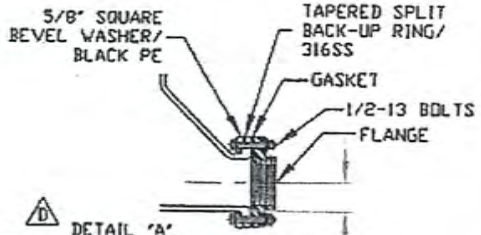

D DETAIL "A"
(INTEGRALLY MOLDED FLANGED OUTLET)
AVAILABLE IN 4" SIZE ONLY
SCALE: NONE

NOTES
1. THIS IS A COMPUTER GENERATED DWG. DO NOT REVISE BY HAND.
2. DIMENSIONS WILL VARY ±3% DUE TO VARIATIONS IN MULTIPLE MOLDS & CONDITIONS PREVALENT DURING MANUFACTURE & USAGE.
3. NO MOLDED IN GALLONAGE MARKERS THIS TANK.

CALCULATED CAPACITIES/ VOLUME IN U.S. GALLONS		
DESIGN CAP	DOME VOL	TOTAL VOL
6283	470	6753

CONFIDENTIAL PROPERTY OF POLY PROCESSING COMPANY NOT FOR REPRINT OR USE WITHOUT PERMISSION

DWG TITLE: 6250 GALLON SLOPE BOTTOM IMFO TANK

SCALE: 1/4"=1'-0"
DATE: 3/17/00
POLYPROCESSING COMPANY
Western Region
DR: MB WILKERSON
CK: D. RECTOR
SHEET: 1 OF 1
COMPUTER FILE: 11206250
REV: E

REV "E" REVISED FOR MOLD MODIFICATIONS BY:JB 6/16/053 CK:WM
REV "D" REVISED IMFO STYLE BY:JB 4/30/03 CK:WM
REV "C" ADDED FITTING NOTE BY:JB 3/3/02 CK:MBW
REV "B" REVISED STOCK NUMBER BY:JB 3/3/02 CK:MBW
REV "A" ADDED LIFTING LUGS & DETAIL BY:JB 10/31/02 CK:WM

Table I

The following chemicals do not attach or permeate high density crosslinkable polyethylene resins up to 100° F. Each application should be considered individually. All concentrations apply except where noted.

Acetic Acid <1%
Aluminum Salts
Alum
Ammonium Hydroxide
Ammonium Salts
Amyl Alcohol
Antimony Salts
Arsenic Acid
Barium Hydroxide
Benzene Sulfonic Acid <1%
Bismuth Salts
Boric Acid <10%
Bromic Acid <10%
Butanediol
Butyl Alcohol
Calcium Hydroxide
Calcium Salts
Chromic Acid<50%
Citric Acid <1%
Copper Salts
Detergents
Diazo Salts
Diethyl Carbonate
Diethanol Amine
Diethylene Glycol
Diglycolic Acid
Dimethylamine
Dimethyl Formamide

Ethyl Alcohol
Ethylene Glycol
Ferric Salts
Ferrous Salts
Fluoboric Acid <5%
Fluosilicic Acid
Formic Acid <1%
Gallic Acid
Gluconic Acid
Hexanol
Hydrazone<35%
Hydrozine Hydrochloride
Hydriodic Acid
Hydrobromic Acid
Hydrochloric Acid
Hydrofluoric Acid <5%
Hydrofluorosilicic Acid <5%
Hydrogen Peroxide<52%
Hydrogen Phosphide
Hydroquinone
Hypochorous Acid
Iodine Solutions
Lactic Acid
Latex
Lead Acetate
Magnesium Salts
Mercuric Salts
Mercurous Salts

Mercury
Methyl Alcohol
Methylsulfuric Acid
Michel Salts
Nicotinic Acid
Nitric Acid<50%
Oxalic Acid <1%
Perchloric Acid <1%
Phenol<10%
Potassium Hydroxide
Potassium Salts
Phosphoric Acid
Photographic Solutions
Propyl Alcohol
Propylene Glycol
Sea Water
Selenic Acid <1%
Sewage
Silicic Acid
Silver Salts
Soap Solutions
Sodium Ferricyanide
Sodium Ferrocyanide
Sodium Hydroxide
[1]Sodium Hypochlorite<9%
Sodium Salts
Sodium Sulfonates
Stanic Salts

Stannous Salts
Starch Solutions
Stearic Acid
[1]Sulfuric Acid <80%
Sulfurous Acid
Sugar Solution
Glucose
Lactose
Sucrose, etc.
Tannic Acid
Tanning Extracts
Tartaric Acid
Titintum Acid
Toluene Sulfonic Acid
Triethanolamine
Urea
Vinegar
Wetting Agents
Zinc Salts

[1]Concentrations above stated percentage require special considerations, contact factory for guidelines concerning these applications.

Table II

The following oils and organic chemicals do not attack HDXLPE resins. They will be absorbed into the wall of the tank; however, there should be no loss of chemical. Because of this absorption, no chemical other than the original should be stored in the tank as long as contamination may result as the absorbed oil is leached out. Storage at temperatures up to 100° F are possible provided the effects of the absorption on the properties of the tank are not prohibitive.

Fatty Acids	Mineral Oils	Animal Fats	Vegetable Oil
Butyric	Lube	Lard	Corn
Lauric	Transformer	Fish Oil	Coconut
Linoleic	Hydraulic	Musk Oil	Cottonseed
Oleic		Whale Oil	Olive
Palmitic			Peanut
Stearic			

Table III

The following organic chemicals do not attack high density crosslinkable polyethylene resins. They will be absorbed into the wall of tank and a permeation loss will occur. Because of this permeation and the effect it has on the physical properties of the tank, it is generally not recommended that these chemicals be storage at room temperatures above 100° F. However, their use largely depends on such factors as size of tank, its location, toxicity of the chemical, and applicable codes such as NFPA, OSHA, etc.

Aniline
Benzene
Carbon Tetrachloride
Chlorabenzene
Cychohexanol
Cycolohexnone
Dibutylphthalate
Diesel Fuel
Dimethylamine
Ethyl Butyrate
Ethylene Chlorohydin
Fuel Oil
Fufural
Aliphatic Hydrocarbons (hexane, octane, hexene, octene, etc.)
Jet Fuel
Gasoline
Nitrobenzene
Octyl Cresol
Propylene Dichloride
Toluene
Xylene

This document reports accurate and reliable information to the best of our knowledge, but our suggestions and recommendations cannot be guaranteed because the conditions of use are beyond our control. Information presented herein is given without reference to any patent questions which may be encountered in use thereof. Such questions should be investigated by those using this information. Poly Processing Company assumes no responsibility for the use of information presented herein and hereby disclaims all liability in regard to such use.

POLYPROCESSING COMPANY

Providing Solutions Through Innovation

Chemical Resistance

Chemical Resistance

Chemical "resistance" and "compatibility" are synonymous terms used in relation to the ability of a plastic to function in different environments. In regards to polyethylene chemical storage tanks, chemical resistance encompasses the total effect a product would have on a tank. The factors that make up the overall compatibility of a chemical to a rotomolded tank are (1) chemical attack, (2) absorption or permeation, and (3) solubility and stress crack resistance.

Chemical Attack

By definition, chemical attack involves an actual chemical reaction with the plastic. This can be a breaking of molecular chains and/or an addition of chemical groups to the molecule. For example, in the case of an oxidation reaction with polyethylene, both occur with the addition of carbonyl groups. This causes and eventual loss of properties to the point that a tank would not be serviceable.

Polyethylene in general is one of the most inert plastics available. Very few chemicals react with polyethylene and with those that do, the rate is relatively slow. The ultra high molecular weight characteristics of high density crosslinked polyethylene resins after crosslinking makes these particular polyethylenes even more resistant than other grades.

Permeation

This involves the physical absorption of the chemical into the polyethylene. If this is a volatile chemical, then an actual loss of the product can occur as the chemical vaporizes from the outer wall of the tank. The amount of absorption is generally limited to 3 to 7 percent by weight of the polyethylene. Also, the loss of volatile products is relatively small. For example, a 25-gallon tank with a 50-mil wall will only lose between 5 and 6 grams of gasoline per day due to permeation. The thicker the wall, the lower the rate of loss.

The absorption of a product into the wall of a tank will cause more property changes. The tensile strength is reduced approximately 15 to 20 percent and stiffness approximately 20 percent. Normally, this does not affect the utility of a tank or prohibit the application. The property losses due to permeation are offset by increasing the design wall thickness of the tank.

Elevated Temperature

The effects of elevated temperature (100° F or greater) on polyethylene tank are predictable and expected. Polyethylene, which is a flexible material, becomes even more flexible when heated. It will, therefore, bulge more at an elevated temperature than at room temperature.

By looking at the design hoop stress values for various temperatures, one can see the effects of increased temperature services. The values remain relatively constant up to 100° F, after which they begin to decrease.

100° F	600 psi	130° F	450 psi
110° F	550 psi	140° F	400 psi
120° F	500 psi	150° F	300 psi

A rise in temperature of 50° F (100° F to 150° F) reduces the design hoop stress value from 600 psi to 300 psi and doubles the required wall thickness. It follows that simply increasing the service rating of a tank from 1.35 S.G. to 1.65 S.G., or even to 1.90 S.G. is not necessarily sufficient. The proper wall thickness must be calculated for the temperature of service.

The maximum temperature rating for crosslinked polyethylene material is 150° F. Above that temperature the thermal stabilizers in the plastic are more rapidly consumed. Continued use will cause embrittlement and a reduction in the useful life of the part. Temperature services from 100° F to 150° F are acceptable applications, however, thicker tank walls are required to maintain a safe design. Consult the factory when application such as these arise.

Authorized Distributor:

Toll-Free 1-866-590-6845

www.polyprocessing.com

Table I

The following chemicals do not attach or permeate high density crosslinkable polyethylene resins up to 100° F. Each application should be considered individually. All concentrations apply except where noted.

Acetic Acid
Aluminum Salts
Alum
Ammonium Hydroxide
Ammonium Salts
Amyl Alcohol
Antimony Salts
Arsenic Acid
Barium Hydroxide
Benzene Sulfonic Acid
Bismuth Salts
Boric Acid
Bromic Acid
Butanediol
Butyl Alcohol
Calcium Hydroxide
Calcium Salts
Chromic Acid<50%
Citric Acid
Copper Salts
Detergents
Diazo Salts
Diethyl Carbonate
Diethanol Amine
Diethylene Glycol
Diglycolic Acid
Dimethylamine
Dimethyl Formamide
Ethyl Alcohol
Ethylene Glycol
Ferric Salts
Ferrous Salts
Fluoboric Acid
Fluosilicic Acid
Formic Acid
Gallic Acid
Gluconic Acid
Hexanol
Hydrazone<35%
Hydrozine Hydrochloride
Hydriodic Acid
Hydrobromic Acid
Hydrochloric Acid
Hydrofluoric Acid
Hydrofluorosilicic Acid
Hydrogen Peroxide<52%
Hydrogen Phosphide
Hydroquinone
Hypochorous Acid
Iodine Solutions
Lactic Acid
Latex
Lead Acetate
Magnesium Salts
Mercuric Salts
Mercurous Salts
Mercury
Methyl Alcohol
Methylsulfuric Acid
Michel Salts
Nicotinic Acid
Nitric Acid<50%
Oxalic Acid
Perchloric Acid
Phenol<10%
Potassium Hydroxide
Potassium Salts
Phosphoric Acid
Photographic Solutions
Propyl Alcohol
Propylene Glycol
Sea Water
Selenic Acid
Sewage
Silicic Acid
Silver Salts
Soap Solutions
Sodium Ferricyanide
Sodium Ferrocyanide
Sodium Hydroxide
[1]Sodium Hypochlorite<9%
Sodium Salts
Sodium Sulfonates
Stanic Salts
Stannous Salts
Starch Solutions
Stearic Acid
[1]Sulfuric Acid <80%
Sulfurous Acid
Sugar Solution
Glucose
Lactose
Sucrose, etc.
Tannic Acid
Tanning Extracts
Tartaric Acid
Titinium Acid
Toluene Sulfonic Acid
Triethanolamine
Urea
Vinegar
Wetting Agents
Zinc Salts

[1]Concentrations above stated percentage require special considerations, contact factory for guidelines concerning these applications.

Table II

The following oils and organic chemicals do not attack HDXLPE resins. They will be absorbed into the wall of the tank; however, there should be no loss of chemical. Because of this absorption, no chemical other than the original should be stored in the tank as long as contamination may result as the absorbed oil is leached out. Storage at temperatures up to 100° F are possible provided the effects of the absorption on the properties of the tank are not prohibitive.

Fatty Acids	**Mineral Oils**	**Animal Fats**	**Vegetable Oil**
Butyric	Lube	Lard	Corn
Lauric	Transformer	Fish Oil	Coconut
Linoleic	Hydraulic	Musk Oil	Cottonseed
Oleic		Whale Oil	Olive
Palmitic			Peanut
Stearic			

Table III

The following organic chemicals do not attack high density crosslinkable polyethylene resins. They will be absorbed into the wall of tank and a permeation loss will occur. Because of this permeation and the effect it has on the physical properties of the tank, it is generally not recommended that these chemicals be storage at room temperatures above 100° F. However, their use largely depends on such factors as size of tank, its location, toxicity of the chemical, and applicable codes such as NFPA, OSHA, etc.

Anitine
Benzene
Carbon Tetrachloride
Chlorabenzene
Cychohexanol
Cycolohexnone
Dibutylphthalate
Diesel Fuel
Dimethylamine
Ethyl Butyrate
Ethylene Chlorohydin
Fuel Oil
Fufural
Aliphatic Hydrocarbons (hexane, octane, hexene, octene, etc.)
Jet Fuel
Gasoline
Nitrobenzene
Octyl Cresol
Propylene Dichloride
Toluene
Xylene

This document reports accurate and reliable information to the best of our knowledge, but our suggestions and recommendations cannot be guaranteed because the conditions of use are beyond our control. Information presented herein is given without reference to any patent questions which may be encountered in use thereof. Such questions should be investigated by those using this information. Poly Processing Company assumes no responsibility for the use of information presented herein and hereby disclaims all liability in regard to such use.

OR-1000™ Tank Systems!

Specify Peace of Mind!

NSF/ANSI 61

- **OR-1000™ Engineered System**
- **4 Times Antioxidants**
- **Certified for 31+ Hazardous and Corrosive Chemical Applications**
- **Design Temperatures to 140°F**
- **Complies with State Regulations**

Provide Longer Tank Life with an IMFO®/OR-1000™ System!

Increase Tank Longevity!

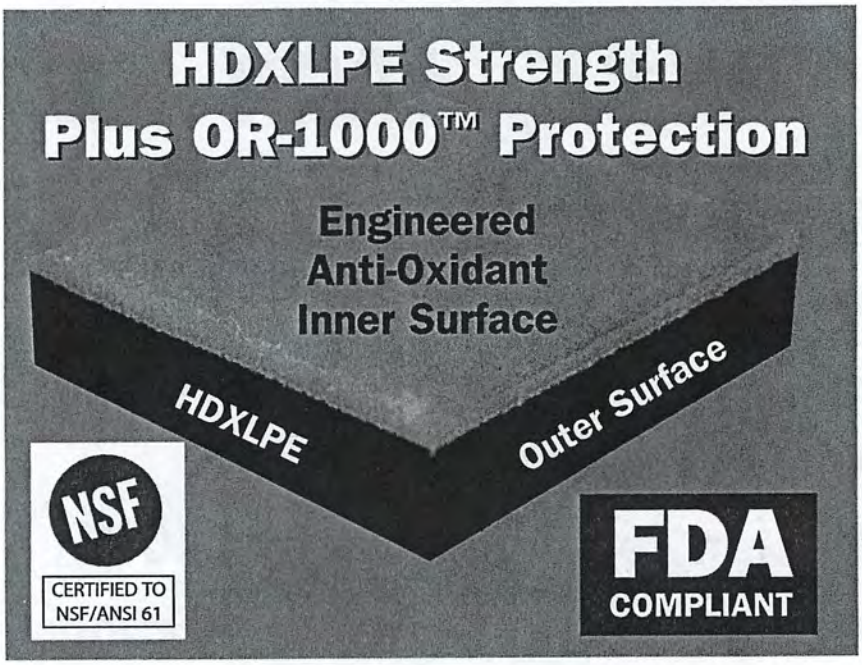

- Proven System since 1995
- Increased Chemical Resistance
- Complete Drain
- Maintenance Free
- Avoids Confined-Space Entry
- 4x Anti-Oxidant Package
- Sodium Hypochlorite/Sulfuric Acid/ Hydrochloric Acid applications*

*See warranty information on page 26

POLY PROCESSING COMPANY
Providing Solutions Through Innovation

Storage Solution: OR-1000 Liner

Poly Processing Company is the only rotational molding company with the ability to provide the strength, durability and safety of HDXLPE with the added value of an oxidation resistant liner, OR-1000, integrally molded as the interior surface of the part.

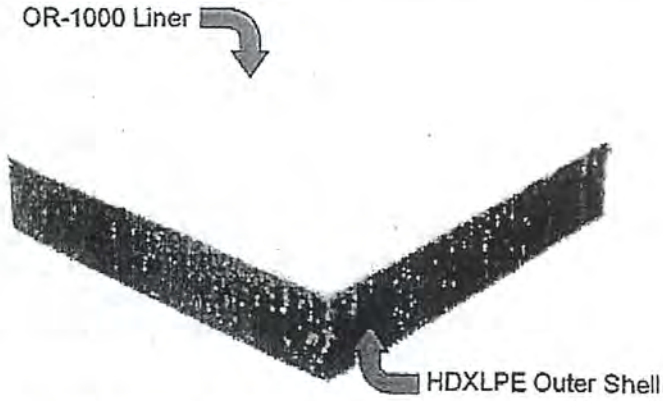

The liner thickness is in addition to the ASTM design thickness of the HDXLPE outer shell for the intended chemical application. This crosslink / OR-1000 combination has been successfully used for Sodium Hypochlorite and Sulfuric Acid services since 1995. To even further enhance the value of this combination, we are now adding this lining to the new high performance Metallocene High Density Crosslinked resin.

The reason for the OR-1000 material is simple. To develop the outstanding long-term properties of HDXLPE, the amount of anti-oxidants must be limited. Although HDXLPE has superior properties to any other rotational mold grade polyethylene, in a few highly oxidizing chemical applications, its optimum service life has not been obtained. To capitalize on the superior properties and performance characteristics of HDXLPE, the OR-1000 liner was developed to serve as an oxidation barrier to improve service life in oxidizing chemical applications. This combination provides unmatched performance and value to our customers.

Sodium Hypochlorite and Sulfuric Acid remain very difficult storage and handling applications. However, we continue to bring you the very best in value, service and high performance products -- Poly Processing Company, *providing solutions through innovation.*

CERTIFIED ISO 9001

member

THE CHLORINE INSTITUTE, INC.
member

CLASSIFIED UL

Authorized Distributor:

1-866-590-6845
www.polyprocessing.com

POLY PROCESSING COMPANY

Providing Solutions Through Innovation

Polyethylene Tank Life Expectancy

For 35 years, Poly Processing Company has been **Helping Our Customers . . . Solve Problems** associated with storing hazardous chemicals, **Managing Risk** with the Environment and Employee Safety and **Growing Their Profits** with Increased Tank Longevity and Operating Efficiencies. We have specialized in providing hazardous chemical storage solutions to the industrial, water and waste water markets. While we manufacture both linear and crosslink polyethylene storage tanks; in **hazardous chemical environments, crosslink polyethylene** is the material of choice. Our customers report crosslink polyethylene tanks providing service for 10+ years with 15 to 20 years of tank service being common. However; there are many factors and variables that have an effect on the useful life of any tank including polyethylene.

Chemical, Concentration and Temperature: The chemical, concentration and operating temperature are all factors influencing the life expectancy of a polyethylene tank. For example, high concentrations of Sulfuric Acid are stress cracking agents and are more aggressive oxidizers than less concentrated chemicals such as 25% Caustic Soda. For this reason, Poly Processing offers our customers the OR-1000™ Anti-Oxidant Systems. Another example: 12% Sodium Hypochlorite will degrade from UV exposure and elevated temperatures. As it degrades, sediment builds in the bottom of the tank leading to a shorter tank life. To eliminate this sludge buildup, Poly Processing Company offers our customers the IMFO® (Integrally Molded Flanged Outlet). The IMFO® design promotes continuous "system" flushing increasing tank life and operating efficiencies. Poly Processing Company chemical storage tanks are constructed from premium materials and designed specifically for the chemical, concentration and temperature requirements.

Installation and Piping: The single biggest reason for tank life reduction is improper tank installation and **"hard"** piping. Polyethylene's broad spectrum of chemical resistance vs. other materials of construction is based on its ability to expand and contract. Flexible connections compensate for tank expansion and contraction promoting a longer useful life. It is important to follow Poly Processing Company's Installation Manual Instructions during the installation process.

Venting: Often overlooked, venting is a very important step that promotes tank longevity. Polyethylene tanks are rated at atmospheric pressure/vacuum. Adequate vent size is always based on flow and delivery rates so it is important to gather the following information to adequately determine the proper venting requirements:

1) Is the tank to be filled pneumatically?
2) Is the tank to be vented to atmosphere?
3) Does the length of the vent exceed 3 feet (piped to a central vent system)
4) Is a fume scrubbing system to be used?
5) Are vent screens to be used (restricts flow)?
6) Does the tank manufacturer offer a method of "emergency venting" to prevent over-pressurization?

Other Items Effecting Tank Longevity:

1) Continuous cycling (fill / discharge)
2) Excessive agitation
3) Mobile applications

For further information about your specific needs or applications, please contact Poly Processing Company at 1-866-590-6845 or visit our website at www.polyprocessing.com.

POLYPROCESSING

Providing Solutions Through Innovation

Chemical Resistance

Chemical Resistance

Chemical "resistance" and "compatibility" are synonymous terms used in relation to the ability of a plastic to function in different environments. In regards to polyethylene chemical storage tanks, chemical resistance encompasses the total effect a product would have on a tank. The factors that make up the overall compatibility of a chemical to a rotomolded tank are (1) chemical attack, (2) absorption or permeation, and (3) solubility and stress crack resistance.

Chemical Attack

By definition, chemical attack involves an actual chemical reaction with the plastic. This can be a breaking of molecular chains and/or an addition of chemical groups to the molecule. For example, in the case of an oxidation reaction with polyethylene, both occur with the addition of carbonyl groups. This causes and eventual loss of properties to the point that a tank would not be serviceable.

Polyethylene in general is one of the most inert plastics available. Very few chemicals react with polyethylene and with those that do, the rate is relatively slow. The ultra high molecular weight characteristics of high density crosslinked polyethylene resins after crosslinking makes these particular polyethylenes even more resistant than other grades.

Permeation

This involves the physical absorption of the chemical into the polyethylene. If this is a volatile chemical, then an actual loss of the product can occur as the chemical vaporizes from the outer wall of the tank. The amount of absorption is generally limited to 3 to 7 percent by weight of the polyethylene. Also, the loss of volatile products is relatively small. For example, a 25-gallon tank with a 50-mil wall will only lose between 5 and 6 grams of gasoline per day due to permeation. The thicker the wall, the lower the rate of loss.

The absorption of a product into the wall of a tank will cause more property changes. The tensile strength is reduced approximately 15 to 20 percent and stiffness approximately 20 percent. Normally, this does not affect the utility of a tank or prohibit the application. The property losses due to permeation are offset by increasing the design wall thickness of the tank.

Elevated Temperature

The effects of elevated temperature (100° F or greater) on polyethylene tank are predictable and expected. Polyethylene, which is a flexible material, becomes even more flexible when heated. It will, therefore, bulge more at an elevated temperature than at room temperature.

By looking at the design hoop stress values for various temperatures, one can see the effects of increased temperature services. The values remain relatively constant up to 100° F, after which they begin to decrease.

100° F	600 psi	130° F	450 psi
110° F	550 psi	140° F	400 psi
120° F	500 psi	150° F	300 psi

A rise in temperature of 50° F (100° F to 150° F) reduces the design hoop stress value from 600 psi to 300 psi and doubles the required wall thickness. It follows that simply increasing the service rating of a tank from 1.35 S.G. to 1.65 S.G., or even to 1.90 S.G. is not necessarily sufficient. The proper wall thickness must be calculated for the temperature of service.

The maximum temperature rating for crosslinked polyethylene material is 150° F. Above that temperature the thermal stabilizers in the plastic are more rapidly consumed. Continued use will cause embrittlement and a reduction in the useful life of the part. Temperature services from 100° F to 150° F are acceptable applications, however, thicker tank walls are required to maintain a safe design. Consult the factory when application such as these arise.

Crosslinked Polyethylene with OR-1000™ System
The #1 System for Oxidizing Chemical Environments

Poly Processing Company and other polyethylene tank manufacturers, as well as major polyethylene resin manufacturers have published many documents over the past several years discussing the benefits of certain rotational molding resins in acidic and alkaline chemical environments. The majority of these documents support the use of crosslinked polyethylene over linear polyethylene in acidic and basic chemical environments. These articles speak to the longevity of crosslinked polyethylene rotationally molded tanks, the safety of having polymer chains that are chemically bonded, and the leveraged investment of knowing that crosslinked polyethylene chemical storage tanks have been utilized for the last 35 years.

In 2001, one of the largest resin manufacturers in North America published a fairly extensive study which showed that their linear polyethylene in a lab environment performed as well as, if not better than crosslinked polyethylene, in acidic and alkaline chemical applications. This study, coupled with marketing efforts by linear polyethylene tank manufacturers who do not rotationally mold crosslinked polyethylene tanks in the course of their normal business, has given rise to some industry confusion and misunderstanding about what is the best resin system for storing oxidizing chemicals. We will summarize the facts about rotationally molded polyethylene storage tanks and the value of an engineered antioxidant resin system coupled with the long-term performance of crosslinked polyethylene.

We would first like to discuss the lab study performed by the linear resin manufacturer. The study compared crosslinked polyethylene with linear polyethylene in sulphuric acid and sodium hypochlorite environments. The sulphuric acid was concentrated approximately 93%-97%, and the Sodium Hypochlorite was around 14% concentration. The lab study describes how the crosslinked polyethylene and linear polyethylene were submersed in the chemicals and then tested using ARM Impact testing as well as Environmental Stress Crack Resistivity (ESCR) testing. The study concluded that the linear materials in a chemical resistivity mode held up as well as crosslinked materials in a lab environment. In addition, Higher ESCR properties are found in lower density materials like LLDPE or LDPE as compared to HDPE resins. It doesn't mean you want to use a tank made only from the lower density resins. ESCR shows how well the material performs in a pre-notched condition in the presence of certain chemicals.

The lab study performed by the resin manufacturer did not cover or discuss the long-term properties of these materials in harsh, environmental conditions. Over time, sodium hypochlorite and sulphuric acid create an oxidative environment, which remove hydrogen molecules from the polymer chains creating embrittlement. This phenomenon is inherent to all types of polyethylene, since they are hydrocarbon based molecules. Storing acids and bases in actual everyday environments presents a completely different set of parameters and stresses that have little to do with the lab environment.

Poly Processing Company has been aware of this relationship between ESCR and Chemical resistance for many years and has been an industry leader in creating engineered resin systems which give the end user the ability to have excellent oxidation and chemical resistivity without sacrificing long term performance and toughness. These engineered resin systems deliver peace of mind, a margin of safety, and leveraged investment to the end user.

Another critical factor to consider when storing acids and bases in actual everyday environments is the Long Term Hydrostatic Strength (LTHS) of the polyethylene. LTHS properties are one of the keys to providing the continued strength necessary for tanks during its service life. This property is especially important in field applications where tanks can see elevated temperatures approaching

140°F. LTHS tests are conducted at both ambient temperature (73°F) and at elevated temperature (140°F) since actual field conditions are typically in this range.
Figure 1.

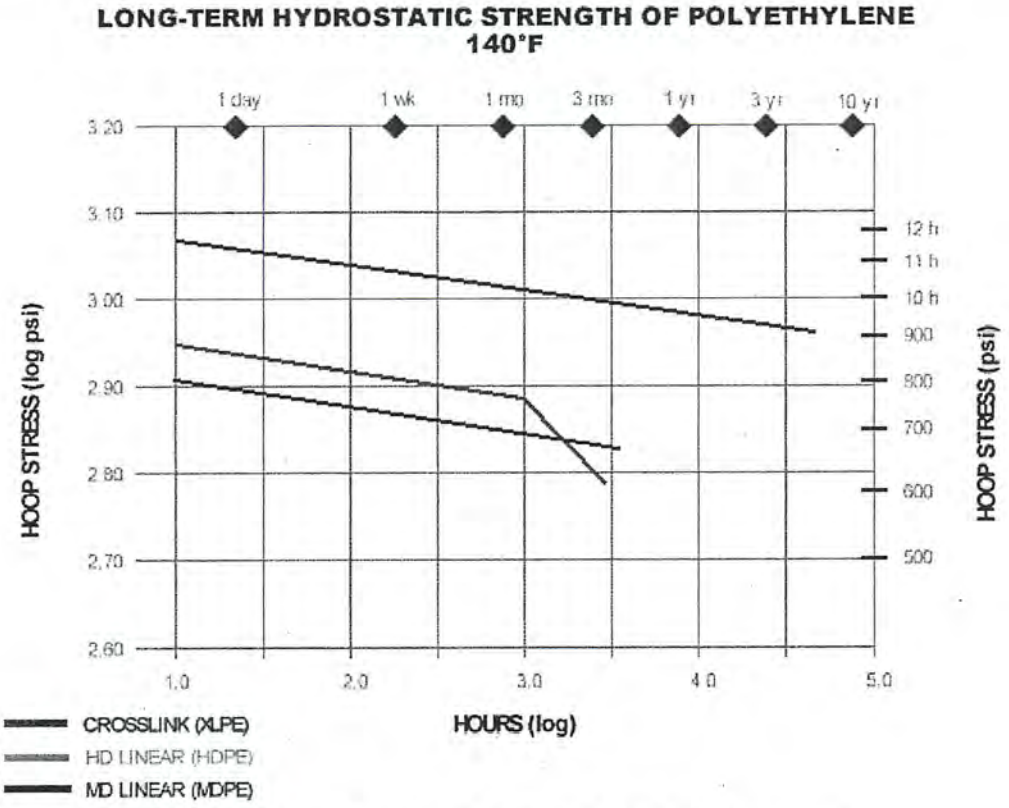

Source: Chevron Phillips Company, Plastics Technical Center

The rapid deterioration in properties is indicated by a "knee" in the curve of hoop strength versus time as illustrated in Figure 1 above. Even high performance HDPE will develop a LTHS knee at around 1000 hours (log 3), and some MDPE products will have a knee in less than 10,000 hours (log 5). This type of performance substantially reduces the expected long-term performance at elevated temperatures. Crosslinked polyethylene has been tested to 50,000 hours at 140°F and shows no signs of a knee.

There is still the need to surround the oxidation resistant material with a robust resin system that will give you longer useful tank life, superior impact resistance, and greater tensile strength for a safer product. That is why crosslinked polyethylene is still the material of choice for industrial and municipal chemical applications.

Poly Processing Company has been the leader in rotationally molded crosslinked polyethylene storage tanks for 35 years. We work with the leading universities in the country to develop engineered resin systems that will perform above and beyond any standard "off the shelf" polyethylene in harsh, oxidizing environments. One of the systems we developed is the OR-1000™ system. This system uses the best linear resin for chemical resistivity combined with four (4) times the antioxidant power and a crosslink outer wall for maximum long-term performance and durability.

Poly Processing Company developed the OR-1000™ oxidation resistance system in 1995. This lower density linear material serves to increase the service life of crosslinked polyethylene tanks in oxidizing chemical service (Sodium Hypochlorite, Sulphuric Acid, Hydrochloric Acid, and Nitric Acid). To develop the outstanding long-term physical properties of crosslinked polyethylene, the amount of antioxidant compounded into the material has to be limited. Although crosslinked polyethylene has superior properties to any other rotational molding grade polyethylene, the tank's useful service life will be reduced without the OR-1000™ system. In order to utilize the superior properties of crosslinked polyethylene, the OR-1000™ system was developed to greatly improve the service life in harsh oxidizing chemical environments. This material is a medium density linear based resin with a large amount of antioxidant added to it for the best oxidizing resistance system in the industry. The OR-1000™ system has been engineered to prevent de-lamination during the useful life of the tank.

To compare the effect of oxidizing chemicals on the OR-1000™ system and crosslinked polyethylene, 1/8" thick tensile bars of both OR-1000™ and crosslinked polyethylene were submerged in a manufacturer's storage tank. This tank handled a highly oxidizing chemical, 17% Sodium Hypochlorite, and was emptied and filled at least once a day. Every 30 days, samples were pulled and tensile and percent elongation was determined as well as ESCR tests. Oxidization or reduction in physical properties is indicated by reduced in elongation. After six months of testing, the elongation of the crosslinked polyethylene tensile bars had decreased 26% while OR-1000™ elongation had no change. This is due to the added antioxidant in the OR-1000™ system as well as the fact that the linear material used in the testing was a lower density material than the crosslinked material.

Crosslinked polyethylene provides superior environmental stress cracking resistance (ESCR) or sometimes generally referred to as resistance to slow crack growth (SCG) in almost all chemical applications. Two tests which clearly show this difference are the bent strip ESCR (ASTM D1693) with 10% Igepal where crosslink polyethylene does not fail in over 1000 hours compared to typical values for LMDPE of <400 hours. Another test which shows the slow crack growth difference with no surfactant (in air) is the polyethylene notch test (PENT) described in ASTM F 1473 and crosslink polyethylene again does not fail in over 1000 hours and LMDPE grades fail in <100 hours. Even though linear polyethylene grades with improved ESCR have become available over the past 10 to 15 years, they still do not match crosslinked polyethylene in SCG performance. Slow crack growth resistance as was shown earlier in this paper is an important property that can affect the long-term performance of tanks.

The best of both worlds is having the OR-1000™ system for the long-term oxidative resistivity characteristics (as discussed in the resin manufacturer's lab study), with the robustness of crosslinked polyethylene for the long-term durability and long useful life that is expected of industrial grade chemical storage tanks. This is why so many chemical manufacturers and distributors choose Poly Processing Company for engineered chemical storage solutions.

Crosslinked polyethylene tanks with the OR-1000™ system varying in sizes from 500 gallons to 14,950 gallons have been in true industrial and municipal use for over 10 years with excellent results. Poly Processing Company backs every crosslinked polyethylene tank with the OR-1000™ system with a 5 year full warranty on all suitable applications including sodium hypochlorite and hydrochloric acid, sulfuric acid 80%-98% carries a full 3 year warranty

Store your harsh oxidizing chemicals with the confidence and peace of mind that you deserve. Specify Poly Processing Company's crosslinked polyethylene tanks with the OR-1000™ system for longevity, safety, and leveraged investment. Please consult your distributor or Poly Processing Company at 1-866-590-6845 for your specific requirements.

NON-CONTROLLED COPY
INFORMATION SUBJECT TO CHANGE WITHOUT NOTICE
VERIFY REV LEVEL OF PAPER COPY WITH REV LEVEL ON PPC WEB SITE

Proposed Storage Tank

(A) MOLDED-IN LIFTING LUG PAIRS (4) PLACES
USE MINIMUM OF (1) LUG AT EACH LOCATION FOR LIFTING (SEE DETAIL)

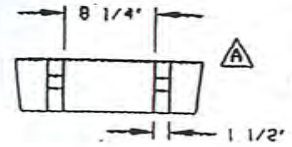

LIFTING LUG DETAIL
(4) PLACES
SCALE: 1"=1'-0"

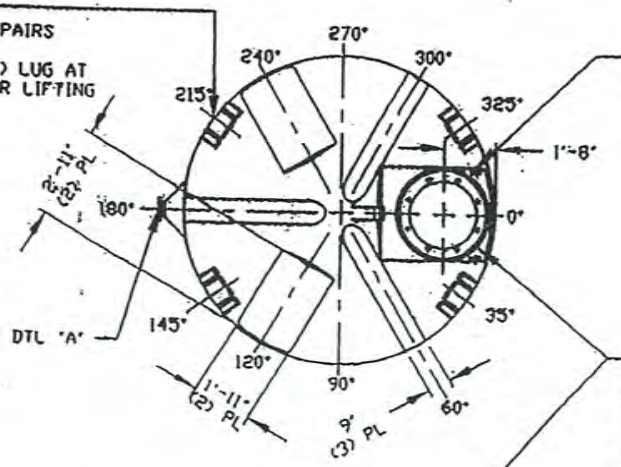

MOLDED-IN LADDER ATTACHMENT LUG TYP (2) PLACES

STANDARD COVER:
24"/(8) BOLT MANWAY COVER/PE (SHOWN)
PPC STOCK NO. 3218 OR
24"/STRAPPED MANWAY COVER/PE (B)
PPC STOCK NO. 3217
(OPTIONAL 24" COVERS AVAILABLE)

NOZZLE SCHEDULE & ACCESSORIES

SERVICE	MK	STOCK NO.	SIZE	FITTING	DEG	ELEV

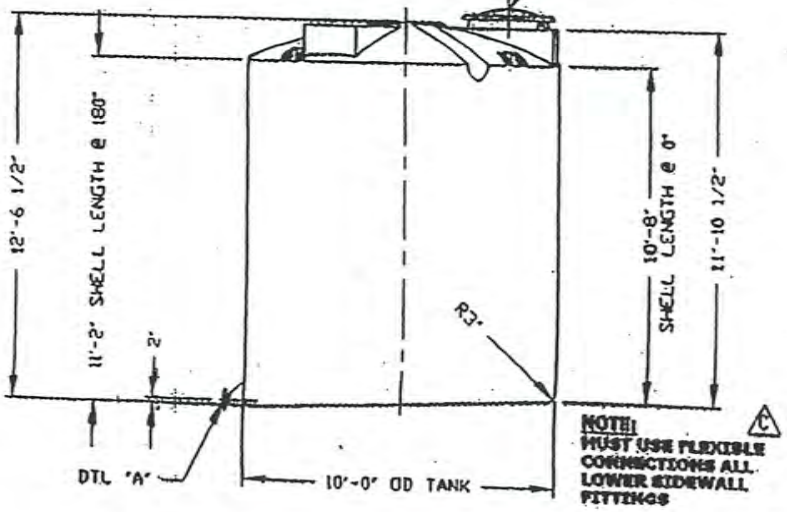

(C) NOTE:
MUST USE FLEXIBLE CONNECTIONS ALL LOWER SIDEWALL FITTINGS

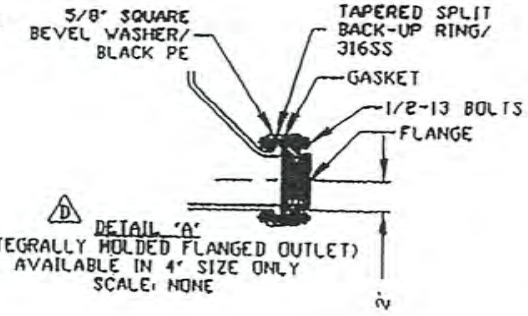

(D) DETAIL 'A'
(INTEGRALLY MOLDED FLANGED OUTLET)
AVAILABLE IN 4" SIZE ONLY
SCALE: NONE

NOTES
1. THIS IS A COMPUTER GENERATED .DWG. DO NOT REVISE BY HAND.
2. DIMENSIONS WILL VARY ±3% DUE TO VARIATIONS IN MULTIPLE MOLDS & CONDITIONS PREVALENT DURING MANUFACTURE & USAGE.
3. NO MOLDED IN GALLONAGE MARKERS THIS TANK.

CALCULATED CAPACITIES/ VOLUME IN U.S. GALLONS

DESIGN CAP	DOME VOL	TOTAL VOL
6283	470	6753

CONFIDENTIAL PROPERTY OF POLY PROCESSING COMPANY
NOT FOR REPRINT OR USE WITHOUT PERMISSION

SUB TITLE
6250 GALLON SLOPE BOTTOM IMFO TANK

SCALE 1/4"=1'-0"
DATE 3/17/00
POLYPROCESSING COMPANY
Western Region
BY HB WILKERSON
CC D. RECTOR
SHEET 1 OF 1
COMPUTER FILE 11206250
REV C

REV "E" REVISED FOR MOLD MODIFICATIONS BY:JB 6/16/053 CK:VH
REV "D" REVISED INFO STYLE BY:JB 4/30/03 CK:VH
REV "C" ADDED FITTING NOTE BY:JB 3/3/02 CK:HBV
REV "B" REVISED STOCK NUMBER BY:JB 3/3/02 CK:HBV
REV "A" ADDED LIFTING LUGS & DETAIL BY:JB 10/31/02 CK:VH

ADDITION DATE 10/06/09
REVISION NUMBER 1

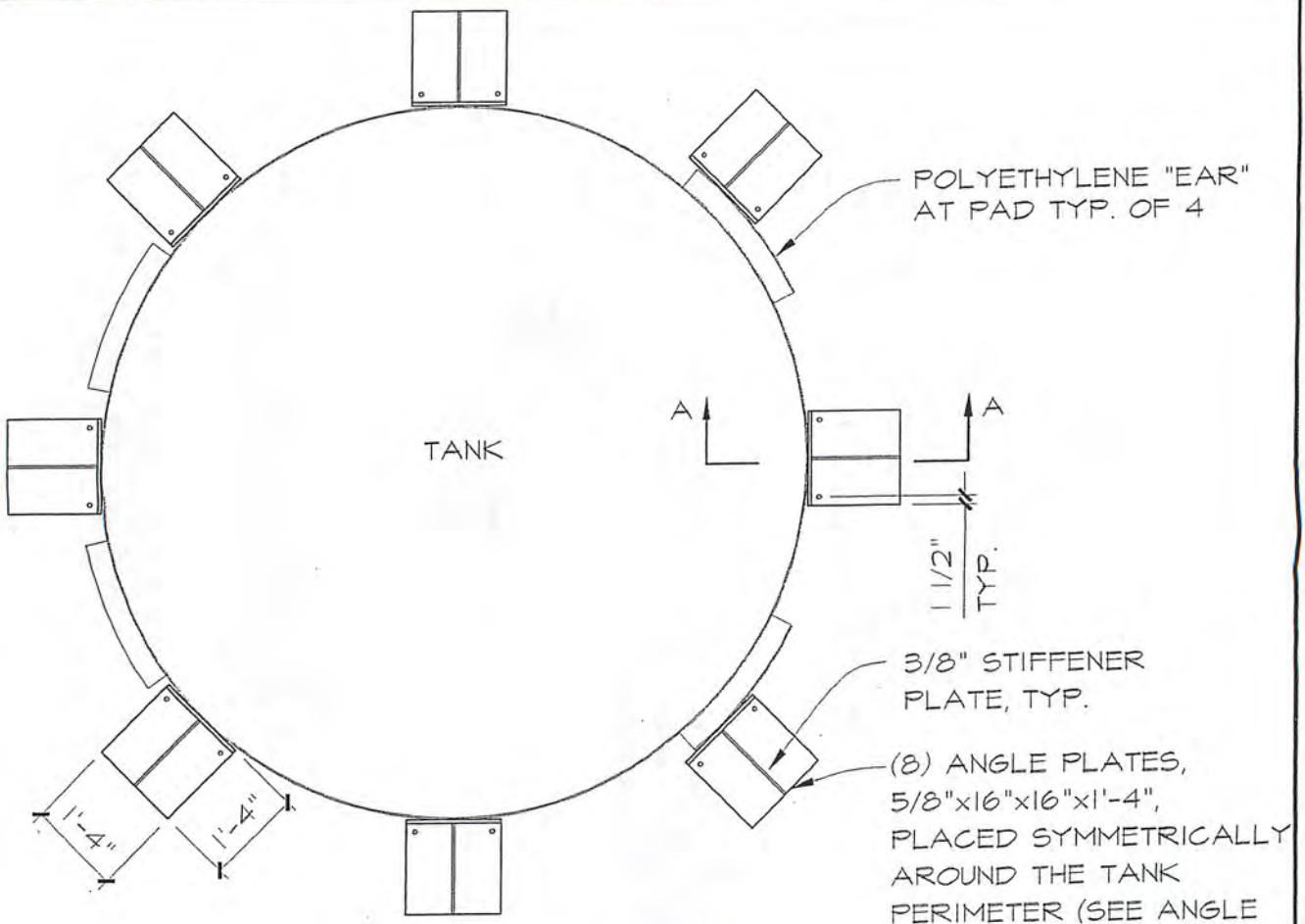

TANK NO's 201 - 208
CYLINDRICAL FLAT BOTTOM TANK

SCALE: 3/8"=1'-0"

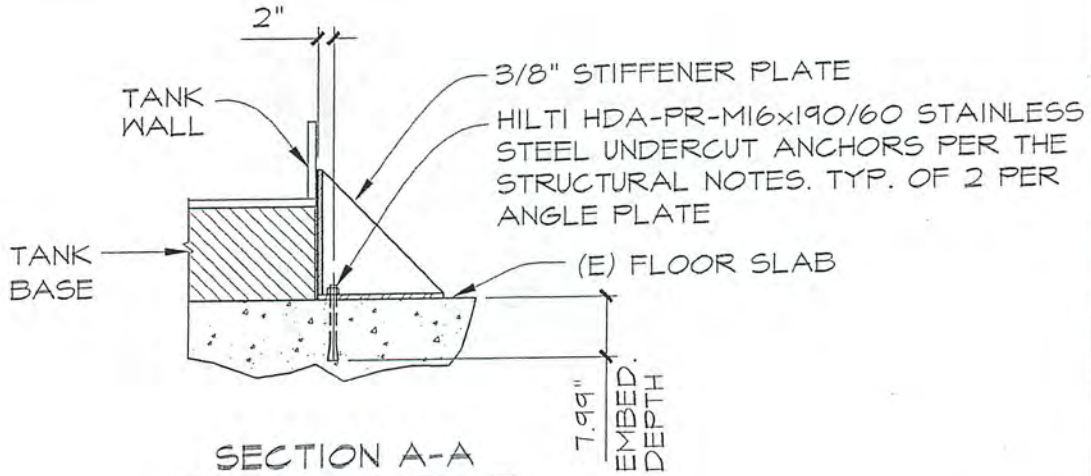

SECTION A-A

N.T.S.

tobey **wade**
CONSULTING
329 Flint Street
Reno, Nevada 89501
Tel. (775) 324-7757 Fax (775) 324-7797

PHILIP SERVICES CORPORATION
FERNLEY FACILITY
TANK NO's 201-208
ANCHORAGE DETAILS
FERNLEY, NEVADA

Project No.
R115-07-08

ADDITION DATE 10/09/09
Date: OCT. 9, 2009

REVISION NUMBER 1

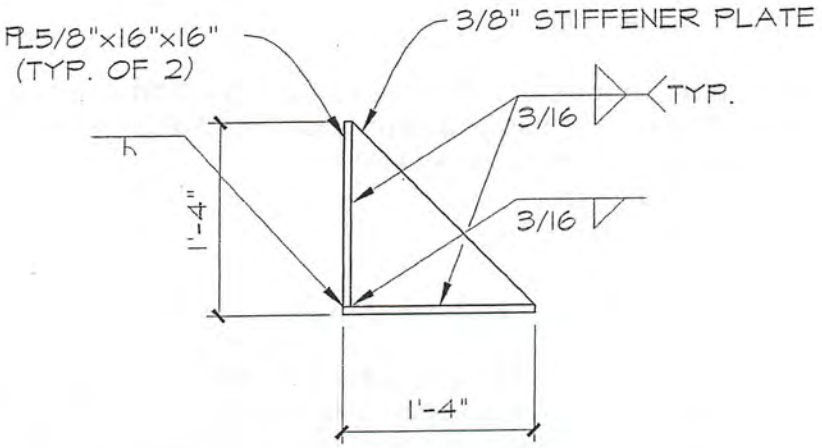

ANGLE PLATE DETAIL

SCALE: 3/4"=1'-0"

tobey **wade**
CONSULTING
329 Flint Street
Reno, Nevada 89501
Tel. (775) 324-7757 Fax (775) 324-7797

PHILIP SERVICES CORPORATION
FERNLEY FACILITY
TANK NO's 201-208
ANCHORAGE DETAILS
FERNLEY, NEVADA

Project No.
R115-07-08

ADDITION DATE 10/09/08
Date: OCT. 5, 2009

REVISION NUMBER 1

SCHIFF ASSOCIATES
FIFTY YEARS OF PROFESSIONALISM

gbell@schiffassociates.com

www.schiffassociates.com
Consulting Corrosion Engineers – Since 1959

October 6, 2009 via email to: Burgess, Aubry [ABurgess@pscnow.com]

PSC ENVIRONMENTAL SERVICES
2095 Newlands Drive E
Fernley, NV 89408

Attention: Mr. Aubry Burgess
Maintenance Supervisor

Re: **Material Compatibility/Corrosion Certification Letter for PLANNED Tank 206 for Cyanide/Alkaline Storage Tanks**
Amended Tank Replacement Plan
Fernley, NV
SA#08-1383LGL

Dear Mr. Burgess:

We have conducted the following investigations and research relative to the suitability and compatibility of the 6,250 Gallon sloped bottom High Density Polyethylene (HDPE) tanks fabricated by PolyProcessing with OR-1000™ lining system for cyanide/alkaline storage at ambient temperatures:

1) Reviewed PolyProcessing Company's product information provided on tank design and compatibility.

2) Conducted independent research on compatibility of high density cross-linked rotationally molded polyethylene for service at ambient temperature.

3) Visited the PSC facility in Fernley in December 2008 and March 2009 to understand the anticipated process flow and conditions of waste streams at the site.

4) Reviewed supplemental information requested from PolyProcessing Company regarding issues identified during site visit.

The tank design is suitable for cyanide/alkaline storage at ambient temperatures per the manufacturer's information in the position as Tank 206 in the waste processing stream of the PSC Facility as configured and intended per the Amended Tank Replacement Program outlined in the letter from Thomas Nelson of PSC to Nevada Division of Environmental Protection dated March 25, 2008.

ADDITION DATE 10/09/09

REVISION NUMBER 1

CERTIFICATION

I certify under penalty of law that this document and all attachments were prepared under my direction or supervision according to a system designed to assure that qualified personnel properly gather and evaluate the information submitted. Based on my inquiry of the person or persons who manage the system, or those persons directly for gathering the information, the information submitted is, to the best of my knowledge and belief, true, accurate, and complete. I am aware that there are significant penalties for submitting false information, including the possibility of fine and imprisonment for knowing violations.

CLOSURE

Our services have been performed with the usual thoroughness and competence of the engineering profession. No other warranty or representation, either expressed or implied, is included or intended.

Sincerely,
SCHIFF ASSOCIATES

GRAHAM E.C. BELL
EXP: 12-31-10
MECHANICAL

Graham E.C. Bell, PE
Principal Engineer
NACE International Corrosion Specialist #5350

Attachments: Proposed Storage Tank Drawing
Waste Information Provided by PSC on PolyProcessing Data Sheet
PolyProcessing Technical Bulletin, Chemical Resistance Technical Information
OR-1000 Tank Cut Sheet
OR-1000 Cut Sheet
OR-1000 Product Sheet
PolyProcessing Polyethylene Tank Life Expectancy
PolyProcessing Chemical Compatibility Data including Temperature Dependence
PolyProcessing Technical Bulletin, Crosslinked Polyethylene with OR-1000™ System, Dated June 2005, Rev. A

ADDITION DATE 10/09/09
REVISION NUMBER 1

NON-CONTROLLED COPY

INFORMATION SUBJECT TO CHANGE WITHOUT NOTICE

VERIFY REV LEVEL OF PAPER COPY WITH REV LEVEL ON PPC WEB SITE

Proposed Storage Tank

A MOLDED-IN LIFTING LUG PAIRS (4) PLACES
USE MINIMUM OF (1) LUG AT EACH LOCATION FOR LIFTING (SEE DETAIL)

MOLDED-IN LADDER ATTACHMENT LUG TYP (2) PLACES

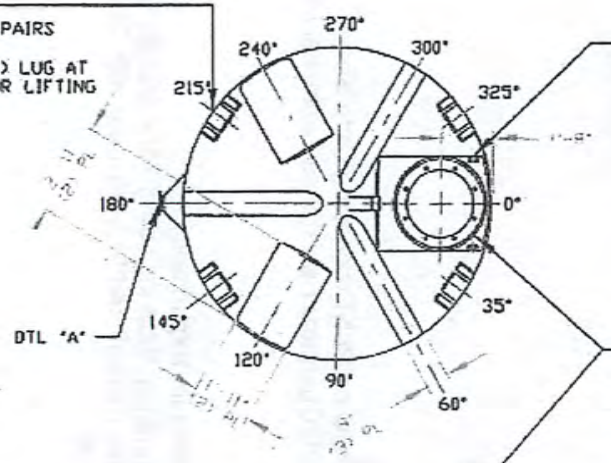

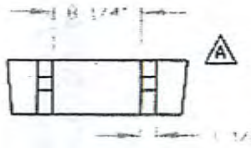

LIFTING LUG DETAIL
(4) PLACES
SCALE: 1"=1'-0"

STANDARD COVER:
24"/(8) BOLT MANWAY COVER/PE (SHOWN)
PPC STOCK NO. 3218 OR
24"/STRAPPED MANWAY COVER/PE
PPC STOCK NO. 3217
(OPTIONAL 24" COVERS AVAILABLE)

B

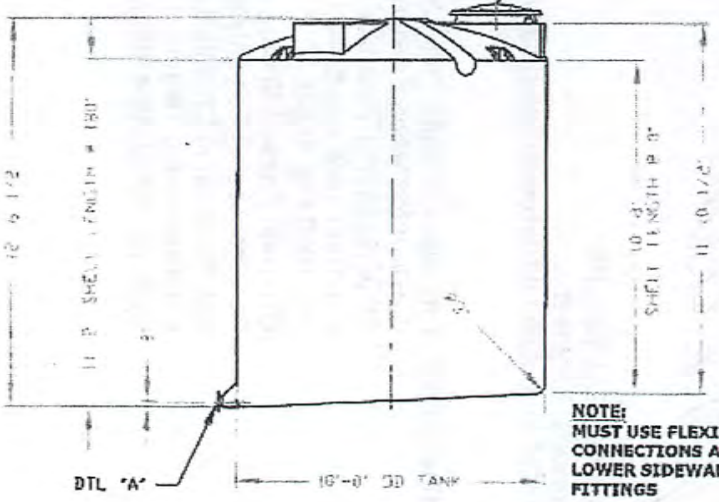

C NOTE:
MUST USE FLEXIBLE CONNECTIONS ALL LOWER SIDEWALL FITTINGS

NOZZLE SCHEDULE & ACCESSORIES

SERVICE	MK	STOCK NO.	SIZE	FITTING	DEG	ELEV

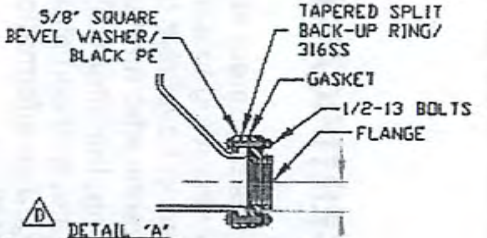

D DETAIL "A"
(INTEGRALLY MOLDED FLANGED OUTLET)
AVAILABLE IN 4" SIZE ONLY
SCALE: NONE

NOTES
1. THIS IS A COMPUTER GENERATED DWG. DO NOT REVISE BY HAND.
2. DIMENSIONS WILL VARY ±3% DUE TO VARIATIONS IN MULTIPLE MOLDS & CONDITIONS PREVALENT DURING MANUFACTURE & USAGE.
3. NO MOLDED IN GALLONAGE MARKERS THIS TANK.

CALCULATED CAPACITIES/ VOLUME IN U.S. GALLONS		
DESIGN CAP	DOME VOL	TOTAL VOL
6283	470	6753

CONFIDENTIAL PROPERTY OF POLY PROCESSING COMPANY NOT FOR REPRINT OR USE WITHOUT PERMISSION

DWG TITLE: 6250 GALLON SLOPE BOTTOM IMFO TANK

SCALE: 1/4"=1'-0"
DATE: 3/17/00
POLYPROCESSING COMPANY
Western Region
DR: MB WILKERSON
CK: D. RECTOR
SHEET 1 OF 1
COMPUTER FILE 11206
REV E

REV "E" REVISED FOR MOLD MODIFICATIONS BY:JB 6/16/053 CK:WM
REV "D" REVISED IMFO STYLE BY:JB 4/30/03 CK:WM
REV "C" ADDED FITTING NOTE BY:JB 3/3/02 CK:MBW
REV "B" REVISED STOCK NUMBER BY:JB 3/3/02 CK:MBW
REV "A" ADDED LIFTING LUGS & DETAIL BY:JB 10/31/02 C

Table I

The following chemicals do not attach or permeate high density crosslinkable polyethylene resins up to 100° F. Each application should be considered individually. All concentrations apply except where noted.

Acetic Acid <1%
Aluminum Salts
Alum
Ammonium Hydroxide
Ammonium Salts
Amyl Alcohol
Antimony Salts
Arsenic Acid
Barium Hydroxide
Benzene Sulfonic Acid <1%
Bismuth Salts
Boric Acid <10%
Bromic Acid <10%
Butanediol
Butyl Alcohol
Calcium Hydroxide
Calcium Salts
Chromic Acid<50%
Citric Acid <1%
Copper Salts
Detergents
Diazo Salts
Diethyl Carbonate
Diethanol Amine
Diethylene Glycol
Diglycolic Acid
Dimethylamine
Dimethyl Formamide

Ethyl Alcohol
Ethylene Glycol
Ferric Salts
Ferrous Salts
Fluoboric Acid <5%
Fluosilicic Acid
Formic Acid <1%
Gallic Acid
Gluconic Acid
Hexanol
Hydrazone<35%
Hydrozine Hydrochloride
Hydriodic Acid
Hydrobromic Acid
Hydrochloric Acid
Hydrofluoric Acid <2%
Hydrofluorosilicic Acid <5%
Hydrogen Peroxide<52%
Hydrogen Phosphide
Hydroquinone
Hypochorous Acid
Iodine Solutions
Lactic Acid
Latex
Lead Acetate
Magnesium Salts
Mercuric Salts
Mercurous Salts

Mercury
Methyl Alcohol
Methylsulfuric Acid
Michel Salts
Nicotinic Acid
Nitric Acid<50%
Oxalic Acid <2%
Perchloric Acid <1%
Phenol<10%
Potassium Hydroxide
Potassium Salts
Phosphoric Acid
Photographic Solutions
Propyl Alcohol
Propylene Glycol
Sea Water
Selenic Acid <1%
Sewage
Silicic Acid
Silver Salts
Soap Solutions
Sodium Ferricyanide
Sodium Ferrocyanide
Sodium Hydroxide
[1]Sodium Hypochlorite<9%
Sodium Salts
Sodium Sulfonates
Stanic Salts

Stannous Salts
Starch Solutions
Stearic Acid
[1]Sulfuric Acid <80%
Sulfurous Acid
Sugar Solution
- Glucose
- Lactose
- Sucrose, etc.

Tannic Acid
Tanning Extracts
Tartaric Acid
Titinium Acid
Toluene Sulfonic Acid
Triethanolamine
Urea
Vinegar
Wetting Agents
Zinc Salts

[1]Concentrations above stated percentage require special considerations, contact factory for guidelines concerning these applications.

Table II

The following oils and organic chemicals do not attack HDXLPE resins. They will be absorbed into the wall of the tank; however, there should be no loss of chemical. Because of this absorption, no chemical other than the original should be stored in the tank as long as contamination may result as the absorbed oil is leached out. Storage at temperatures up to 100° F are possible provided the effects of the absorption on the properties of the tank are not prohibitive.

Fatty Acids	Mineral Oils	Animal Fats	Vegetable Oil
Butyric	Lube	Lard	Corn
Lauric	Transformer	Fish Oil	Coconut
Linoleic	Hydraulic	Musk Oil	Cottonseed
Oleic		Whale Oil	Olive
Palmitic			Peanut
Stearic			

Table III

The following organic chemicals do not attack high density crosslinkable polyethylene resins. They will be absorbed into the wall of tank and a permeation loss will occur. Because of this permeation and the effect it has on the physical properties of the tank, it is generally not recommended that these chemicals be storage at room temperatures above 100° F. However, their use largely depends on such factors as size of tank, its location, toxicity of the chemical, and applicable codes such as NFPA, OSHA, etc.

Aniline
Benzene
Carbon Tetrachloride
Chlorabenzene
Cyclohexanol
Cycolchexnone
Dibutylphthalate
Diesel Fuel
Dimethylamine
Ethyl Butyrate
Ethylene Chlorohydin
Fuel Oil
Furfural
Aliphatic Hydrocarbons (hexane, octane, hexene, octene, etc.)
Jet Fuel
Gasoline
Nitrobenzene
Octyl Cresol
Propylene Dichloride
Toluene
Xylene

This document reports accurate and reliable information to the best of our knowledge, but our suggestions and recommendations cannot be guaranteed because the conditions of use are beyond our control. Information presented herein is given without reference to any patent questions which may be encountered in use thereof. Such questions should be investigated by those using this information. Poly Processing Company assumes no responsibility for the use of information presented herein and hereby disclaims all liability in regard to such use.

POLYPROCESSING COMPANY

Providing Solutions Through Innovation

Chemical Resistance

Chemical Resistance

Chemical "resistance" and "compatibility" are synonymous terms used in relation to the ability of a plastic to function in different environments. In regards to polyethylene chemical storage tanks, chemical resistance encompasses the total effect a product would have on a tank. The factors that make up the overall compatibility of a chemical to a rotomolded tank are (1) chemical attack, (2) absorption or permeation, and (3) solubility and stress crack resistance.

Chemical Attack

By definition, chemical attack involves an actual chemical reaction with the plastic. This can be a breaking of molecular chains and/or an addition of chemical groups to the molecule. For example, in the case of an oxidation reaction with polyethylene, both occur with the addition of carbonyl groups. This causes and eventual loss of properties to the point that a tank would not be serviceable.

Polyethylene in general is one of the most inert plastics available. Very few chemicals react with polyethylene and with those that do, the rate is relatively slow. The ultra high molecular weight characteristics of high density crosslinked polyethylene resins after crosslinking makes these particular polyethylenes even more resistant than other grades.

Permeation

This involves the physical absorption of the chemical into the polyethylene. If this is a volatile chemical, then an actual loss of the product can occur as the chemical vaporizes from the outer wall of the tank. The amount of absorption is generally limited to 3 to 7 percent by weight of the polyethylene. Also, the loss of volatile products is relatively small. For example, a 25-gallon tank with a 50-mil wall will only lose between 5 and 6 grams of gasoline per day due to permeation. The thicker the wall, the lower the rate of loss.

The absorption of a product into the wall of a tank will cause more property changes. The tensile strength is reduced approximately 15 to 20 percent and stiffness approximately 20 percent. Normally, this does not affect the utility of a tank or prohibit the application. The property losses due to permeation are offset by increasing the design wall thickness of the tank.

Elevated Temperature

The effects of elevated temperature (100° F or greater) on polyethylene tank are predictable and expected. Polyethylene, which is a flexible material, becomes even more flexible when heated. It will, therefore, bulge more at an elevated temperature than at room temperature.

By looking at the design hoop stress values for various temperatures, one can see the effects of increased temperature services. The values remain relatively constant up to 100° F, after which they begin to decrease.

100° F	600 psi	130° F	450 psi
110° F	550 psi	140° F	400 psi
120° F	500 psi	150° F	300 psi

A rise in temperature of 50° F (100° F to 150° F) reduces the design hoop stress value from 600 psi to 300 psi and doubles the required wall thickness. It follows that simply increasing the service rating of a tank from 1.35 S.G. to 1.65 S.G., or even to 1.90 S.G. is not necessarily sufficient. The proper wall thickness must be calculated for the temperature of service.

The maximum temperature rating for crosslinked polyethylene material is 150° F. Above that temperature the thermal stabilizers in the plastic are more rapidly consumed. Continued use will cause embrittlement and a reduction in the useful life of the part. Temperature services from 100° F to 150° F are acceptable applications, however, thicker tank walls are required to maintain a safe design. Consult the factory when application such as these arise.

Authorized Distributor:

Toll-Free 1-866-590-6845

www.polyprocessing.com

Table I

The following chemicals do not attach or permeate high density crosslinkable polyethylene resins up to 100° F. Each application should be considered individually. All concentrations apply except where noted.

Acetic Acid
Aluminum Salts
Alum
Ammonium Hydroxide
Ammonium Salts
Amyl Alcohol
Antimony Salts
Arsenic Acid
Barium Hydroxide
Benzene Sulfonic Acid
Bismuth Salts
Boric Acid
Bromic Acid
Butanediol
Butyl Alcohol
Calcium Hydroxide
Calcium Salts
Chromic Acid<50%
Citric Acid
Copper Salts
Detergents
Diazo Salts
Diethyl Carbonate
Diethanol Amine
Diethylene Glycol
Diglycolic Acid
Dimethylamine
Dimethyl Formamide
Ethyl Alcohol
Ethylene Glycol
Ferric Salts
Ferrous Salts
Fluoboric Acid
Fluosilicic Acid
Formic Acid
Gallic Acid
Gluconic Acid
Hexanol
Hydrazone<35%
Hydrozine Hydrochloride
Hydriodic Acid
Hydrobromic Acid
Hydrochloric Acid
Hydrofluoric Acid
Hydrofluorosilicic Acid
Hydrogen Peroxide<52%
Hydrogen Phosphide
Hydroquinone
Hypochorous Acid
Iodine Solutions
Lactic Acid
Latex
Lead Acetate
Magnesium Salts
Mercuric Salts
Mercurous Salts
Mercury
Methyl Alcohol
Methylsulfuric Acid
Michel Salts
Nicotinic Acid
Nitric Acid<50%
Oxalic Acid
Perchloric Acid
Phenol<10%
Potassium Hydroxide
Potassium Salts
Phosphoric Acid
Photographic Solutions
Propyl Alcohol
Propylene Glycol
Sea Water
Selenic Acid
Sewage
Silicic Acid
Silver Salts
Soap Solutions
Sodium Ferricyanide
Sodium Ferrocyanide
Sodium Hydroxide
[1]Sodium Hypochlorite<9%
Sodium Salts
Sodium Sulfonates
Stanic Salts
Stannous Salts
Starch Solutions
Stearic Acid
[1]Sulfuric Acid <80%
Sulfurous Acid
Sugar Solution
Glucose
Lactose
Sucrose, etc.
Tannic Acid
Tanning Extracts
Tartaric Acid
Titinium Acid
Toluene Sulfonic Acid
Triethanolamine
Urea
Vinegar
Wetting Agents
Zinc Salts

[1]Concentrations above stated percentage require special considerations, contact factory for guidelines concerning these applications.

Table II

The following oils and organic chemicals do not attack HDXLPE resins. They will be absorbed into the wall of the tank; however, there should be no loss of chemical. Because of this absorption, no chemical other than the original should be stored in the tank as long as contamination may result as the absorbed oil is leached out. Storage at temperatures up to 100° F are possible provided the effects of the absorption on the properties of the tank are not prohibitive.

Fatty Acids	**Mineral Oils**	**Animal Fats**	**Vegetable Oil**
Butyric	Lube	Lard	Corn
Lauric	Transformer	Fish Oil	Coconut
Linoleic	Hydraulic	Musk Oil	Cottonseed
Oleic		Whale Oil	Olive
Palmitic			Peanut
Stearic			

Table III

The following organic chemicals do not attack high density crosslinkable polyethylene resins. They will be absorbed into the wall of tank and a permeation loss will occur. Because of this permeation and the effect it has on the physical properties of the tank, it is generally not recommended that these chemicals be storage at room temperatures above 100° F. However, their use largely depends on such factors as size of tank, its location, toxicity of the chemical, and applicable codes such as NFPA, OSHA, etc.

Anitine
Benzene
Carbon Tetrachloride
Chlorabenzene
Cychohexanol
Cycolohexnone
Dibutylphthalate
Diesel Fuel
Dimethylamine
Ethyl Butyrate
Ethylene Chlorohydin
Fuel Oil
Fufural
Aliphatic Hydrocarbons (hexane, octane, hexene, octene, etc.)
Jet Fuel
Gasoline
Nitrobenzene
Octyl Cresol
Propylene Dichloride
Toluene
Xylene

This document reports accurate and reliable information to the best of our knowledge, but our suggestions and recommendations cannot be guaranteed because the conditions of use are beyond our control. Information presented herein is given without reference to any patent questions which may be encountered in use thereof. Such questions should be investigated by those using this information. Poly Processing Company assumes no responsibility for the use of information presented herein and hereby disclaims all liability in regard to such use.

OR-1000™ Tank Systems!

Specify Peace of Mind!

NSF/ANSI 61

- **OR-1000™ Engineered System**
- **4 Times Antioxidants**
- **Certified for 31+ Hazardous and Corrosive Chemical Applications**
- **Design Temperatures to 140°F**
- **Complies with State Regulations**

Provide Longer Tank Life with an IMFO®/OR-1000™ System!

Increase Tank Longevity!

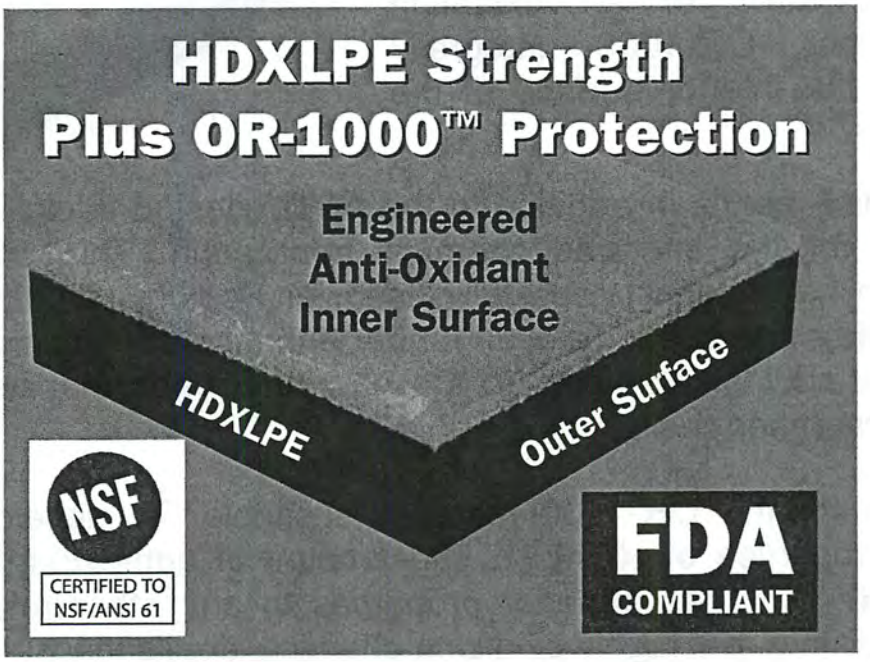

- Proven System since 1995
- Increased Chemical Resistance
- Complete Drain
- Maintenance Free
- Avoids Confined-Space Entry
- 4x Anti-Oxidant Package
- Sodium Hypochlorite/Sulfuric Acid/ Hydrochloric Acid applications*

*See warranty information on page 26

POLYPROCESSING COMPANY
Providing Solutions Through Innovation

Storage Solution: OR-1000 Liner

Poly Processing Company is the only rotational molding company with the ability to provide the strength, durability and safety of HDXLPE with the added value of an oxidation resistant liner, OR-1000, integrally molded as the interior surface of the part.

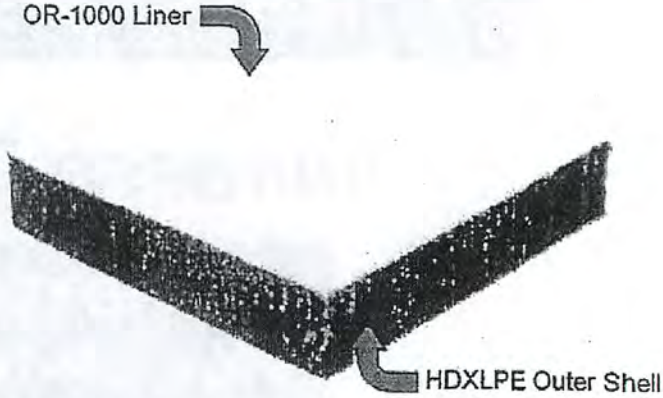

The liner thickness is in addition to the ASTM design thickness of the HDXLPE outer shell for the intended chemical application. This crosslink / OR-1000 combination has been successfully used for Sodium Hypochlorite and Sulfuric Acid services since 1995. To even further enhance the value of this combination, we are now adding this lining to the new high performance Metallocene High Density Crosslinked resin.

The reason for the OR-1000 material is simple. To develop the outstanding long-term properties of HDXLPE, the amount of anti-oxidants must be limited. Although HDXLPE has superior properties to any other rotational mold grade polyethylene, in a few highly oxidizing chemical applications, its optimum service life has not been obtained. To capitalize on the superior properties and performance characteristics of HDXLPE, the OR-1000 liner was developed to serve as an oxidation barrier to improve service life in oxidizing chemical applications. This combination provides unmatched performance and value to our customers.

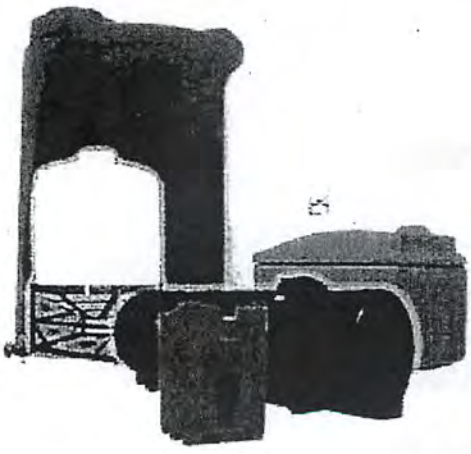

Sodium Hypochlorite and Sulfuric Acid remain very difficult storage and handling applications. However, we continue to bring you the very best in value, service and high performance products -- Poly Processing Company, *providing solutions through innovation.*

CERTIFIED ISO 9001

member

THE CHLORINE INSTITUTE, INC.
member

Authorized Distributor:

1-866-590-6845
www.polyprocessing.com

Rev. 3/2001

POLYPROCESSING COMPANY

Providing Solutions Through Innovation

Polyethylene Tank Life Expectancy

For 35 years, Poly Processing Company has been **Helping Our Customers . . . Solve Problems** associated with storing hazardous chemicals, **Managing Risk** with the Environment and Employee Safety and **Growing Their Profits** with Increased Tank Longevity and Operating Efficiencies. We have specialized in providing hazardous chemical storage solutions to the industrial, water and waste water markets. While we manufacture both linear and crosslink polyethylene storage tanks; in **hazardous chemical environments, crosslink polyethylene** is the material of choice. Our customers report crosslink polyethylene tanks providing service for 10+ years with 15 to 20 years of tank service being common. However; there are many factors and variables that have an effect on the useful life of any tank including polyethylene.

Chemical, Concentration and Temperature: The chemical, concentration and operating temperature are all factors influencing the life expectancy of a polyethylene tank. For example, high concentrations of Sulfuric Acid are stress cracking agents and are more aggressive oxidizers than less concentrated chemicals such as 25% Caustic Soda. For this reason, Poly Processing offers our customers the OR-1000™ Anti-Oxidant Systems. Another example: 12% Sodium Hypochlorite will degrade from UV exposure and elevated temperatures. As it degrades, sediment builds in the bottom of the tank leading to a shorter tank life. To eliminate this sludge buildup, Poly Processing Company offers our customers the IMFO® (Integrally Molded Flanged Outlet). The IMFO® design promotes continuous "system" flushing increasing tank life and operating efficiencies. Poly Processing Company chemical storage tanks are constructed from premium materials and designed specifically for the chemical, concentration and temperature requirements.

Installation and Piping: The single biggest reason for tank life reduction is improper tank installation and **"hard"** piping. Polyethylene's broad spectrum of chemical resistance vs. other materials of construction is based on its ability to expand and contract. Flexible connections compensate for tank expansion and contraction promoting a longer useful life. It is important to follow Poly Processing Company's Installation Manual Instructions during the installation process.

Venting: Often overlooked, venting is a very important step that promotes tank longevity. Polyethylene tanks are rated at atmospheric pressure/vacuum. Adequate vent size is always based on flow and delivery rates so it is important to gather the following information to adequately determine the proper venting requirements:

1) Is the tank to be filled pneumatically?
2) Is the tank to be vented to atmosphere?
3) Does the length of the vent exceed 3 feet (piped to a central vent system)
4) Is a fume scrubbing system to be used?
5) Are vent screens to be used (restricts flow)?
6) Does the tank manufacturer offer a method of "emergency venting" to prevent over-pressurization?

Other Items Effecting Tank Longevity:

1) Continuous cycling (fill / discharge)
2) Excessive agitation
3) Mobile applications

For further information about your specific needs or applications, please contact Poly Processing Company at 1-866-590-6845 or visit our website at www.polyprocessing.com.

POLYPROCESSING
Providing Solutions Through Innovation

Chemical Resistance

Chemical Resistance

Chemical "resistance" and "compatibility" are synonymous terms used in relation to the ability of a plastic to function in different environments. In regards to polyethylene chemical storage tanks, chemical resistance encompasses the total effect a product would have on a tank. The factors that make up the overall compatibility of a chemical to a rotomolded tank are (1) chemical attack, (2) absorption or permeation, and (3) solubility and stress crack resistance.

Chemical Attack

By definition, chemical attack involves an actual chemical reaction with the plastic. This can be a breaking of molecular chains and/or an addition of chemical groups to the molecule. For example, in the case of an oxidation reaction with polyethylene, both occur with the addition of carbonyl groups. This causes and eventual loss of properties to the point that a tank would not be serviceable.

Polyethylene in general is one of the most inert plastics available. Very few chemicals react with polyethylene and with those that do, the rate is relatively slow. The ultra high molecular weight characteristics of high density crosslinked polyethylene resins after crosslinking makes these particular polyethylenes even more resistant than other grades.

Permeation

This involves the physical absorption of the chemical into the polyethylene. If this is a volatile chemical, then an actual loss of the product can occur as the chemical vaporizes from the outer wall of the tank. The amount of absorption is generally limited to 3 to 7 percent by weight of the polyethylene. Also, the loss of volatile products is relatively small. For example, a 25-gallon tank with a 50-mil wall will only lose between 5 and 6 grams of gasoline per day due to permeation. The thicker the wall, the lower the rate of loss.

The absorption of a product into the wall of a tank will cause more property changes. The tensile strength is reduced approximately 15 to 20 percent and stiffness approximately 20 percent. Normally, this does not affect the utility of a tank or prohibit the application. The property losses due to permeation are offset by increasing the design wall thickness of the tank.

Elevated Temperature

The effects of elevated temperature (100° F or greater) on polyethylene tank are predictable and expected. Polyethylene, which is a flexible material, becomes even more flexible when heated. It will, therefore, bulge more at an elevated temperature than at room temperature.

By looking at the design hoop stress values for various temperatures, one can see the effects of increased temperature services. The values remain relatively constant up to 100° F, after which they begin to decrease.

100° F	600 psi	130° F	450 psi
110° F	550 psi	140° F	400 psi
120° F	500 psi	150° F	300 psi

A rise in temperature of 50° F (100° F to 150° F) reduces the design hoop stress value from 600 psi to 300 psi and doubles the required wall thickness. It follows that simply increasing the service rating of a tank from 1.35 S.G. to 1.65 S.G., or even to 1.90 S.G. is not necessarily sufficient. The proper wall thickness must be calculated for the temperature of service.

The maximum temperature rating for crosslinked polyethylene material is 150° F. Above that temperature the thermal stabilizers in the plastic are more rapidly consumed. Continued use will cause embrittlement and a reduction in the useful life of the part. Temperature services from 100° F to 150° F are acceptable applications, however, thicker tank walls are required to maintain a safe design. Consult the factory when application such as these arise.

Authorized Distributor:

Toll-Free 1-866-590-6845
www.polyprocessing.com

Crosslinked Polyethylene with OR-1000™ System
The #1 System for Oxidizing Chemical Environments

Poly Processing Company and other polyethylene tank manufacturers, as well as major polyethylene resin manufacturers have published many documents over the past several years discussing the benefits of certain rotational molding resins in acidic and alkaline chemical environments. The majority of these documents support the use of crosslinked polyethylene over linear polyethylene in acidic and basic chemical environments. These articles speak to the longevity of crosslinked polyethylene rotationally molded tanks, the safety of having polymer chains that are chemically bonded, and the leveraged investment of knowing that crosslinked polyethylene chemical storage tanks have been utilized for the last 35 years.

In 2001, one of the largest resin manufacturers in North America published a fairly extensive study which showed that their linear polyethylene in a lab environment performed as well as, if not better than crosslinked polyethylene, in acidic and alkaline chemical applications. This study, coupled with marketing efforts by linear polyethylene tank manufacturers who do not rotationally mold crosslinked polyethylene tanks in the course of their normal business, has given rise to some industry confusion and misunderstanding about what is the best resin system for storing oxidizing chemicals. We will summarize the facts about rotationally molded polyethylene storage tanks and the value of an engineered antioxidant resin system coupled with the long-term performance of crosslinked polyethylene.

We would first like to discuss the lab study performed by the linear resin manufacturer. The study compared crosslinked polyethylene with linear polyethylene in sulphuric acid and sodium hypochlorite environments. The sulphuric acid was concentrated approximately 93%-97%, and the Sodium Hypochlorite was around 14% concentration. The lab study describes how the crosslinked polyethylene and linear polyethylene were submersed in the chemicals and then tested using ARM Impact testing as well as Environmental Stress Crack Resistivity (ESCR) testing. The study concluded that the linear materials in a chemical resistivity mode held up as well as crosslinked materials in a lab environment. In addition, Higher ESCR properties are found in lower density materials like LLDPE or LDPE as compared to HDPE resins. It doesn't mean you want to use a tank made only from the lower density resins. ESCR shows how well the material performs in a pre-notched condition in the presence of certain chemicals.

The lab study performed by the resin manufacturer did not cover or discuss the long-term properties of these materials in harsh, environmental conditions. Over time, sodium hypochlorite and sulphuric acid create an oxidative environment, which remove hydrogen molecules from the polymer chains creating embrittlement. This phenomenon is inherent to all types of polyethylene, since they are hydrocarbon based molecules. Storing acids and bases in actual everyday environments presents a completely different set of parameters and stresses that have little to do with the lab environment.

Poly Processing Company has been aware of this relationship between ESCR and Chemical resistance for many years and has been an industry leader in creating engineered resin systems which give the end user the ability to have excellent oxidation and chemical resistivity without sacrificing long term performance and toughness. These engineered resin systems deliver peace of mind, a margin of safety, and leveraged investment to the end user.

Another critical factor to consider when storing acids and bases in actual everyday environments is the Long Term Hydrostatic Strength (LTHS) of the polyethylene. LTHS properties are one of the keys to providing the continued strength necessary for tanks during its service life. This property is especially important in field applications where tanks can see elevated temperatures approaching

140°F. LTHS tests are conducted at both ambient temperature (73°F) and at elevated temperature (140°F) since actual field conditions are typically in this range.
Figure 1.

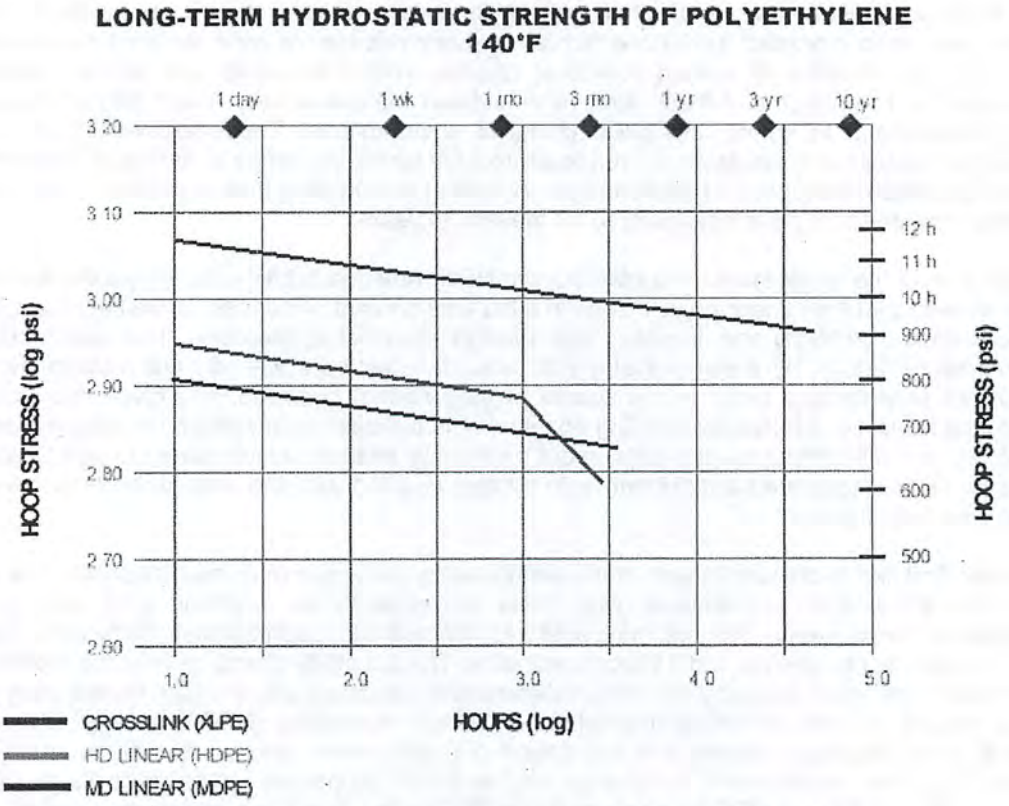

Source: Chevron Phillips Company, Plastics Technical Center

The rapid deterioration in properties is indicated by a "knee" in the curve of hoop strength versus time as illustrated in Figure 1 above. Even high performance HDPE will develop a LTHS knee at around 1000 hours (log 3), and some MDPE products will have a knee in less than 10,000 hours (log 5). This type of performance substantially reduces the expected long-term performance at elevated temperatures. Crosslinked polyethylene has been tested to 50,000 hours at 140°F and shows no signs of a knee.

There is still the need to surround the oxidation resistant material with a robust resin system that will give you longer useful tank life, superior impact resistance, and greater tensile strength for a safer product. That is why crosslinked polyethylene is still the material of choice for industrial and municipal chemical applications.

Poly Processing Company has been the leader in rotationally molded crosslinked polyethylene storage tanks for 35 years. We work with the leading universities in the country to develop engineered resin systems that will perform above and beyond any standard "off the shelf" polyethylene in harsh, oxidizing environments. One of the systems we developed is the OR-1000™ system. This system uses the best linear resin for chemical resistivity combined with four (4) times the antioxidant power and a crosslink outer wall for maximum long-term performance and durability.

Poly Processing Company developed the OR-1000™ oxidation resistance system in 1995. This lower density linear material serves to increase the service life of crosslinked polyethylene tanks in oxidizing chemical service (Sodium Hypochlorite, Sulphuric Acid, Hydrochloric Acid, and Nitric Acid). To develop the outstanding long-term physical properties of crosslinked polyethylene, the amount of antioxidant compounded into the material has to be limited. Although crosslinked polyethylene has superior properties to any other rotational molding grade polyethylene, the tank's useful service life will be reduced without the OR-1000™ system. In order to utilize the superior properties of crosslinked polyethylene, the OR-1000™ system was developed to greatly improve the service life in harsh oxidizing chemical environments. This material is a medium density linear based resin with a large amount of antioxidant added to it for the best oxidizing resistance system in the industry. The OR-1000™ system has been engineered to prevent de-lamination during the useful life of the tank.

To compare the effect of oxidizing chemicals on the OR-1000™ system and crosslinked polyethylene, 1/8" thick tensile bars of both OR-1000™ and crosslinked polyethylene were submerged in a manufacturer's storage tank. This tank handled a highly oxidizing chemical, 17% Sodium Hypochlorite, and was emptied and filled at least once a day. Every 30 days, samples were pulled and tensile and percent elongation was determined as well as ESCR tests. Oxidization or reduction in physical properties is indicated by reduced in elongation. After six months of testing, the elongation of the crosslinked polyethylene tensile bars had decreased 26% while OR-1000™ elongation had no change. This is due to the added antioxidant in the OR-1000™ system as well as the fact that the linear material used in the testing was a lower density material than the crosslinked material.

Crosslinked polyethylene provides superior environmental stress cracking resistance (ESCR) or sometimes generally referred to as resistance to slow crack growth (SCG) in almost all chemical applications. Two tests which clearly show this difference are the bent strip ESCR (ASTM D1693) with 10% Igepal where crosslink polyethylene does not fail in over 1000 hours compared to typical values for LMDPE of <400 hours. Another test which shows the slow crack growth difference with no surfactant (in air) is the polyethylene notch test (PENT) described in ASTM F 1473 and crosslink polyethylene again does not fail in over 1000 hours and LMDPE grades fail in <100 hours. Even though linear polyethylene grades with improved ESCR have become available over the past 10 to 15 years, they still do not match crosslinked polyethylene in SCG performance. Slow crack growth resistance as was shown earlier in this paper is an important property that can affect the long-term performance of tanks.

The best of both worlds is having the OR-1000™ system for the long-term oxidative resistivity characteristics (as discussed in the resin manufacturer's lab study), with the robustness of crosslinked polyethylene for the long-term durability and long useful life that is expected of industrial grade chemical storage tanks. This is why so many chemical manufacturers and distributors choose Poly Processing Company for engineered chemical storage solutions.

Crosslinked polyethylene tanks with the OR-1000™ system varying in sizes from 500 gallons to 14,950 gallons have been in true industrial and municipal use for over 10 years with excellent results. Poly Processing Company backs every crosslinked polyethylene tank with the OR-1000™ system with a 5 year full warranty on all suitable applications including sodium hypochlorite and hydrochloric acid, sulfuric acid 80%-98% carries a full 3 year warranty

Store your harsh oxidizing chemicals with the confidence and peace of mind that you deserve. Specify Poly Processing Company's crosslinked polyethylene tanks with the OR-1000™ system for longevity, safety, and leveraged investment. Please consult your distributor or Poly Processing Company at 1-866-590-6845 for your specific requirements.

tobeywade
STRUCTURAL ENGINEERS

May 6, 2010
Project No. R115-07-08

Mr. Aubry Burgess, Maintenance Supervisor
PHILIP SERVICES CORPORATION
ENVIRONMENTAL SERVICES DIVISION
2095 Newlands Drive East
Fernley, NV 89408

RE: TANK 206 CERTIFICATION REPORT

Dear Mr. Burgess:

In accordance with the Fernley Facility Amended Tank Replacement plan as prepared by Philip Services Corporation (PSC) and dated March 25, 2008, each tank is required to be certified by Independent Registered Professional Engineers (IRPE's) prior to being placed into service. This report has been prepared to document the evaluations as performed by Tobey-Wade Consulting.

Background

Tank 206 is a Crosslinked Polyethethylene Tank with a 6,250 gallon capacity as manufactured by Poly Processing Company. Poly Processing has provided data relative to the tank's strength and its chemical resistance capabilities. Poly Processing has also provided an opinion as to any offsets observed in the tank shell.

Schiff Associates has evaluated the tank's suitability and compatibility for its proposed use in PSC's facility. Their conclusions have been provided under separate cover to PSC.

Findings

Based on our research, analysis and structural observations, the following systems are in compliance with the Amended Tank Replacement plan:

- Tank 206 is situated on a reinforced concrete foundation system which is capable of adequately supporting the tank and its contents under static and dynamic conditions.
- Tank 206 is located in an area with sufficient secondary containment as required by 40 CFR Ch. I, 264.193.
- Tank 206 is stabile against overturning when subjected to loads based on 2006 International Building Code level seismic events.

NEVADA OFFICE
329 FLINT STREET ■ RENO, NEVADA 89501 ■ TEL: (775) 324.7757 ■ FAX: (775) 324.7797

- Tank 206 is anchored to prevent sliding when subjected to loads based on 2006 International Building Code (IBC) level seismic events. Structural Observation and Special Inspection of the anchorage system has been performed as required by the IBC. The Structural Observation and Special Inspection reports are attached.

- Tank 206 has been tested for leakage and found to be watertight. The Tank Leakage Test report is attached.

- The exterior of Tank 206's shell wall has been inspected and found to be generally undamaged. The Tank Shell Inspection report is attached.

Structural Observation, tank leakage inspections and tank shell inspections were performed by Tobey-Wade Consulting under my direct supervision. Special Inspections were performed by ICC-certified inspectors from Black Eagle Consulting based on anchorage requirements provided by Tobey-Wade Consulting.

Certification Statement

I certify under penalty of law that this report and all attachments were prepared under my direction and supervision in accordance with a system developed to assure that qualified personnel properly gather and evaluate the information submitted. Based on my inquiry of the person or persons who manage the system or those persons directly responsible for gathering the information, the information, submitted is, to the best of my knowledge and belief, true, accurate, and complete. I am aware that there are significant penalties for submitting false information, including the possibility of fines and imprisonment for knowing violations.

This report has been prepared in accordance with acceptable engineering practices and is subject to the assumptions and limitations stated in the report. Also note that this certification covers the aforementioned aspects of Tank 206 only.

Please feel free to contact me at your convenience should you have any questions relating to our findings.

Sincerely,
TOBEY-WADE CONSULTING

Terrence R. Tobey

Terrence R. Tobey, S.E.
Principal Structural Engineer

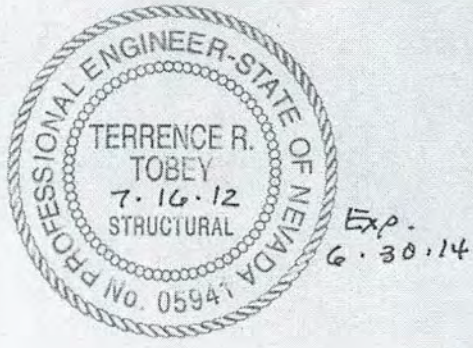

NON-CONTROLLED COPY
INFORMATION SUBJECT TO CHANGE WITHOUT NOTICE
VERIFY REV LEVEL OF PAPER COPY WITH REV LEVEL ON PPC WEB SITE

Proposed Storage Tank

NOZZLE SCHEDULE & ACCESSORIES						
SERVICE	MK	STOCK NO.	SIZE	FITTING	DEG	ELEV

A MOLDED-IN LIFTING LUG PAIRS (4) PLACES
USE MINIMUM OF (1) LUG AT EACH LOCATION FOR LIFTING (SEE DETAIL)

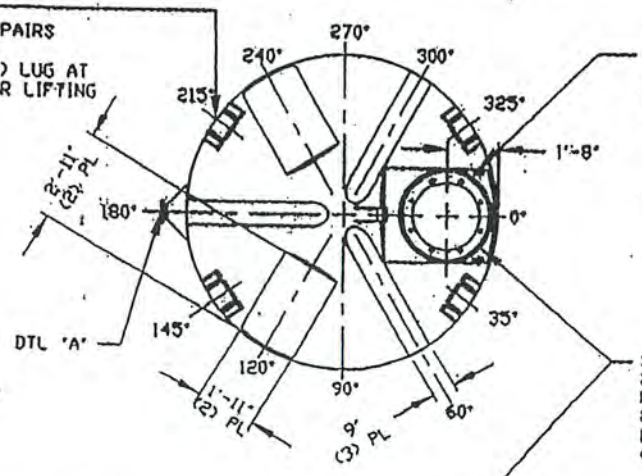

MOLDED-IN LADDER ATTACHMENT LUG TYP (2) PLACES

DTL "A"

STANDARD COVER:
24"/(8) BOLT MANWAY COVER/PE (SHOWN)
PPC STOCK NO. 3218 OR
24"/STRAPPED MANWAY COVER/PE B
PPC STOCK NO. 3217
(OPTIONAL 24" COVERS AVAILABLE)

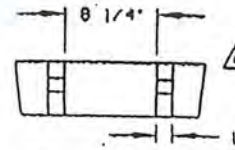

LIFTING LUG DETAIL
(4) PLACES
SCALE: 1"=1'-0"

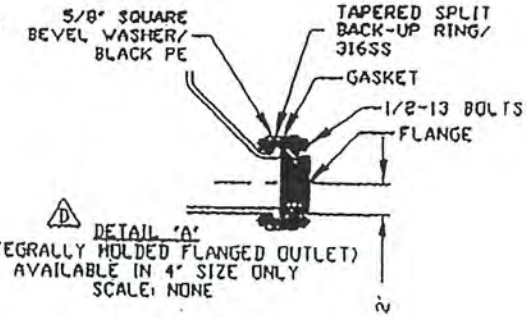

D DETAIL "A"
(INTEGRALLY MOLDED FLANGED OUTLET)
AVAILABLE IN 4" SIZE ONLY
SCALE: NONE

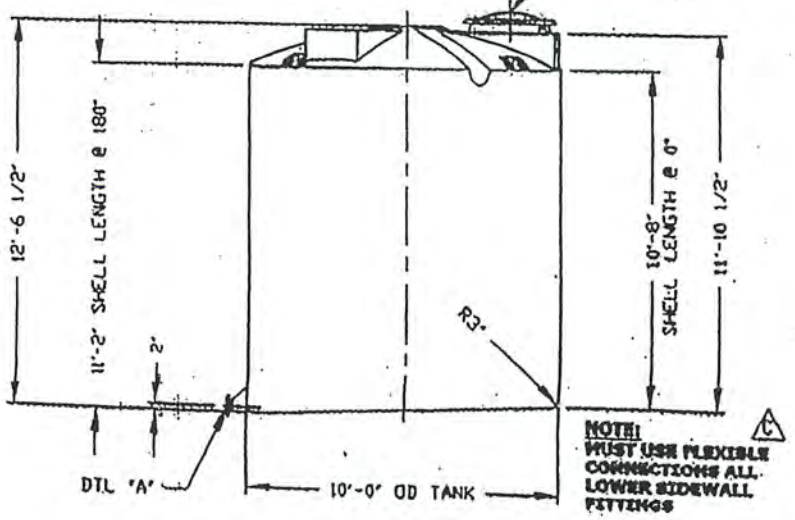

C NOTE: MUST USE FLEXIBLE CONNECTIONS ALL LOWER SIDEWALL FITTINGS

NOTES:
1. THIS IS A COMPUTER GENERATED .DWG. DO NOT REVISE BY HAND.
2. DIMENSIONS WILL VARY ±3% DUE TO VARIATIONS IN MULTIPLE MOLDS & CONDITIONS PREVALENT DURING MANUFACTURE & USAGE.
3. NO MOLDED IN GALLONAGE MARKERS THIS TANK.

CALCULATED CAPACITIES/ VOLUME IN U.S. GALLONS		
DESIGN CAP	DOME VOL	TOTAL VOL
6283	470	6753

CONFIDENTIAL PROPERTY OF POLY PROCESSING COMPANY NOT FOR REPRINT OR USE WITHOUT PERMISSION

DWG TITLE: 6250 GALLON SLOPE BOTTOM IMFO TANK

SCALE: 1/4"=1'-0"
DATE: 3/17/00
POLYPROCESSING COMPANY — Western Region
BY: HB WILKERSON
CK: D. 'OR
SHEET: 1 OF 1
COMPUTER #: 11206250
REV: E

REV "E" REVISED FOR MOLD MODIFICATIONS BY:JB 6/16/03 CK:VH
REV "D" REVISED INFO STYLE BY:JB 4/30/03 CK:VH
REV "C" ADDED FITTING NOTE BY:JB 3/3/02 CK:HBW
REV "B" REVISED STOCK NUMBER BY:JB 3/3/02 CK:HBW
REV "A" ADDED LIFTING LUGS & DETAIL BY:JB 10/31/02 CK:VH

ADDITION DATE 10/09/09
REVISION NUMBER 1

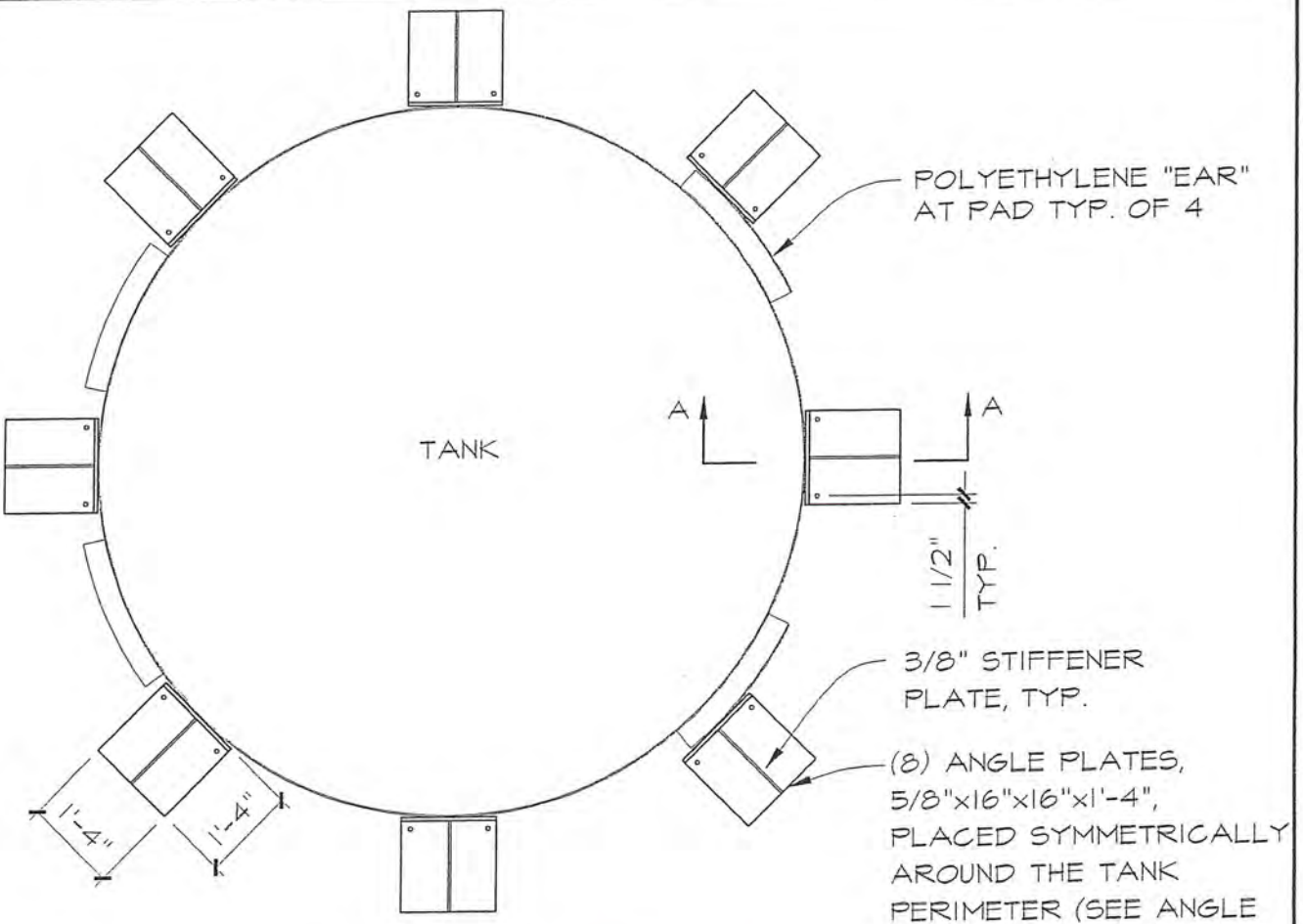

TANK NO's 201 - 208
CYLINDRICAL FLAT BOTTOM TANK

SCALE: 3/8"=1'-0"

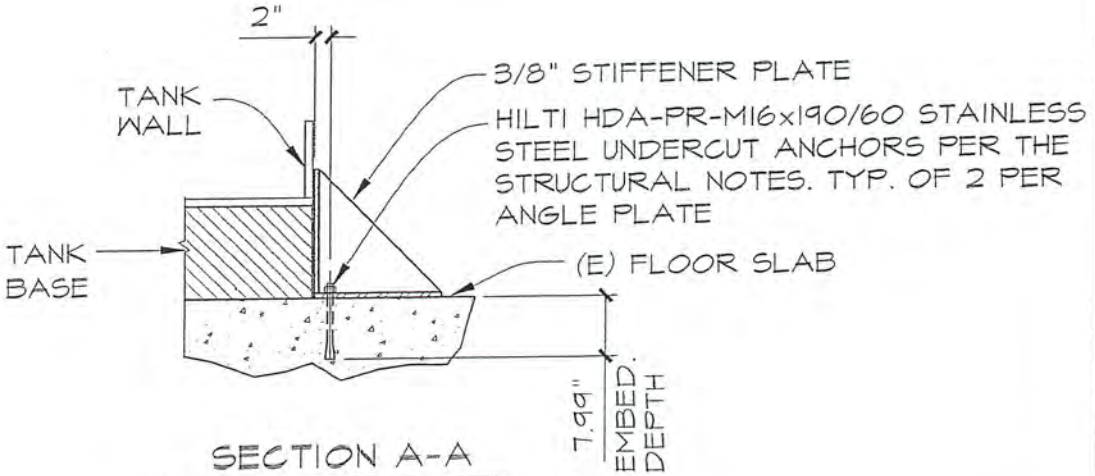

SECTION A-A

N.T.S.

tobey wade
CONSULTING
329 Flint Street
Reno, Nevada 89501
Tel. (775) 324-7757 Fax (775) 324-7797

PHILIP SERVICES CORPORATION
FERNLEY FACILITY
TANK NO's 201-208
ANCHORAGE DETAILS
FERNLEY, NEVADA

Project No.
R115-07-08

ADDITION DATE 10/09/09
Date: OCT. 5, 2009

REVISION NUMBER 1

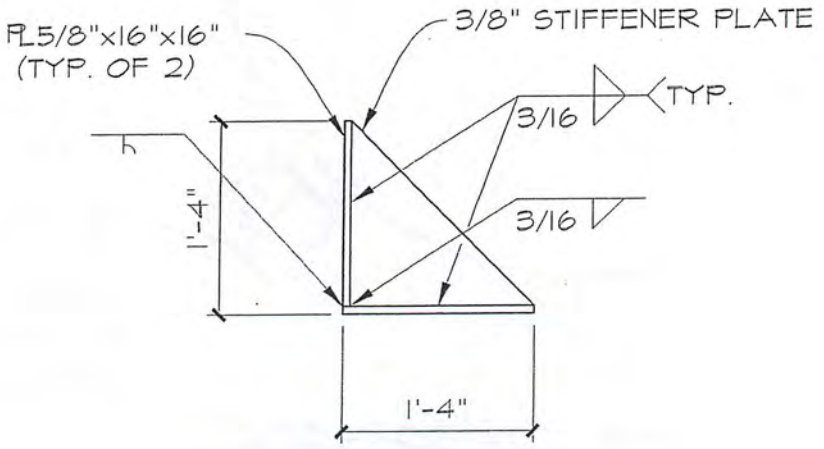

ANGLE PLATE DETAIL

SCALE: 3/4"=1'-0"

tobey wade
CONSULTING
329 Flint Street
Reno, Nevada 89501
Tel. (775) 324-7757 Fax (775) 324-7797

PHILIP SERVICES CORPORATION
FERNLEY FACILITY
TANK NO's 201-208
ANCHORAGE DETAILS
FERNLEY, NEVADA

Project No.
R115-07-08

ADDITION DATE 10/09/09
Date: OCT. 5, 2009

REVISION NUMBER 1

ALKALINE STORAGE TANKS

TANK DATA SHEET

RCRA-Regulated? **YES**

Tank Location: **Tank Storage Bay - Alkaline Area**

Tank Name: **Waste Alkaline Storage**

Tank Numbers: **#207 - #208**

Process Description: **Alkaline Storage**

Vessel Fluid: **Waste Alkaline liquid Mixtures**

Specific Gravity **≤ 1.90**

Freeboard At Working Vol (ft): **6" + dome top**

Normal Operating Pressure (psig): **Atmospheric**

Temperature (°F): **Ambient**

	Material	Thickness	Type
Bottom	**Cross-link Polyethylene**	**5/8" nominal**	**Flat, Sloped**
Shell	**Cross-link Polyethylene**	**Varies .40" - .90" top to bottom**	**Cylindrical**
Top	**Cross-link Polyethylene**	**Design Avg. .40"**	**Domed Roof**

Working Volume (USG): **6000**

Insulation: **None**

Nominal Volume (USG): **6280**

Method of Construction: **Rotationally Molded**

Tank O.D. (ft): **10' - 0"**

Tank Height or Length (ft): **12' – 6 1/2"**

Design Code Used: **ASTM D1998**

Date in Service: **2009**

Anchorage: **Seismic restraints bolted to concrete. Anchorage designs per 2006 IBC.**

Connections

Item No.	Size (In.)	Gasket	Description
1	**24"**		**Roof manway / E-vent**
2	**4"**		**Vent fitting to Scrubber**
3	**3"**		**Tank Fill fitting**
4	**2"**		**Level Sensor connection**
5	**4"**		**Flange Drain fitting**
6			**Lifting Lugs**
7			
8			
9			
10			
11			
12			
13			
14			
15			

Tank Sketch

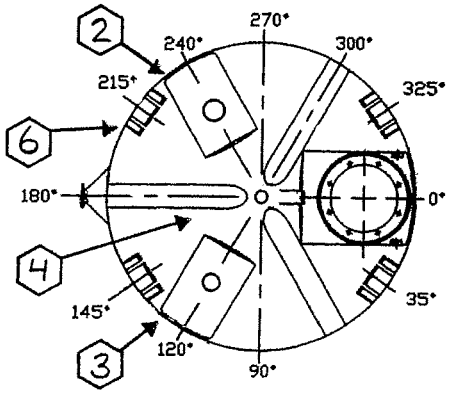

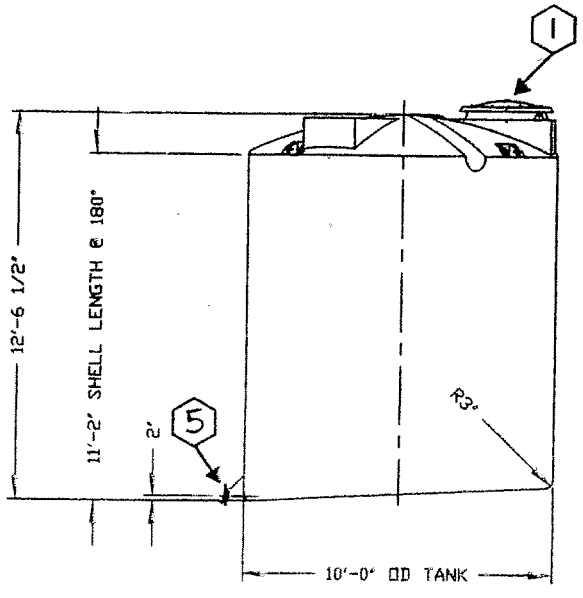

Tank Mfgr: **Poly Processing Co.**

Remarks: **Poly Processing stock #1206250. Tank manufactured of hi-density cross-linked rotationally molded polyethylene with "Extra heavy wall thickness" for 1.9 sp. gr. service. Tank includes OR-1000 oxidation resistant liner.**

SCHIFF ASSOCIATES
FIFTY YEARS OF PROFESSIONALISM

gbell@schiffassociates.com

www.schiffassociates.com
Consulting Corrosion Engineers – Since 1959

October 6, 2009 via email to: Burgess, Aubry [ABurgess@pscnow.com]

PSC ENVIRONMENTAL SERVICES
2095 Newlands Drive E
Fernley, NV 89408

Attention: Mr. Aubry Burgess
Maintenance Supervisor

Re: **Material Compatibility/Corrosion Certification Letter for PLANNED Tank 207 for Cyanide/Alkaline Storage Tanks**
Amended Tank Replacement Plan
Fernley, NV
SA#08-1383LGL

Dear Mr. Burgess:

We have conducted the following investigations and research relative to the suitability and compatibility of the 6,250 Gallon sloped bottom High Density Polyethylene (HDPE) tanks fabricated by PolyProcessing with OR-1000™ lining system for cyanide/alkaline storage at ambient temperatures:

1) Reviewed PolyProcessing Company's product information provided on tank design and compatibility.

2) Conducted independent research on compatibility of high density cross-linked rotationally molded polyethylene for service at ambient temperature.

3) Visited the PSC facility in Fernley in December 2008 and March 2009 to understand the anticipated process flow and conditions of waste streams at the site.

4) Reviewed supplemental information requested from PolyProcessing Company regarding issues identified during site visit.

The tank design is suitable for cyanide/alkaline storage at ambient temperatures per the manufacturer's information in the position as Tank 207 in the waste processing stream of the PSC Facility as configured and intended per the Amended Tank Replacement Program outlined in the letter from Thomas Nelson of PSC to Nevada Division of Environmental Protection dated March 25, 2008.

REVISION DATE 10/09/09
REVISION NUMBER 1

CERTIFICATION

I certify under penalty of law that this document and all attachments were prepared under my direction or supervision according to a system designed to assure that qualified personnel properly gather and evaluate the information submitted. Based on my inquiry of the person or persons who manage the system, or those persons directly for gathering the information, the information submitted is, to the best of my knowledge and belief, true, accurate, and complete. I am aware that there are significant penalties for submitting false information, including the possibility of fine and imprisonment for knowing violations.

CLOSURE

Our services have been performed with the usual thoroughness and competence of the engineering profession. No other warranty or representation, either expressed or implied, is included or intended.

Sincerely,
SCHIFF ASSOCIATES

GRAHAM E.C. BELL
EXP. 12-31-10
MECHANICAL

Graham E.C. Bell, PE
Principal Engineer
NACE International Corrosion Specialist #5350

Attachments: Proposed Storage Tank Drawing
Waste Information Provided by PSC on PolyProcessing Data Sheet
PolyProcessing Technical Bulletin, Chemical Resistance Technical Information
OR-1000 Tank Cut Sheet
OR-1000 Cut Sheet
OR-1000 Product Sheet
PolyProcessing Polyethylene Tank Life Expectancy
PolyProcessing Chemical Compatibility Data including Temperature Dependence
PolyProcessing Technical Bulletin, Crosslinked Polyethylene with OR-1000™ System, Dated June 2005, Rev. A

ADDITION DATE 10/09/09
REVISION NUMBER 1

NON-CONTROLLED COPY
INFORMATION SUBJECT TO CHANGE WITHOUT NOTICE
VERIFY REV LEVEL OF PAPER COPY WITH REV LEVEL ON PPC WEB SITE

Proposed Storage Tank

NOZZLE SCHEDULE & ACCESSORIES						
SERVICE	MK	STOCK NO	SIZE	FITTING	DEG	ELEV

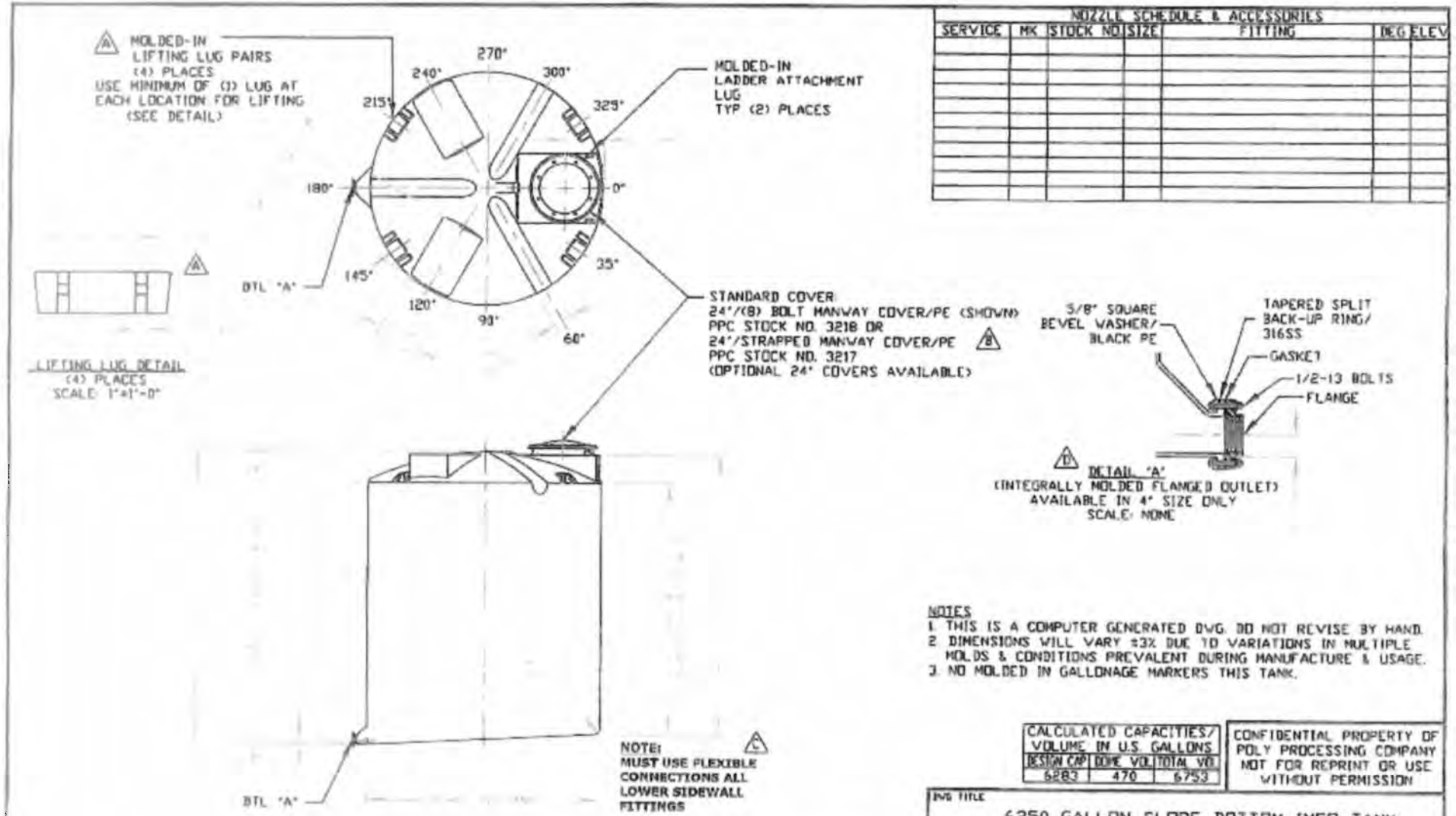

NOTES
1. THIS IS A COMPUTER GENERATED DWG. DO NOT REVISE BY HAND.
2. DIMENSIONS WILL VARY ±3% DUE TO VARIATIONS IN MULTIPLE MOLDS & CONDITIONS PREVALENT DURING MANUFACTURE & USAGE.
3. NO MOLDED IN GALLONAGE MARKERS THIS TANK.

CALCULATED CAPACITIES/ VOLUME IN U.S. GALLONS		
DESIGN CAP	DOME VOL	TOTAL VOL
6283	470	6753

CONFIDENTIAL PROPERTY OF POLY PROCESSING COMPANY NOT FOR REPRINT OR USE WITHOUT PERMISSION

DWG TITLE: 6250 GALLON SLOPE BOTTOM IMFO TANK

SCALE: 1/4"=1'-0"
DATE: 3/17/00
POLY PROCESSING COMPANY
Western Region
DR: MB WILKERSON
CH: D. RECTOR
SHEET: 1 OF 1
COMPUTER FILE: 11206250
REV: E

REVISION HISTORY
REV "E" REVISED FOR MOLD MODIFICATIONS BY:JB 6/16/053 CK:WH
REV "D" REVISED IMFO STYLE BY:JB 4/30/03 CK:WH
REV "C" ADDED FITTING NOTE BY:JB 3/3/02 CK:MBW
REV "B" REVISED STOCK NUMBER BY:JB 3/3/02 CK:MBW
REV "A" ADDED LIFTING LUGS & DETAIL BY:JB 10/31/02 CK:WH

Table I

The following chemicals do not attach or permeate high density crosslinkable polyethylene resins up to 100° F. Each application should be considered individually. All concentrations apply except where noted.

Acetic Acid <1%
Aluminum Salts
Alum
Ammonium Hydroxide
Ammonium Salts
Amyl Alcohol
Antimony Salts
Arsenic Acid
Barium Hydroxide
<1% Benzene Sulfonic Acid
Bismuth Salts
<10% Boric Acid
<10% Bromic Acid
Butanediol
Butyl Alcohol
Calcium Hydroxide
Calcium Salts
Chromic Acid<50%
<1% Citric Acid
Copper Salts
Detergents
Diazo Salts
Diethyl Carbonate
Diethanol Amine
Diethylene Glycol
Diglycolic Acid
Dimethylamine
Dimethyl Formamide

Ethyl Alcohol
Ethylene Glycol
Ferric Salts
Ferrous Salts
<5% Fluoboric Acid
Fluosilicic Acid
Formic Acid <1%
Gallic Acid
Gluconic Acid
Hexanol
Hydrazone<35%
Hydrozine Hydrochloride
Hydriodic Acid
Hydrobromic Acid
Hydrochloric Acid
<5% Hydrofluoric Acid
<5% Hydrofluorosilicic Acid
Hydrogen Peroxide<52%
Hydrogen Phosphide
Hydroquinone
Hypochorous Acid
Iodine Solutions
Lactic Acid
Latex
Lead Acetate
Magnesium Salts
Mercuric Salts
Mercurous Salts

Mercury
Methyl Alcohol
Methylsulfuric Acid
Michel Salts
Nicotinic Acid
Nitric Acid<50%
Oxalic Acid <1%
Perchloric Acid <1%
Phenol<10%
Potassium Hydroxide
Potassium Salts
Phosphoric Acid
Photographic Solutions
Propyl Alcohol
Propylene Glycol
Sea Water
Selenic Acid <1%
Sewage
Silicic Acid
Silver Salts
Soap Solutions
Sodium Ferricyanide
Sodium Ferrocyanide
Sodium Hydroxide
[1]Sodium Hypochlorite<9%
Sodium Salts
Sodium Sulfonates
Stanic Salts

Stannous Salts
Starch Solutions
Stearic Acid
Sulfuric Acid <80%
Sulfurous Acid
Sugar Solution
Glucose
Lactose
Sucrose, etc.
Tannic Acid
Tanning Extracts
Tartaric Acid
Titinium Acid
Toluene Sulfonic Acid
Triethanolamine
Urea
Vinegar
Wetting Agents
Zinc Salts

[1]Concentrations above stated percentage, require special considerations, contact factory for guidelines concerning these applications

Table II

The following oils and organic chemicals do not attack HDXLPE resins. They will be absorbed into the wall of the tank; however, there should be no loss of chemical. Because of this absorption, no chemical other than the original should be stored in the tank as long as contamination may result as the absorbed oil is leached out. Storage at temperatures up to 100° F are possible provided the effects of the absorption on the properties of the tank are not prohibitive.

Fatty Acids	Mineral Oils	Animal Fats	Vegetable Oil
Butyric	Lube	Lard	Corn
Lauric	Transformer	Fish Oil	Coconut
Linoleic	Hydraulic	Musk Oil	Cottonseed
Oleic		Whale Oil	Olive
Palmitic			Peanut
Stearic			

Table III

The following organic chemicals do not attack high density crosslinkable polyethylene resins. They will be absorbed into the wall of tank and a permeation loss will occur. Because of this permeation and the effect it has on the physical properties of the tank, it is generally not recommended that these chemicals be storage at room temperatures above 100° F. However, their use largely depends on such factors as size of tank, its location, toxicity of the chemical and applicable codes such as NFPA, OSHA, etc.

Aniline
Benzene
Carbon Tetrachloride
Chlorabenzene
Cychohexanol
Cycolohexnone
Dibutylphthalate
Diesel Fuel
Dimethylamine

Ethyl Butyrate
Ethylene Chlorohydin
Fuel Oil
Futural
Aliphatic Hydrocarbons (hexane, octane, hexene, octene, etc.)
Jet Fuel
Gasoline

Nitrobenzene
Octyl Cresol
Propylene Dichloride
Toluene
Xylene

This document [illegible] and recommendations cannot be guaranteed because the conditions of use are beyond our control. Information presented herein is given without reference to any patent questions which may be encountered in use thereof. Such questions should be investigated by those using this information. [illegible] Company assumes no responsibility for the use of this material [illegible] and hereby [illegible] liability in regard to such use.

POLYPROCESSING COMPANY
Providing Solutions Through Innovation

Chemical Resistance

Chemical Resistance

Chemical "resistance" and "compatibility" are synonymous terms used in relation to the ability of a plastic to function in different environments. In regards to polyethylene chemical storage tanks, chemical resistance encompasses the total effect a product would have on a tank. The factors that make up the overall compatibility of a chemical to a rotomolded tank are (1) chemical attack, (2) absorption or permeation, and (3) solubility and stress crack resistance.

Chemical Attack

By definition, chemical attack involves an actual chemical reaction with the plastic. This can be a breaking of molecular chains and/or an addition of chemical groups to the molecule. For example, in the case of an oxidation reaction with polyethylene, both occur with the addition of carbonyl groups. This causes and eventual loss of properties to the point that a tank would not be serviceable.

Polyethylene in general is one of the most inert plastics available. Very few chemicals react with polyethylene and with those that do, the rate is relatively slow. The ultra high molecular weight characteristics of high density crosslinked polyethylene resins after crosslinking makes these particular polyethylenes even more resistant than other grades.

Permeation

This involves the physical absorption of the chemical into the polyethylene. If this is a volatile chemical, then an actual loss of the product can occur as the chemical vaporizes from the outer wall of the tank. The amount of absorption is generally limited to 3 to 7 percent by weight of the polyethylene. Also, the loss of volatile products is relatively small. For example, a 25-gallon tank with a 50-mil wall will only lose between 5 and 6 grams of gasoline per day due to permeation. The thicker the wall, the lower the rate of loss.

The absorption of a product into the wall of a tank will cause more property changes. The tensile strength is reduced approximately 15 to 20 percent and stiffness approximately 20 percent. Normally, this does not affect the utility of a tank or prohibit the application. The property losses due to permeation are offset by increasing the design wall thickness of the tank.

Elevated Temperature

The effects of elevated temperature (100° F or greater) on polyethylene tank are predictable and expected. Polyethylene, which is a flexible material, becomes even more flexible when heated. It will, therefore, bulge more at an elevated temperature than at room temperature.

By looking at the design hoop stress values for various temperatures, one can see the effects of increased temperature services. The values remain relatively constant up to 100° F, after which they begin to decrease.

100° F	600 psi	130° F	450 psi
110° F	550 psi	140° F	400 psi
120° F	500 psi	150° F	300 psi

A rise in temperature of 50° F (100° F to 150° F) reduces the design hoop stress value from 600 psi to 300 psi and doubles the required wall thickness. It follows that simply increasing the service rating of a tank from 1.35 S.G. to 1.65 S.G., or even to 1.90 S.G. is not necessarily sufficient. The proper wall thickness must be calculated for the temperature of service.

The maximum temperature rating for crosslinked polyethylene material is 150° F. Above that temperature the thermal stabilizers in the plastic are more rapidly consumed. Continued use will cause embrittlement and a reduction in the useful life of the part. Temperature services from 100° F to 150° F are acceptable applications, however, thicker tank walls are required to maintain a safe design. Consult the factory when application such as these arise.

Authorized Distributor:

Toll-Free 1-866-590-6845
www.polyprocessing.com

Table I

The following chemicals do not attach or permeate high density crosslinkable polyethylene resins up to 100° F. Each application should be considered individually. All concentrations apply except where noted.

Acetic Acid
Aluminum Salts
Alum
Ammonium Hydroxide
Ammonium Salts
Amyl Alcohol
Antimony Salts
Arsenic Acid
Barium Hydroxide
Benzene Sulfonic Acid
Bismuth Salts
Boric Acid
Bromic Acid
Butanediol
Butyl Alcohol
Calcium Hydroxide
Calcium Salts
Chromic Acid<50%
Citric Acid
Copper Salts
Detergents
Diazo Salts
Diethyl Carbonate
Diethanol Amine
Diethylene Glycol
Diglycolic Acid
Dimethylamine
Dimethyl Formamide
Ethyl Alcohol
Ethylene Glycol
Ferric Salts
Ferrous Salts
Fluoboric Acid
Fluosilicic Acid
Formic Acid
Gallic Acid
Gluconic Acid
Hexanol
Hydrazone<35%
Hydrozine Hydrochloride
Hydriodic Acid
Hydrobromic Acid
Hydrochloric Acid
Hydrofluoric Acid
Hydrofluorosilicic Acid
Hydrogen Peroxide<52%
Hydrogen Phosphide
Hydroquinone
Hypochorous Acid
Iodine Solutions
Lactic Acid
Latex
Lead Acetate
Magnesium Salts
Mercuric Salts
Mercurous Salts
Mercury
Methyl Alcohol
Methylsulfuric Acid
Michel Salts
Nicotinic Acid
Nitric Acid<50%
Oxalic Acid
Perchloric Acid
Phenol<10%
Potassium Hydroxide
Potassium Salts
Phosphoric Acid
Photographic Solutions
Propyl Alcohol
Propylene Glycol
Sea Water
Selenic Acid
Sewage
Silicic Acid
Silver Salts
Soap Solutions
Sodium Ferricyanide
Sodium Ferrocyanide
Sodium Hydroxide
[1]Sodium Hypochlorite<9%
Sodium Salts
Sodium Sulfonates
Stanic Salts
Stannous Salts
Starch Solutions
Stearic Acid
[1]Sulfuric Acid <80%
Sulfurous Acid
Sugar Solution
Glucose
Lactose
Sucrose, etc.
Tannic Acid
Tanning Extracts
Tartaric Acid
Titinium Acid
Toluene Sulfonic Acid
Triethanolamine
Urea
Vinegar
Wetting Agents
Zinc Salts

[1]Concentrations above stated percentage require special considerations, contact factory for guidelines concerning these applications.

Table II

The following oils and organic chemicals do not attack HDXLPE resins. They will be absorbed into the wall of the tank; however, there should be no loss of chemical. Because of this absorption, no chemical other than the original should be stored in the tank as long as contamination may result as the absorbed oil is leached out. Storage at temperatures up to 100° F are possible provided the effects of the absorption on the properties of the tank are not prohibitive.

Fatty Acids	**Mineral Oils**	**Animal Fats**	**Vegetable Oil**
Butyric	Lube	Lard	Corn
Lauric	Transformer	Fish Oil	Coconut
Linoleic	Hydraulic	Musk Oil	Cottonseed
Oleic		Whale Oil	Olive
Palmitic			Peanut
Stearic			

Table III

The following organic chemicals do not attack high density crosslinkable polyethylene resins. They will be absorbed into the wall of tank and a permeation loss will occur. Because of this permeation and the effect it has on the physical properties of the tank, it is generally not recommended that these chemicals be storage at room temperatures above 100° F. However, their use largely depends on such factors as size of tank, its location, toxicity of the chemical, and applicable codes such as NFPA, OSHA, etc.

Anitine
Benzene
Carbon Tetrachloride
Chlorabenzene
Cychohexanol
Cycolohexnone
Dibutylphthalate
Diesel Fuel
Dimethylamine
Ethyl Butyrate
Ethylene Chlorohydin
Fuel Oil
Fufural
Aliphatic Hydrocarbons (hexane, octane, hexene, octene, etc.)
Jet Fuel
Gasoline
Nitrobenzene
Octyl Cresol
Propylene Dichloride
Toluene
Xylene

This document reports accurate and reliable information to the best of our knowledge, but our suggestions and recommendations cannot be guaranteed because the conditions of use are beyond our control. Information presented herein is given without reference to any patent questions which may be encountered in use thereof. Such questions should be investigated by those using this information. Poly Processing Company assumes no responsibility for the use of information presented herein and hereby disclaims all liability in regard to such use.

OR-1000™ Tank Systems!

Specify Peace of Mind!

NSF/ANSI 61

- **OR-1000™ Engineered System**
- **4 Times Antioxidants**
- **Certified for 31+ Hazardous and Corrosive Chemical Applications**
- **Design Temperatures to 140°F**
- **Complies with State Regulations**

Provide Longer Tank Life with an IMFO®/OR-1000™ System!

Increase Tank Longevity!

- Proven System since 1995
- Increased Chemical Resistance
- Complete Drain
- Maintenance Free
- Avoids Confined-Space Entry
- 4x Anti-Oxidant Package
- Sodium Hypochlorite/Sulfuric Acid/ Hydrochloric Acid applications*

*See warranty information on page 26

POLY PROCESSING COMPANY
Providing Solutions Through Innovation

Storage Solution: OR-1000 Liner

Poly Processing Company is the only rotational molding company with the ability to provide the strength, durability and safety of HDXLPE with the added value of an oxidation resistant liner, OR-1000, integrally molded as the interior surface of the part.

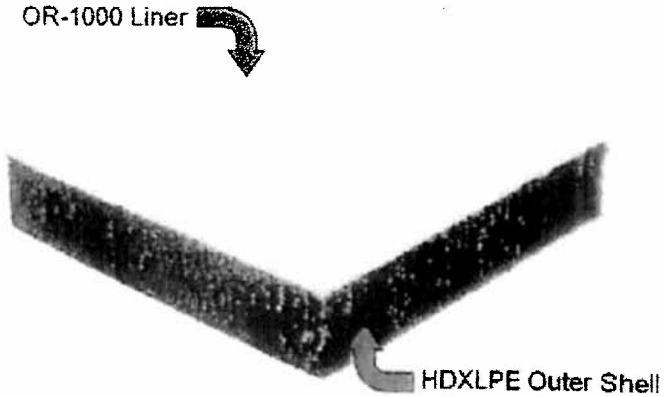

The liner thickness is in addition to the ASTM design thickness of the HDXLPE outer shell for the intended chemical application. This crosslink / OR-1000 combination has been successfully used for Sodium Hypochlorite and Sulfuric Acid services since 1995. To even further enhance the value of this combination, we are now adding this lining to the new high performance Metallocene High Density Crosslinked resin.

The reason for the OR-1000 material is simple. To develop the outstanding long-term properties of HDXLPE, the amount of anti-oxidants must be limited. Although HDXLPE has superior properties to any other rotational mold grade polyethylene, in a few highly oxidizing chemical applications, its optimum service life has not been obtained. To capitalize on the superior properties and performance characteristics of HDXLPE, the OR-1000 liner was developed to serve as an oxidation barrier to improve service life in oxidizing chemical applications. This combination provides unmatched performance and value to our customers.

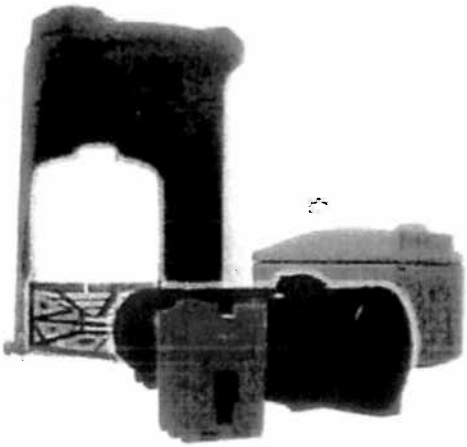

Sodium Hypochlorite and Sulfuric Acid remain very difficult storage and handling applications. However, we continue to bring you the very best in value, service and high performance products -- Poly Processing Company, *providing solutions through innovation.*

CERTIFIED ISO 9001

member

THE CHLORINE INSTITUTE, INC.
member

Authorized Distributor

1-866-590-6845
www.polyprocessing.com

PROCESSING

Providing Solutions Through Innovation

Polyethylene Tank Life Expectancy

For 35 years, Poly Processing Company has been **Helping Our Customers . . . Solve Problems** associated with storing hazardous chemicals, **Managing Risk** with the Environment and Employee Safety and **Growing Their Profits** with Increased Tank Longevity and Operating Efficiencies. We have specialized in providing hazardous chemical storage solutions to the industrial, water and waste water markets. While we manufacture both linear and crosslink polyethylene storage tanks; in **hazardous chemical environments, crosslink polyethylene** is the material of choice. Our customers report crosslink polyethylene tanks providing service for 10+ years with 15 to 20 years of tank service being common. However; there are many factors and variables that have an effect on the useful life of any tank including polyethylene.

Chemical, Concentration and Temperature: The chemical, concentration and operating temperature are all factors influencing the life expectancy of a polyethylene tank. For example, high concentrations of Sulfuric Acid are stress cracking agents and are more aggressive oxidizers than less concentrated chemicals such as 25% Caustic Soda. For this reason, Poly Processing offers our customers the OR-1000™ Anti-Oxidant Systems. Another example: 12% Sodium Hypochlorite will degrade from UV exposure and elevated temperatures. As it degrades, sediment builds in the bottom of the tank leading to a shorter tank life. To eliminate this sludge buildup, Poly Processing Company offers our customers the IMFO® (Integrally Molded Flanged Outlet). The IMFO® design promotes continuous "system" flushing increasing tank life and operating efficiencies. Poly Processing Company chemical storage tanks are constructed from premium materials and designed specifically for the chemical, concentration and temperature requirements.

Installation and Piping: The single biggest reason for tank life reduction is improper tank installation and **"hard"** piping. Polyethylene's broad spectrum of chemical resistance vs. other materials of construction is based on its ability to expand and contract. Flexible connections compensate for tank expansion and contraction promoting a longer useful life. It is important to follow Poly Processing Company's Installation Manual Instructions during the installation process.

Venting: Often overlooked, venting is a very important step that promotes tank longevity. Polyethylene tanks are rated at atmospheric pressure/vacuum. Adequate vent size is always based on flow and delivery rates so it is important to gather the following information to adequately determine the proper venting requirements:

1) Is the tank to be filled pneumatically?
2) Is the tank to be vented to atmosphere?
3) Does the length of the vent exceed 3 feet (piped to a central vent system)
4) Is a fume scrubbing system to be used?
5) Are vent screens to be used (restricts flow)?
6) Does the tank manufacturer offer a method of "emergency venting" to prevent over-pressurization?

Other Items Effecting Tank Longevity:

1) Continuous cycling (fill / discharge)
2) Excessive agitation
3) Mobile applications

For further information about your specific needs or applications, please contact Poly Processing Company at 1-866-590-6845 or visit our website at www.polyprocessing.com.

POLYPROCESSING COMPANY
Providing Solutions Through Innovation

Chemical Resistance

Chemical Resistance

Chemical "resistance" and "compatibility" are synonymous terms used in relation to the ability of a plastic to function in different environments. In regards to polyethylene chemical storage tanks, chemical resistance encompasses the total effect a product would have on a tank. The factors that make up the overall compatibility of a chemical to a rotomolded tank are (1) chemical attack, (2) absorption or permeation, and (3) solubility and stress crack resistance.

Chemical Attack

By definition, chemical attack involves an actual chemical reaction with the plastic. This can be a breaking of molecular chains and/or an addition of chemical groups to the molecule. For example, in the case of an oxidation reaction with polyethylene, both occur with the addition of carbonyl groups. This causes and eventual loss of properties to the point that a tank would not be serviceable.

Polyethylene in general is one of the most inert plastics available. Very few chemicals react with polyethylene and with those that do, the rate is relatively slow. The ultra high molecular weight characteristics of high density crosslinked polyethylene resins after crosslinking makes these particular polyethylenes even more resistant than other grades.

Permeation

This involves the physical absorption of the chemical into the polyethylene. If this is a volatile chemical, then an actual loss of the product can occur as the chemical vaporizes from the outer wall of the tank. The amount of absorption is generally limited to 3 to 7 percent by weight of the polyethylene. Also, the loss of volatile products is relatively small. For example, a 25-gallon tank with a 50-mil wall will only lose between 5 and 6 grams of gasoline per day due to permeation. The thicker the wall, the lower the rate of loss.

The absorption of a product into the wall of a tank will cause more property changes. The tensile strength is reduced approximately 15 to 20 percent and stiffness approximately 20 percent. Normally, this does not affect the utility of a tank or prohibit the application. The property losses due to permeation are offset by increasing the design wall thickness of the tank.

Elevated Temperature

The effects of elevated temperature (100° F or greater) on polyethylene tank are predictable and expected. Polyethylene, which is a flexible material, becomes even more flexible when heated. It will, therefore, bulge more at an elevated temperature than at room temperature.

By looking at the design hoop stress values for various temperatures, one can see the effects of increased temperature services. The values remain relatively constant up to 100° F, after which they begin to decrease.

100° F	600 psi	130° F	450 psi
110° F	550 psi	140° F	400 psi
120° F	500 psi	150° F	300 psi

A rise in temperature of 50° F (100° F to 150° F) reduces the design hoop stress value from 600 psi to 300 psi and doubles the required wall thickness. It follows that simply increasing the service rating of a tank from 1.35 S.G. to 1.65 S.G., or even to 1.90 S.G. is not necessarily sufficient. The proper wall thickness must be calculated for the temperature of service.

The maximum temperature rating for crosslinked polyethylene material is 150° F. Above that temperature the thermal stabilizers in the plastic are more rapidly consumed. Continued use will cause embrittlement and a reduction in the useful life of the part. Temperature services from 100° F to 150° F are acceptable applications, however, thicker tank walls are required to maintain a safe design. Consult the factory when application such as these arise.

Crosslinked Polyethylene with OR-1000™ System
The #1 System for Oxidizing Chemical Environments

Poly Processing Company and other polyethylene tank manufacturers, as well as major polyethylene resin manufacturers have published many documents over the past several years discussing the benefits of certain rotational molding resins in acidic and alkaline chemical environments. The majority of these documents support the use of crosslinked polyethylene over linear polyethylene in acidic and basic chemical environments. These articles speak to the longevity of crosslinked polyethylene rotationally molded tanks, the safety of having polymer chains that are chemically bonded, and the leveraged investment of knowing that crosslinked polyethylene chemical storage tanks have been utilized for the last 35 years.

In 2001, one of the largest resin manufacturers in North America published a fairly extensive study which showed that their linear polyethylene in a lab environment performed as well as, if not better than crosslinked polyethylene, in acidic and alkaline chemical applications. This study, coupled with marketing efforts by linear polyethylene tank manufacturers who do not rotationally mold crosslinked polyethylene tanks in the course of their normal business, has given rise to some industry confusion and misunderstanding about what is the best resin system for storing oxidizing chemicals. We will summarize the facts about rotationally molded polyethylene storage tanks and the value of an engineered antioxidant resin system coupled with the long-term performance of crosslinked polyethylene.

We would first like to discuss the lab study performed by the linear resin manufacturer. The study compared crosslinked polyethylene with linear polyethylene in sulphuric acid and sodium hypochlorite environments. The sulphuric acid was concentrated approximately 93%-97%, and the Sodium Hypochlorite was around 14% concentration. The lab study describes how the crosslinked polyethylene and linear polyethylene were submersed in the chemicals and then tested using ARM Impact testing as well as Environmental Stress Crack Resistivity (ESCR) testing. The study concluded that the linear materials in a chemical resistivity mode held up as well as crosslinked materials in a lab environment. In addition, Higher ESCR properties are found in lower density materials like LLDPE or LDPE as compared to HDPE resins. It doesn't mean you want to use a tank made only from the lower density resins. ESCR shows how well the material performs in a pre-notched condition in the presence of certain chemicals.

The lab study performed by the resin manufacturer did not cover or discuss the long-term properties of these materials in harsh, environmental conditions. Over time, sodium hypochlorite and sulphuric acid create an oxidative environment, which remove hydrogen molecules from the polymer chains creating embrittlement. This phenomenon is inherent to all types of polyethylene, since they are hydrocarbon based molecules. Storing acids and bases in actual everyday environments presents a completely different set of parameters and stresses that have little to do with the lab environment.

Poly Processing Company has been aware of this relationship between ESCR and Chemical resistance for many years and has been an industry leader in creating engineered resin systems which give the end user the ability to have excellent oxidation and chemical resistivity without sacrificing long term performance and toughness. These engineered resin systems deliver peace of mind, a margin of safety, and leveraged investment to the end user.

Another critical factor to consider when storing acids and bases in actual everyday environments is the Long Term Hydrostatic Strength (LTHS) of the polyethylene. LTHS properties are one of the keys to providing the continued strength necessary for tanks during its service life. This property is especially important in field applications where tanks can see elevated temperatures approaching

140°F. LTHS tests are conducted at both ambient temperature (73°F) and at elevated temperature (140°F) since actual field conditions are typically in this range.
Figure 1.

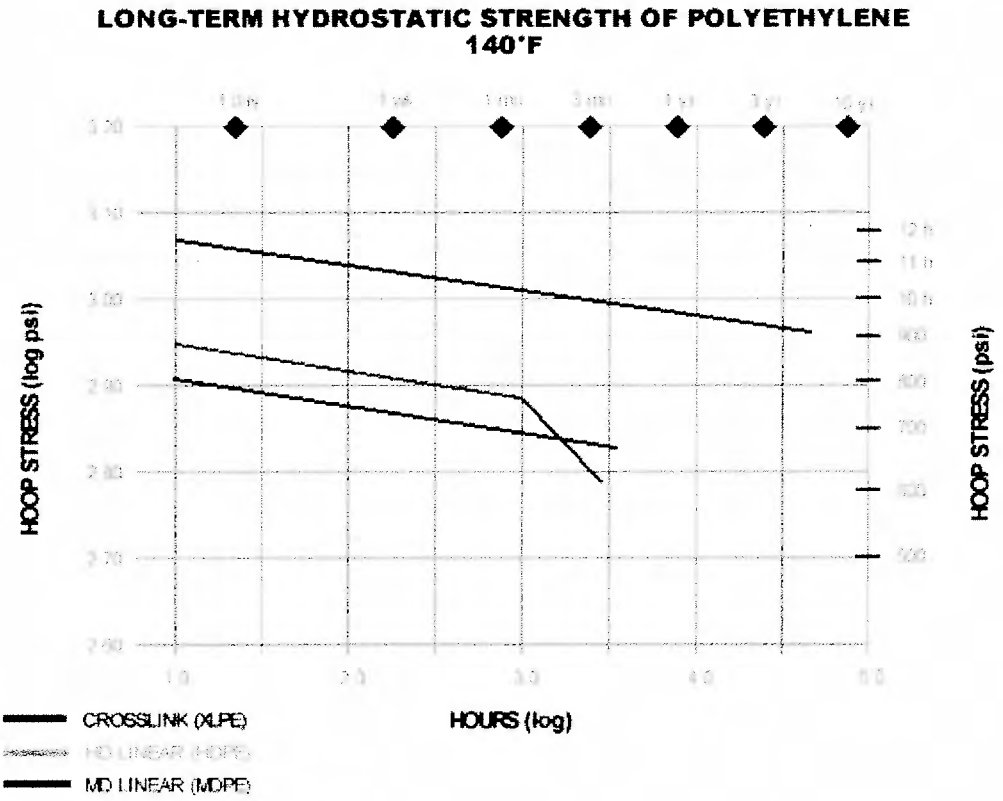

Source: Chevron Phillips Company, Plastics Technical Center

The rapid deterioration in properties is indicated by a "knee" in the curve of hoop strength versus time as illustrated in Figure 1 above. Even high performance HDPE will develop a LTHS knee at around 1000 hours (log 3), and some MDPE products will have a knee in less than 10,000 hours (log 5). This type of performance substantially reduces the expected long-term performance at elevated temperatures. Crosslinked polyethylene has been tested to 50,000 hours at 140°F and shows no signs of a knee.

There is still the need to surround the oxidation resistant material with a robust resin system that will give you longer useful tank life, superior impact resistance, and greater tensile strength for a safer product. That is why crosslinked polyethylene is still the material of choice for industrial and municipal chemical applications.

Poly Processing Company has been the leader in rotationally molded crosslinked polyethylene storage tanks for 35 years. We work with the leading universities in the country to develop engineered resin systems that will perform above and beyond any standard "off the shelf" polyethylene in harsh, oxidizing environments. One of the systems we developed is the OR-1000™ system. This system uses the best linear resin for chemical resistivity combined with four (4) times the antioxidant power and a crosslink outer wall for maximum long-term performance and durability.

Poly Processing Company developed the OR-1000™ oxidation resistance system in 1995. This lower density linear material serves to increase the service life of crosslinked polyethylene tanks in oxidizing chemical service (Sodium Hypochlorite, Sulphuric Acid, Hydrochloric Acid, and Nitric Acid). To develop the outstanding long-term physical properties of crosslinked polyethylene, the amount of antioxidant compounded into the material has to be limited. Although crosslinked polyethylene has superior properties to any other rotational molding grade polyethylene, the tank's useful service life will be reduced without the OR-1000™ system. In order to utilize the superior properties of crosslinked polyethylene, the OR-1000™ system was developed to greatly improve the service life in harsh oxidizing chemical environments. This material is a medium density linear based resin with a large amount of antioxidant added to it for the best oxidizing resistance system in the industry. The OR-1000™ system has been engineered to prevent de-lamination during the useful life of the tank.

To compare the effect of oxidizing chemicals on the OR-1000™ system and crosslinked polyethylene, 1/8" thick tensile bars of both OR-1000™ and crosslinked polyethylene were submerged in a manufacturer's storage tank. This tank handled a highly oxidizing chemical, 17% Sodium Hypochlorite, and was emptied and filled at least once a day. Every 30 days, samples were pulled and tensile and percent elongation was determined as well as ESCR tests. Oxidization or reduction in physical properties is indicated by reduced in elongation. After six months of testing, the elongation of the crosslinked polyethylene tensile bars had decreased 26% while OR-1000™ elongation had no change. This is due to the added antioxidant in the OR-1000™ system as well as the fact that the linear material used in the testing was a lower density material than the crosslinked material.

Crosslinked polyethylene provides superior environmental stress cracking resistance (ESCR) or sometimes generally referred to as resistance to slow crack growth (SCG) in almost all chemical applications. Two tests which clearly show this difference are the bent strip ESCR (ASTM D1693) with 10% Igepal where crosslink polyethylene does not fail in over 1000 hours compared to typical values for LMDPE of <400 hours. Another test which shows the slow crack growth difference with no surfactant (in air) is the polyethylene notch test (PENT) described in ASTM F 1473 and crosslink polyethylene again does not fail in over 1000 hours and LMDPE grades fail in <100 hours. Even though linear polyethylene grades with improved ESCR have become available over the past 10 to 15 years, they still do not match crosslinked polyethylene in SCG performance. Slow crack growth resistance as was shown earlier in this paper is an important property that can affect the long-term performance of tanks.

The best of both worlds is having the OR-1000™ system for the long-term oxidative resistivity characteristics (as discussed in the resin manufacturer's lab study), with the robustness of crosslinked polyethylene for the long-term durability and long useful life that is expected of industrial grade chemical storage tanks. This is why so many chemical manufacturers and distributors choose Poly Processing Company for engineered chemical storage solutions.

Crosslinked polyethylene tanks with the OR-1000™ system varying in sizes from 500 gallons to 14,950 gallons have been in true industrial and municipal use for over 10 years with excellent results. Poly Processing Company backs every crosslinked polyethylene tank with the OR-1000™ system with a 5 year full warranty on all suitable applications including sodium hypochlorite and hydrochloric acid, sulfuric acid 80%-98% carries a full 3 year warranty

Store your harsh oxidizing chemicals with the confidence and peace of mind that you deserve. Specify Poly Processing Company's crosslinked polyethylene tanks with the OR-1000™ system for longevity, safety, and leveraged investment. Please consult your distributor or Poly Processing Company at 1-866-590-6845 for your specific requirements.

tobeywade
STRUCTURAL ENGINEERS

October 2, 2009
Project No. R115-07-08

Mr. Tom Nelson
PHILIP SERVICES CORPORATION
ENVIRONMENTAL SERVICES DIVISION
2095 Newlands Drive East
Fernley, NV 89408

RE: PLANNED TANK 207 CERTIFICATION REPORT

Dear Mr. Nelson:

In accordance with the Fernley Facility Amended Tank Replacement plan as prepared by PSC and dated March 25, 2008, each tank is required to be certified by Independent Registered Professional Engineers (IRPE's) prior to being placed into service. This letter has been prepared to document the evaluation of Planned Tank 207 as performed by Tobey-Wade Consulting.

Background

Planned Tank 207 will be a Crosslinked Polyethethylene Tank as manufactured by Poly Processing Company and with a 6,250 gallon capacity. Poly Processing has provided data relative to the tank's strength and its chemical resistance capabilities.

Schiff Associates has evaluated the tank's suitability and compatibility for its proposed use in PSC's facility. Their conclusions have been provided under separate cover to PSC.

Findings

Based on our analysis, the following systems are hereby certified as being in compliance with the Amended Tank Replacement plan:

- Planned Tank 207 will be situated on a reinforced concrete foundation system which is capable of adequately supporting the tank and its contents under static and dynamic conditions.
- Planned Tank 207 will be located in an area with sufficient secondary containment as required by 40 CFR Ch. I, 264.193.
- Planned Tank 207 will be stabile against overturning when subjected to loads based on 2006 International Building Code level seismic events.

ADDITION DATE 10/09/09
REVISION NUMBER 1

NEVADA OFFICE
329 FLINT STREET ■ RENO, NEVADA 89501 ■ TEL: (775) 324.7757 ■ FAX: (775) 324.7797

- Planned Tank 207 will be anchored to prevent sliding when subjected to loads based on 2006 International Building Code (IBC) level seismic events. Structural Observation and Special Inspection of the anchorage system will be performed as required by the IBC.

Structural Observation will be provided by Tobey-Wade Consulting under my direct supervision. Special Inspections will be performed by ICC-certified inspectors based on anchorage requirements provided by Tobey-Wade Consulting.

Certification Statement

I certify under penalty of law that this report and all attachments were prepared under my direction and supervision in accordance with a system developed to assure that qualified personnel properly gather and evaluate the information submitted. Based on my inquiry of the person or persons who manage the system or those persons directly responsible for gathering the information, the information, submitted is, to the best of my knowledge and belief, true, accurate, and complete. I am aware that there are significant penalties for submitting false information, including the possibility of fines and imprisonment for knowing violations.

This report has been prepared in accordance with acceptable engineering practices and is subject to the assumptions and limitations stated in the report. Also note that this certification covers the aforementioned aspects of Tank 207 only.

Please feel free to contact me at your convenience should you have any questions relating to our findings.

Sincerely,
TOBEY-WADE CONSULTING

Terrence R. Tobey

Terrence R. Tobey, S.E.
Principal Structural Engineer

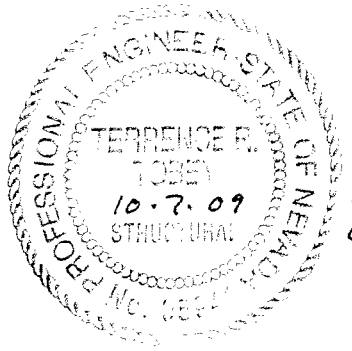

EXP.
6.30.10

ADDITION DATE 10/09/09

REVISION NUMBER 1

NON-CONTROLLED COPY
INFORMATION SUBJECT TO CHANGE WITHOUT NOTICE
VERIFY REV LEVEL OF PAPER COPY WITH REV LEVEL ON PPC WEB SITE

Proposed Storage Tank

(A) MOLDED-IN LIFTING LUG PAIRS (4) PLACES
USE MINIMUM OF (1) LUG AT EACH LOCATION FOR LIFTING (SEE DETAIL)

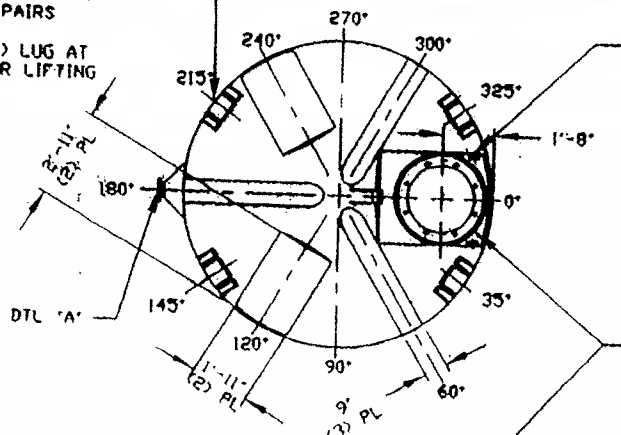

MOLDED-IN LADDER ATTACHMENT LUG TYP (2) PLACES

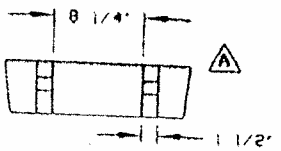

LIFTING LUG DETAIL
(4) PLACES
SCALE: 1"=1'-0"

STANDARD COVER:
24"/(8) BOLT MANWAY COVER/PE (SHOWN)
PPC STOCK NO. 3218 OR
24"/STRAPPED MANWAY COVER/PE (B)
PPC STOCK NO. 3217
(OPTIONAL 24" COVERS AVAILABLE)

NOZZLE SCHEDULE & ACCESSORIES

SERVICE	MK	STOCK NO.	SIZE	FITTING	DEG	ELEV

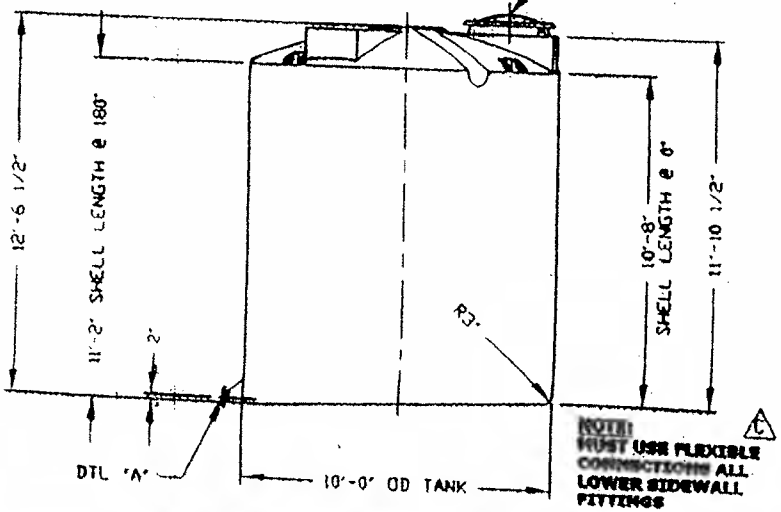

(C) NOTE:
MUST USE FLEXIBLE CONNECTIONS ON ALL LOWER SIDEWALL FITTINGS

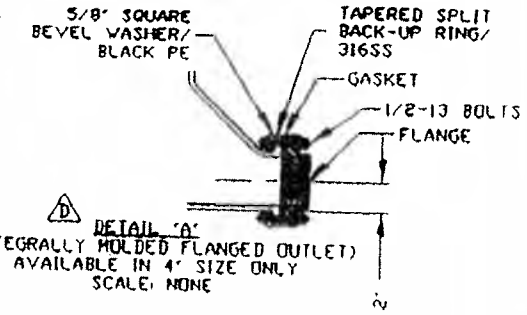

(D) DETAIL 'A'
(INTEGRALLY MOLDED FLANGED OUTLET)
AVAILABLE IN 4" SIZE ONLY
SCALE: NONE

NOTES
1. THIS IS A COMPUTER GENERATED DWG. DO NOT REVISE BY HAND.
2. DIMENSIONS WILL VARY ±3% DUE TO VARIATIONS IN MULTIPLE MOLDS & CONDITIONS PREVALENT DURING MANUFACTURE & USAGE.
3. NO MOLDED IN GALLONAGE MARKERS THIS TANK.

CALCULATED CAPACITIES/ VOLUME IN U.S. GALLONS

DESIGN CAP	DOME VOL	TOTAL VOL
6283	470	6753

CONFIDENTIAL PROPERTY OF POLY PROCESSING COMPANY
NOT FOR REPRINT OR USE WITHOUT PERMISSION

REVISION NUMBER 1
ADDITION DATE 10/09/09

REV "E" REVISED FOR MOLD MODIFICATIONS BYJB 6/16/053 CK:VH
REV "D" REVISED INFO STYLE BYJB 4/30/03 CK:VH
REV "C" ADDED FITTING NOTE BYJB 3/3/02 CK:HBV
REV "B" REVISED STOCK NUMBER BYJB 3/3/02 CK:HBV
REV "A" ADDED LIFTING LUGS & DETAIL BYJB 10/31/02 CK:VH

PART TITLE: 6250 GALLON SLOPE BOTTOM IMFO TANK

SCALE	1/4"=1'-0"	BY	HB WILKERSON
DATE	3/17/00	CK	D. RECTOR

PolyProcessing Company

SHEET	COMPUTER FILE	REV
1 OF 1	1120625D	E

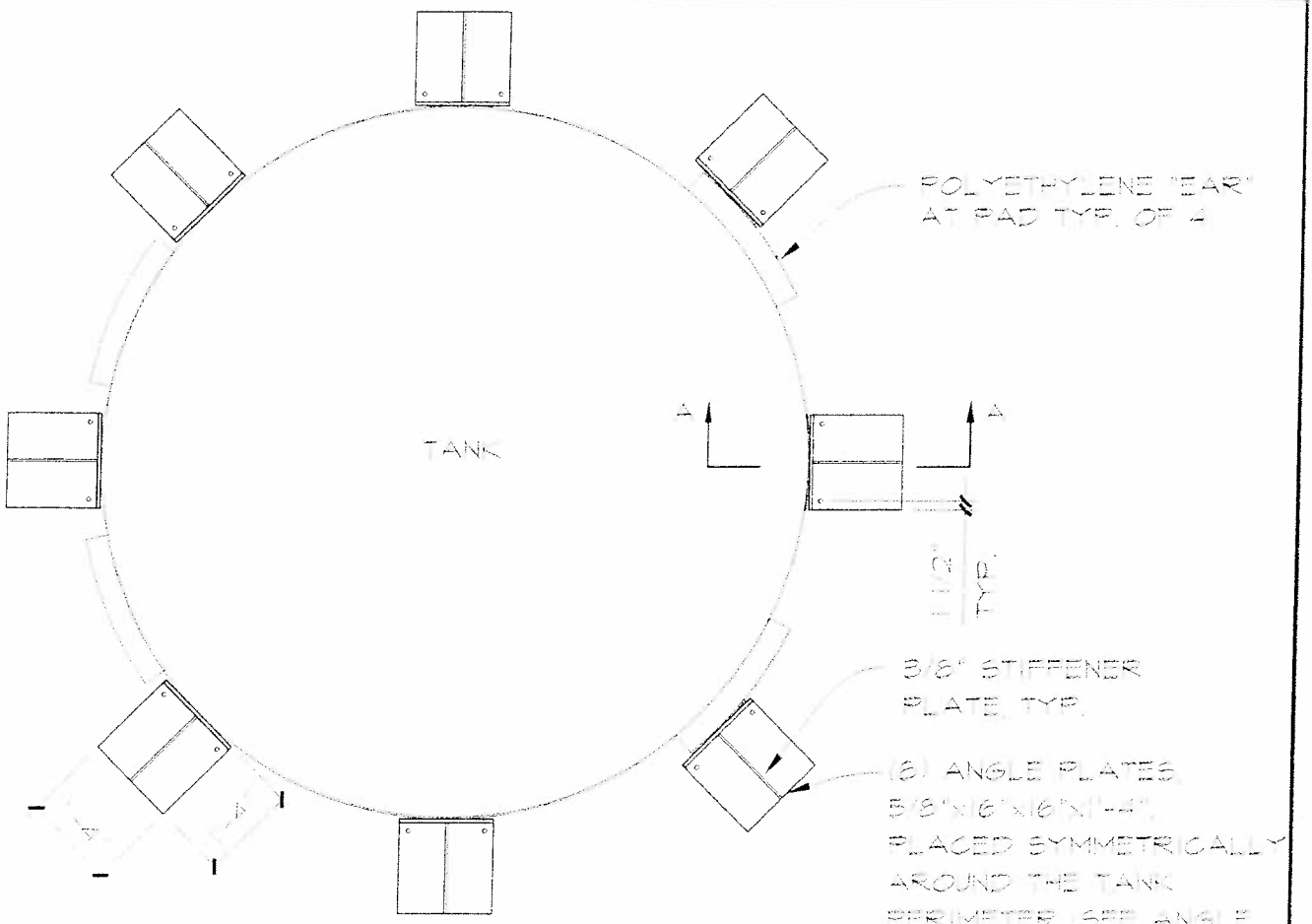

TANK NO's 201 - 208
CYLINDRICAL FLAT BOTTOM TANK

SCALE: 3/8"=1'-0"

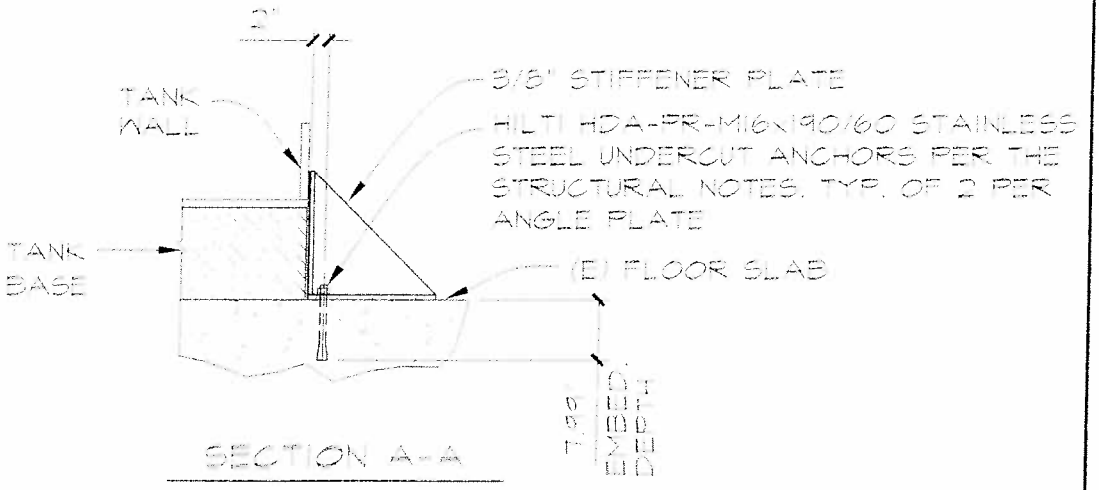

SECTION A-A

N.T.S.

tobey **wade**
CONSULTING
329 Flint Street
Reno, Nevada 89501
Tel. (775) 324-7757 Fax (775) 324-7797

PHILIP SERVICES CORPORATION
FERNLEY FACILITY
TANK NO's 201-208
ANCHORAGE DETAILS
FERNLEY, NEVADA

Project No.
R115-07-08

ADDITION DATE 10/09/09
Date: OCT. 5, 2009
REVISION NUMBER 1

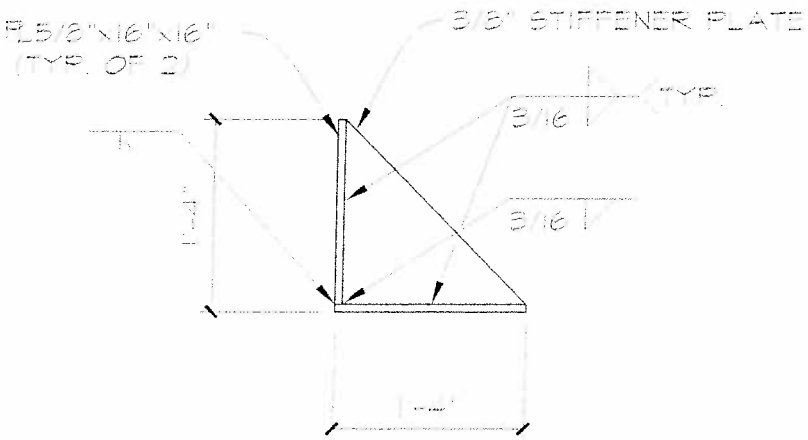

ANGLE PLATE DETAIL

SCALE: 3/4"=1'-0"

tobey **wade**
CONSULTING
329 Flint Street
Reno, Nevada 89501
Tel. (775) 324-7757 Fax (775) 324-7797

PHILIP SERVICES CORPORATION
FERNLEY FACILITY
TANK NO's 201-208
ANCHORAGE DETAILS
FERNLEY, NEVADA

Project No.
R115-07-08

ADDITION DATE 10/09/09
Date: OCT. 5, 2009
REVISION NUMBER 1

TANK DATA SHEET

RCRA-Regulated? **YES**

Tank Location: **Tank Storage Bay - Alkaline Area**

Tank Name: **Waste Alkaline Storage**

Tank Numbers: **#207 - #208**

Process Description: **Alkaline Storage**

Vessel Fluid: **Waste Alkaline liquid Mixtures**

Specific Gravity **≤ 1.90** Freeboard At Working Vol (ft): **6" + dome top**

Normal Operating Pressure (psig): **Atmospheric** Temperature (°F): **Ambient**

	Material	Thickness	Type
Bottom	**Cross-link Polyethylene**	**5/8" nominal**	**Flat, Sloped**
Shell	**Cross-link Polyethylene**	**Varies .40" - .90" top to bottom**	**Cylindrical**
Top	**Cross-link Polyethylene**	**Design Avg. .40"**	**Domed Roof**

Working Volume (USG): **6000** Insulation: **None**

Nominal Volume (USG): **6280** Method of Construction: **Rotationally Molded**

Tank O.D. (ft): **10' - 0"** Tank Height or Length (ft): **12' – 6 1/2"**

Design Code Used: **ASTM D1998** Date in Service: **2009**

Anchorage: **Seismic restraints bolted to concrete. Anchorage designs per 2006 IBC.**

Connections

Item No.	Size (In.)	Gasket	Description
1	**24"**		**Roof manway / E-vent**
2	**4"**		**Vent fitting to Scrubber**
3	**3"**		**Tank Fill fitting**
4	**2"**		**Level Sensor connection**
5	**4"**		**Flange Drain fitting**
6			**Lifting Lugs**
7			
8			
9			
10			
11			
12			
13			
14			
15			

Tank Mfgr: **Poly Processing Co.**

Remarks: **Poly Processing stock #1206250. Tank manufactured of hi-density cross-linked rotationally molded polyethylene with "Extra heavy wall thickness" for 1.9 sp. gr. service. Tank includes OR-1000 oxidation resistant liner.**

Tank Sketch

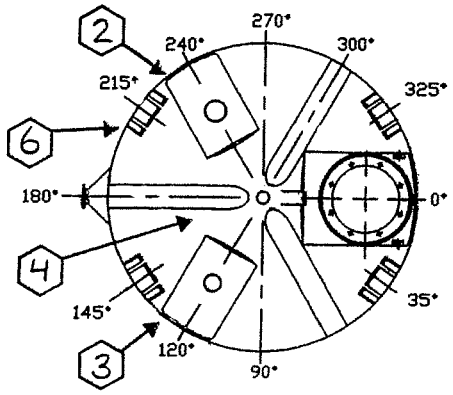

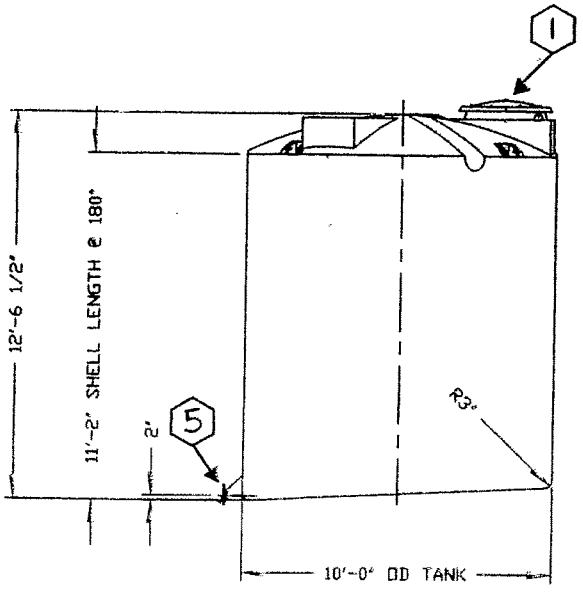

SCHIFF ASSOCIATES
FIFTY YEARS OF PROFESSIONALISM

gbell@schiffassociates.com

www.schiffassociates.com
Consulting Corrosion Engineers – Since 1959

October 6, 2009 via email to: Burgess, Aubry [ABurgess@pscnow.com]

PSC ENVIRONMENTAL SERVICES
2095 Newlands Drive E
Fernley, NV 89408

Attention: Mr. Aubry Burgess
Maintenance Supervisor

Re: **Material Compatibility/Corrosion Certification Letter for PLANNED Tank 208 for Cyanide/Alkaline Storage Tanks**
Amended Tank Replacement Plan
Fernley, NV
SA#08-1383LGL

Dear Mr. Burgess:

We have conducted the following investigations and research relative to the suitability and compatibility of the 6,250 Gallon sloped bottom High Density Polyethylene (HDPE) tanks fabricated by PolyProcessing with OR-1000™ lining system for cyanide/alkaline storage at ambient temperatures:

1) Reviewed PolyProcessing Company's product information provided on tank design and compatibility.

2) Conducted independent research on compatibility of high density cross-linked rotationally molded polyethylene for service at ambient temperature.

3) Visited the PSC facility in Fernley in December 2008 and March 2009 to understand the anticipated process flow and conditions of waste streams at the site.

4) Reviewed supplemental information requested from PolyProcessing Company regarding issues identified during site visit.

The tank design is suitable for cyanide/alkaline storage at ambient temperatures per the manufacturer's information in the position as Tank 208 in the waste processing stream of the PSC Facility as configured and intended per the Amended Tank Replacement Program outlined in the letter from Thomas Nelson of PSC to Nevada Division of Environmental Protection dated March 25, 2008.

1489 W. Warm Springs Road #110 · Henderson, NV 89014
Phone: 702.966.8266 · Fax: 702.946.6767

APPROVAL DATE 10/09/09
REVISION NUMBER 1

CERTIFICATION

I certify under penalty of law that this document and all attachments were prepared under my direction or supervision according to a system designed to assure that qualified personnel properly gather and evaluate the information submitted. Based on my inquiry of the person or persons who manage the system, or those persons directly for gathering the information, the information submitted is, to the best of my knowledge and belief, true, accurate, and complete. I am aware that there are significant penalties for submitting false information, including the possibility of fine and imprisonment for knowing violations.

CLOSURE

Our services have been performed with the usual thoroughness and competence of the engineering profession. No other warranty or representation, either expressed or implied, is included or intended.

Sincerely,
SCHIFF ASSOCIATES

GRAHAM E.C. BELL
EXP. 12-31-10
MECHANICAL

Graham E.C. Bell, PE
Principal Engineer
NACE International Corrosion Specialist #5350

Attachments: Proposed Storage Tank Drawing
Waste Information Provided by PSC on PolyProcessing Data Sheet
PolyProcessing Technical Bulletin, Chemical Resistance Technical Information
OR-1000 Tank Cut Sheet
OR-1000 Cut Sheet
OR-1000 Product Sheet
PolyProcessing Polyethylene Tank Life Expectancy
PolyProcessing Chemical Compatibility Data including Temperature Dependence
PolyProcessing Technical Bulletin, Crosslinked Polyethylene with OR-1000™ System, Dated June 2005, Rev. A

NON-CONTROLLED COPY

INFORMATION SUBJECT TO CHANGE WITHOUT NOTICE

VERIFY REV LEVEL OF PAPER COPY WITH REV LEVEL ON PPC WEB SITE

Proposed Storage Tank

(A) MOLDED-IN LIFTING LUG PAIRS (4) PLACES
USE MINIMUM OF (1) LUG AT EACH LOCATION FOR LIFTING (SEE DETAIL)

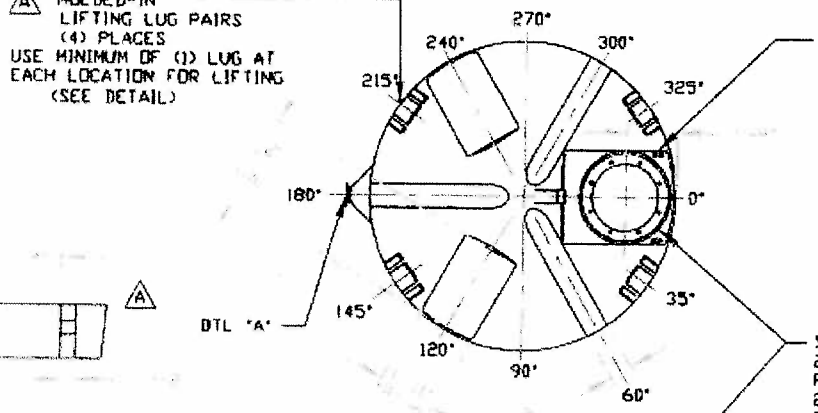

MOLDED-IN LADDER ATTACHMENT LUG TYP (2) PLACES

NOZZLE SCHEDULE & ACCESSORIES

SERVICE	MK	STOCK NO	SIZE	FITTING	DEG	ELEV

LIFTING LUG DETAIL
(4) PLACES
SCALE: 1"=1'-0"

STANDARD COVER:
24"/(8) BOLT MANWAY COVER/PE (SHOWN)
PPC STOCK NO. 3218 OR
24"/STRAPPED MANWAY COVER/PE (B)
PPC STOCK NO. 3217
(OPTIONAL 24" COVERS AVAILABLE)

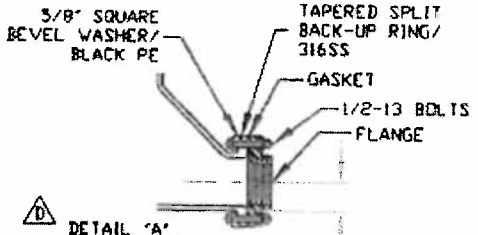

(D) DETAIL "A"
(INTEGRALLY MOLDED FLANGED OUTLET)
AVAILABLE IN 4" SIZE ONLY
SCALE: NONE

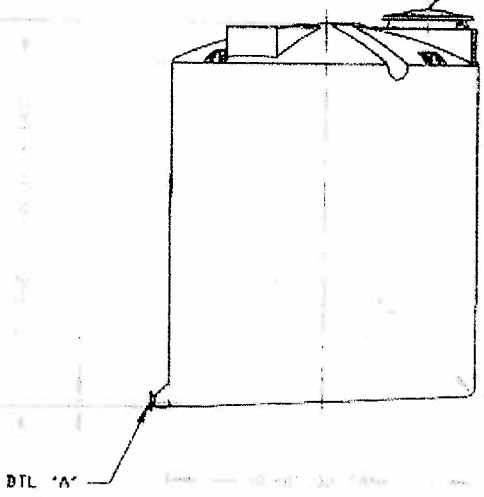

NOTE: (C)
MUST USE FLEXIBLE CONNECTIONS ALL LOWER SIDEWALL FITTINGS

NOTES
1. THIS IS A COMPUTER GENERATED DWG. DO NOT REVISE BY HAND.
2. DIMENSIONS WILL VARY ±3% DUE TO VARIATIONS IN MULTIPLE MOLDS & CONDITIONS PREVALENT DURING MANUFACTURE & USAGE.
3. NO MOLDED IN GALLONAGE MARKERS THIS TANK.

CALCULATED CAPACITIES/ VOLUME IN U.S. GALLONS		
DESIGN CAP	DOME VOL	TOTAL VOL
6283	470	6753

CONFIDENTIAL PROPERTY OF POLY PROCESSING COMPANY NOT FOR REPRINT OR USE WITHOUT PERMISSION

DWG TITLE: 6250 GALLON SLOPE BOTTOM IMFO TANK

SCALE: 1/4"=1'-0"
DATE: 3/17/00
POLY PROCESSING COMPANY
Western Region
DR: MB WILKERSON
CH: D. RECTOR
SHEET: 1 OF 1
COMPUTER FILE: 11206250
REV: E

REV "E" REVISED FOR MOLD MODIFICATIONS BY:JB 6/16/053 CK:WM
REV "D" REVISED INFO STYLE BY:JB 4/30/03 CK:WM
REV "C" ADDED FITTING NOTE BY:JB 3/3/02 CK:MBW
REV "B" REVISED STOCK NUMBER BY:JB 3/3/02 CK:MBW
REV "A" ADDED LIFTING LUGS & DETAIL BY:JB 10/31/02 CK:WM

Table I

The following chemicals do not attach or permeate high density crosslinkable polyethylene resins up to 100° F. Each application should be considered individually. All concentrations apply except where noted.

Acetic Acid <1%
Aluminum Salts
Alum
Ammonium Hydroxide
Ammonium Salts
Amyl Alcohol
Antimony Salts
Arsenic Acid
Barium Hydroxide
Benzene Sulfonic Acid <1%
Bismuth Salts
Boric Acid <10%
Bromic Acid <10%
Butanediol
Butyl Alcohol
Calcium Hydroxide
Calcium Salts
Chromic Acid<50%
Citric Acid <1%
Copper Salts
Detergents
Diazo Salts
Diethyl Carbonate
Diethanol Amine
Diethylene Glycol
Diglycolic Acid
Dimethylamine
Dimethyl Formamide
Ethyl Alcohol
Ethylene Glycol
Ferric Salts
Ferrous Salts
Fluoboric Acid <5%
Fluosilicic Acid
Formic Acid <10%
Gallic Acid
Gluconic Acid
Hexanol
Hydrazone<35%
Hydrazine Hydrochloride
Hydriodic Acid
Hydrobromic Acid
Hydrochloric Acid
Hydrofluoric Acid <3%
Hydrofluorosilicic Acid <3%
Hydrogen Peroxide<52%
Hydrogen Phosphide
Hydroquinone
Hypochorous Acid
Iodine Solutions
Lactic Acid
Latex
Lead Acetate
Magnesium Salts
Mercuric Salts
Mercurous Salts
Mercury
Methyl Alcohol
Methylsulfuric Acid
Michel Salts
Nicotinic Acid
Nitric Acid<50%
Oxalic Acid <2%
Perchloric Acid <1%
Phenol<10%
Potassium Hydroxide
Potassium Salts
Phosphoric Acid
Photographic Solutions
Propyl Alcohol
Propylene Glycol
Sea Water
Selenic Acid <1%
Sewage
Silicic Acid
Silver Salts
Soap Solutions
Sodium Ferricyanide
Sodium Ferrocyanide
Sodium Hydroxide
Sodium Hypochlorite<9%
Sodium Salts
Sodium Sulfonates
Stanic Salts
Stannous Salts
Starch Solutions
Stearic Acid
Sulfuric Acid <80%
Sulfurous Acid
Sugar Solution
Glucose
Lactose
Sucrose, etc.
Tannic Acid
Tanning Extracts
Tartaric Acid
Titinium Acid
Toluene Sulfonic Acid
Triethenolamine
Urea
Vinegar
Wetting Agents
Zinc Salts

*Concentrations above stated percentage require special considerations, contact factory for guidelines concerning these applications

Table II

The following oils and organic chemicals do not attack HDXLPE resins. They will be absorbed into the wall of the tank; however, there should be no loss of chemical. Because of this absorption, no chemical other than the original should be stored in the tank as long as contamination may result as the absorbed oil is leached out. Storage at temperatures up to 100° F are possible provided the effects of the absorption on the properties of the tank are not prohibitive.

Fatty Acids	Mineral Oils	Animal Fats	Vegetable Oil
Butyric	Lube	Lard	Corn
Lauric	Transformer	Fish Oil	Coconut
Linoleic	Hydraulic	Musk Oil	Cottonseed
Oleic		Whale Oil	Olive
Palmitic			Peanut
Stearic			

Table III

The following organic chemicals do not attack high density crosslinkable polyethylene resins. They will be absorbed into the wall of tank and a permeation loss will occur. Because of this permeation and the effect it has on the physical properties of the tank, it is generally not recommended that these chemicals be storage at room temperatures above 100° F. However, their use largely depends on such factors as size of tank, its location, toxicity of the chemical and applicable codes such as NFPA, OSHA, etc.

Aniline
Benzene
Carbon Tetrachloride
Chlorobenzene
Cyclohexanol
Cyclohexanone
Dibutylphthalate
Diesel Fuel
Dimethylamine
Ethyl Butyrate
Ethylene Chlorohydin
Fuel Oil
Furfural
Aliphatic Hydrocarbons (hexane, octane, hexene, octene, etc.)
Jet Fuel
Gasoline
Nitrobenzene
Octyl Cresol
Propylene Dichloride
Toluene
Xylene

The data/information presented in this publication, including recommendations, is based on information believed to be reliable. Such information is given without warranty, guarantee or representation as to its accuracy. Such information should be investigated by those using it. Polyethylene Specialty Company assumes no responsibility for the use of information contained herein and disclaims all liability in regard to such use.

POLYPROCESSING COMPANY
Providing Solutions Through Innovation

Chemical Resistance

Chemical Resistance

Chemical "resistance" and "compatibility" are synonymous terms used in relation to the ability of a plastic to function in different environments. In regards to polyethylene chemical storage tanks, chemical resistance encompasses the total effect a product would have on a tank. The factors that make up the overall compatibility of a chemical to a rotomolded tank are (1) chemical attack, (2) absorption or permeation, and (3) solubility and stress crack resistance.

Chemical Attack

By definition, chemical attack involves an actual chemical reaction with the plastic. This can be a breaking of molecular chains and/or an addition of chemical groups to the molecule. For example, in the case of an oxidation reaction with polyethylene, both occur with the addition of carbonyl groups. This causes and eventual loss of properties to the point that a tank would not be serviceable.

Polyethylene in general is one of the most inert plastics available. Very few chemicals react with polyethylene and with those that do, the rate is relatively slow. The ultra high molecular weight characteristics of high density crosslinked polyethylene resins after crosslinking makes these particular polyethylenes even more resistant than other grades.

Permeation

This involves the physical absorption of the chemical into the polyethylene. If this is a volatile chemical, then an actual loss of the product can occur as the chemical vaporizes from the outer wall of the tank. The amount of absorption is generally limited to 3 to 7 percent by weight of the polyethylene. Also, the loss of volatile products is relatively small. For example, a 25-gallon tank with a 50-mil wall will only lose between 5 and 6 grams of gasoline per day due to permeation. The thicker the wall, the lower the rate of loss.

The absorption of a product into the wall of a tank will cause more property changes. The tensile strength is reduced approximately 15 to 20 percent and stiffness approximately 20 percent. Normally, this does not affect the utility of a tank or prohibit the application. The property losses due to permeation are offset by increasing the design wall thickness of the tank.

Elevated Temperature

The effects of elevated temperature (100° F or greater) on polyethylene tank are predictable and expected. Polyethylene, which is a flexible material, becomes even more flexible when heated. It will, therefore, bulge more at an elevated temperature than at room temperature.

By looking at the design hoop stress values for various temperatures, one can see the effects of increased temperature services. The values remain relatively constant up to 100° F, after which they begin to decrease.

100° F	600 psi	130° F	450 psi
110° F	550 psi	140° F	400 psi
120° F	500 psi	150° F	300 psi

A rise in temperature of 50° F (100° F to 150° F) reduces the design hoop stress value from 600 psi to 300 psi and doubles the required wall thickness. It follows that simply increasing the service rating of a tank from 1.35 S.G. to 1.65 S.G., or even to 1.90 S.G. is not necessarily sufficient. The proper wall thickness must be calculated for the temperature of service.

The maximum temperature rating for crosslinked polyethylene material is 150° F. Above that temperature the thermal stabilizers in the plastic are more rapidly consumed. Continued use will cause embrittlement and a reduction in the useful life of the part. Temperature services from 100° F to 150° F are acceptable applications, however, thicker tank walls are required to maintain a safe design. Consult the factory when application such as these arise.

Authorized Distributor:

Toll-Free 1-866-590-6845
www.polyprocessing.com

Table I

The following chemicals do not attach or permeate high density crosslinkable polyethylene resins up to 100° F. Each application should be considered individually. All concentrations apply except where noted.

Acetic Acid
Aluminum Salts
Alum
Ammonium Hydroxide
Ammonium Salts
Amyl Alcohol
Antimony Salts
Arsenic Acid
Barium Hydroxide
Benzene Sulfonic Acid
Bismuth Salts
Boric Acid
Bromic Acid
Butanediol
Butyl Alcohol
Calcium Hydroxide
Calcium Salts
Chromic Acid<50%
Citric Acid
Copper Salts
Detergents
Diazo Salts
Diethyl Carbonate
Diethanol Amine
Diethylene Glycol
Diglycolic Acid
Dimethylamine
Dimethyl Formamide
Ethyl Alcohol
Ethylene Glycol
Ferric Salts
Ferrous Salts
Fluoboric Acid
Fluosilicic Acid
Formic Acid
Gallic Acid
Gluconic Acid
Hexanol
Hydrazone<35%
Hydrozine Hydrochloride
Hydriodic Acid
Hydrobromic Acid
Hydrochloric Acid
Hydrofluoric Acid
Hydrofluorosilicic Acid
Hydrogen Peroxide<52%
Hydrogen Phosphide
Hydroquinone
Hypochorous Acid
Iodine Solutions
Lactic Acid
Latex
Lead Acetate
Magnesium Salts
Mercuric Salts
Mercurous Salts
Mercury
Methyl Alcohol
Methylsulfuric Acid
Michel Salts
Nicotinic Acid
Nitric Acid<50%
Oxalic Acid
Perchloric Acid
Phenol<10%
Potassium Hydroxide
Potassium Salts
Phosphoric Acid
Photographic Solutions
Propyl Alcohol
Propylene Glycol
Sea Water
Selenic Acid
Sewage
Silicic Acid
Silver Salts
Soap Solutions
Sodium Ferricyanide
Sodium Ferrocyanide
Sodium Hydroxide
[1]Sodium Hypochlorite<9%
Sodium Salts
Sodium Sulfonates
Stanic Salts
Stannous Salts
Starch Solutions
Stearic Acid
[1]Sulfuric Acid <80%
Sulfurous Acid
Sugar Solution
Glucose
Lactose
Sucrose, etc.
Tannic Acid
Tanning Extracts
Tartaric Acid
Titinium Acid
Toluene Sulfonic Acid
Triethanolamine
Urea
Vinegar
Wetting Agents
Zinc Salts

[1]Concentrations above stated percentage require special considerations; contact factory for guidelines concerning these applications.

Table II

The following oils and organic chemicals do not attack HDXLPE resins. They will be absorbed into the wall of the tank; however, there should be no loss of chemical. Because of this absorption, no chemical other than the original should be stored in the tank as long as contamination may result as the absorbed oil is leached out. Storage at temperatures up to 100° F are possible provided the effects of the absorption on the properties of the tank are not prohibitive.

Fatty Acids	**Mineral Oils**	**Animal Fats**	**Vegetable Oil**
Butyric	Lube	Lard	Corn
Lauric	Transformer	Fish Oil	Coconut
Linoleic	Hydraulic	Musk Oil	Cottonseed
Oleic		Whale Oil	Olive
Palmitic			Peanut
Stearic			

Table III

The following organic chemicals do not attack high density crosslinkable polyethylene resins. They will be absorbed into the wall of tank and a permeation loss will occur. Because of this permeation and the effect it has on the physical properties of the tank, it is generally not recommended that these chemicals be storage at room temperatures above 100° F. However, their use largely depends on such factors as size of tank, its location, toxicity of the chemical, and applicable codes such as NFPA, OSHA, etc.

Anitine
Benzene
Carbon Tetrachloride
Chlorabenzene
Cychohexanol
Cycolohexnone
Dibutylphthalate
Diesel Fuel
Dimethylamine
Ethyl Butyrate
Ethylene Chlorohydin
Fuel Oil
Fufural
Aliphatic Hydrocarbons (hexane, octane, hexene, octene, etc.)
Jet Fuel
Gasoline
Nitrobenzene
Octyl Cresol
Propylene Dichloride
Toluene
Xylene

This document reports accurate and reliable information to the best of our knowledge, but our suggestions and recommendations cannot be guaranteed because the conditions of use are beyond our control. Information presented herein is given without reference to any patent questions which may be encountered in use thereof. Such questions should be investigated by those using this information. Poly Processing Company assumes no responsibility for the use of information presented herein and hereby disclaims all liability in regard to such use.

OR-1000™ Tank Systems!

Specify Peace of Mind!

NSF/ANSI 61

- OR-1000™ Engineered System
- 4 Times Antioxidants
- Certified for 31+ Hazardous and Corrosive Chemical Applications
- Design Temperatures to 140°F
- Complies with State Regulations

Provide Longer Tank Life with an IMFO®/OR-1000™ System!

Increase Tank Longevity!

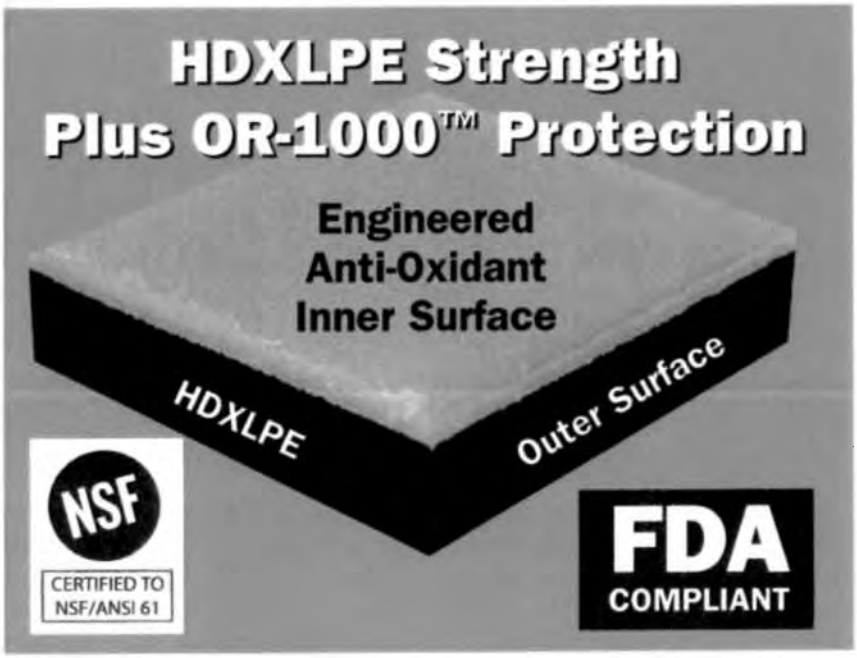

- Proven System since 1995
- Increased Chemical Resistance
- Complete Drain
- Maintenance Free
- Avoids Confined-Space Entry
- 4x Anti-Oxidant Package
- Sodium Hypochlorite/Sulfuric Acid/ Hydrochloric Acid applications*

*See warranty information on page 26

POLY PROCESSING COMPANY
Providing Solutions Through Innovation

Storage Solution: OR-1000 Liner

Poly Processing Company is the only rotational molding company with the ability to provide the strength, durability and safety of HDXLPE with the added value of an oxidation resistant liner, OR-1000, integrally molded as the interior surface of the part.

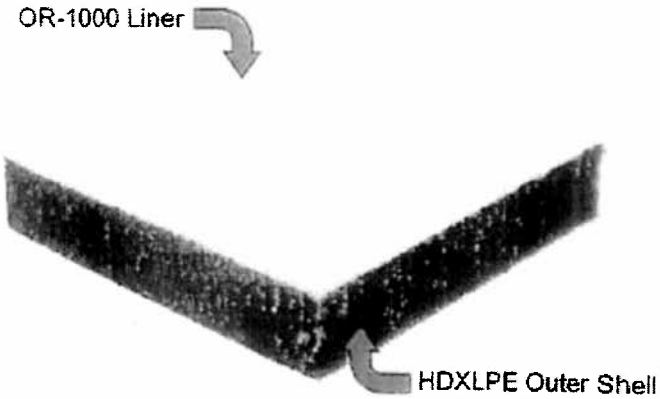

The liner thickness is in addition to the ASTM design thickness of the HDXLPE outer shell for the intended chemical application. This crosslink / OR-1000 combination has been successfully used for Sodium Hypochlorite and Sulfuric Acid services since 1995. To even further enhance the value of this combination, we are now adding this lining to the new high performance Metallocene High Density Crosslinked resin.

The reason for the OR-1000 material is simple. To develop the outstanding long-term properties of HDXLPE, the amount of anti-oxidants must be limited. Although HDXLPE has superior properties to any other rotational mold grade polyethylene, in a few highly oxidizing chemical applications, its optimum service life has not been obtained. To capitalize on the superior properties and performance characteristics of HDXLPE, the OR-1000 liner was developed to serve as an oxidation barrier to improve service life in oxidizing chemical applications. This combination provides unmatched performance and value to our customers.

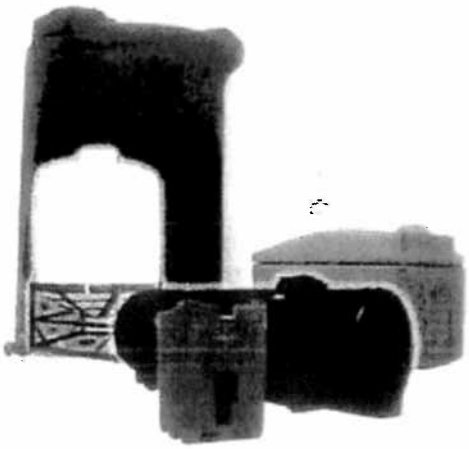

Sodium Hypochlorite and Sulfuric Acid remain very difficult storage and handling applications. However, we continue to bring you the very best in value, service and high performance products -- Poly Processing Company, *providing solutions through innovation.*

member

Authorized Distributor

THE CHLORINE INSTITUTE INC.
member

1-866-590-6845
www.polyprocessing.com

Rev. 3/2001

PROCESSING

Providing Solutions Through Innovation

Polyethylene Tank Life Expectancy

For 35 years, Poly Processing Company has been **Helping Our Customers . . . Solve Problems** associated with storing hazardous chemicals, **Managing Risk** with the Environment and Employee Safety and **Growing Their Profits** with Increased Tank Longevity and Operating Efficiencies. We have specialized in providing hazardous chemical storage solutions to the industrial, water and waste water markets. While we manufacture both linear and crosslink polyethylene storage tanks; in **hazardous chemical environments, crosslink polyethylene** is the material of choice. Our customers report crosslink polyethylene tanks providing service for 10+ years with 15 to 20 years of tank service being common. However; there are many factors and variables that have an effect on the useful life of any tank including polyethylene.

Chemical, Concentration and Temperature: The chemical, concentration and operating temperature are all factors influencing the life expectancy of a polyethylene tank. For example, high concentrations of Sulfuric Acid are stress cracking agents and are more aggressive oxidizers than less concentrated chemicals such as 25% Caustic Soda. For this reason, Poly Processing offers our customers the OR-1000™ Anti-Oxidant Systems. Another example: 12% Sodium Hypochlorite will degrade from UV exposure and elevated temperatures. As it degrades, sediment builds in the bottom of the tank leading to a shorter tank life. To eliminate this sludge buildup, Poly Processing Company offers our customers the IMFO® (Integrally Molded Flanged Outlet). The IMFO® design promotes continuous "system" flushing increasing tank life and operating efficiencies. Poly Processing Company chemical storage tanks are constructed from premium materials and designed specifically for the chemical, concentration and temperature requirements.

Installation and Piping: The single biggest reason for tank life reduction is improper tank installation and **"hard"** piping. Polyethylene's broad spectrum of chemical resistance vs. other materials of construction is based on its ability to expand and contract. Flexible connections compensate for tank expansion and contraction promoting a longer useful life. It is important to follow Poly Processing Company's Installation Manual Instructions during the installation process.

Venting: Often overlooked, venting is a very important step that promotes tank longevity. Polyethylene tanks are rated at atmospheric pressure/vacuum. Adequate vent size is always based on flow and delivery rates so it is important to gather the following information to adequately determine the proper venting requirements:

1) Is the tank to be filled pneumatically?
2) Is the tank to be vented to atmosphere?
3) Does the length of the vent exceed 3 feet (piped to a central vent system)
4) Is a fume scrubbing system to be used?
5) Are vent screens to be used (restricts flow)?
6) Does the tank manufacturer offer a method of "emergency venting" to prevent over-pressurization?

Other Items Effecting Tank Longevity:

1) Continuous cycling (fill / discharge)
2) Excessive agitation
3) Mobile applications

For further information about your specific needs or applications, please contact Poly Processing Company at 1-866-590-6845 or visit our website at www.polyprocessing.com.

POLYPROCESSING

Providing Solutions Through Innovation

Chemical Resistance

Chemical Resistance

Chemical "resistance" and "compatibility" are synonymous terms used in relation to the ability of a plastic to function in different environments. In regards to polyethylene chemical storage tanks, chemical resistance encompasses the total effect a product would have on a tank. The factors that make up the overall compatibility of a chemical to a rotomolded tank are (1) chemical attack, (2) absorption or permeation, and (3) solubility and stress crack resistance.

Chemical Attack

By definition, chemical attack involves an actual chemical reaction with the plastic. This can be a breaking of molecular chains and/or an addition of chemical groups to the molecule. For example, in the case of an oxidation reaction with polyethylene, both occur with the addition of carbonyl groups. This causes and eventual loss of properties to the point that a tank would not be serviceable.

Polyethylene in general is one of the most inert plastics available. Very few chemicals react with polyethylene and with those that do, the rate is relatively slow. The ultra high molecular weight characteristics of high density crosslinked polyethylene resins after crosslinking makes these particular polyethylenes even more resistant than other grades.

Permeation

This involves the physical absorption of the chemical into the polyethylene. If this is a volatile chemical, then an actual loss of the product can occur as the chemical vaporizes from the outer wall of the tank. The amount of absorption is generally limited to 3 to 7 percent by weight of the polyethylene. Also, the loss of volatile products is relatively small. For example, a 25-gallon tank with a 50-mil wall will only lose between 5 and 6 grams of gasoline per day due to permeation. The thicker the wall, the lower the rate of loss.

The absorption of a product into the wall of a tank will cause more property changes. The tensile strength is reduced approximately 15 to 20 percent and stiffness approximately 20 percent. Normally, this does not affect the utility of a tank or prohibit the application. The property losses due to permeation are offset by increasing the design wall thickness of the tank.

Elevated Temperature

The effects of elevated temperature (100° F or greater) on polyethylene tank are predictable and expected. Polyethylene, which is a flexible material, becomes even more flexible when heated. It will, therefore, bulge more at an elevated temperature than at room temperature.

By looking at the design hoop stress values for various temperatures, one can see the effects of increased temperature services. The values remain relatively constant up to 100° F, after which they begin to decrease.

100° F	600 psi	130° F	450 psi
110° F	550 psi	140° F	400 psi
120° F	500 psi	150° F	300 psi

A rise in temperature of 50° F (100° F to 150° F) reduces the design hoop stress value from 600 psi to 300 psi and doubles the required wall thickness. It follows that simply increasing the service rating of a tank from 1.35 S.G. to 1.65 S.G., or even to 1.90 S.G. is not necessarily sufficient. The proper wall thickness must be calculated for the temperature of service.

The maximum temperature rating for crosslinked polyethylene material is 150° F. Above that temperature the thermal stabilizers in the plastic are more rapidly consumed. Continued use will cause embrittlement and a reduction in the useful life of the part. Temperature services from 100° F to 150° F are acceptable applications, however, thicker tank walls are required to maintain a safe design. Consult the factory when application such as these arise.

Crosslinked Polyethylene with OR-1000™ System
The #1 System for Oxidizing Chemical Environments

Poly Processing Company and other polyethylene tank manufacturers, as well as major polyethylene resin manufacturers have published many documents over the past several years discussing the benefits of certain rotational molding resins in acidic and alkaline chemical environments. The majority of these documents support the use of crosslinked polyethylene over linear polyethylene in acidic and basic chemical environments. These articles speak to the longevity of crosslinked polyethylene rotationally molded tanks, the safety of having polymer chains that are chemically bonded, and the leveraged investment of knowing that crosslinked polyethylene chemical storage tanks have been utilized for the last 35 years.

In 2001, one of the largest resin manufacturers in North America published a fairly extensive study which showed that their linear polyethylene in a lab environment performed as well as, if not better than crosslinked polyethylene, in acidic and alkaline chemical applications. This study, coupled with marketing efforts by linear polyethylene tank manufacturers who do not rotationally mold crosslinked polyethylene tanks in the course of their normal business, has given rise to some industry confusion and misunderstanding about what is the best resin system for storing oxidizing chemicals. We will summarize the facts about rotationally molded polyethylene storage tanks and the value of an engineered antioxidant resin system coupled with the long-term performance of crosslinked polyethylene.

We would first like to discuss the lab study performed by the linear resin manufacturer. The study compared crosslinked polyethylene with linear polyethylene in sulphuric acid and sodium hypochlorite environments. The sulphuric acid was concentrated approximately 93%-97%, and the Sodium Hypochlorite was around 14% concentration. The lab study describes how the crosslinked polyethylene and linear polyethylene were submersed in the chemicals and then tested using ARM Impact testing as well as Environmental Stress Crack Resistivity (ESCR) testing. The study concluded that the linear materials in a chemical resistivity mode held up as well as crosslinked materials in a lab environment. In addition, Higher ESCR properties are found in lower density materials like LLDPE or LDPE as compared to HDPE resins. It doesn't mean you want to use a tank made only from the lower density resins. ESCR shows how well the material performs in a pre-notched condition in the presence of certain chemicals.

The lab study performed by the resin manufacturer did not cover or discuss the long-term properties of these materials in harsh, environmental conditions. Over time, sodium hypochlorite and sulphuric acid create an oxidative environment, which remove hydrogen molecules from the polymer chains creating embrittlement. This phenomenon is inherent to all types of polyethylene, since they are hydrocarbon based molecules. Storing acids and bases in actual everyday environments presents a completely different set of parameters and stresses that have little to do with the lab environment.

Poly Processing Company has been aware of this relationship between ESCR and Chemical resistance for many years and has been an industry leader in creating engineered resin systems which give the end user the ability to have excellent oxidation and chemical resistivity without sacrificing long term performance and toughness. These engineered resin systems deliver peace of mind, a margin of safety, and leveraged investment to the end user.

Another critical factor to consider when storing acids and bases in actual everyday environments is the Long Term Hydrostatic Strength (LTHS) of the polyethylene. LTHS properties are one of the keys to providing the continued strength necessary for tanks during its service life. This property is especially important in field applications where tanks can see elevated temperatures approaching

140°F. LTHS tests are conducted at both ambient temperature (73°F) and at elevated temperature (140°F) since actual field conditions are typically in this range.
Figure 1.

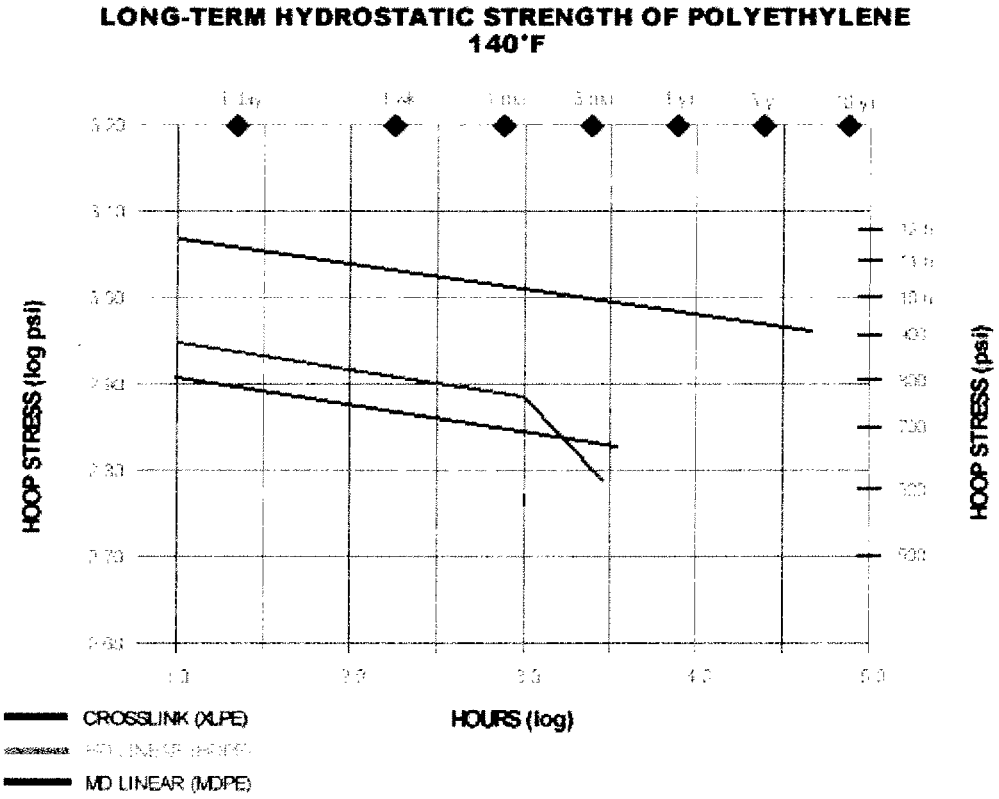

Source: Chevron Phillips Company, Plastics Technical Center

The rapid deterioration in properties is indicated by a "knee" in the curve of hoop strength versus time as illustrated in Figure 1 above. Even high performance HDPE will develop a LTHS knee at around 1000 hours (log 3), and some MDPE products will have a knee in less than 10,000 hours (log 5). This type of performance substantially reduces the expected long-term performance at elevated temperatures. Crosslinked polyethylene has been tested to 50,000 hours at 140°F and shows no signs of a knee.

There is still the need to surround the oxidation resistant material with a robust resin system that will give you longer useful tank life, superior impact resistance, and greater tensile strength for a safer product. That is why crosslinked polyethylene is still the material of choice for industrial and municipal chemical applications.

Poly Processing Company has been the leader in rotationally molded crosslinked polyethylene storage tanks for 35 years. We work with the leading universities in the country to develop engineered resin systems that will perform above and beyond any standard "off the shelf" polyethylene in harsh, oxidizing environments. One of the systems we developed is the OR-1000™ system. This system uses the best linear resin for chemical resistivity combined with four (4) times the antioxidant power and a crosslink outer wall for maximum long-term performance and durability.

Poly Processing Company developed the OR-1000™ oxidation resistance system in 1995. This lower density linear material serves to increase the service life of crosslinked polyethylene tanks in oxidizing chemical service (Sodium Hypochlorite, Sulphuric Acid, Hydrochloric Acid, and Nitric Acid). To develop the outstanding long-term physical properties of crosslinked polyethylene, the amount of antioxidant compounded into the material has to be limited. Although crosslinked polyethylene has superior properties to any other rotational molding grade polyethylene, the tank's useful service life will be reduced without the OR-1000™ system. In order to utilize the superior properties of crosslinked polyethylene, the OR-1000™ system was developed to greatly improve the service life in harsh oxidizing chemical environments. This material is a medium density linear based resin with a large amount of antioxidant added to it for the best oxidizing resistance system in the industry. The OR-1000™ system has been engineered to prevent de-lamination during the useful life of the tank.

To compare the effect of oxidizing chemicals on the OR-1000™ system and crosslinked polyethylene, 1/8" thick tensile bars of both OR-1000™ and crosslinked polyethylene were submerged in a manufacturer's storage tank. This tank handled a highly oxidizing chemical, 17% Sodium Hypochlorite, and was emptied and filled at least once a day. Every 30 days, samples were pulled and tensile and percent elongation was determined as well as ESCR tests. Oxidization or reduction in physical properties is indicated by reduced in elongation. After six months of testing, the elongation of the crosslinked polyethylene tensile bars had decreased 26% while OR-1000™ elongation had no change. This is due to the added antioxidant in the OR-1000™ system as well as the fact that the linear material used in the testing was a lower density material than the crosslinked material.

Crosslinked polyethylene provides superior environmental stress cracking resistance (ESCR) or sometimes generally referred to as resistance to slow crack growth (SCG) in almost all chemical applications. Two tests which clearly show this difference are the bent strip ESCR (ASTM D1693) with 10% Igepal where crosslink polyethylene does not fail in over 1000 hours compared to typical values for LMDPE of <400 hours. Another test which shows the slow crack growth difference with no surfactant (in air) is the polyethylene notch test (PENT) described in ASTM F 1473 and crosslink polyethylene again does not fail in over 1000 hours and LMDPE grades fail in <100 hours. Even though linear polyethylene grades with improved ESCR have become available over the past 10 to 15 years, they still do not match crosslinked polyethylene in SCG performance. Slow crack growth resistance as was shown earlier in this paper is an important property that can affect the long-term performance of tanks.

The best of both worlds is having the OR-1000™ system for the long-term oxidative resistivity characteristics (as discussed in the resin manufacturer's lab study), with the robustness of crosslinked polyethylene for the long-term durability and long useful life that is expected of industrial grade chemical storage tanks. This is why so many chemical manufacturers and distributors choose Poly Processing Company for engineered chemical storage solutions.

Crosslinked polyethylene tanks with the OR-1000™ system varying in sizes from 500 gallons to 14,950 gallons have been in true industrial and municipal use for over 10 years with excellent results. Poly Processing Company backs every crosslinked polyethylene tank with the OR-1000™ system with a 5 year full warranty on all suitable applications including sodium hypochlorite and hydrochloric acid, sulfuric acid 80%-98% carries a full 3 year warranty

Store your harsh oxidizing chemicals with the confidence and peace of mind that you deserve. Specify Poly Processing Company's crosslinked polyethylene tanks with the OR-1000™ system for longevity, safety, and leveraged investment. Please consult your distributor or Poly Processing Company at 1-866-590-6845 for your specific requirements.

tobeywade
STRUCTURAL ENGINEERS

October 2, 2009
Project No. R115-07-08

Mr. Tom Nelson
PHILIP SERVICES CORPORATION
ENVIRONMENTAL SERVICES DIVISION
2095 Newlands Drive East
Fernley, NV 89408

RE: PLANNED TANK 208 CERTIFICATION REPORT

Dear Mr. Nelson:

In accordance with the Fernley Facility Amended Tank Replacement plan as prepared by PSC and dated March 25, 2008, each tank is required to be certified by Independent Registered Professional Engineers (IRPE's) prior to being placed into service. This letter has been prepared to document the evaluation of Planned Tank 208 as performed by Tobey-Wade Consulting.

Background

Planned Tank 208 will be a Crosslinked Polyethethylene Tank as manufactured by Poly Processing Company and with a 6,250 gallon capacity. Poly Processing has provided data relative to the tank's strength and its chemical resistance capabilities.

Schiff Associates has evaluated the tank's suitability and compatibility for its proposed use in PSC's facility. Their conclusions have been provided under separate cover to PSC.

Findings

Based on our analysis, the following systems are hereby certified as being in compliance with the Amended Tank Replacement plan:

- Planned Tank 208 will be situated on a reinforced concrete foundation system which is capable of adequately supporting the tank and its contents under static and dynamic conditions.
- Planned Tank 208 will be located in an area with sufficient secondary containment as required by 40 CFR Ch. I, 264.193.
- Planned Tank 208 will be stabile against overturning when subjected to loads based on 2006 International Building Code level seismic events.

ADDITION DATE 10/09/09
REVISION NUMBER 1

NEVADA OFFICE
329 FLINT STREET ■ RENO, NEVADA 89501 ■ TEL: (775) 324.7757 ■ FAX: (775) 324.7797

- Planned Tank 208 will be anchored to prevent sliding when subjected to loads based on 2006 International Building Code (IBC) level seismic events. Structural Observation and Special Inspection of the anchorage system will be performed as required by the IBC.

Structural Observation will be provided by Tobey-Wade Consulting under my direct supervision. Special Inspections will be performed by ICC-certified inspectors based on anchorage requirements provided by Tobey-Wade Consulting.

Certification Statement

I certify under penalty of law that this report and all attachments were prepared under my direction and supervision in accordance with a system developed to assure that qualified personnel properly gather and evaluate the information submitted. Based on my inquiry of the person or persons who manage the system or those persons directly responsible for gathering the information, the information, submitted is, to the best of my knowledge and belief, true, accurate, and complete. I am aware that there are significant penalties for submitting false information, including the possibility of fines and imprisonment for knowing violations.

This report has been prepared in accordance with acceptable engineering practices and is subject to the assumptions and limitations stated in the report. Also note that this certification covers the aforementioned aspects of Tank 208 only.

Please feel free to contact me at your convenience should you have any questions relating to our findings.

Sincerely,
TOBEY-WADE CONSULTING

Terrence R. Tobey

Terrence R. Tobey, S.E.
Principal Structural Engineer

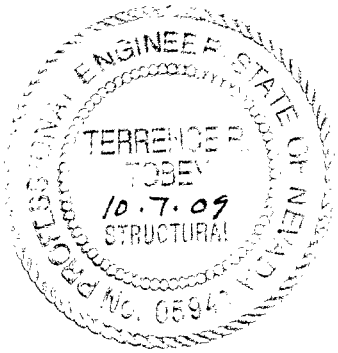

Exp.
6.30.10

ADDITION DATE 10/09/09

REVISION NUMBER 1

NON-CONTROLLED COPY
INFORMATION SUBJECT TO CHANGE WITHOUT NOTICE
VERIFY REV LEVEL OF PAPER COPY WITH REV LEVEL ON PPC WEB SITE

Proposed Storage Tank

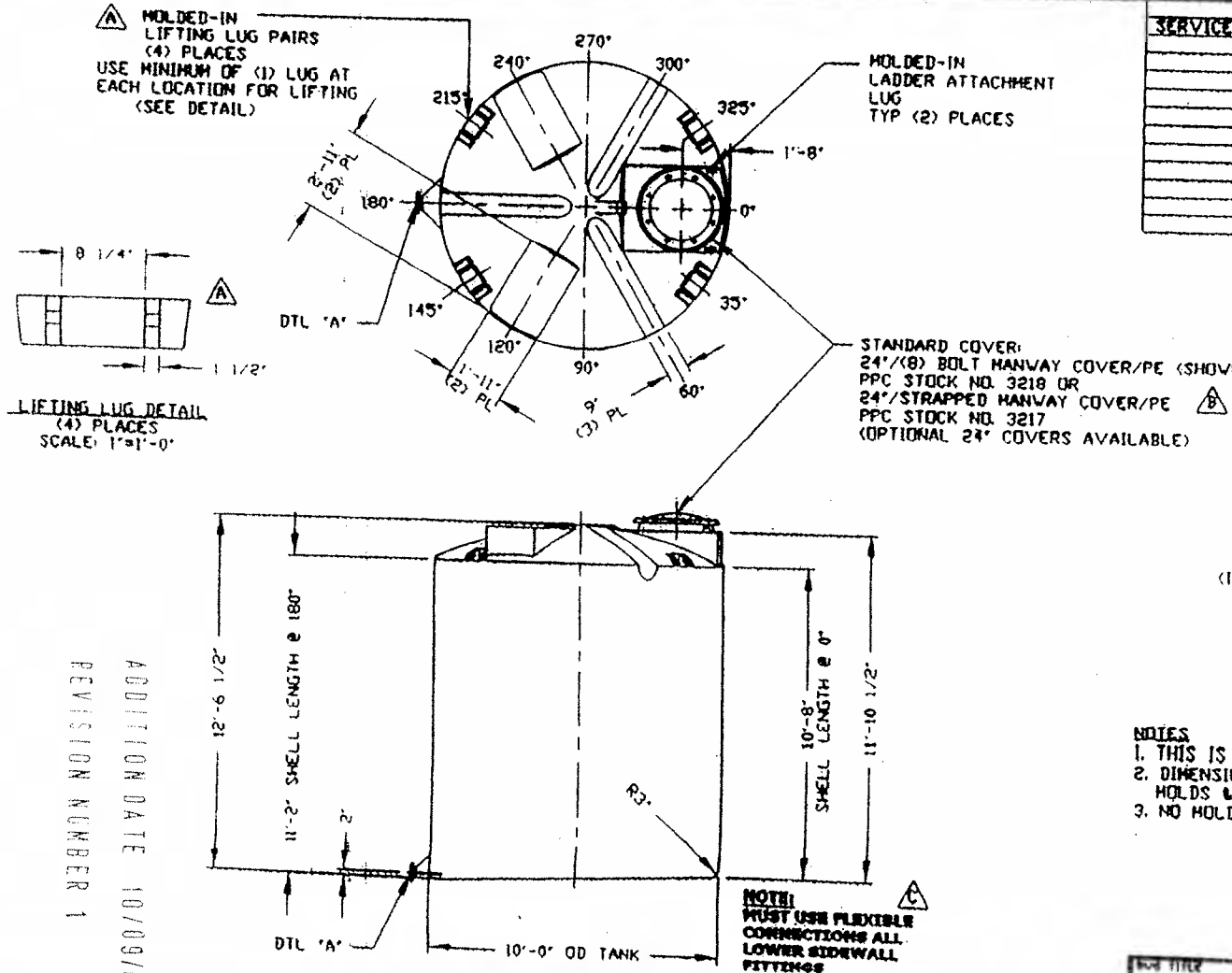

NOZZLE SCHEDULE & ACCESSORIES

SERVICE	MK	STOCK NO	SIZE	FITTING	DEG	ELEV

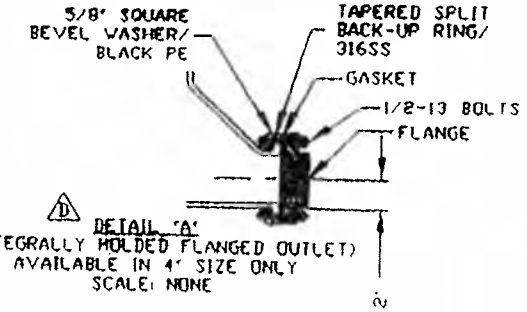

NOTES
1. THIS IS A COMPUTER GENERATED DWG. DO NOT REVISE BY HAND.
2. DIMENSIONS WILL VARY ±3% DUE TO VARIATIONS IN MULTIPLE MOLDS & CONDITIONS PREVALENT DURING MANUFACTURE & USAGE.
3. NO MOLDED IN GALLONAGE MARKERS THIS TANK.

CALCULATED CAPACITIES/ VOLUME IN U.S. GALLONS		
DESIGN CAPACITY	DOME VOLUME	TOTAL VOL
6283	470	6753

CONFIDENTIAL PROPERTY OF POLY PROCESSING COMPANY NOT FOR REPRINT OR USE WITHOUT PERMISSION

ADDITION DATE 10/09/08
REVISION NUMBER 1

REV "E" REVISED FOR MOLD MODIFICATIONS BY:JB 6/16/053 CK:WH
REV "D" REVISED INFO STYLE BY:JB 4/30/03 CK:WH
REV "C" ADDED FITTING NOTE BY:JB 3/3/02 CK:HBW
REV "B" REVISED STOCK NUMBER BY:JB 3/3/02 CK:HBW
REV "A" ADDED LIFTING LUGS & DETAIL BY:JB 10/01/02 CK:WH

DWG TITLE: 6250 GALLON SLOPE BOTTOM IMFO TANK

SCALE: 1/4"=1'-0"
DATE: 3/17/00
PolyProcessing Company
Western Region
BY: HB WILKERSON
CK: D. RECTOR
SHEET: 1 OF 1
COMPUTER FILE: 11206250
REV: C

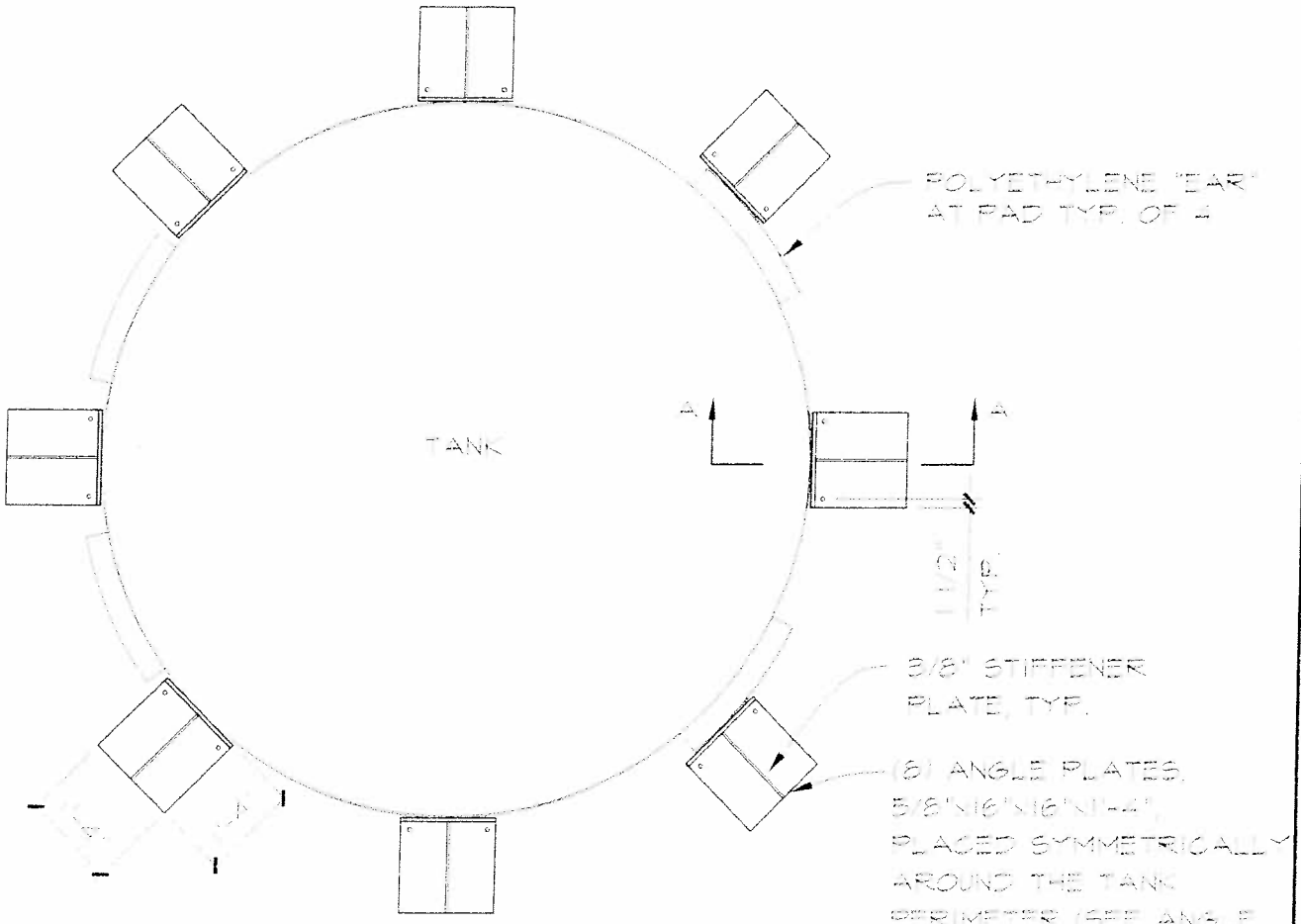

TANK NO's 201 - 208
CYLINDRICAL FLAT BOTTOM TANK
SCALE: 3/8"=1'-0"

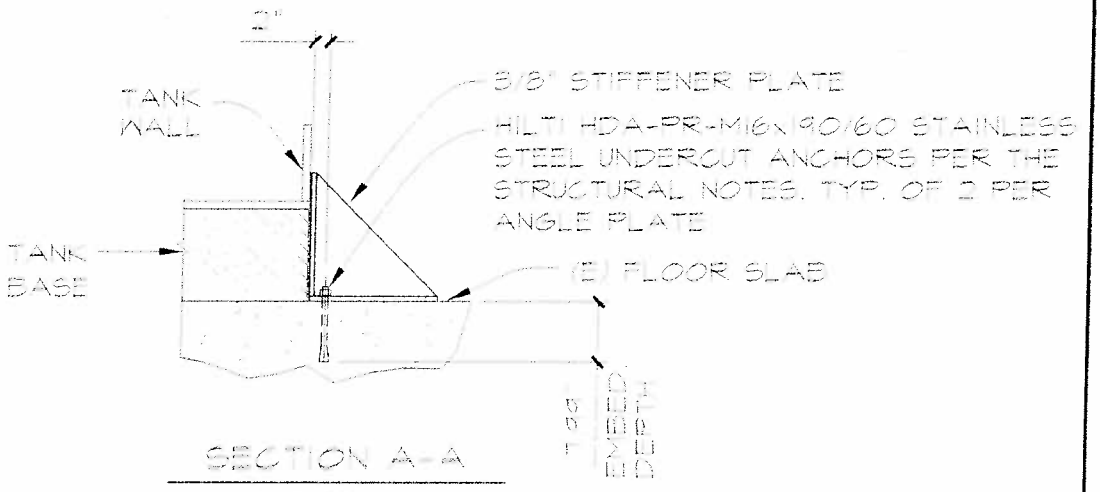

SECTION A-A
N.T.S.

tobey **wade**
CONSULTING
329 Flint Street
Reno, Nevada 89501
Tel. (775) 324-7757 Fax (775) 324-7797

PHILIP SERVICES CORPORATION
FERNLEY FACILITY
TANK NO's 201-208
ANCHORAGE DETAILS
FERNLEY, NEVADA

Project No.
R115-07-08

ADDITION DATE 10/09/09
Date: OCT. 5 2009
REVISION NUMBER 1

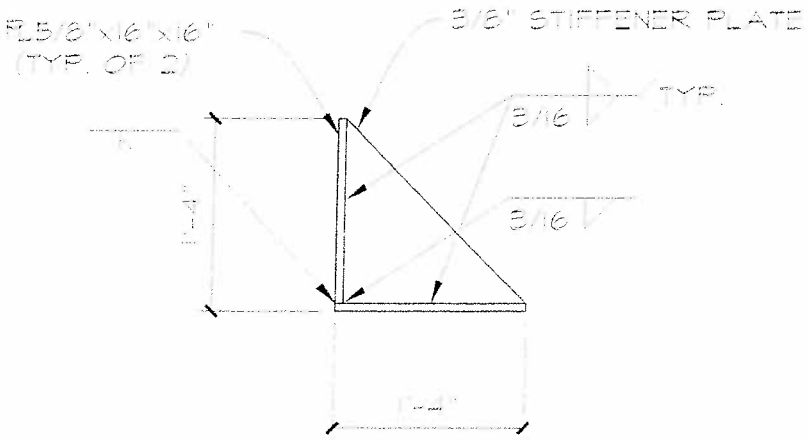

ANGLE PLATE DETAIL

SCALE: 3/4" = 1'-0"

tobey **wade**
CONSULTING
329 Flint Street
Reno, Nevada 89501
Tel. (775) 324-7757 Fax (775) 324-7797

PHILIP SERVICES CORPORATION
FERNLEY FACILITY
TANK NO's 201-208
ANCHORAGE DETAILS
FERNLEY, NEVADA

Project No.
R115-07-08

ADDITION DATE 10/09/09
REVISION NUMBER 1
Date: OCT. 5, 2009

TREATMENT TANKS

TANK DATA SHEET

RCRA-Regulated? **YES**
Tank Location: **DETOX ROOM**
Tank Name: **TREATMENT TANK**
Tank Numbers: **T - 1, T - 2, T - 3**
Process Description: **WASTE NEUTRALIZATION, TREATMENT**
Vessel Fluid: **AQUEOUS-BASED WASTE LIQUIDS**
Specific Gravity: **≤ 1.50** Freeboard At Working Vol (ft^3): **1' – 0"**
Normal Operating Pressure (psig): **ATMOSPHERIC** Temperature (°F): **AMBIENT**

	Material	Thickness	Type
Bottom	CARBON STEEL PLATE	5/16" NOMINAL	FLAT
Shell	CARBON STEEL PLATE	5/16" NOMINAL	STRAIGHT
Roof	CARBON STEEL PLATE	¼" NOMINAL	FLAT, BOLTED

Working Volume (USG): **6,125 GALLONS** Insulation: **NONE**
Nominal Volume (USG): **7,000 GALLONS** Method of Construction: **WELDED STEEL**
Tank I.D. (ft): **6'-6" x 18'-0"** Tank Height or Length (ft): **8' – 0"**
Design Code Used: **2006 IBC** Date in Service: **PLANNED Tanks**
Anchorage: **BOLTED TO CONCRETE. Anchorage designs per 2006 IBC.**

Connections

Item No.	Size (In.)	Gasket	Description
1	24"		ROOF MANWAY
2	4"		SIDE FLANGE NOZZLE
3	3"		FILL NOZZLE
4	8"		MIXER NOZZLE
5	4"		VENT FLANGE NOZZLE
6	4"		FLANGE ROOF NOZZLE
7	3"		FLANGE ROOF NOZZLE
8	2"		LEVEL SENSOR CONN.
9	1 ½"		FLANGE NOZZLES (3)
10			
11			
12			
13			
14			
15			

Tank Sketch

Interior Coating: **POLYSPEC VINYL ESTER NOVOLAC SYSTEM.**
Exterior Coating: **BASECOAT EPOXY, TOPCOAT POLYURETHANE ENAMEL.**
Tank Mfger: **to be determined.**
Remarks: **Planned tanks for replacement of existing tanks T-1, T-2, and T-3.**

SCHIFF ASSOCIATES

gbell@schiffassociates.com

www.schiffassociates.com
Consulting Corrosion Engineers – Since 1959

October 6, 2009 via email to: Burgess, Aubry [ABurgess@pscnow.com]

PSC ENVIRONMENTAL SERVICES
2095 Newlands Drive E
Fernley, NV 89408

Attention: Mr. Aubry Burgess
Maintenance Supervisor

Re: **Compatibility Certification for Planned Replacement Tank T-1**
for Treatment of Waste Corrosives
Amended Tank Replacement Plan
Fernely, NV
SA#08-1334LGL

Dear Mr. Burgess:

We review information relating to the planned replacement for Tank T-1. The planned replacement will be a coated and lined steel tank. The tank may or may not have a steel top and our recommendations include both alternatives.

Based on this information we have been provided about the historic and planned waste streams, we have determined that the internal surfaces of the planned replacement steel tank should be lined with PermaRez 333, a 120 mil heavy-duty lining system for steel substrates, combines vinyl ester novolac resin, inert mineral fillers and fiberglass or synthetic reinforcement to produce a dimensionally stable liner suited for immersion and splash/spillage exposure of concentrated acids and aggressive solvents. The compatible PolySpec 310 (primer) and PolySpec731 (non-sag gel) should be used for building a smooth cove in the transition between floor, shell and any transitions or corners. The cove will take the strain of a "hard angle" transition out of the coating system during the flex period created when head pressures and temperatures cause the steel to move. Product datasheets and specifications for the PermaRez 333 system and its components are attached.

If the tank has an open top, then the exterior of the tank should be encapsulated/coated with the same material as the lining (PermaRez 333). If a fixed roof is used, then the exterior coating systems should be a Sherwin Williams Macropoxy 646 with a Urethane top coat of Poly Lon HP also by Sherwin Williams. Exterior Film Thickness should be 4 to 6 mils DFT each of Macropoxy 646 (two coats) and 2 to 4 mils each Poly Lon HP (1

ADOPTION DATE 10/09/09

REVISION NUMBER 1

coat) with a target total exterior dry film thickness of 10 mils. Product data sheets for these exterior coatings for fixed roof tanks are attached.

As with all high-performance lining and coating systems, quality assurance and control during application is critical to service performance. We recommend full-time third-party inspection by Level III certified NACE International Coating inspectors.

I certify that based on the information provided to me that the above recommended liner system is suitable for the waste processing stream of the PSC Facility as configured and intended per the Amended Tank Replacement Program outlined in the letter from Thomas Nelson of PSC to Nevada Division of Environmental Protection dated March 25, 2008.

CERTIFICATION

I certify under penalty of law that this document and all attachments were prepared under my direction or supervision according to a system designed to assure that qualified personnel properly gather and evaluate the information submitted. Based on my inquiry of the person or persons who manage the system, or those persons directly for gathering the information, the information submitted is, to the best of my knowledge and belief, true, accurate, and complete. I am aware that there are significant penalties for submitting false information, including the possibility of fine and imprisonment for knowing violations.

CLOSURE

Our services have been performed with the usual thoroughness and competence of the engineering profession. No other warranty or representation, either expressed or implied, is included or intended.

Sincerely,
SCHIFF ASSOCIATES

GRAHAM E.C. BELL
EXP. 12-31-10
MECHANICAL

Graham E.C. Bell, PE
Principal Engineer
NACE International Corrosion Specialist #5350

Attachments: PermaRez 33, FlakeRex 304, PolySpec 310, PolySpec 731 Tech Data Sheets
General Specification for Lining Steel Tanks with PermaRez
Macropoxy 646, Polylon HP Ployurethane Tech Data Sheets and MSDS

ADDITION DATE 10/09/09
REVISION NUMBER 1

LINER INFORMATION
PLANNED TANKS T-1 THRU T-5
8 SHEETS

PermaRez® 333

TECHNICAL DATA SHEET

Reinforced Lining for Concrete & Steel, Acid & Solvent Resistant

DESCRIPTION

PermaRez 333, a 120 mil heavy-duty lining system for concrete and steel substrates, combines vinyl ester novolac resin, inert mineral fillers and fiberglass or synthetic reinforcement to produce a dimensionally stable liner ideally suited for immersion and splash/spillage exposure of concentrated acids and aggressive solvents.

TYPICAL APPLICATION

• Primer	PolySpec 310 (steel) / 320 (concrete) @ 2–3 mils DFT
• Detail Preparation	PolySpec 731
• Basecoat	PermaRez 333 w/F-4 Powder @ 50–60 mils
• Fabric	Type W (10 oz. woven-roving)
• Saturant	PermaRez 333 @ 25 mils
• Topcoat	PermaRez 333 w/F-4 Powder @ 50–60 mils PolySpec Smoothing Liquid #1
• Options	Carbon-Filled, Non-Silica Applications (recommended for fluoride or caustic service) – Powder: F-5 Powder – Fabric: Type V (Nexus Veil)

PERFORMANCE DATA

Compressive Strength (ASTM C-579)	12,000 psi
Tensile Strength (ASTM C-307)	3,000 psi
Flexural Strength (ASTM C-580)	12,500 psi
Hardness, Shore D (ASTM D-2240)	85–90
Bond Strength (ASTM D-4541)	425 psi
Abrasion Resistance (ASTM D-4060)	100 mg
Operating Temperature, maximum ...Dry:	350–400°F
...Wet: Dependant on chemical exposure	
VOC	1.58 lb/gal; 190 gm/L

STORAGE & INSTALLATION

Storage Environment	Dry area, 65–80°F
Application Temperature, ambient	50–95°F
Application Temperature, substrate	Minimum 5°F above dew point
Shelf Life, PROVIDED STORAGE ENVIRONMENT GUIDELINES ARE FOLLOWED	60 days
Pot Life, @ 77°F	35 minutes
Full Service, @ 77°F	7 days

Material cures more slowly at cooler temperatures, and working time will be substantially reduced at higher temperatures. In hot weather, material should be cooled to 65°F to 80°F prior to mixing and application to improve workability and avoid shortened pot life. The data shown above reflects typical results based on laboratory testing under controlled conditions. Reasonable variations from the data shown above may result.

CONSIDERATIONS & LIMITATIONS

1. For best results, work area should be humidity and temperature controlled.
2. Work area must be well ventilated. Fresh air fed respirators are recommended when working with this product.
3. Do not thin with solvents unless advised to do so by PolySpec.
4. Confirm product performance in specific chemical environment prior to use.
5. Prepare substrate according to "Surface Preparation" portion of this document.
6. Do not apply to slabs on grade unless a heavy unruptured vapor barrier has been installed under the slab.
7. Always use protective clothing, gloves and goggles consistent with OSHA regulations during use. Avoid eye and skin contact. Do not ingest or inhale. Refer to Material Safety Data Sheet for detailed safety precautions.
8. For industrial/commercial use. Installation by trained personnel only.

BENEFITS

- *Excellent resistance to aggressive acids, alkalies and solvents; withstands attack from 75% sulfuric acid, 37% hydrochloric acid and 100% phosphoric acid*
- *Seamless, high tensile strength composite*
- *Extremely low permeation rate; superior performance to acid-proof brick*
- *Excellent dimensional stability; withstands wide temperature range*
- *Temperature resistant: Wet 220°F / Dry 400°F*
- *Superior compatibility with concrete and steel when compared with conventional coatings*

RECOMMENDED USES

- *Steel process and storage tanks*
- *Concrete waste treatment sumps*
- *Trenches, pedestals, curbs*
- *Secondary containment*
- *Truck loading/unloading areas*
- *Chemical pump pads*

GENERIC DESCRIPTION

Vinyl Ester Novolac

STANDARD COLORS

Gray
(Amber liquid, before addition of Powder)

PACKAGING

5-Gallon Unit

Filler Powder sold separately; per 5-Gallon Unit:
- *125 pounds F-4 Powder, sold in 50 lb bags*
- *30 pounds F-5 Powder, sold in 30 lb pails*

Fabric sold separately:
- *Type W (10 oz cloth) sold in 2,231 ft² rolls*
- *Type V (Nexus Veil) sold in 6,000 ft² rolls*

PolySpec 731 and PolySpec Smoothing Liquid #1 sold separately

COVERAGE

15 ft² / gallon @ 120 mils
(Includes two 60 mil coats and saturant)

SEE SYSTEM DETAILS IN "TYPICAL INSTALLATION" PORTION OF THIS DOCUMENT

SURFACE PREPARATION

Concrete: Apply only to clean, dry and sound concrete substrates that are free of all coatings, sealers, curing compounds, oils, greases or any other contaminants.

- *New concrete should be cured a minimum of 28 days.*
- *Concrete that has been contaminated with chemicals or other foreign matter must be neutralized or removed.*
- *Remove any laitance or weak surface layers.*
- *Concrete should have a minimum surface tensile strength of at least 300 PSI per ASTM D-4541.*
- *Surface profile shall be CSP-3 to CSP-5 meeting ICRI (International Concrete Repair Institute) standard guideline #03732 for coating concrete, producing a profile equal to 60-grit sandpaper or coarser. Prepare surface by mechanical means to achieve this desired profile.*
- *Moisture vapor transmission should be 3 pounds or less per 1,000 square feet over a 24 hour time period, as confirmed through a calcium chloride test, as per ASTM E-1907. Quantitative relative humidity (RH) testing, ASTM F-2170, should confirm concrete RH results <75%.*
- *All surface irregularities, cracks, expansion joints and control joints should be properly addressed prior to application.*
- *Outgassing may occur due to the porosity of some concrete surfaces. To reduce the effect of outgassing, the primer and coating should be applied when the temperature of the concrete substrate is dropping. This usually occurs in the evening; however, the concrete substrate temperature should be measured with a surface thermometer for verification. Double priming will greatly reduce the effects of outgassing by additionally filling the pores in the concrete.*

Steel: For immersion service, "White Metal" abrasive blast with an anchor profile of 2–4 mils in accordance with Steel Structures Painting Council Specification SP-5-63 or NACE No. 1 is required. For splash and spillage exposure, "Near White" SP-10-63 or NACE No. 2 is required.

Refer to PolySpec Surface Preparation Guidelines for more details.

INSTALLATION STEPS

1. Prime surface with PolySpec 310 (steel) or PolySpec 320 (concrete) Primer. See data sheet for application details.
2. Use PolySpec 731 to round the corner radius of vertical to horizontal transitions, to smooth weld seams, and to patch holes and irregularities. See data sheet for application details.
3. Pour Hardener #3 into PermaRez 333 Resin pail. Mix thoroughly using a jiffy-type mixer operated at low speed until a proper blend is attained. Scrape the sides of the pail to ensure the product has been properly mixed; any unmixed material left on the side of the pail will not cure.

   NOTE: Mix ratio is 2.5 ounces Hardener #3 to one gallon PermaRez 333 Resin.
4. Stir in F-4 or F-5 filler powder and mix well until all particles are wetted out.

   NOTE: Mix ratio is approximately 25 pounds F-4 (or 6 pounds F-5) filler per mixed gallon of binder.
5. Spread basecoat mixture onto surface by trowel to a thickness of 1/16". Immediately lay the reinforcement fabric into the basecoat and press out all air pockets with a dry paint roller.
6. Saturate the reinforcement with a coat of catalyzed PermaRez 333 Resin (without powder). Roll out saturant coat until the whiteness of the reinforcement disappears.
7. After the saturated basecoat has dried, grind down any burrs that have appeared on the surface.
8. Spread topcoat mixture (PermaRez 333 with filler powder) with a steel trowel as evenly as possible to a thickness of 1/16".

   NOTE: Recoat time over saturant coat is normally 24 hours.
9. Before topcoat is allowed to dry, smooth with a paint brush dipped lightly in PolySpec Smoothing Liquid #1.
10. For best results, clean tools and equipment with PolySpec® All Purpose Cleaner, a nonflammable and non-evaporating cleaner. Always wear gloves when using this product.

1 gal R: 2.5 oz H / DOC PR333-TDS Rev 04/08

PermaRez and PolySpec are ® Registered Trademarks of PolySpec L.P.

© Copyright 2005 PolySpec L.P. All rights reserved. Published technical data and instructions are subject to change without notice. Please visit the online catalog at www.polyspec.com for the most current technical data and instructions. Or, you may contact your PolySpec representative for current technical data and instructions.

PolySpec, L.P. warrants its products to be free from defects in material and workmanship. PolySpec's sole obligation and Buyer's exclusive remedy in connection with the products shall be limited, at PolySpec's option, to either replacement of products not conforming to this warranty or credit to Buyer's account in the invoiced amount of the nonconforming products. Any claim under this Warranty must be made by Buyer to PolySpec in writing within five days of Buyer's discovery of the claimed defect, but in no event later than the expiration of the applicable shelf life, or one year from the delivery date, whichever is earlier. Buyer's failure to notify PolySpec of such nonconformance as required herein shall bar Buyer from recovery under this warranty.

PolySpec makes no other warranties concerning this product. No other warranties, either expressed or implied, or statutory, such as warranties of merchantability or fitness for a particular purpose, shall apply. In no event shall PolySpec be liable for consequential or incidental damages.

Any recommendation or suggestion relating to the use of the products made by PolySpec, whether in its technical literature, or in response to specific inquiry, or otherwise, is based on data believed to be reliable; however, the products and information are intended for use by Buyers having requisite skill and know-how in the industry, and therefore it is for the Buyer to satisfy itself of the suitability of the products for its own particular use, and it shall be deemed that Buyer has done so, at its sole discretion and risk. Variation in environment changes in procedures of use, or extrapolation of data may cause unsatisfactory results. PolySpec cannot guarantee that color will conform to sample, if provided.

FlakeRez® 304

TECHNICAL DATA SHEET

Concrete & Steel Coating, Graphite Flake-Filled, Fluoride Resistant

DESCRIPTION

FlakeRez 304, a two component, graphite flake-filled vinyl ester novolac resin coating for primary and secondary containment, resists higher concentrations of acids and solvents where most other coatings fail. FlakeRez coatings contain inert flake reinforcement for dependability in maintaining their overlapping structure. The flakes within the chemical resistant resin matrix provide an extremely low permeation rate, which greatly reduces passage of ions through the coating.

TYPICAL APPLICATION

• Primer	PolySpec 310 (steel) / 320 (concrete) @ 2–3 mils DFT
• Detail Preparation	PolySpec 731
• Basecoat	FlakeRez 304 @ 15–20 mils DFT
• Topcoat	FlakeRez 304 @ 15–20 mils DFT

PERFORMANCE DATA

Tensile Strength (ASTM C-307)	3,500 psi
Flexural Strength (ASTM C-580)	8,500 psi
Hardness, Barcol (ASTM D-2583)	35–40
Abrasion Resistance (ASTM D-4060)	25 mg
Moisture Permeability, perm. in. (ASTM E-96)	0.002
Operating Temperature, maximum . Dry:	300–350°F
Wet:	Dependant on chemical exposure
VOC	1.23 lb/gal; 148 gm/L

STORAGE & INSTALLATION

Storage Environment	Dry enclosed area, 65–80°F
Application Temperature, ambient	50–95°F
Application Temperature, substrate	Minimum 5°F above dew point
Shelf Life, PROVIDED STORAGE ENVIRONMENT GUIDELINES ARE FOLLOWED	60 days
Pot Life, @ 77°F	30 minutes
Full Service, @ 77°F	3–5 days

Material cures more slowly at cooler temperatures, and working time will be substantially reduced at higher temperatures. In hot weather, material should be cooled to 65°F to 80°F prior to mixing and application to improve workability and avoid shortened pot life. The data shown above reflects typical results based on laboratory testing under controlled conditions. Reasonable variations from the data shown above may result.

CONSIDERATIONS & LIMITATIONS

1. For best results, work area should be humidity and temperature controlled.
2. Work area must be well ventilated. Fresh air fed respirators are recommended when working with this product.
3. Do not thin with solvents unless advised to do so by PolySpec.
4. Confirm product performance in specific chemical environment prior to use.
5. Prepare substrate according to "Surface Preparation" portion of this document.
6. Do not apply to slabs on grade unless a heavy unruptured vapor barrier has been installed under the slab.
7. Always use protective clothing, gloves and goggles consistent with OSHA regulations during use. Avoid eye and skin contact. Do not ingest or inhale. Refer to Material Safety Data Sheet for detailed safety precautions.
8. For industrial/commercial use. Installation by trained personnel only.

BENEFITS

- *Excellent resistance to fluorides such as hydrofluoric and hydrofluosilicic acids*
- *Seamless, jointless barrier coating*
- *Long-term reliability due to extremely low permeation rate of overlapping flake technology*
- *Easy application in two 20-mil coats*
- *No baking required*
- *Withstands high operating temperatures*

RECOMMENDED USES

- *Tank interior lining*
- *Process vessels*
- *Process floors*
- *Tank and effluent sump dikes*

GENERIC DESCRIPTION

Graphite Flake-Filled Vinyl Ester Novolac

STANDARD COLORS

Charcoal Gray

PACKAGING

4.5-Gallon Unit

COVERAGE

25–30 ft² / gallon @ 35–40 mils DFT

(INCLUDES 2 COATS @ 15–20 MILS DFT EACH)

6614 GANT ROAD • HOUSTON, TEXAS 77066 • TEL: 281-397-0033 • FAX: 281-397-6512
www.polyspec.com

PolySpec®

PolySpec® 731

TECHNICAL DATA SHEET

Non-Sag Gel, for use with Vinyl Esters & Polyesters

DESCRIPTION

PolySpec 731 is a polyester putty material used with polyester and vinyl ester lining systems. It is used primarily to round the corner radius at vertical to horizontal transitions in steel and concrete prior to lining applications.

PERFORMANCE DATA

Tensile Strength (ASTM D-412)	1,800 psi
Bond Strength (ASTM D-4541)	300 psi
Viscosity	Heavy Paste
VOC	0.405 lb/gal; 296 gm/L

STORAGE & INSTALLATION

Storage Environment	Dry area, 65–80°F
Application Temperature, ambient	50–95°F
Application Temperature, substrate	Minimum 5°F above dew point
Shelf Life, PROVIDED STORAGE ENVIRONMENT GUIDELINES ARE FOLLOWED	60 days
Pot Life, @ 77°F	20–25 minutes
Set Time, @ 77°F	2–4 hours

Material cures more slowly at cooler temperatures, and working time will be substantially reduced at higher temperatures. In hot weather, material should be cooled to 65°F to 80°F prior to mixing and application to improve workability and avoid shortened pot life. The data shown above reflects typical results based on laboratory testing under controlled conditions. Reasonable variations from the data shown above may result.

CONSIDERATIONS & LIMITATIONS

1. Do not install in thicknesses greater than 1/2" in one application.
2. Unlike epoxies, PolySpec 731 does not build up heat until after the initial set has occurred, making his product well suited for use on horizontal and vertical surfaces.
3. Do not thin with solvents unless advised to do so by PolySpec.
4. Confirm product performance in specific chemical environment prior to use.
5. Prepare substrate according to "Surface Preparation" portion of this document.
6. Always use protective clothing, gloves and goggles consistent with OSHA regulations during use. Avoid eye and skin contact. Do not ingest or inhale. Refer to Material Safety Data Sheet for detailed safety precautions.
7. For industrial/commercial use. Installation by trained personnel only.

BENEFITS

- *Anti-sag formula*
- *Long recoat times*
- *Ease of application*
- *Suited for horizontal and vertical surfaces*

RECOMMENDED USES

- *Round the corner radius at vertical to horizontal transitions*
  - *concrete walls and pedestals*
  - *steel tank chimes*
- *Smooth welds*
- *Fill small pits and voids in concrete*
- *General purpose patching*

GENERIC DESCRIPTION

Polyester Putty

STANDARD COLORS

Amber

PACKAGING

5-Gallon Unit

COVERAGE

231 in^3 / gallon

6 ft^2 / gallon @ 1/4" thickness

6614 GANT ROAD • HOUSTON, TEXAS 77066 • TEL: 281.397.6033 • FAX: 281.397.6512
www.polyspec.com

PolySpec® 310

TECHNICAL DATA SHEET

Primer for Vinyl Esters & Polyesters on Steel

DESCRIPTION

PolySpec 310 primer is used on blasted steel surfaces prior to application of FlakeRez and PermaRez coatings and lining systems.

TYPICAL APPLICATION

• Primer	PolySpec 310 @ 250–350 ft²/gallon
• Overcoat	Flooring or Lining System from PolySpec

PERFORMANCE DATA

Tensile Strength (ASTM D-412) ..... 10,000 psi
Elongation (ASTM D-638) 10–12%
Hardness, Barcol 30

STORAGE & INSTALLATION

Storage Environment ..... Dry area, 65–80°F
Application Temperature, ambient ..... 50–95°F
Application Temperature, substrate ..... Minimum 5°F above dew point
Shelf Life, PROVIDED STORAGE ENVIRONMENT GUIDELINES ARE FOLLOWED ..... 60 days
Pot Life, @ 77°F ..... 25 minutes
Minimum Recoat, @77°F ..... 6–8 hours

Material cures more slowly at cooler temperatures, and working time will be substantially reduced at higher temperatures. In hot weather, material should be cooled to 65°F to 80°F prior to mixing and application to improve workability and avoid shortened pot life. The data shown above reflects typical results based on laboratory testing under controlled conditions. Reasonable variations from the data shown above may result.

CONSIDERATIONS & LIMITATIONS

1. Apply PolySpec 310 within eight (8) hours of the blasting operation to protect the blasted surface from rusting.
2. For best results, this product should be applied in a humidity and temperature-controlled environment.
3. Do not thin with solvents unless advised to do so by PolySpec.
4. Confirm product performance in specific chemical environment prior to use.
5. Prepare substrate according to "Surface Preparation" portion of this document.
6. Always use protective clothing, gloves and goggles consistent with OSHA regulations during use. Avoid eye and skin contact. Do not ingest or inhale. Refer to Material Safety Data Sheet for detailed safety precautions.
7. For industrial/commercial use. Installation by trained personnel only.

BENEFITS

- *Provides flexible transition between steel substrate and lining system*
  - *Excellent surface adhesion to steel substrate*
  - *Excellent bond to subsequent lining systems*
- *Protects blasted steel surface from rust*
- *Contains no lead pigment*

RECOMMENDED USES

- *Used in conjunction with FlakeRez® and PermaRez® polyester or vinyl ester coatings & lining systems for steel*

GENERIC DESCRIPTION

Primer

STANDARD COLORS

Amber

PACKAGING

1-Gallon Unit

5-Gallon Unit

COVERAGE

250–300 ft² / gallon @ 1–3 mils DFT

6614 GANT ROAD • HOUSTON, TEXAS 77066 • TEL: 281-397-0033 • FAX: 281-397-6512
www.polyspec.com

PolySpec®

LINING APPLICATION SPEC.
PLANNED TANKS T-1 THRU T-5
6 SHEETS

GENERAL SPECIFICATION FOR LINING STEEL TANKS WITH PERMAREZ[7] 333 CHEMICAL RESISTANT LINING

1.0 General

1.1 This specification covers the minimum requirements for installing PermaRez 333 Lining to the interior surfaces of steel tanks. Application should be done in accordance with this guideline by contractors qualified in installing this product.

1.2 A qualified contractor is defined as one with 1) a minimum of five years of experience in installing similar systems, 2) demonstrated financial stability in warranting work and 3) certification by PolySpec Corporation.

1.3 The work to be performed shall include furnishing of all labor, materials, tools and equipment required for lining all steel surfaces as outlined in this specification.

2.0 References

2.1 National Association of Corrosion Engineers (NACE):

NACE Standard RP0178-91 - Fabrication Details, Surface Finish Requirements, and Proper Design Considerations for Tanks and Vessels to be Lined for Immersion Service.

NACE Standard RP0188-90 - Discontinuity (Holiday) Testing of Protective Coatings.

NACE Standard RP0287-91 - Field Measurement of Surface Profile of Abrasive Blast Cleaned Steel Surfaces Using a Replica Tape.

NACE Standard RP0288-94 - Inspection of Linings on Steel and Concrete.

NACE Standard TM0170-70 - Visual Standards for Surfaces of New Steel Air Blast Cleaned with Sand Abrasive.

NACE No. 1 - White Metal Blast Cleaning.

2.2 Steel Structures Painting Council (SSPC):

SSPC-VIS-1-89 - Visual Standard for Abrasive Blast Cleaned Steel.

SSPC-SP 5 - White Metal Blast Cleaning.

3.0 Materials

Materials shall be manufactured by PolySpec Corporation (Phone 281-397-0033; Fax 281-397-6512) as indicated below:

3.1 PermaRez 333 Lining Resin

A pre-promoted vinyl ester novolac resin for saturating fiberglass and synthetic veils.

3.2 PermaRez 333 Topcoat Resin

A pre-promoted vinyl ester novolac resin containing a wax solution used for topcoating.

3.3 PolySpec[7] 300 Primer

A 10% high elongation vinyl ester primer with a minimum tensile bond to carbon steel of 1300 psi.

3.4 PolySpec[7] 730 Pre-Surfacer

A silica filled coating used for filling small holes and pits in steel surfaces prior to lining.

3.5 PolySpec[7] 731 Putty

A very high viscosity silica filled polyester putty for application to chime area and for smoothing welds prior to lining.

3.6 Fiberglass Chopped Strand Mat and Woven Roving

Reinforcement used with lining resin to provide high tensile strength.

3.7 Hardener #1

Methyl Ethyl Ketone Peroxide catalyst for the above resin systems. Hardener should be added at 1-1/2 to 2 oz. per gallon of resin product.

4.0 Delivery and Storage

4.1 All lining materials shall be delivered to the jobsite in their original, unopened containers with the proper, fully legible labels attached. Damaged containers shall be set apart and returned to the manufacturer for replacement.

4.2 Whenever possible, the work area and mixing area should be covered from exposure to direct sunlight. Due to limited shelf life, materials should be stored in their tightly sealed original containers in a dry place at temperatures between 65 and 80° F. Materials hall be used soon after containers have been opened. Shelf life for PermaRez 333 is 30 days from date of manufacture. Lining materials should only be applied at temperatures between 50 and 95° F.

5.0 Safety and Tank Preparation

5.1 All the preparation and application steps in this guideline specification shall be in accordance with manufacturer's MSDS instructions as well as Owner's site conditions and applicable Federal, state, and local rules and regulations.

5.2 Precautions should be taken when working with styrene based materials. Use materials only in adequately ventilated areas, keep away from open flames, and store in dry, covered areas. Organic peroxides are extremely volatile and shall be stored in a special location away from sources of heat.

5.3 Workers should always wear protective clothing, gloves and eyewear when working with these products. Respiratory protection is required.

5.4 Tanks shall be disconnected, commercially cleaned, and freed of gas below toxic and explosive limits by Owner.

5.5 The tank shall be well ventilated and equipped with sufficient explosion-proof equipment to remove dust and fumes from the tank interior.

5.6 All interior lighting shall be explosion-proof. All electrical equipment shall employ a ground fault interrupter.

5.7 Dehumidification equipment is required when working with vinyl ester resin based materials.

6.0 Tank Fabrication Requirements

6.1 Internal stiffeners and brackets shall be made of pipes and rods instead of angles and channels.

6.2 Internal welds shall be continuous but not necessarily smooth.

6.3 All sharp corners and edges of internal structural members shall be rounded

to a radius of 1/8" minimum.

6.4 Flanged connections should not be under 2" in diameter.

6.5 Small diameter nozzle inserts made of vinyl ester fiberglass reinforced material shall be provided and installed by the contractor.

7.0 Surface Preparation

7.1 All weld splatter shall be removed, and all burrs and sharp edges shall be ground down.

7.2 Surfaces to be lined shall be blasted to a SSPC-SP 5 or NACE No. 1 "White Metal" blast.

7.3 An anchor mil profile of 2-1/2-3 mils is required.

7.4 A non-silica grit, such as Black Beauty, is required (except boiler slag).

7.5 All traces of abrasive media and dust shall be removed after blasting.

8.0 Application

8.1 Priming. The blasted surface shall be primed before the surface begins to form rust. If rust begins to form, the surface shall be re-blasted. Apply one coat of PolySpec[7] 300 Primer by spray or roller. Primer resin is catalyzed by adding 1-1/2 to 2 oz. of Hardener #1 to a gallon of resin. Working time is limited, so the primer should be quickly applied. Recommended primer thickness is about 2-4 mils. Contractor shall take care to avoid excessive build-up of primer.

8.2 Putty. PolySpec[7] 731 Putty shall be catalyzed and applied by putty knife to the following areas:

a. Small pits, depressions and imperfections.

b. Welded plates, protrusions and lap joints (to smooth the surface transition).

c. The chime area to form a smooth radius.

d. Any riveted seams, where applicable.

8.3 Laminating Resin. Lining application may proceed once the primer is dry to the touch (usually after 6-8 hours at 70° F.) If the lining is delayed longer than three days, the surface may have to be re-primed.

The lay-up operation shall proceed as follows:

a. Cut two or three layers of chopped strand mat. Allowances shall be made for staggered joints with at least a 2" overlap.

b. Catalyze the resin with Hardener #1 at a rate of 1-1/2 to 2 oz./gallon of resin. Mix well.

c. Apply a heavy coat of catalyzed resin onto the surface by roller or spray.

d. Lay a fiberglass mat into the wet resin. Press the mat out using a serrated roller. All mat fibers shall be wetted out so that the whiteness of the mat disappears. Repeat until three bubble-free layers of chopped strand mat have been installed in one application.

e. Care should be taken that the mat is neither too dry nor too resin rich.

Each section of fiberglass shall overlap the next section by at least 3".

The bottom lay-up operation shall proceed with successive parallel courses with a 3" overlap.

8.4 Topcoat. A final topcoat shall be applied by roller or spray to all lined surfaces. This acts as a sealer to prevent air from inhibiting the ultimate cure. The entire lined area should be reinspected as outlined below. Patches can be made to the topcoat without grinding down the resin topcoat.

9.0 Inspection/Quality Assurance

9.1 There will be a pre-job meeting attended by all personnel including Owner, Contractor/Subcontractor, Safety Engineer, Inspector and Lining Manufacturer Representative.

9.2 All inspections shall be recorded and shall include the following information:

Date and time of day
Weather conditions (air and surface, humidity)
Description of surface preparation
Thicknesses per coat
Visual inspection of workmanship

9.3 Application temperature shall be at least 5 degrees above the dew point.

9.4 The Contractor shall take mil profile readings at periodic intervals during the blasting process.

9.5 After lamination, the entire lined surface should be inspected for defects such as resin puddling, wrinkles, burrs, bubbles and uncured resin.

9.6 The Contractor shall randomly test the lining thickness with a dry film mil gauge. Total dry film thickness is a minimum of 100 mils.

9.7 To test curability of the lining, the Contractor shall randomly test the surface hardness with a Barcol Hardness Tester. The lining should show a minimum reading of 30 after 24 hours of curing and 40 after five to seven days of curing.

9.8 Pinholes in the lining should be detected using a Holiday Detector set at a minimum of 10,000 volts or 100 volts/mil.

9.9 Defects in the lining shall be repaired with a patch of the resin/fiberglass lining that extends at least 3" over the patched area. The patch should be applied using the same techniques as outlined above. Where it is necessary to cut into the lining to remove an inferior section, the depression should be filled with putty prior to the application of the patch.

9.10 Retest all patched areas following the above steps.

10.0 Warranty

10.1 Manufacturer shall warrant that its products are free from defects. Manufacturer shall provide a materials warranty to the Owner for a period of one year from date of manufacture. Liability, if any, is limited to product replacement.

10.2 Manufacturer and contractor may also provide a joint warranty for product installation for a period of one year from date of installation. The contract shall specifically stipulate what constitutes a failure of the coating system and the operating conditions for the coating system. Liability, if any, for the manufacturer is limited to product replacement and, for the contractor, re-installation costs. This warranty specifically excludes liabilities for consequential or incidental damages.

EXTERIOR COATING INFO.
PLANNED TANKS T-1 THRU T-5
8 SHEETS

SHERWIN WILLIAMS.

Industrial & Marine Coatings

4.53 MACROPOXY® 646 FAST CURE EPOXY

PART A B58-600 SERIES
PART B B58V600 HARDENER

PRODUCT INFORMATION

Revised 9/07

PRODUCT DESCRIPTION

MACROPOXY 646 FAST CURE EPOXY is a high solids, high build, fast drying, polyamide epoxy designed to protect steel and concrete in industrial exposures. Ideal for maintenance painting and fabrication shop applications. The high solids content ensures adequate protection of sharp edges, corners, and welds. This product can be applied directly to marginally prepared steel surfaces.

- Low VOC
- Low odor
- Chemical resistant
- Abrasion resistant

RECOMMENDED USES

- Marine applications
- Fabrication shops
- Pulp and paper mills
- Power plants
- Offshore platforms
- Refineries
- Chemical plants
- Tank exteriors
- Water treatment plants
- Mill White and Black are acceptable for immersion use for salt water and fresh water, not acceptable for potable water
- Suitable for use in USDA inspected facilities

Conforms to AWWA D102-03 OCS #5

PRODUCT CHARACTERISTICS

Finish: Semi-Gloss

Color: Mill White, Black and a wide range of colors available through tinting

Volume Solids: 72% ± 2%, mixed
Mill White

Weight Solids: 85% ± 2%, mixed
Mill White

VOC (EPA Method 24): Unreduced: <250 g/L; 2.08 lb/gal
mixed Reduced 10%: <300 g/L; 2.50 lb/gal

Mix Ratio: 1:1 by volume

Recommended Spreading Rate per coat:

Wet mils:	7.0 - 13.5
Dry mils:	5.0 - 10.0*
Coverage:	116 - 232 sq ft/gal approximate

NOTE: Brush or roll application may require multiple coats to achieve maximum film thickness and uniformity of appearance.
* See Recommended Systems

Drying Schedule @ 7.0 mils wet and 50% RH:

	@ 40°F	@ 77°F	@ 100°F
To touch:	4-5 hours	2 hours	1½ hours
To handle:	48 hours	8 hours	4½ hours
To recoat:			
minimum:	48 hours	8 hours	4½ hours
maximum:	1 year	1 year	1 year
Cure for			
service:	10 days	7 days	4 days
immersion:	14 days	7 days	4 days

If maximum recoat time is exceeded, abrade surface before recoating.
Drying time is temperature, humidity and film thickness dependent.

Pot Life:	10 hours	4 hours	2 hours
Sweat-in-time:	30 minutes	30 minutes	15 minutes

Shelf Life: 36 months, unopened
Store indoors at 40°F to 100°F.

Flash Point: 91°F, TCC, mixed

Reducer/Clean Up: Reducer, R7K15
In California: Reducer R7K111 or Oxsol 100

PERFORMANCE CHARACTERISTICS

System Tested: (unless otherwise indicated)
Substrate: Steel
Surface Preparation: SSPC-SP10
1 ct. Macropoxy 646 Fast Cure @ 6.0 mils dft

Abrasion Resistance:
Method: ASTM D4060, CS17 wheel, 1000 cycles, 1 kg load
Result: 84 mg loss

Accelerated Weathering - QUV, Zinc Clad II Plus Primer:
Method: ASTM D4587, QUV-A, 12,000 hours
Results: passes

Adhesion:
Method: ASTM D4541
Result: 1,037 psi

Corrosion Weathering, Zinc Clad II Plus Primer:
Method: ASTM D5894, 36 cycles, 12,000 hours
Result: Rating 10 per ASTM D714 for blistering
Rating 9 per ASTM D610 for rusting

Direct Impact Resistance:
Method: ASTM D2794
Result: 30 in. lb.

Dry Heat Resistance:
Method: ASTM D2485
Result: 250°F

Exterior Durability:
Method: 1 year at 45° South
Result: Excellent, chalks

Flexibility:
Method: ASTM D522, 180° bend, 3/4" mandrel
Result: Passes

Humidity Resistance
Method: ASTM D4585, 6000 hrs
Result: No blistering, cracking, or rusting

Immersion:
Method: 1 year fresh and salt water
Result: Passes, no rusting, blistering, or loss of adhesion

Irradiation-Effects on Coatings used in Nuclear Power Plants
Method: ANSI 5.12 / ASTM D4082-89
Result: Passes

Pencil Hardness:
Method: ASTM D3363
Result: 3H

Water Vapor Permeance:
Method: ASTM D1653, Method B
Result: 1.16 US perms

Salt Fog Resistance, Zinc Clad II Plus Primer::
Method: ASTM B117, 6,500 hours
Result: Rating 10 per ASTM D610 for rusting
Rating 9 per ASTM D1654 for corrosion

Slip Coefficient, Mill White:
Method: AISC Specification for Structural Joints Using ASTM A325 or ASTM A490 Bolts
Result: Class A, 0.36

Epoxy coatings may darken or discolor following application and curing.

continued on back

Industrial & Marine Coatings

4.53

MACROPOXY® 646 FAST CURE EPOXY

PART A B58-600 SERIES
PART B B58V600 HARDENER

PRODUCT INFORMATION

RECOMMENDED SYSTEMS

Immersion and atmospheric:

Steel:
2 cts. Macropoxy 646 @ 5.0 - 10.0 mils dft/ct

Concrete/Masonry, smooth:
2 cts. Macropoxy 646 @ 5.0 - 10.0 mils dft/ct

Concrete Block:
1 ct. Kem Cati-Coat HS Epoxy Filler/Sealer @ 10.0 - 20.0 mils dft, as needed to fill voids and provide a continuous substrate.
2 cts. Macropoxy 646 @ 5.0 - 10.0 mils dft/ct

Atmospheric:
***Steel:**
(Shop applied system, new construction, AWWA D102-03, can also be used at 3 mils minimum dft when used as an intermediate coat as part of a multi-coat system)
1 ct. Macropoxy 646 Fast Cure Epoxy @ 3.0 - 6.0 mils dft
1-2 cts. of recommended topcoat

Steel:
1 ct. Recoatable Epoxy Primer @ 4.0 - 6.0 mils dft
2 cts. Macropoxy 646 @ 5.0 - 10.0 mils dft/ct

***Steel:**
1 ct. Macropoxy 646 @ 4.0 - 6.0 mils dft
1-2 cts. Acrolon 218 Polyurethane @ 3.0 - 6.0 mils dft/ct
or Hi-Solids Polyurethane @ 3.0 - 5.0 mils dft/ct
or SherThane 2K Urethane @ 2.0 - 4.0 mils dft/ct

Steel:
2 cts. Macropoxy 646 @ 5.0 - 10.0 mils dft/ct
1-2 cts. Tile-Clad HS Epoxy @ 2.5 - 4.0 mils dft/ct

Steel:
1 ct. Zinc Clad II Plus @ 3.0 - 6.0 mils dft
1 ct. Macropoxy 646 @ 5.0 - 10.0 mils dft
1-2 cts. Acrolon 218 Polyurethane @ 3.0 - 6.0 mils dft/ct

Steel:
1 ct. Zinc Clad III HS @ 3.0 - 5.0 mils dft
or Zinc Clad IV @ 3.0 - 5.0 mils dft
1 ct. Macropoxy 646 @ 5.0 - 10.0 mils dft
1-2 cts. Acrolon 218 Polyurethane @ 3.0 - 6.0 mils dft/ct

Aluminum:
2 cts. Macropoxy 646 @ 5.0 - 10.0 mils dft/ct

Galvanizing:
2 cts. Macropoxy 646 @ 5.0 - 10.0 mils dft/ct

The systems listed above are representative of the product's use. Other systems may be appropriate.

SURFACE PREPARATION

Surface must be clean, dry, and in sound condition. Remove all oil, dust, grease, dirt, loose rust, and other foreign material to ensure good adhesion.
Refer to product Application Bulletin for detailed surface preparation information.
Minimum recommended surface preparation:

Iron & Steel	
Atmospheric:	SSPC-SP2/3
Immersion:	SSPC-SP10/NACE 2, 2-3 mil profile
Aluminum:	SSPC-SP1
Galvanizing:	SSPC-SP1
Concrete & Masonry	
Atmospheric:	SSPC-SP13/NACE 6, or ICRI 03732, CSP 1-3
Immersion:	SSPC-SP13/NACE 6-4.3.1 or 4.3.2, or ICRI 03732, CSP 1-3

TINTING

Tint Part A with 844 Colorants at 150% strength. Five minutes minimum mixing on a mechanical shaker is required for complete mixing of color.

Tinting is not recommended for immersion service.

APPLICATION CONDITIONS

Temperature:	40°F minimum, 140°F maximum (air, surface, and material)
	At least 5°F above dew point
Relative humidity:	85% maximum

Refer to product Application Bulletin for detailed application information.

ORDERING INFORMATION

Packaging:	
Part A:	1 and 5 gallon containers
Part B:	1 and 5 gallon containers
Weight per gallon:	12.9 ± 0.2 lb mixed, may vary by color

SAFETY PRECAUTIONS

Refer to the MSDS sheet before use.

Published technical data and instructions are subject to change without notice. Contact your Sherwin-Williams representative for additional technical data and instructions.

DISCLAIMER

The information and recommendations set forth in this Product Data Sheet are based upon tests conducted by or on behalf of The Sherwin-Williams Company. Such information and recommendations set forth herein are subject to change and pertain to the product offered at the time of publication. Consult your Sherwin-Williams representative to obtain the most recent Product Data Information and Application Bulletin.

WARRANTY

The Sherwin-Williams Company warrants our products to be free of manufacturing defects in accord with applicable Sherwin-Williams quality control procedures. Liability for products proven delective, if any, is limited to replacement of the defective product or the relund of the purchase price paid for the defective product as determined by Sherwin-Williams. NO OTHER WARRANTY OR GUARANTEE OF ANY KIND IS MADE BY SHERWIN-WILLIAMS, EXPRESSED OR IMPLIED, STATUTORY, BY OPERATION OF LAW OR OTHERWISE, INCLUDING MERCHANTABILITY AND FITNESS FOR A PARTICULAR PURPOSE.

Industrial & Marine Coatings

4.53A MACROPOXY® 646 FAST CURE EPOXY

PART A B58-600 SERIES
PART B B58V600 HARDENER

APPLICATION BULLETIN

Revised 9/07

SURFACE PREPARATION

Surface must be clean, dry, and in sound condition. Remove all oil, dust, grease, dirt, loose rust, and other foreign material to ensure adequate adhesion.

Iron & Steel, Atmospheric Service:
Minimum surface preparation is Hand Tool Clean per SSPC-SP2. Remove all oil and grease from surface by Solvent Cleaning per SSPC-SP1. For better performance, use Commercial Blast Cleaning per SSPC-SP6/NACE 3, blast clean all surfaces using a sharp, angular abrasive for optimum surface profile (2 mils). Prime any bare steel within 8 hours or before flash rusting occurs.

Iron & Steel, Immersion Service:
Remove all oil and grease from surface by Solvent Cleaning per SSPC-SP1. Minimum surface preparation is Near White Metal Blast Cleaning per SSPC-SP10/NACE 2. Blast clean all surfaces using a sharp, angular abrasive for optimum surface profile (2-3 mils). Remove all weld spatter and round all sharp edges by grinding. Prime any bare steel the same day as it is cleaned.

Aluminum
Remove all oil, grease, dirt, oxide and other foreign material by Solvent Cleaning per SSPC-SP1.

Galvanized Steel
Allow to weather a minimum of six months prior to coating. Solvent Clean per SSPC-SP1 (recommended solvent is VM&P Naphtha). When weathering is not possible, or the surface has been treated with chromates or silicates, first Solvent Clean per SSPC-SP1 and apply a test patch. Allow paint to dry at least one week before testing adhesion. If adhesion is poor, brush blasting per SSPC-SP7 is necessary to remove these treatments. Rusty galvanizing requires a minimum of Hand Tool Cleaning per SSPC-SP2, prime the area the same day as cleaned.

Concrete and Masonry, Atmospheric Service:
For surface preparation, refer to NACE 6/SSPC-SP13, or ICRI 03732, CSP 1-3. Surfaces should be thoroughly clean and dry. Concrete and mortar must be cured at least 28 days @ 75°F. Remove all loose mortar and foreign material. Surface must be free of laitance, concrete dust, dirt, form release agents, moisture curing membranes, loose cement and hardeners. Fill bug holes, air pockets and other voids with a cement patching compound. Weathered masonry and soft or porous cement board must be brush blasted or power tool cleaned to remove loosely adhering contamination and to get to a hard, firm surface. Laitance must be removed by etching with a 10% muriatic acid solution and thoroughly neutralized with water.

Concrete and Masonry, Immersion Service:
For surface preparation, refer to SSPC-SP13/NACE 6, Section 4.3.1 or 4.3.2, or ICRI 03732, CSP 1-3.

Previously Painted Surfaces
If in sound condition, clean the surface of all foreign material. Smooth, hard or glossy coatings and surfaces should be dulled by abrading the surface. Apply a test area, allowing paint to dry one week before testing adhesion. If adhesion is poor, or if this product attacks the previous finish, removal of the previous coating may be necessary. If paint is peeling or badly weathered, clean surface to sound substrate and treat as a new surface as above.

APPLICATION CONDITIONS

Temperature:	40°F minimum, 140°F maximum (air, surface, and material) At least 5°F above dew point
Relative humidity:	85% maximum

APPLICATION EQUIPMENT

The following is a guide. Changes in pressures and tip sizes may be needed for proper spray characteristics. Always purge spray equipment before use with listed reducer. Any reduction must be compliant with existing VOC regulations and compatible with the existing environmental and application conditions.

Reducer/Clean Up ..... Reducer R7K15
In California ..... Reducer R7K111

Airless Spray
Pump 30:1
Pressure ..... 2800 - 3000 psi
Hose ..... 1/4" ID
Tip ..... .017" - .023"
Filter ..... 60 mesh
Reduction ..... As needed up to 10% by volume

Conventional Spray
Gun ..... DeVilbiss MBC-510
Fluid Tip ..... E
Air Nozzle 704
Atomization Pressure .. 60-65 psi
Fluid Pressure ..... 10-20 psi
Reduction ..... As needed up to 10% by volume
Requires oil and moisture separators

Brush
Brush ..... Nylon/Polyester or Natural Bristle
Reduction ..... Not recommended

Roller
Cover ..... 3/8" woven with phenolic core
Reduction ..... Not recommended

If specific application equipment is listed above, equivalent equipment may be substituted.

continued on back

Industrial & Marine Coatings

4.53A MACROPOXY® 646 FAST CURE EPOXY

PART A B58-600 SERIES
PART B B58V600 HARDENER

APPLICATION BULLETIN

APPLICATION PROCEDURES

Surface preparation must be completed as indicated.

Mix contents of each component thoroughly with power agitation. Make certain no pigment remains on the bottom of the can. Then combine one part by volume of Part A with one part by volume of Part B. Thoroughly agitate the mixture with power agitation. Allow the material to sweat-in as indicated prior to application. Re-stir before using.

If reducer solvent is used, add only after both components have been thoroughly mixed, after sweat-in.

Apply paint to the recommended film thickness and spreading rate as indicated below:

Recommended Spreading Rate per coat:

Wet mils:	7.0 - 13.5
Dry mils:	5.0 - 10.0*
Coverage:	116 - 232 sq ft/gal approximate

NOTE: Brush or roll application may require multiple coats to achieve maximum film thickness and uniformity of appearance.
*See Recommended Systems

Drying Schedule @ 7.0 mils wet and 50% RH:

	@ 40°F	@ 77°F	@ 100°F
To touch:	4-5 hours	2 hours	1½ hours
To handle:	48 hours	8 hours	4½ hours
To recoat:			
minimum:	48 hours	8 hours	4½ hours
maximum:	1 year	1 year	1 year
Cure for			
service:	10 days	7 days	4 days
immersion:	14 days	7 days	4 days

If maximum recoat time is exceeded, abrade surface before recoating.
Drying time is temperature, humidity and film thickness dependent.

Pot Life:	10 hours	4 hours	2 hours
Sweat-in-time:	30 minutes	30 minutes	15 minutes

Application of coating above maximum or below minimum recommended spreading rate may adversely affect coating performance.

PERFORMANCE TIPS

Stripe coat all crevices, welds, and sharp angles to prevent early failure in these areas.

When using spray application, use a 50% overlap with each pass of the gun to avoid holidays, bare areas, and pinholes. If necessary, cross spray at a right angle

Spreading rates are calculated on volume solids and do not include an application loss factor due to surface profile, roughness or porosity of the surface, skill and technique of the applicator, method of application, various surface irregularities, material lost during mixing, spillage, overthinning, climatic conditions, and excessive film build.

Excessive reduction of material can affect film build, appearance, and adhesion.

Do not mix previously catalyzed material with new.

Do not apply the material beyond recommended pot life.

In order to avoid blockage of spray equipment, clean equipment before use or before periods of extended downtime with Reducer R7K15. In California use Reducer R7K111.

Tinting is not recommended for immersion service.

Use only Mil White and Black for immersion service.

Quik-Kick Epoxy Accelerator is acceptable for use. See data page 4.99 for details.

Refer to Product Information sheet for additional performance characteristics and properties.

CLEAN UP INSTRUCTIONS

Clean spills and spatters immediately with Reducer R7K15. Clean tools immediately after use with Reducer R7K15. In California use Reducer R7K111. Follow manufacturer's safety recommendations when using any solvent.

SAFETY PRECAUTIONS

Refer to the MSDS sheet before use.

Published technical data and instructions are subject to change without notice. Contact your Sherwin-Williams representative for additional technical data and instructions.

MATERIAL SAFETY DATA SHEET

B58W610
12 00

DATE OF PREPARATION
Mar 26, 2009

SECTION 1 — PRODUCT AND COMPANY IDENTIFICATION

PRODUCT NUMBER
B58W610
PRODUCT NAME
MACROPOXY® 646 Fast Cure Epoxy Coating (Part A), Mill White
MANUFACTURER'S NAME
THE SHERWIN-WILLIAMS COMPANY
101 Prospect Avenue N.W.
Cleveland, OH 44115

Telephone Numbers and Websites

Product Information	www.sherwin-williams.com
Regulatory Information	(216) 566-2902 www.paintdocs.com
Medical Emergency	(216) 566-2917
Transportation Emergency*	(800) 424-9300
**for Chemical Emergency ONLY (spill, leak, fire, exposure, or accident)*	

SECTION 2 — COMPOSITION/INFORMATION ON INGREDIENTS

% by Weight	CAS Number	Ingredient	Units	Vapor Pressure
3	100-41-4	**Ethylbenzene**		
		ACGIH TLV	100 PPM	7.1 mm
		ACGIH TLV	125 PPM STEL	
		OSHA PEL	100 PPM	
		OSHA PEL	125 PPM STEL	
15	1330-20-7	**Xylene**		
		ACGIH TLV	100 PPM	5.9 mm
		ACGIH TLV	150 PPM STEL	
		OSHA PEL	100 PPM	
		OSHA PEL	150 PPM STEL	
11	68410-23-1	**Polyamide**		
		ACGIH TLV	Not Available	
		OSHA PEL	Not Available	
9	14807-96-6	**Talc**		
		ACGIH TLV	2 mg/m3 as Resp. Dust	
		OSHA PEL	2 mg/m3 as Resp. Dust	
31	13463-67-7	**Titanium Dioxide**		
		ACGIH TLV	10 mg/m3 as Dust	
		OSHA PEL	10 mg/m3 Total Dust	
		OSHA PEL	5 mg/m3 Respirable Fraction	

SECTION 3 — HAZARDS IDENTIFICATION

ROUTES OF EXPOSURE
INHALATION of vapor or spray mist.
EYE or SKIN contact with the product, vapor or spray mist.

HMIS Codes

Health	3*
Flammability	3
Reactivity	0

EFFECTS OF OVEREXPOSURE
EYES: Irritation.
SKIN: Prolonged or repeated exposure may cause irritation.
INHALATION: Irritation of the upper respiratory system.

May cause nervous system depression. Extreme overexposure may result in unconsciousness and possibly death.
Prolonged overexposure to solvent ingredients In Section 2 may cause adverse effects to the liver, urinary and reproductive systems.

SIGNS AND SYMPTOMS OF OVEREXPOSURE
Headache, dizziness, nausea, and loss of coordination are indications of excessive exposure to vapors or spray mists.
Redness and itching or burning sensation may indicate eye or excessive skin exposure.

OTHER PRECAUTIONS

This product must be mixed with other components before use. Before opening the packages, READ AND FOLLOW WARNING LABELS ON ALL COMPONENTS.

Intentional misuse by deliberately concentrating and inhaling the contents can be harmful or fatal.

SECTION 9 — PHYSICAL AND CHEMICAL PROPERTIES

PRODUCT WEIGHT	12.19 lb/gal	1460 g/l
SPECIFIC GRAVITY	1.47	
BOILING POINT	277 - 292 °F	136 - 144 °C
MELTING POINT	Not Available	
VOLATILE VOLUME	29%	
EVAPORATION RATE	Slower than ether	
VAPOR DENSITY	Heavier than air	
SOLUBILITY IN WATER	N.A.	

VOLATILE ORGANIC COMPOUNDS (VOC Theoretical - As Packaged)

2.11lb/gal	253g/l	Less Water and Federally Exempt Solvents
2.11lb/gal	253g/l	Emitted VOC

SECTION 10 — STABILITY AND REACTIVITY

STABILITY — Stable

CONDITIONS TO AVOID

None known.

INCOMPATIBILITY

None known.

HAZARDOUS DECOMPOSITION PRODUCTS

By fire: Carbon Dioxide, Carbon Monoxide

HAZARDOUS POLYMERIZATION

Will not occur

SECTION 11 — TOXICOLOGICAL INFORMATION

CHRONIC HEALTH HAZARDS

Reports have associated repeated and prolonged overexposure to solvents with permanent brain and nervous system damage.

Ethylbenzene is classified by IARC as possibly carcinogenic to humans (2B) based on inadequate evidence in humans and sufficient evidence in laboratory animals. Lifetime inhalation exposure of rats and mice to high ethylbenzene concentrations resulted in increases in certain types of cancer, including kidney tumors in rats and lung and liver tumors in mice. These effects were not observed in animals exposed to lower concentrations. There is no evidence that ethylbenzene causes cancer in humans.

IARC's Monograph No. 93 reports there is sufficient evidence of carcinogenicity in experimental rats exposed to titanium dioxide but inadequate evidence for carcinogenicity in humans and has assigned a Group 2B rating. In addition, the IARC summary concludes, "No significant exposure to titanium dioxide is thought to occur during the use of products in which titanium is bound to other materials, such as paint."

TOXICOLOGY DATA

CAS No.	Ingredient Name			
100-41-4	Ethylbenzene			
		LC50 RAT	4HR	Not Available
		LD50 RAT		3500 mg/kg
1330-20-7	Xylene			
		LC50 RAT	4HR	5000 ppm
		LD50 RAT		4300 mg/kg
68410-23-1	Polyamide			
		LC50 RAT	4HR	Not Available
		LD50 RAT		8000. mg/kg
14807-96-6	Talc			
		LC50 RAT	4HR	Not Available
		LD50 RAT		Not Available
13463-67-7	Titanium Dioxide			
		LC50 RAT	4HR	Not Available
		LD50 RAT		Not Available

SECTION 12 — ECOLOGICAL INFORMATION

ECOTOXICOLOGICAL INFORMATION

No data available.

Industrial & Marine Coatings

5.35

POLYLON HP POLYURETHANE

PART A	B65-525	SERIES
PART B	B65V525	HARDENER

PRODUCT INFORMATION

Revised 11/08

PRODUCT DESCRIPTION

POLYLON HP POLYURETHANE is a high performance, high solids two component, exterior/interior, low VOC, polyester-aliphatic urethane coating. Provides a high gloss, excellent chemical resistance, color retention, and chalk resistance.

- Outstanding resistance to a wide range of chemical, weather, and mechanical conditions
- Abrasion and impact resistant
- Superior exterior color and gloss retention.

RECOMMENDED USES

- For industrial, commercial, or marine applications where a heavy duty polyurethane coating is required
- Resists splash, spillage, and fumes of dilute acids, alkalies, solvents, and fuels
- Tank Exteriors
- Pipelines
- Bridges
- Machinery and Equipment
- Marine Vessels
- Product finish type application
- Suitable for use in USDA inspected facilities

PRODUCT CHARACTERISTICS

Finish: Gloss

Color: Wide range of colors available

Volume Solids: 70% ± 2%, mixed, may vary by color

Weight Solids: 80% ± 2%, mixed, may vary by color

VOC (EPA Method 24): Unreduced: <250 g/L; 2.1 lb/gal
mixed Reduced 10%: <340 g/L; 2.8 lb/gal

Mix Ratio: 2:1 by volume

Recommended Spreading Rate per coat:

Wet mils:	3.0 - 4.5
Dry mils:	2.0 - 3.0
Coverage:	380 - 570 sq ft/gal approximate

Drying Schedule @ 4.0 mils wet @ 50% RH:

	@50°F	@ 77°F	@100°F
To touch:	16 hours	2 hours	30 minutes
To handle:	24 hours	5 hours	2 hours
To recoat:			
minimum:	24 hours	12 hours	2 hours
maximum:	3 days48 hours		24 hours
To cure:	7 days7 days	5 days	

If maximum recoat time is exceeded, abrade surface before recoating. Drying time is temperature, humidity, and film thickness dependent.

Pot Life:	5 hours	4 hours	45 minutes

Sweat-in-Time: None required

Shelf Life:
Part A: 36 months, unopened
Part B: 24 months, unopened
Store indoors at 40°F to 100°F

Flash Point: 102°F TCC, mixed

Reducer: Reducer #225, R7K225

PERFORMANCE CHARACTERISTICS

System Tested: (Unless otherwise indicated)
Substrate: Steel
Surface Preparation: SSPC-SP10
1 ct. Macropoxy 646 @6.0 mils dft
1 ct. Polylon HP @ 3.0 mils dft

Abrasion Resistance:
Method: ASTM D4060, CS17 wheel, 1000 cycles, 1 kg load
Result: 63 mg loss (average of 5 trials)

Accelerated Weathering -QUV:
Method: ASTM D4587, QUV-A 3000 hours
Results: Passes, >70% Gloss retention
Meets the requirements of SSPC Paint No.36, Level3.

Adhesion, steel:
Method: ASTM D3359 Method B Method: ASTM D4541
Result: 5B Result: 1200 psi

Direct Impact Resistance:
Method: ASTM D2794
Result: 100 in. lb.

Dry Heat Resistance:
Method: ASTM D2485
Result: 200°F, 250°F intermittent

Exterior Durability:
Method: 2 years at 45° South
Result: Excellent, 87% gloss retention

Flexibility:
Method: ASTM D522, 180° bend, 1/4" mandrel
Result: Passes

Humidity Resistance:
Method: ASTM D4585, 100°F, 2000 hours
Result: No blistering, cracking, softening or delamination

Pencil Hardness:
Method: ASTM D3363
Result: H

Salt Fog Resistance, with primer:
Method: ASTM B117, 1000 hours
Result: Rating 10 per ASTM D610 for rusting, less than 1/16" creepage at scribe. No blistering, cracking, softening, or delamination of the film.

continued on back

Industrial & Marine Coatings

5.35A

POLYLON HP POLYURETHANE

PART A B65-525 SERIES
PART B B65V525 HARDENER

APPLICATION BULLETIN

Revised 11/08

SURFACE PREPARATION

Surface must be clean, dry, and in sound condition. Remove all oil, dust, grease, dirt, loose rust, and other foreign material to ensure adequate adhesion.

Iron & Steel
Remove all oil and grease from surface by Solvent Cleaning per SSPC-SP1. Minimum surface preparation is Commercial Blast Cleaning per SSPC-SP6/NACE 3. For better performance, use Near White Metal Blast Cleaning per SSPC-SP10/NACE 2. Blast clean all surfaces using a sharp, angular abrasive for optimum surface profile (1-2 mils). Prime any bare steel the same day as it is cleaned or before flash rusting occurs. Primer Required.

Previously Painted Surfaces:
If in sound condition, clean the surface of all foreign material. Smooth, hard or glossy coatings and surfaces should be dulled by abrading the surface. Apply a test area, allowing paint to dry one week before testing adhesion. If adhesion Is poor, or if this products attacks the previous finish, removal of the previous coating may be necessary. If paint is peeling or badly weathered, clean surface to sound substrate and treat as a new surface as above.

Galvanized Steel
Allow to weather a minimum of six months prior to coating. Solvent Clean per SSPC-SP1. When weathering Is not possible, or the surface has been treated with chromates or silicates, first Solvent Clean per SSPC-SP1 and apply a test patch. Allow paint to dry at least one week before testing adhesion. If adhesion is poor, brush blasting per SSPC-SP7 is necessary to remove these treatments. Rusty galvanizing requires a minimum of Hand Tool Cleaning per SSPC-SP2, prime the area the same day as cleaned or before flash rusting occurs. Primer required.

Poured Concrete
New
For surface preparation, refer to SSPC-SP13/NACE 6, or ICRI 03732, CSP 1-3. Surfaces must be clean, dry, sound and offer sufficient profile to achieve adequate adhesion. Minimum substrate cure is 28 days at 75°F. Remove all form release agents, curing compounds, salts, efflorescence, laitance, and other foreign matter by sandblasting, shot-blasting, mechanical scarification, or suitable chemical means. Refer to ASTM D4260. Rinse thoroughly to achieve a final pH between 8.0 and 10.0. Allow to dry thoroughly prior to coating.
Old
Surface preparation is done in much the same manner as new concrete, however, if the concrete is contaminated with oils, grease, chemicals, etc., they must be removed by cleaning with a strong detergent. Refer to ASTM D4258. Form release agents, hardeners, etc. must be removed by sandblasting, shotblasting, mechanical scarification, or suitable chemical means. If surface deterioration presents an unacceptably rough surface, Kem Cati-Coat HS Epoxy Filler/Sealer is recommended to patch and resurface damaged concrete.
Fill all cracks, voids and bugholes with ArmorSeal Crack Filler.

Always follow the standard methods listed below:
ASTM D4258 Standard Practice for Cleaning Concrete.
ASTM D4259 Standard Practice for Abrading Concrete.
ASTM D4260 Standard Practice for Etching Concrete.
ASTM F1869 Standard Test Method for Measuring Moisture Vapor Emission Rate of Concrete.
SSPC-SP 13/Nace 6 Surface Preparation of Concrete.
ICRI 03732, Concrete Surface Preparation

APPLICATION CONDITIONS

Temperature:	40°F minimum, 120°F maximum (air, surface, and material) At least 5°F above dew point
Relative humidity:	85% maximum

APPLICATION EQUIPMENT

The following is a guide. Changes in pressures and tip sizes may be needed for proper spray characteristics. Always purge spray equipment before use with listed reducer. Any reduction must be compliant with existing VOC regulations and compatible with the existing environmental and application conditions.

Reducer .....Reducer #225, R7K225

Clean Up .....R6K30, MAK

Airless Spray
Pressure.....2400 - 3000 psi
Hose.....3/8" ID
Tip.....013" - .017"
Filter.....60 mesh
Reduction.....As needed up to 10% by volume

Conventional Spray
Gun.....Binks 95
Cap.....63P
Tip.....66
Atomization Pressure.....50 - 60 psi
Fluid Pressure.....20 - 30 psi
Reduction.....As needed up to 10% by volume

Brush
Brush.....Natural Bristle
Reduction.....As needed up to 10% by volume

Roller
Cover.....1/4" woven with phenolic core
Reduction.....As needed up to 10% by volume

If specific application equipment is not listed above, equivalent equipment may be substituted.

continued on back

MATERIAL SAFETY DATA SHEET

B65W525
04 00

DATE OF PREPARATION
Mar 25, 2009

SECTION 1 — PRODUCT AND COMPANY IDENTIFICATION

PRODUCT NUMBER
B65W525
PRODUCT NAME
POLY-LON® HP Polyester Polyurethane (Part A), Extra White
MANUFACTURER'S NAME
THE SHERWIN-WILLIAMS COMPANY
101 Prospect Avenue N.W.
Cleveland, OH 44115

Telephone Numbers and Websites

Product Information	www.sherwin-williams.com
Regulatory Information	(216) 566-2902 www.paintdocs.com
Medical Emergency	(216) 566-2917
Transportation Emergency*	(800) 424-9300
**for Chemical Emergency ONLY (spill, leak, fire, exposure, or accident)*	

SECTION 2 — COMPOSITION/INFORMATION ON INGREDIENTS

% by Weight	CAS Number	Ingredient	Units	Vapor Pressure
6	110-43-0	**Methyl n-Amyl Ketone**		
		ACGIH TLV	50 PPM	3.855 mm
		OSHA PEL	100 PPM	
10	123-86-4	**n-Butyl Acetate**		
		ACGIH TLV	150 PPM	10 mm
		ACGIH TLV	200 PPM STEL	
		OSHA PEL	150 PPM	
		OSHA PEL	200 PPM STEL	
4	108-65-6	**1-Methoxy-2-Propanol Acetate**		
		ACGIH TLV	Not Available	1.8 mm
		OSHA PEL	Not Available	
1	1332-58-7	**Kaolin**		
		ACGIH TLV	2 mg/m3 as Resp. Dust	
		OSHA PEL	10 mg/m3 Total Dust	
		OSHA PEL	5 mg/m3 Respirable Fraction	
17	13463-67-7	**Titanium Dioxide**		
		ACGIH TLV	10 mg/m3 as Dust	
		OSHA PEL	10 mg/m3 Total Dust	
		OSHA PEL	5 mg/m3 Respirable Fraction	

SECTION 3 — HAZARDS IDENTIFICATION

ROUTES OF EXPOSURE
INHALATION of vapor or spray mist.
EYE or SKIN contact with the product, vapor or spray mist.

HMIS Codes

Health	2*
Flammability	2
Reactivity	0

EFFECTS OF OVEREXPOSURE
EYES: Irritation.
SKIN: Prolonged or repeated exposure may cause irritation.
INHALATION: Irritation of the upper respiratory system.

May cause nervous system depression. Extreme overexposure may result in unconsciousness and possibly death.
Prolonged overexposure to solvent ingredients in Section 2 may cause adverse effects to the liver, urinary and blood forming systems.

SIGNS AND SYMPTOMS OF OVEREXPOSURE
Headache, dizziness, nausea, and loss of coordination are indications of excessive exposure to vapors or spray mists.
Redness and itching or burning sensation may indicate eye or excessive skin exposure.

When sanding or abrading the dried film, wear a dust/mist respirator approved by NIOSH/MSHA for dust which may be generated from this product, underlying paint, or the abrasive.

PROTECTIVE GLOVES

To prevent skin contact, wear gloves which are recommended by glove supplier for protection against materials in Section 2.

EYE PROTECTION

Wear safety spectacles with unperforated sideshields.

OTHER PROTECTIVE EQUIPMENT

Use barrier cream on exposed skin.

OTHER PRECAUTIONS

This product must be mixed with other components before use. Before opening the packages, READ AND FOLLOW WARNING LABELS ON ALL COMPONENTS.

Intentional misuse by deliberately concentrating and inhaling the contents can be harmful or fatal.

SECTION 9 — PHYSICAL AND CHEMICAL PROPERTIES

PRODUCT WEIGHT	11.51 lb/gal	1379 g/l
SPECIFIC GRAVITY	1.39	
BOILING POINT	255 - 308 °F	123 - 153 °C
MELTING POINT	Not Available	
VOLATILE VOLUME	34%	
EVAPORATION RATE	Slower than ether	
VAPOR DENSITY	Heavier than air	
SOLUBILITY IN WATER	N.A.	

VOLATILE ORGANIC COMPOUNDS (VOC Theoretical - As Packaged)

2.49lb/gal	299g/l	Less Water and Federally Exempt Solvents
2.49lb/gal	299g/l	Emitted VOC

SECTION 10 — STABILITY AND REACTIVITY

STABILITY — Stable

CONDITIONS TO AVOID

None known.

INCOMPATIBILITY

None known.

HAZARDOUS DECOMPOSITION PRODUCTS

By fire: Carbon Dioxide, Carbon Monoxide

HAZARDOUS POLYMERIZATION

Will not occur

SECTION 11 — TOXICOLOGICAL INFORMATION

CHRONIC HEALTH HAZARDS

Reports have associated repeated and prolonged overexposure to solvents with permanent brain and nervous system damage.

IARC's Monograph No. 93 reports there is sufficient evidence of carcinogenicity in experimental rats exposed to titanium dioxide but inadequate evidence for carcinogenicity in humans and has assigned a Group 2B rating. In addition, the IARC summary concludes, "No significant exposure to titanium dioxide is thought to occur during the use of products in which titanium is bound to other materials, such as paint."

TOXICOLOGY DATA

CAS No.	Ingredient Name			
110-43-0	**Methyl n-Amyl Ketone**			
		LC50 RAT	4HR	Not Available
		LD50 RAT		1670 mg/kg
123-86-4	**n-Butyl Acetate**			
		LC50 RAT	4HR	2000 ppm
		LD50 RAT		13100 mg/kg
108-65-6	**1-Methoxy-2-Propanol Acetate**			
		LC50 RAT	4HR	Not Available
		LD50 RAT		8500 mg/kg
1332-58-7	**Kaolin**			
		LC50 RAT	4HR	Not Available
		LD50 RAT		Not Available
13463-67-7	**Titanium Dioxide**			
		LC50 RAT	4HR	Not Available
		LD50 RAT		Not Available

tobeywade
STRUCTURAL ENGINEERS

October 2, 2009
Project No. R115-07-08

Mr. Tom Nelson
PHILIP SERVICES CORPORATION
ENVIRONMENTAL SERVICES DIVISION
2095 Newlands Drive East
Fernley, NV 89408

RE: PLANNED TANK T-1 CERTIFICATION REPORT

Dear Mr. Nelson:

In accordance with the Fernley Facility Amended Tank Replacement plan as prepared by PSC and dated March 25, 2008, each tank is required to be certified by Independent Registered Professional Engineers (IRPE's) prior to being placed into service. This letter has been prepared to document the evaluation of Planned Tank T-1 as performed by Tobey-Wade Consulting.

Background

Planned Tank T-1 will be a structural steel tank with a 7,000 gallon capacity. The tank will be fabricated by a licensed steel fabrication company. The tank structure has been designed by Tobey-Wade Consulting in accordance with 2006 International Building Code (IBC) and American Institute of Steel Construction (AISC) requirements.

Schiff Associates has evaluated the tank's suitability and compatibility for its proposed use in PSC's facility. Their conclusions have been provided under separate cover to PSC.

Findings

Based on our analysis, the following systems are hereby certified as being in compliance with the Amended Tank Replacement plan:

- Planned Tank T-1 will have sufficient strength to contain the proposed waste liquids without rupturing.
- Planned Tank T-1 will be situated on a reinforced concrete foundation system which is capable of adequately supporting the tank and its contents under static and dynamic conditions.
- Planned Tank T-1 will be located in an area with sufficient secondary containment as required by 40 CFR Ch. I, 264.193.

ADDITION DATE 10/09/09
REVISION NUMBER 1

NEVADA OFFICE
329 FLINT STREET ■ RENO, NEVADA 89501 ■ TEL: (775) 324.7757 ■ FAX: (775) 324.7797

- Planned Tank T-1 will be stabile against overturning when subjected to loads based on 2006 International Building Code level seismic events.

- Planned Tank T-1 will be anchored to prevent sliding when subjected to loads based on 2006 International Building Code level seismic events. Structural Observation and Special Inspection of the anchorage system will be performed as required by the IBC.

Structural Observation will be provided by Tobey-Wade Consulting under my direct supervision. Special Inspections will be performed by ICC-certified inspectors based on anchorage requirements provided by Tobey-Wade Consulting.

Certification Statement

I certify under penalty of law that this report and all attachments were prepared under my direction and supervision in accordance with a system developed to assure that qualified personnel properly gather and evaluate the information submitted. Based on my inquiry of the person or persons who manage the system or those persons directly responsible for gathering the information, the information, submitted is, to the best of my knowledge and belief, true, accurate, and complete. I am aware that there are significant penalties for submitting false information, including the possibility of fines and imprisonment for knowing violations.

This report has been prepared in accordance with acceptable engineering practices and is subject to the assumptions and limitations stated in the report. Also note that this certification covers the aforementioned aspects of Tank T-1 only.

Please feel free to contact me at your convenience should you have any questions relating to our findings.

Sincerely,
TOBEY-WADE CONSULTING

Terrence R. Tobey

Terrence R. Tobey, S.E.
Principal Structural Engineer

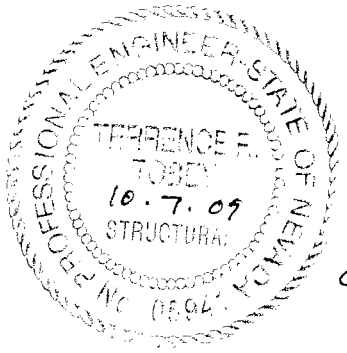

ADDITION DATE 10/09/09
REVISION NUMBER 1

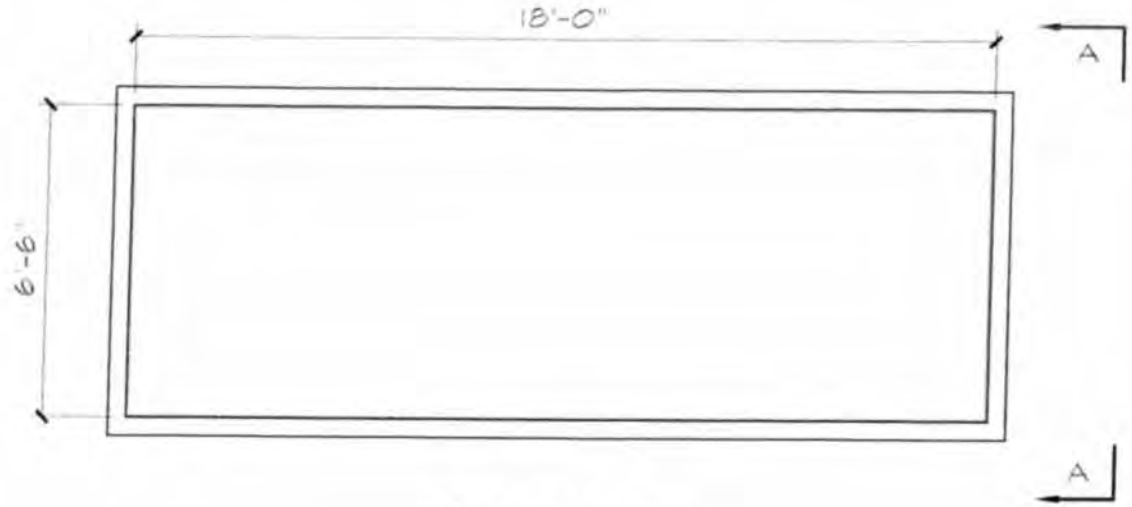

TANK NO. T-1
PLAN VIEW
N.T.S.

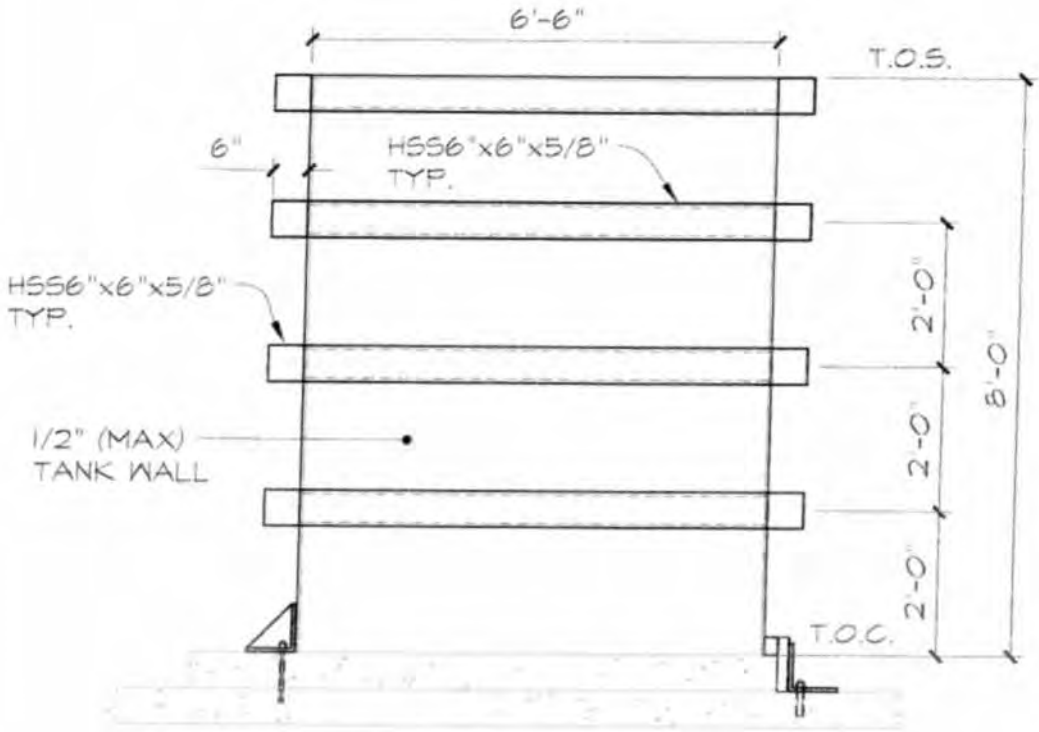

ELEVATION A-A
N.T.S.

tobey wade
CONSULTING
329 Flint Street
Reno, Nevada 89501
Tel. (775) 324-7757 Fax (775) 324-7797

PHILIP SERVICES CORPORATION
FERNLEY FACILITY
TANK NO. T-1
FERNLEY, NEVADA

Project No.
R115-07-08
D-1
Date: April 15, 2009

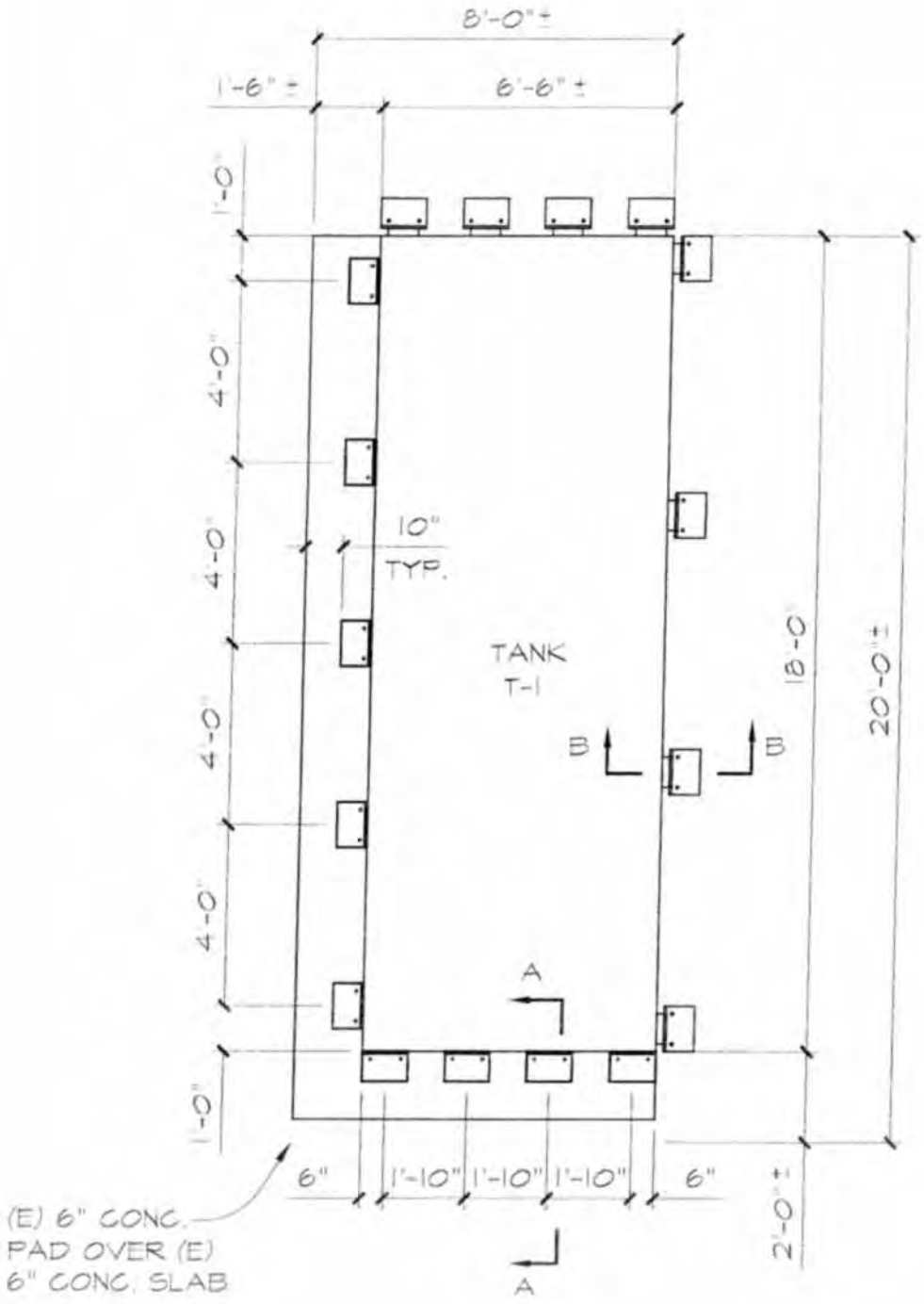

TANK NO. T-1
ANCHORAGE PLAN

SCALE: 1/4"=1'-0"

tobey wade
CONSULTING
329 Flint Street
Reno, Nevada 89501
Tel. (775) 324-7757 Fax (775) 324-7797

PHILIP SERVICES CORPORATION
FERNLEY FACILITY
TANK NO. T-1
FERNLEY, NEVADA

Project No.
R115-07-08

D-2

Date: April 15, 2009

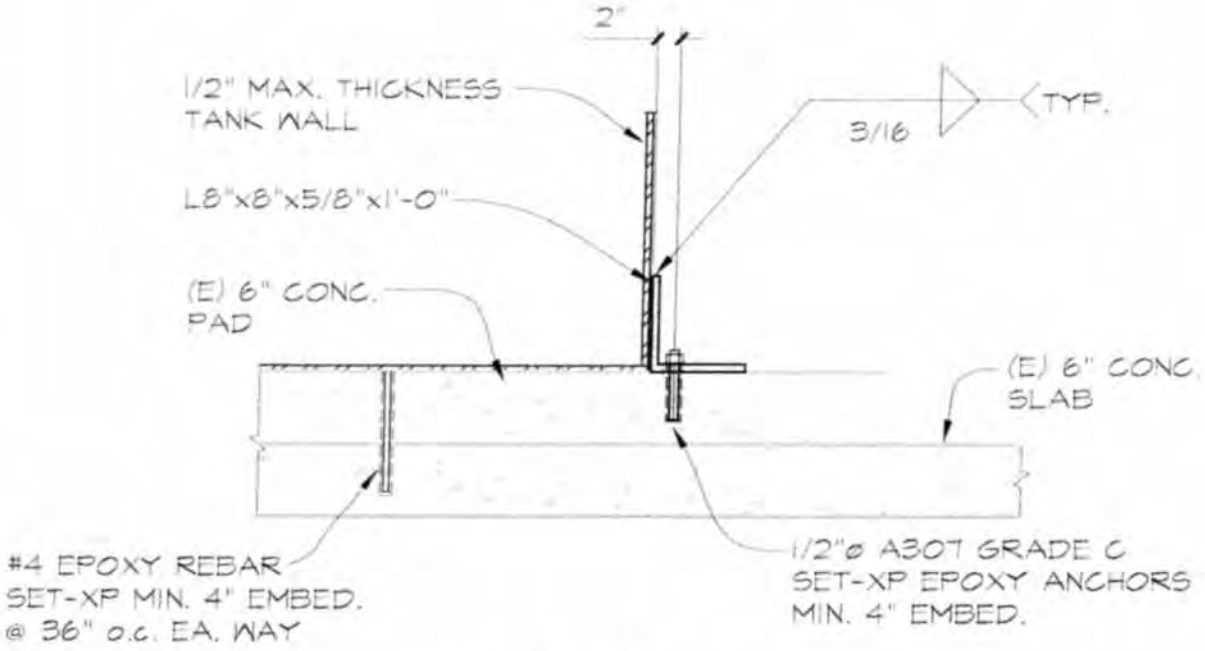

SECTION A-A

N.T.S.

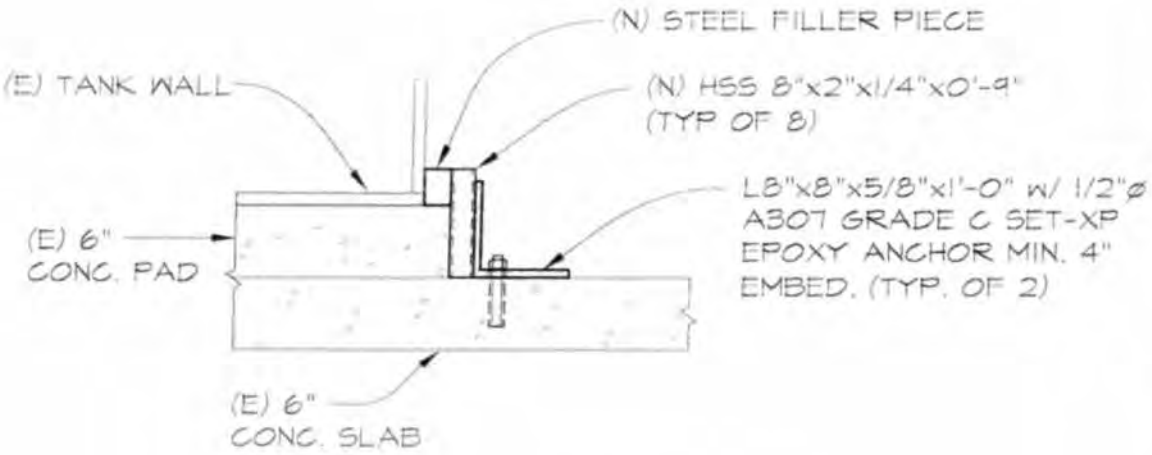

SECTION B-B

N.T.S.

tobey wade
CONSULTING
329 Flint Street
Reno, Nevada 89501
Tel. (775) 324-7757 Fax (775) 324-7797

PHILIP SERVICES CORPORATION
FERNLEY FACILITY
TANK NO. T-1
FERNLEY, NEVADA

Project No.
R115-07-08

D-3

Date: April 15, 2009

tobeywade
STRUCTURAL ENGINEERS

October 4, 2012
Project No. R115-12-12

Mr. Larry Wilson
Regional General Manager
PSC FERNLEY FACILITY
2095 Newlands Drive East
Fernley, NV 89408

RE: INTERIM TANK T-1 CERTIFICATION

Dear Mr. Wilson:

In accordance with the PSC - Fernley Tank Replacement Project Three Phase Approach plan as prepared by PSC and dated April 18, 2012, each tank is required to be certified by Independent Registered Professional Engineers (IRPE's) prior to being placed into service. This letter has been prepared to document the evaluation of Tank T-1 as performed by Tobey-Wade Consulting.

Please note that the installation of Tank T-1 is being performed under Phase 1 of the three phases of construction. Tank T-1 will be serviced by temporary flexible piping attached to the process piping connection located at the bottom of the tank near its mid-point. The permanent process piping servicing Tank T-1 will be installed in Phase 3 as outlined in the above-referenced April 18, 2012 Three Phase Approach plan. Accordingly, this certification is being provided as an interim certification. Final certification of Tank T-1 will be provided after the permanent piping and all other associated permanent systems have been installed and inspected.

Background

Tank T-1 is a structural steel tank with a working (design) capacity of 6,125 gallons. The tank has been designed in accordance with International Building Code (IBC) and American Institute of Steel Construction (AISC) requirements. The tank was fabricated by Peabody & Associates.

Infinity Corrosion Group, Inc. has evaluated the tank's suitability and compatibility for its proposed use in PSC's facility and has also certified the tank coating and lining systems. Their certifications have been provided under separate cover to PSC.

NEVADA OFFICE
329 FLINT STREET ■ RENO, NEVADA 89501 ■ TEL: (775) 324.7757 ■ FAX: (775) 324.7797

Findings

Based on our analysis, the following systems are hereby certified as being in compliance with the Amended Tank Replacement plan:

- Tank T-1 has sufficient strength to contain the proposed waste materials without rupturing.
- Tank T-1 is situated on a reinforced concrete foundation system which is capable of adequately supporting the tank and its contents under static and dynamic conditions.
- Tank T-1 is located in an area with sufficient secondary containment as required by 40 CFR Ch. I, 264.193.
- Tank T-1 is stabile against overturning when subjected to loads based on 2006 International Building Code level seismic events.
- Tank T-1 is anchored to prevent sliding when subjected to loads based on 2006 International Building Code level seismic events. Structural Observation and Special Inspection of the anchorage system has been performed as required by the International Building Code. The Structural Observation and Special Inspection reports are attached.
- Tank T-1 has been tested for leakage and found to be watertight. The Tank Leakage Test results are included in the Tank Inspection Report, copy attached.
- The exterior of Tank T-1's shell wall has been inspected and found to be undamaged. The Tank Shell Inspection results are included in the Tank Inspection Report, copy attached.
- The process piping connection has been inspected and found to be undamaged and with no evidence of leakage. The piping connection has adequate anchorage to prevent displacement during an earthquake. The associated process piping connection inspection form is attached.

Structural Observation, tank leakage and tank shell inspections were performed by Tobey-Wade Consulting, under my direct supervision. Special Inspections were performed by ICC-certified inspectors from Black Eagle Consulting based on anchorage requirements provided by Tobey-Wade Consulting.

Certification Statement

I certify under penalty of law that this report and all attachments were prepared under my direction and supervision in accordance with a system developed to assure that qualified personnel properly gather and evaluate the information submitted. Based on my inquiry of the person or persons who manage the system or those persons directly responsible for gathering the information, the information, submitted is, to the best of my knowledge and belief, true, accurate, and complete. I am aware that there are significant penalties for submitting false information, including the possibility of fines and imprisonment for knowing violations.

This report has been prepared in accordance with acceptable engineering practices and is subject to the assumptions and limitations stated in the report. Also note that this certification covers the aforementioned aspects of Tank T-1 only.

Please feel free to contact me at your convenience should you have any questions relating to our findings.

Sincerely,
TOBEY-WADE CONSULTING

Terrence R. Tobey

TERRENCE R. TOBEY, P.E., S.E.
Principal Structural Engineer

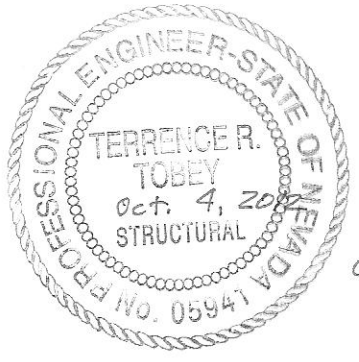

Exp.
6·30·12

TANK DATA SHEET

RCRA-Regulated? YES
Tank Location: DETOX ROOM
Tank Name: TREATMENT TANK
Tank Numbers: T - 1, T - 2, T - 3
Process Description: WASTE NEUTRALIZATION, TREATMENT
Vessel Fluid: AQUEOUS-BASED WASTE LIQUIDS
Specific Gravity: ≤ 1.50 Freeboard At Working Vol (ft^3): 1' – 0"
Normal Operating Pressure (psig): ATMOSPHERIC Temperature (°F): AMBIENT

	Material	Thickness	Type
Bottom	CARBON STEEL PLATE	5/16" NOMINAL	FLAT
Shell	CARBON STEEL PLATE	5/16" NOMINAL	STRAIGHT
Roof	CARBON STEEL PLATE	¼" NOMINAL	FLAT, BOLTED

Working Volume (USG): 6,125 GALLONS Insulation: NONE
Nominal Volume (USG): 7,000 GALLONS Method of Construction: WELDED STEEL
Tank I.D. (ft): 6'-6" x 18'-0" Tank Height or Length (ft): 8' – 0"
Design Code Used: 2006 IBC Date in Service: PLANNED Tanks
Anchorage: BOLTED TO CONCRETE. Anchorage designs per 2006 IBC.

Connections

Item No.	Size (In.)	Gasket	Description
1	24"		ROOF MANWAY
2	4"		SIDE FLANGE NOZZLE
3	3"		FILL NOZZLE
4	8"		MIXER NOZZLE
5	4"		VENT FLANGE NOZZLE
6	4"		FLANGE ROOF NOZZLE
7	3"		FLANGE ROOF NOZZLE
8	2"		LEVEL SENSOR CONN.
9	1 ½"		FLANGE NOZZLES (3)
10			
11			
12			
13			
14			
15			

Tank Sketch

Interior Coating: POLYSPEC VINYL ESTER NOVOLAC SYSTEM.
Exterior Coating: BASECOAT EPOXY, TOPCOAT POLYURETHANE ENAMEL.
Tank Mfger: to be determined.

Remarks: Planned tanks for replacement of existing tanks T-1, T-2, and T-3.

TANK INSPECTION FORM

Philip Services Corporation / 21 EMI
PSC Fernley Facility
2095 Newlands Drive East
Fernley, NV 89408
(775)575-2760

TANK NO.: T - 1

TANK SHELL INSPECTION

Date Inspected: August 1, 2012 11:30 A.M.

Findings: Shell is in good condition and coated.

TANK ANCHORAGE STRUCTURAL OBSERVATION

Type of Anchorage System: See Plans

Date Inspected: 8-1-2012

# of Anchor Plates: 12

AB Type and Diameter: 1/2" ϕ

Plate Contact with Tank: N/A

Special Inspection Completed? Yes

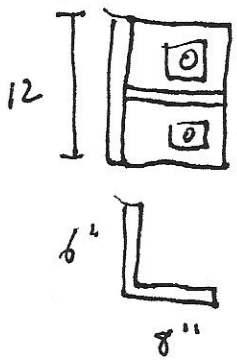

TANK LEAKAGE TEST

Date Filled: 8-1-2012 Water Level below Inspection Hatch: 23.5" From Top of TS

Date of Re-inspection: 8-2-12 Water Level below Inspection Hatch: 23.5" from top

Shell Leakage? No - 8-1-2012

Leakage on Floor/Drain Pan at Manifold?

INSPECTOR: [signature] **DATE:** August 1, 2012

INSPECTOR: Terrence R. Tobey **DATE:** Aug. 2, 2012

TANK INSPECTION FORM

Philip Services Corporation / 21 EMI
PSC Fernley Facility
2095 Newlands Drive East
Fernley, NV 89408
(775)575-2760

TANK NO.: T-1

TANK SHELL INSPECTION Process Piping Connection

Date Inspected: 9/26/12

Findings: No Damage to Process Piping Connection assembly or to Tank Shell. No Evidence of Leaks.

TANK ANCHORAGE STRUCTURAL OBSERVATION

Type of Anchorage System: N/A

Date Inspected:

# of Anchor Plates:

AB Type and Diameter:

Plate Contact with Tank:

Special Inspection Completed?

TANK LEAKAGE TEST N/A

Date Filled: Water Level below Inspection Hatch:

Date of Re-inspection: Water Level below Inspection Hatch:

Shell Leakage?

Leakage on Floor/Drain Pan at Manifold?

INSPECTOR: Brad G C **DATE:** 9/26/12

INSPECTOR: _____ **DATE:** _____

SPECIAL INSPECTOR DAILY REPORT

BLACK EAGLE CONSULTING, INC.
GEOTECHNICAL AND CONSTRUCTION SERVICES
1345 Capital Boulevard, Suite A
Reno, NV 89502-7140
Phone: (775) 359-6600
Fax: (775) 359-7766

Project: PSC-Tank Replacement	Project Number: 560-03-1	Date: 7/10/12
Client: PSC	Contact: Frank	Total Hrs.: 3.5
Location: Fernley, NV	Weather: Sunny	Temp.: 95
Contractor: L&H Concrete	Contact:	Stand By Hrs.:
Equipment in Use:		

Describe Inspections Made, Including Locations: I observed epoxy slab anchor installation for the T-1 Tank pad.
Eighteen #4 rebar slab anchors were installed. I observed the contractor blowing and brushing the holes prior to epoxy installation
and verified at least 4" embedment depth and anchors were 9.5" long. Simpson SET XP epoxy with an expiration date of
8/31/12 was used. Installation was per detail S1.2 on sheet TS1.2. I observed Sikadur 32 Himod epxoy bonding agent was
placed on the existing concrete surface prior to concrete pad placement. I observed that the pad rebar was #4 18" OC each way.
No discrepancies were observed.

List Test Made: Cast 1 set of concrete test cylinders, slump = 5.5" with 1/2 gal plasticizer, air content = 2.4%, PCC
Temp = 89 deg.

List Items Requiring Correction, Corrections of Previously Listed Items, and Previously Listed Uncorrected Items:

List Changes to Approved Plans Authorized by the Building Official and Architect or Engineer:

Comments:

Signed: Mitch Fink Date: 7-10-12

Print Full Name: Mitchell Fink I.D. Number: 201522

Reviewed by: MWF Date:

PSC FERNLEY FACILITY

EPOXY ANCHORS - SPECIAL INSPECTION CHECKLIST

TANK NO./EQUIPMENT NAME: T-1 Tank Pad

LOCATION: Fernley, NV

INSPECTING FIRM & INSPECTOR: Black Eagle Consulting Mitch Funk

DATE: 7-10-12

ANCHORS SUBJECT TO PERIODIC INSPECTION

- Anchor Type — Simpson SET-XP (yes/no) Yes
- Anchor Material and Grade — #4 rebar, 60 grade
- Anchor Diameter — 1/2"
- Anchor Length — 9.5"
- Hole Location per Details — Yes
- Hole Diameter — 5/8"
- Hole Embedment Depth — 4" minimum
- Hole Cleaning Procedure

	Yes/No
a. Remove dust with oil free compressed air (Min. 4 seconds)	Yes
b. Clean with Nylon Brush (minimum 4 cycles)	Yes
c. Remove dust with oil free compressed air (Min.4 seconds)	Yes

- Anchor Spacing per Details — Yes
- Edge Distance per Details — Yes
- Anchor Embedment — 4" minimum
- Tightening Torque — N/A
- Adhesive Type — Simpson SET-XP (yes/no) Yes
- Expiration Date — 8/31/12
- Adhesive Installation Method per Simpson requirements (yes/no) Yes

DAILY FIELD REPORT

Page 1 of 1

BLACK EAGLE CONSULTING, INC.
GEOTECHNICAL AND CONSTRUCTION SERVICES
1345 Capital Blvd., Suite A, Reno, Nevada 89502-7140
Phone (775) 359-6600 Fax (775) 359-7766

Project: PSC TANK REPLACEMENT	Project No.: 0560-07-1	Date: 07/11/2012
Client: PHILLIPS SERVICES CORP.	Contact: FRANK	Total Hrs.: 1.5
Location: FERNLEY, NV	Weather: CLEAR	Temp.: °F
Contractor: L & H CONCRETE	Contact:	Stand By Hrs.: 0

TYPE OF INSPECTION/TESTING

	Site Inspection		Const. Materials Sampling
	Construction Observations		Batch Plant Inspection
	Earthwork/Mass Grading		Coring Asphalt/Concrete
	Footings/Foundations		Bldg. Pad Certification
	Utilities (Gas, Elect., Water)		Reinforcing Steel Inspection
	Aggregate Base		Structural Welding/Bolting
	Asphalt Paving		Masonry Inspection
	Portland Cement Concrete		Fire Proofing Inspection
	Other		Other

CONCRETE, GROUT, & MORTAR TEST DATA

Set No.						
Mix No.						
Time am. pm.						
Truck No.						
Amb.Temp. °F						
Mix Temp. °F						
Slump, inches						
Air Content, %						
Other						

NUCLEAR FIELD DENSITY SUMMARY

Test No.	Test Location and Elevation Reference	Probe Depth (in)	Dry Density (pcf)	Moisture Content (%)	Max. Dry Density (pcf)	Optimum Moisture (%)	Relative Compaction (%) Actual	Relative Compaction (%) Specs

Equipment in use:

Observations/Comments: RETRIEVED 4 4x8 PLC CYLINDERS FROM PSC TANK REPLACEMENT SITE AND DELIVERED TO LAB. CYLINDERS WERE FROM YESTERDAY'S CONCRETE POUR FOR THE T-1 TANK PAD.

AB=Agg.Base BS=Bedding Sand B=Below BG=Below Grade FG=Finish Grade FTG=Footing SF=Structural Fill SG=Subgrade SOG=Slab On Grade

Reviewed By [signature] Technician [signature] Report No.

White to *Office* Canary to *Field File* Green to *Personal File*

cc:

QA/QC DFR # 1

COMPRESSIVE STRENGTH TEST REPORT

REPORT TO:	Philip Services Corporation	PROJECT NAME:	PSC Tank Replacement PO 12103-2
	2095 Newlands Drive	PROJECT NO.:	0560-03-1
	Fernley, NV 89408	DATE SAMPLED:	July 10, 2012
ATTENTION:	Mr. Aubry Burgess	SAMPLED BY:	Mitchell Fink
STRUCTURE:	T-1 Tank Concrete Pad		
LOCATION IN STRUCTURE:	Center of Pad		

FIELD DATA

MATERIAL SAMPLED:	Portland Cement Concrete	SET NO:	1
CONTRACTOR:	L & H Concrete	TIME CAST:	1:30 PM
SUPPLIER:	3D Concrete	TRUCK NO:	84
MIX I.D. NO.:	1126RP	TICKET NO.:	23554
REQ. STRENGTH (28-DAY) psi:	4,000	MIX TEMPERATURE:	89 °F
ADMIXTURES:	Fibers, 55 oz Recover, 1/2 Gallon Plasticizer	SLUMP:	5.5 in
CUBIC YARDS PLACED:	5.5	AIR CONTENT:	2.4 %
FIELD NOTES:	5 Gallons of Water Added	AMBIENT TEMPERATURE:	97 °F
REMARKS			

LABORATORY DATA

SAMPLE I.D.	9284	9285	9286	9287	
DATE TESTED:	7/17/2012	8/7/2012	8/7/2012	8/7/2012	
AGE, DAYS:	7	28	28	28	
DIMENSION [dia. X ht.] (in):	4 X 8	4 X 8	4 X 8	4 X 8	
AREA, SQUARE (in^2):	12.57	12.57	12.57	12.57	
ULTIMATE LOAD (lbs)	60,840	66,090	67,600	66,610	
TYPE OF FRACTURE: *	A	B	C	B	
COMPRESSIVE STRENGTH (psi)	4,840	5,260	5,380	5,300	
DATE RECEIVED:	7/11/12	CAPPING METHOD:	Neoprene Caps	AVERAGE 28-DAY STRENGTH (psi):	5,310

DISTRIBUTION:

James Quinn - 3D Concrete (email)

Respectfully Submitted by:
Patrick A. Pilling, Ph.D., P.E., D.GE. - President

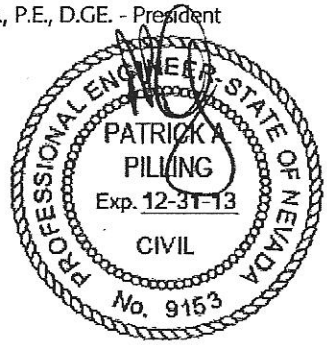

BLACK EAGLE CONSULTING, INC.
1345 Capital Boulevard, Suite A
Reno, Nevada 89502

8-17-12

*TYPES OF FRACTURES: A = CONE; B = CONE & SPLIT; C = CONE & SHEAR; D = SHEAR; E = COLUMNAR

TESTING AND SAMPLING WERE PERFORMED IN ACCORDANCE WITH ASTM C39, C78, C143, C172, C173, C231, AND C617 STANDARDS AS APPLICABLE

DAILY FIELD REPORT

BLACK EAGLE CONSULTING, INC.
GEOTECHNICAL AND CONSTRUCTION SERVICES
1345 Capital Boulevard, Suite A
Reno, NV 89502-7140
Phone: (775) 359-6600
Fax: (775) 359-7766

Project: 3 TANK REPLACEMENTS	Project Number: 0560-03-1	Date: 3-23 + 3-30-12
Client: PHILIPS SERVICES	Contact: Aubry Burgess	Total Hrs.: 6
Location: Peabody INC	Weather:	Temp.:
Contractor:	Contact:	Stand By Hrs.:

TYPE OF INSPECTION/TESTING		CONCRETE, MORTAR & GROUT TEST DATA						
☐ Site Inspection	☐ Const. Materials Sampling	Set No.						
☐ Construction Observations	☐ Batch Plant Inspection	Mix No.						
☐ Earthwork/Mass Grading	☐ Coring Asphalt/Concrete	Time a.m. p.m.						
☐ Footings/Foundations	☐ Bldg. Pad Certification	Truck No.						
☐ Utilities (Gas, Elect, Wtr)	☐ Reinforcing Steel Insp.	Amb. Temp °F						
☐ Aggregate Base	☒ Structural Welding/Bolting	Mix. Temp °F						
☐ Asphalt Paving	☐ Masonry Inspection	Slump, inches						
☐ Portland Cement Concrete	☐ Fire Proofing Inspection	Air Content, %						
☐ Other	☐ Other	Other						

Equipment in use:

Observations/Comments:

CHECKED WELDER QUALIFICATIONS, PROCEDURES AND FITUP.

AB = Agg Base BS = Bedding Sand B = Below BG = Below Grade FG = Finished Grade FTG = Footing SF = Structural Fill SG = Subgrade SOG = Slab-on Grade

Reviewed By	Technician	Report No.

DAILY FIELD REPORT

BLACK EAGLE CONSULTING, INC.
GEOTECHNICAL AND CONSTRUCTION SERVICES
1345 Capital Boulevard, Suite A
Reno, NV 89502-7140
Phone: (775) 359-6600
Fax: (775) 359-7766

Project: 3 TANK Replacements	Project Number: 0560-03-1	Date: 4-2 - 4/6
Client: PHILIPS Services	Contact: Aubry Burgess	Total Hrs.: 12½ Hrs
Location: Peabody INC	Weather:	Temp.:
Contractor:	Contact:	Stand By Hrs.:

TYPE OF INSPECTION/TESTING		CONCRETE, MORTAR & GROUT TEST DATA						
☐ Site Inspection	☐ Const. Materials Sampling	Set No.						
☐ Construction Observations	☐ Batch Plant Inspection	Mix No.						
☐ Earthwork/Mass Grading	☐ Coring Asphalt/Concrete	Time a.m. p.m.						
☐ Footings/Foundations	☐ Bldg. Pad Certification	Truck No.						
☐ Utilities (Gas, Elect, Wtr)	☐ Reinforcing Steel Insp.	Amb. Temp °F						
☐ Aggregate Base	☒ Structural Welding/Bolting	Mix. Temp °F						
☐ Asphalt Paving	☐ Masonry Inspection	Slump, inches						
☐ Portland Cement Concrete	☐ Fire Proofing Inspection	Air Content, %						
☐ Other	☐ Other	Other						

Equipment in use:

Observations/Comments:

Went over welding specification and inspected weld quality, ALL is acceptable in accordance with AWS D1.1.

AB = Agg Base BS = Bedding Sand B = Below BG = Below Grade FG = Finished Grade FTG = Footing SF = Structural Fill SG = Subgrade SOG = Slab-on Grade

Reviewed By	Technician	Report No.

DAILY FIELD REPORT

BLACK EAGLE CONSULTING, INC.
GEOTECHNICAL AND CONSTRUCTION SERVICES
1345 Capital Boulevard, Suite A
Reno, NV 89502-7140
Phone: (775) 359-6600
Fax: (775) 359-7766

Project: 3 TANK Replacements	Project Number: 0560-03-1	Date: 4/9 - 4/13/12
Client: Philips Services	Contact: Aubry Burgess	Total Hrs.: 15 1/2
Location: Peabody INC	Weather:	Temp.:
Contractor:	Contact:	Stand By Hrs.:

TYPE OF INSPECTION/TESTING		CONCRETE, MORTAR & GROUT TEST DATA						
☐ Site Inspection	☐ Const. Materials Sampling	Set No.						
☐ Construction Observations	☐ Batch Plant Inspection	Mix No.						
☐ Earthwork/Mass Grading	☐ Coring Asphalt/Concrete	Time a.m. p.m.						
☐ Footings/Foundations	☐ Bldg. Pad Certification	Truck No.						
☐ Utilities (Gas, Elect, Wtr)	☐ Reinforcing Steel Insp.	Amb. Temp °F						
☐ Aggregate Base	☐ Structural Welding/Bolting	Mix. Temp °F						
☐ Asphalt Paving	☐ Masonry Inspection	Slump, inches						
☐ Portland Cement Concrete	☐ Fire Proofing Inspection	Air Content, %						
☐ Other	☐ Other	Other						

Equipment in use:

Observations/Comments:

ALL welding is acceptable - to date. TWO TANK SHELLS are complete.

AB = Agg Base BS = Bedding Sand B = Below BG = Below Grade FG = Finished Grade FTG = Footing SF = Structural Fill SG = Subgrade SOG = Slab-on Grade

Reviewed By	Technician	Report No.

DAILY FIELD REPORT

BLACK EAGLE CONSULTING, INC.
GEOTECHNICAL AND CONSTRUCTION SERVICES
1345 Capital Boulevard, Suite A
Reno, NV 89502-7140
Phone: (775) 359-6600
Fax: (775) 359-7766

Project: 3 TANK Replacement TS	Project Number: 0560-03-1	Date: 4/16 - 4/18
Client: Philips Services	Contact: Aubry Burgress	Total Hrs.: 8 1/2
Location: Peabody FNC	Weather:	Temp.:
Contractor:	Contact:	Stand By Hrs.:

TYPE OF INSPECTION/TESTING		CONCRETE, MORTAR & GROUT TEST DATA						
☐ Site Inspection	☐ Const. Materials Sampling	Set No.						
☐ Construction Observations	☐ Batch Plant Inspection	Mix No.						
☐ Earthwork/Mass Grading	☐ Coring Asphalt/Concrete	Time a.m. p.m.						
☐ Footings/Foundations	☐ Bldg. Pad Certification	Truck No.						
☐ Utilities (Gas, Elect, Wtr)	☐ Reinforcing Steel Insp.	Amb. Temp °F						
☐ Aggregate Base	☐ Structural Welding/Bolting	Mix. Temp °F						
☐ Asphalt Paving	☐ Masonry Inspection	Slump, inches						
☐ Portland Cement Concrete	☐ Fire Proofing Inspection	Air Content, %						
☐ Other	☐ Other	Other						

Equipment in use:

Observations/Comments:

welding on third tank is complete and welding on the three lids are complete.

AB = Agg Base BS = Bedding Sand B = Below BG = Below Grade FG = Finished Grade FTG = Footing SF = Structural Fill SG = Subgrade SOG = Slab-on Grade

Reviewed By	Technician	Report No.

DAILY FIELD REPORT

BLACK EAGLE CONSULTING, INC.
GEOTECHNICAL AND CONSTRUCTION SERVICES
1345 Capital Boulevard, Suite A
Reno, NV 89502-7140
Phone: (775) 359-6600
Fax: (775) 359-7766

Project: 3 TANK Replacements	Project Number: 0560-03-1	Date: 4/18/12
Client: PHilips Services	Contact: Aubry Burgess	Total Hrs.:
Location: Peabody, INC	Weather:	Temp.:
Contractor:	Contact:	Stand By Hrs.:

TYPE OF INSPECTION/TESTING		CONCRETE, MORTAR & GROUT TEST DATA						
☐ Site Inspection	☐ Const. Materials Sampling	Set No.						
☐ Construction Observations	☐ Batch Plant Inspection	Mix No.						
☐ Earthwork/Mass Grading	☐ Coring Asphalt/Concrete	Time a.m. p.m.						
☐ Footings/Foundations	☐ Bldg. Pad Certification	Truck No.						
☐ Utilities (Gas, Elect, Wtr)	☐ Reinforcing Steel Insp.	Amb. Temp °F						
☐ Aggregate Base	☒ Structural Welding/Bolting	Mix. Temp °F						
☐ Asphalt Paving	☐ Masonry Inspection	Slump, inches						
☐ Portland Cement Concrete	☐ Fire Proofing Inspection	Air Content, %						
☐ Other	☐ Other	Other						

Equipment in use:

Observations/Comments: From 3/23 thru 4/18 Peabody INC Fabricated 3 Replacement tanks For PHilips Services. The three tanks were Fabricated to plans and Specifications and all welding is in accordance with AWS D1.1.

AB = Agg Base BS = Bedding Sand B = Below BG = Below Grade FG = Finished Grade FTG = Footing SF = Structural Fill SG = Subgrade SOG = Slab-on Grade

Reviewed By	Technician	Report No.

SPECIAL INSPECTOR DAILY REPORT

Page 1 of 1

BLACK EAGLE CONSULTING, INC.
GEOTECHNICAL AND CONSTRUCTION SERVICES
1345 Capital Blvd., Suite A, Reno, Nevada 89502-7140
Phone (775) 359-6600 Fax (775) 359-7766

Project: PSC Fernley - Tank T-1	Project No.: 560-03-1	Date: 7-27-12
Client: PSC	Contact: Frank	Total Hrs.: 3
Location: Fernley NV	Weather:	Temp.:
Contractor: Bragg Crane	Contact: Vic	Stand By Hrs.:

Equipment in use:

Describe Inspections Made, Including Locations: Epoxy inspection of 1/2" ø x 6" all thread using Simpson XP ICC ES-ESR 2508 expansion 1-17 & 5/8" ø carbide bit used for drilling holes. AB's for T1 tank embeded a minimum of 4"
Epoxy used as per manufacturers recommendations

See Below

List Tests Made: T1

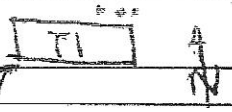

List Items Requiring Correction, Corrections of Previously Listed Items, and Previously Listed Uncorrected Items:
A) (3) Holes located @ NEC of T1 @ 3 1/2" embedment
Due to rebar encountered. Need RFI for fix or acceptance

List Changes to Approved Plans Authorized by the Building Official and Architect or Engineer:

Comments: Informal Terrance Toby of above, as requested by PSC

Signed: Daniel W McEwing Date: 7-27-12

Print Full Name: Daniel W McEwing I.D. Number: 0876902 [illegible]

Reviewed By mv Date

White to *Client* Canary to *Office File* Green to *Field File*

cc:

QA/QC SIDR # 4

tobeywade
STRUCTURAL ENGINEERS

Memo

Date: August 1, 2012

To: Brian Cape - PSC

Cc:

From: Terrence Tobey, S.E.

RE: Tank T-1 Anchor Embedment

It has come to our attention that three epoxy anchors located at the northeast corner of Tank T-1 were installed with an embedment of 3.5 inches instead of the specified 4 inches. The reduced anchor rod embedment was due to reinforcing steel which was encountered when the holes were drilled.

We have reviewed the design of the anchorage system and determined that the reduced embedment does not adversely affect our design.

Please feel free to contact us should you have any questions regarding our findings.

329 Flint Street Reno, Nevada 89501 (775) 324-7757 Fax (775) 324-7797

PSC FERNLEY FACILITY

EPOXY ANCHORS - SPECIAL INSPECTION CHECKLIST

TANK NO./EQUIPMENT NAME: T-1

LOCATION: Fernley

INSPECTING FIRM & INSPECTOR: BEC - Dan McEuen

DATE: 7-27-12

ANCHORS SUBJECT TO CONTINUOUS INSPECTION

- Anchor Type — Simpson SET-XP (yes/no) yes
- Anchor Material and Grade — A1 threaded
- Anchor Diameter — 1/2"
- Anchor Length — 6"
- Hole Location per Details — yes
- Hole Drilling Method - Rotary hammer with carbide-tipped drill bits (yes/no) yes
- Hole Diameter — 5/8
- Hole Embedment Depth — 4" with exception noted on daily report
- Hole Cleaning Procedure

	Yes/No
a. Remove dust with oil free compressed air (Min. 4 seconds)	Yes
b. Clean with Nylon Brush (minimum 4 cycles)	yes
c. Remove dust with oil free compressed air (Min.4 seconds)	Yes

- Anchor Spacing per Details — yes
- Edge Distance per Details — yes
- Anchor Embedment — 4" with exception noted
- Tightening Torque — Torque tested on 7-30-12
- Adhesive Type — Simpson SET-XP (yes/no) yes
- Expiration Date — 1-14
- Adhesive Installation Method per Simpson requirements (yes/no) yes

SPECIAL INSPECTOR DAILY REPORT

BLACK EAGLE CONSULTING, INC.
GEOTECHNICAL AND CONSTRUCTION SERVICES
1345 Capital Boulevard, Suite A
Reno, NV 89502-7140
Phone: (775) 359-6600
Fax: (775) 359-7766

Project: PSC Tank – Fernley Tank T-1	**Project Number: 0560-03-1**	**Date: 7-30-12**
Client: PSC	**Contact: Frank**	**Total Hrs.: 2.5**
Location: Fernley, NV	**Weather: Clear**	**Temp:**
Contractor: Bragg Crane	**Contact: Bick**	**Stand By Hrs.:**

Equipment in Use:

Describe Inspections Made, Including Locations: Arrived on jobsite to perform a torque inspection on the Tank T-1. (24) ½" Dia. A307 all thread bolt previously placed and torqued to a min of 20lbs. No Problems Noted.

List Test Made:

List Items Requiring Correction, Corrections of Previously Listed Items, and Previously Listed Uncorrected Items:

List Changes to Approved Plans Authorized by the Building Official and Architect or Engineer:

Comments:

Signed: **Date:** 7-30-12

Print Full Name: Adam E Hutchings **I.D. Number:** 5223832

Reviewed by: RW **Date:**

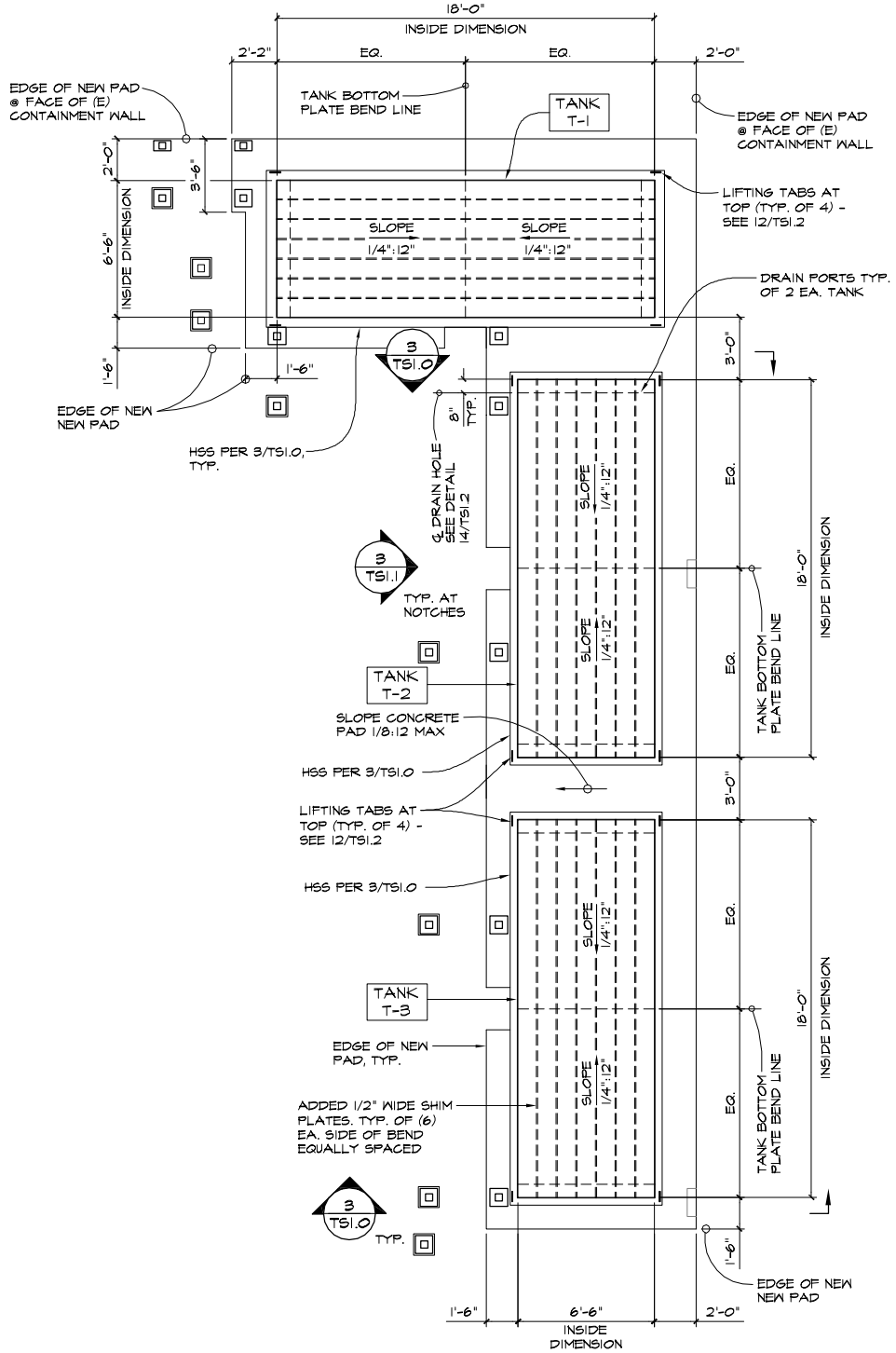

TANK NO. T-1, NO. T-2 AND NO. T-3 PLAN VIEW (PHASE 1 CONSTRUCTION)

1 TS1.0

SCALE: 1/4"=1'-0"

NOTES: 1. SEE 1/TS1.1 FOR ANCHORAGE PLAN.
2. SEE TS1.2 FOR TANK LID PLAN & DETAILS.
3. FOR LOCATION OF HSS COLUMNS, SEE S2.0.

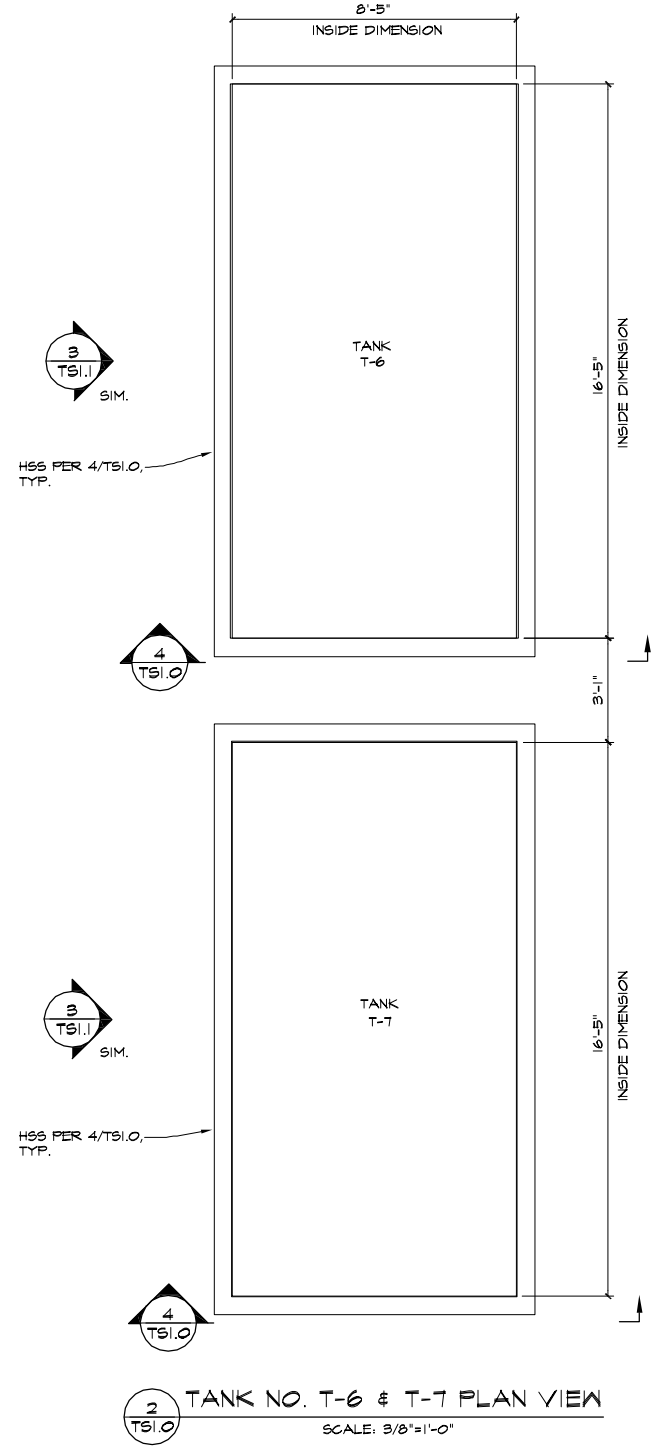

TANK NO. T-6 & T-7 PLAN VIEW

2 TS1.0

SCALE: 3/8"=1'-0"

NOTES: 1. SEE DETAIL 1/TS1.3 FOR ANCHORAGE PLAN.
2. SEE TS1.2 FOR TANK LID PLAN & DETAILS.

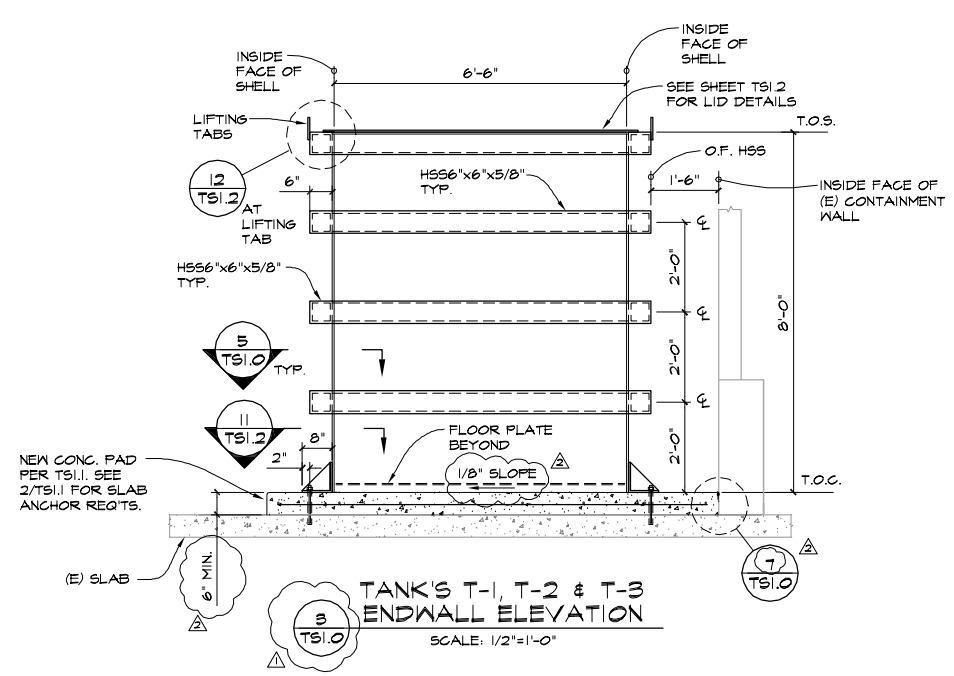

TANK'S T-1, T-2 & T-3 ENDWALL ELEVATION

3 TS1.0

SCALE: 1/2"=1'-0"

NOTES: 1. TANK SIDEWALLS ARE SIMILAR.

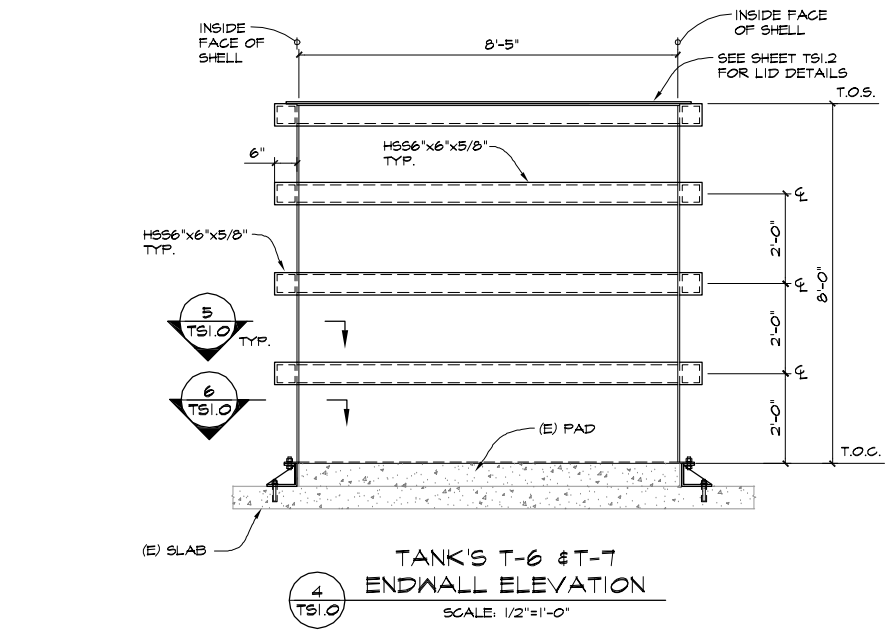

TANK'S T-6 & T-7 ENDWALL ELEVATION

4 TS1.0

SCALE: 1/2"=1'-0"

NOTES: 1. TANK SIDEWALLS ARE SIMILAR.

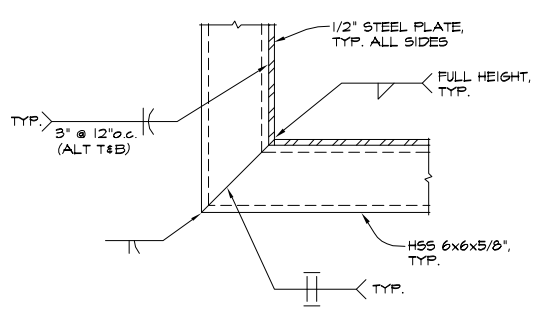

SECTION AT CORNER

5 TS1.0

SCALE: 1 1/2"=1'-0"

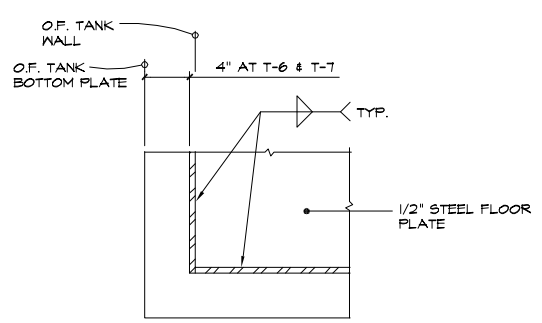

FLOOR PLATE DETAIL

6 TS1.0

SCALE: 1 1/2"=1'-0"

NOTE: 1. ANCHORAGE ANGLE NOT SHOWN.

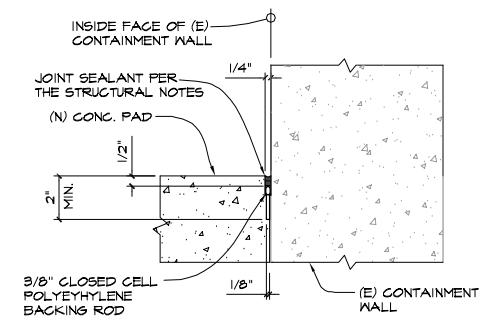

JOINT SEALANT DETAIL

7 TS1.0

N.T.S.

NOTES: 1. REINFORCING NOT SHOWN FOR CLARITY.

ISSUED FOR PERMIT

© TOBEY WADE CONSULTING
THIS DRAWING IS THE PROPERTY OF TOBEY WADE CONSULTING. USE OR REPRODUCTION OF THIS DRAWING, IN WHOLE OR IN PART, IS PROHIBITED. THIS SHEET IS FURNISHED BY TOBEY WADE CONSULTING AS AN INSTRUMENT OF PROFESSIONAL SERVICE. THE DRAWING IS NOT TO BE USED FOR ANY PROJECT OTHER THAN THE ONE FOR WHICH IT WAS PREPARED.

tobey wade
CONSULTING
329 Flint Street
Reno, Nevada 89501
Tel. (775) 324-7757 Fax (775) 324-7797

TANK NO.'S T-1 THRU T-3, T-6 & T-7 PLANS AND DETAILS

PSC FERNLEY - TANK REPLACEMENT PROJECT

PREPARED FOR
AUSENCO PSI

FERNLEY
LYON COUNTY
NEVADA

REVISIONS		
NO.	DESCRIPTION/DATE	BY
1	REVISED TANK T-1 - T-3 FLOOR PLATE & ANCHORAGE 8/2/12	TRT
2	CONSTRUCTION CHANGES 8/7/12	JAB

EXPIRES: JUNE 30, 2012
TERRENCE R. TOBEY, S.E.

JOB NO.	R371-01-11
DESIGNED	T.R.T.
DRAWN	B.C.E.
CONF.	
CHECKED	
DATE	OCT. 12, 2011

TS1.0

OF SHEETS

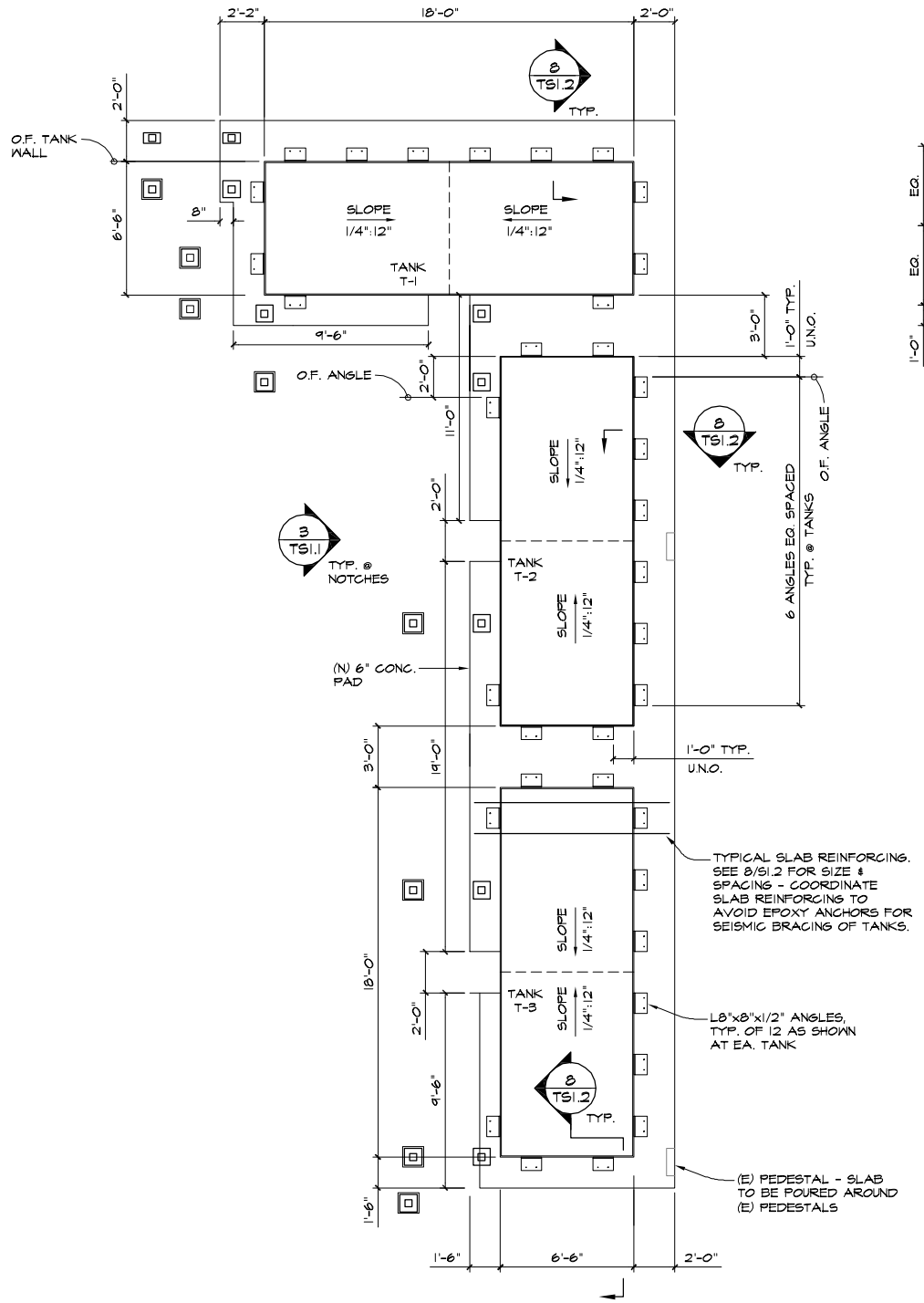

TANK NO. T-1, NO. T-2 AND NO. T-3 ANCHORAGE PLAN VIEW

1 TS1.1

SCALE: 1/4"=1'-0"

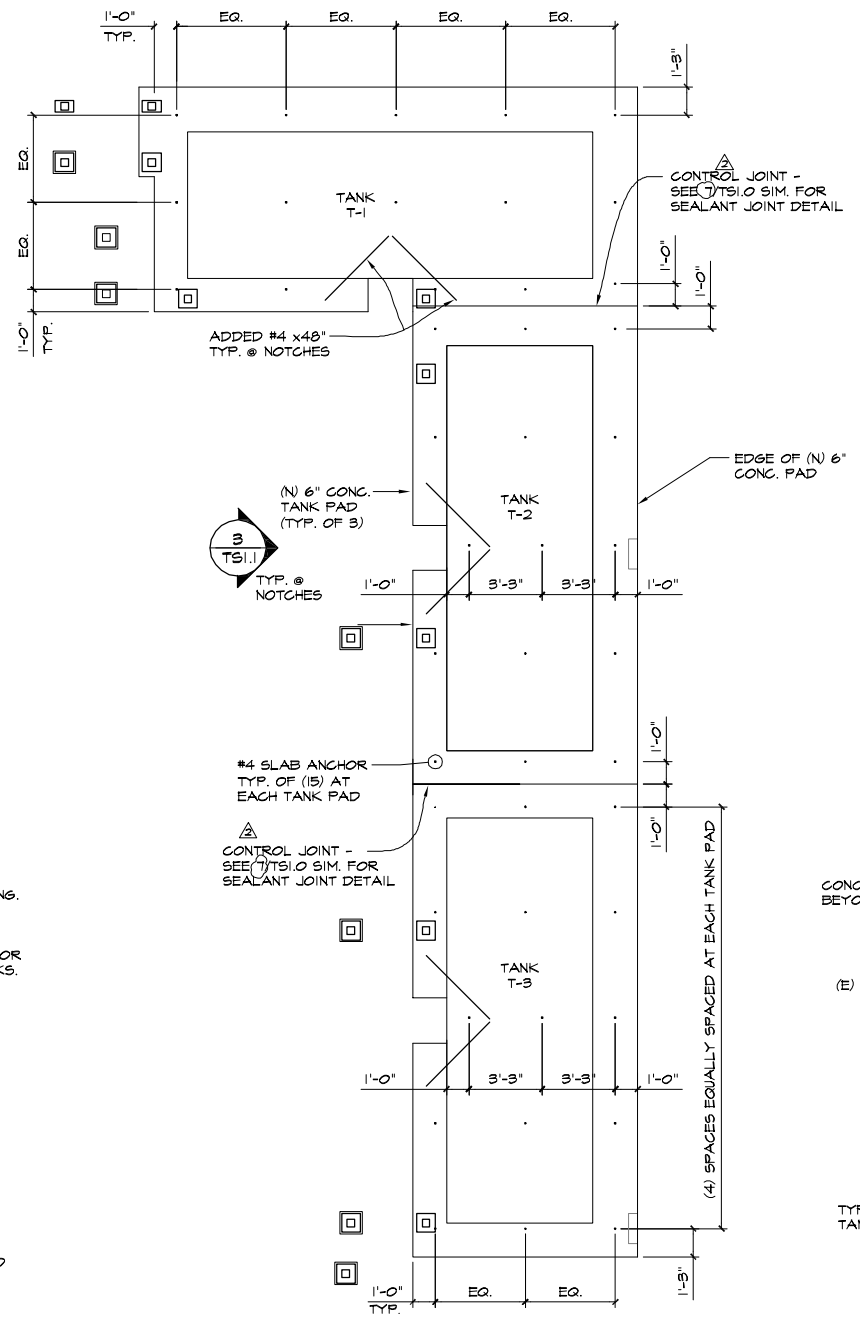

ANCHORAGE OF (N) CONC. PAD TO (E) CONC. SLAB

2 TS1.1

SCALE: 1/4"=1'-0"

NOTES: 1. SLAB ANCHOR LOCATIONS MAY BE ADJUSTED TO AVOID (E) REINFORCING. FILL ABANDONED HOLES W/ EPOXY.

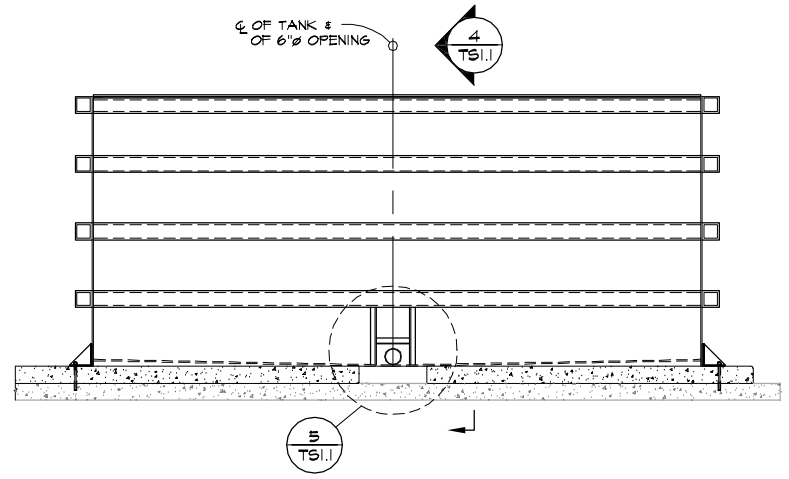

DRAINAGE HOLE DETAIL

3 TS1.1

SCALE: 3/8"=1'-0"

NOTES: 1. LIFTING TABS NOT SHOWN FOR CLARITY.

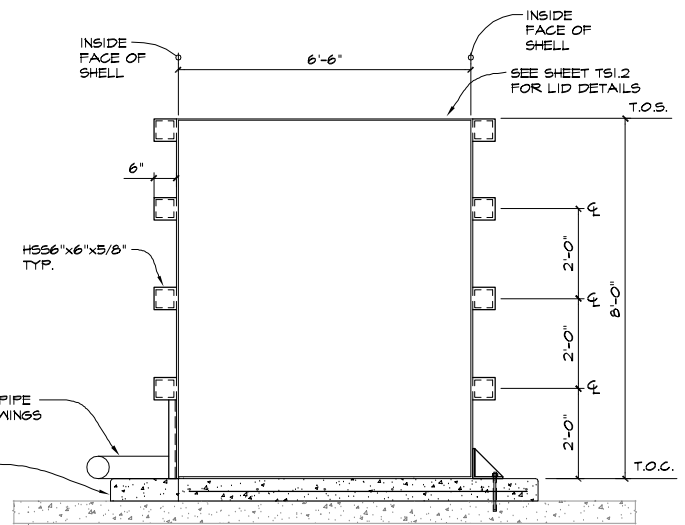

TANK ELEVATION

4 TS1.1

SCALE: 1/2"=1'-0"

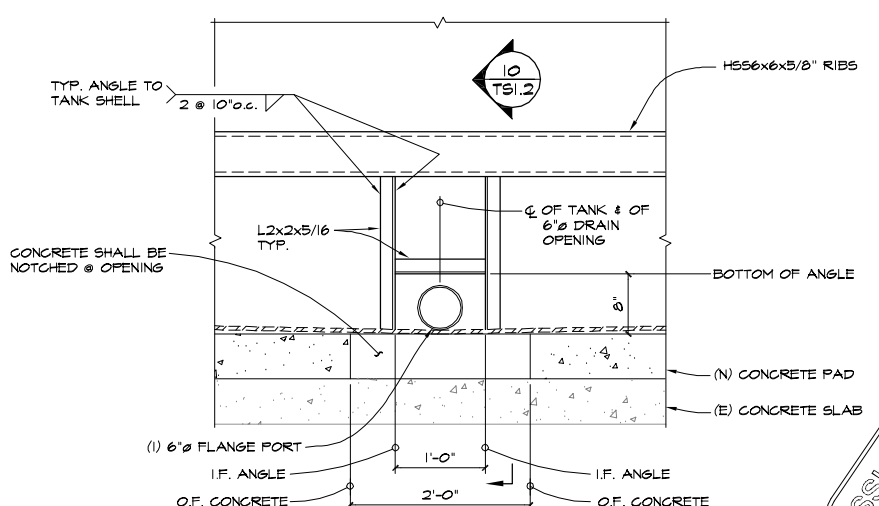

DRAINAGE HOLE DETAIL

5 TS1.1

SCALE: 1"=1'-0"

ISSUED FOR PERMIT

© TOBEY WADE CONSULTING
THIS DRAWING IS THE PROPERTY OF TOBEY WADE CONSULTING. USE OR REPRODUCTION OF THIS DRAWING, IN WHOLE OR IN PART, IS NOT THE WRITTEN PERMISSION OF TOBEY WADE CONSULTING IS STRICTLY PROHIBITED. THIS DRAWING IS NOT TO BE USED FOR ANY PROJECT OTHER THAN THE PROJECT FOR WHICH IT WAS PREPARED.

tobey wade
CONSULTING
329 Flint Street
Reno, Nevada 89501
Tel. (775) 324-7757 Fax (775) 324-7797

TANK NO.'s T-1 THRU T-3 ANCHORAGE PLAN, T1 THRU T-3, T-6 & T-7 DETAILS

PSC FERNLEY - TANK REPLACEMENT PROJECT

PREPARED FOR
AUSENCO PSI

LYON COUNTY NEVADA

FERNLEY

REVISIONS		
NO.	DESCRIPTION/DATE	BY
1	REVISED TANK T-1 - T-3 FLOOR PLATE & ANCHORAGE 8/2/12	TR
2	CONSTRUCTION CHANGES 9/7/12	JA

EXPIRES: JUNE 30, 2012

TERRENCE R. TOBEY, S.E.

JOB NO.	R371-01-11
DESIGNED	T.R.T.
DRAWN	B.C.E.
CONFR.	
CHECKED	
DATE	OCT. 12, 2011

TS1.1

OF SHEETS

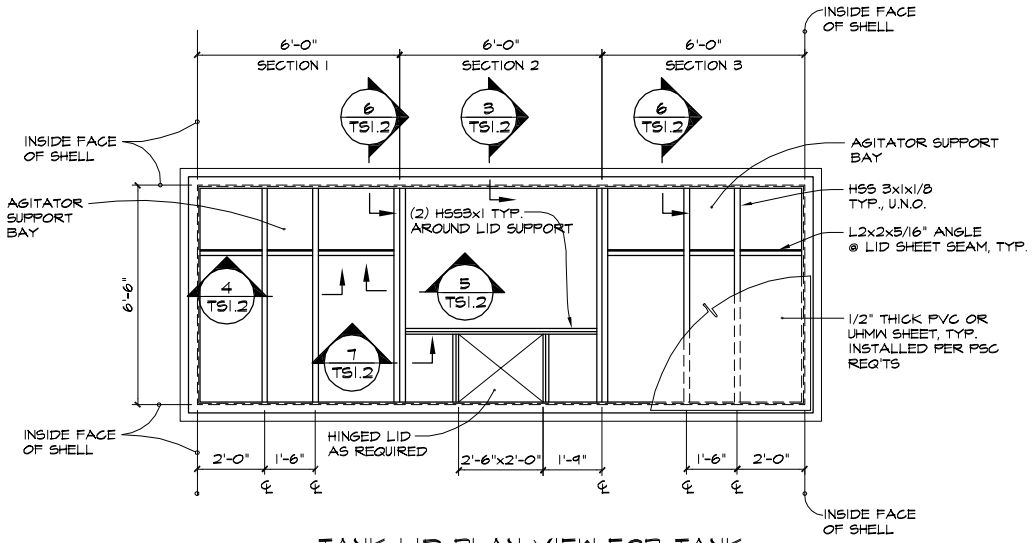

1 TS1.2 TANK LID PLAN VIEW FOR TANK NO. T-1, NO. T-2 & NO. T-3

SCALE: 3/8"=1'-0"

NOTES: 1. MOTOR WEIGHT SHALL NOT EXCEED 400 LBS.
2. THE LID FRAMING HAS BEEN DESIGNED FOR A LIVE LOAD = 20 psf.

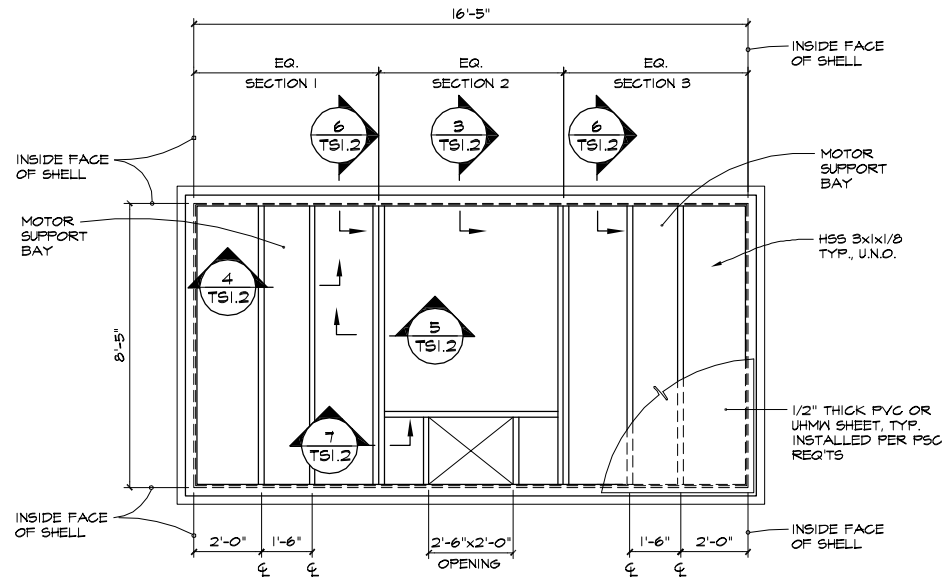

2 TS1.2 TANK LID PLAN VIEW FOR TANK NO. T-6 & NO. T-7

SCALE: 3/8"=1'-0"

NOTES: 1. MOTOR WEIGHT SHALL NOT EXCEED 400 LBS.
2. THE LID FRAMING HAS BEEN DESIGNED FOR A LIVE LOAD = 20 psf.

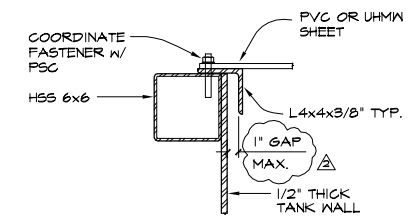

3 TS1.2 TYPICAL SECTION AT EDGE

SCALE: 1 1/2"=1'-0"

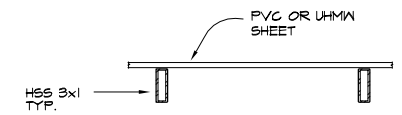

4 TS1.2 SECTION AT MOTOR SUPPORT

SCALE: 1 1/2"=1'-0"

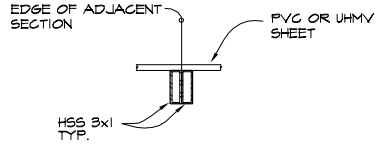

5 TS1.2 INTERIOR EDGE SUPPORT

SCALE: 1 1/2"=1'-0"

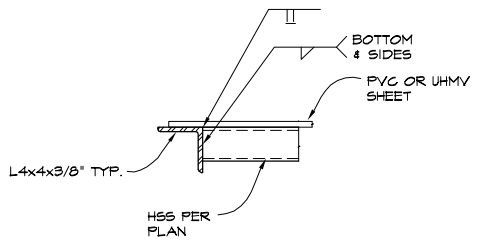

6 TS1.2 BEAM TO ANGLE CONNECTION

SCALE: 1 1/2"=1'-0"

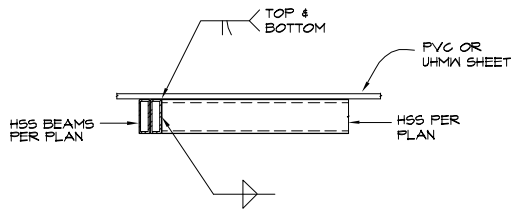

7 TS1.2 BEAM TO BEAM CONNECTION

SCALE: 1 1/2"=1'-0"

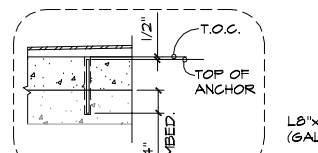

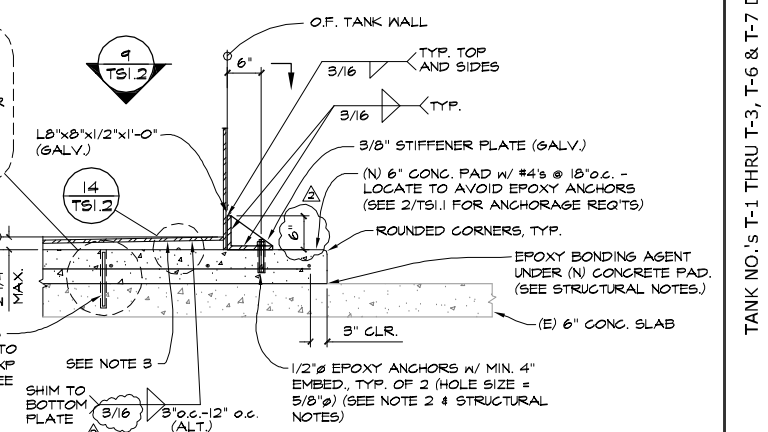

8 TS1.2 ANCHORAGE DETAIL

SCALE: 3/4"=1'-0"

NOTES: 1. SLAB ANCHORS SHALL HAVE PERIODIC INSPECTION.
2. EPOXY ANCHORS SHALL HAVE CONTINUOUS INSPECTION.
3. 1/2" PLATE SHIMS @ ±12"o.c.

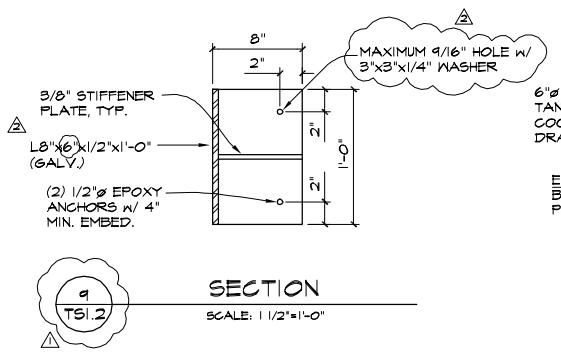

9 TS1.2 SECTION

SCALE: 1 1/2"=1'-0"

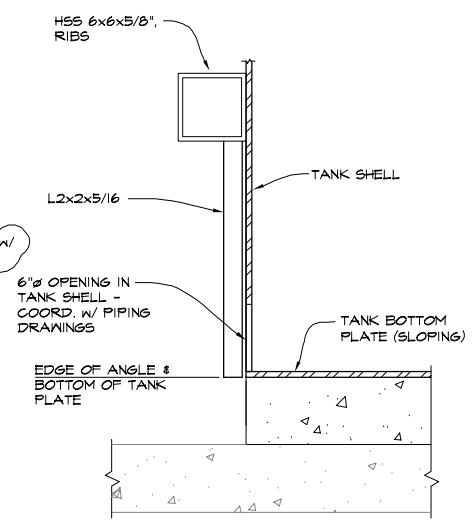

10 TS1.2 DRAINAGE HOLE DETAIL

SCALE: 1 1/2"=1'-0"

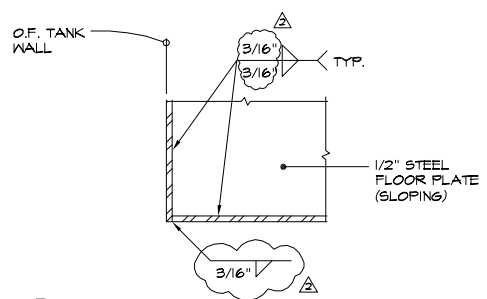

11 TS1.2 FLOOR PLATE DETAIL

SCALE: 1 1/2"=1'-0"

NOTE: 1. ANCHORAGE ANGLE NOT SHOWN FOR CLARITY.

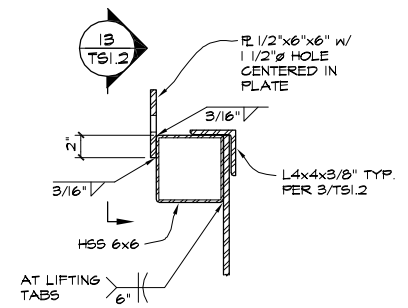

12 TS1.2 LIFTING TAB DETAIL

SCALE: 1 1/2"=1'-0"

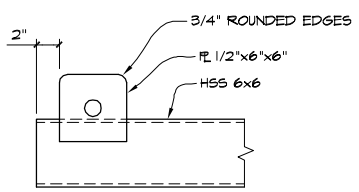

13 TS1.2 LIFTING TAB DETAIL

SCALE: 1 1/2"=1'-0"

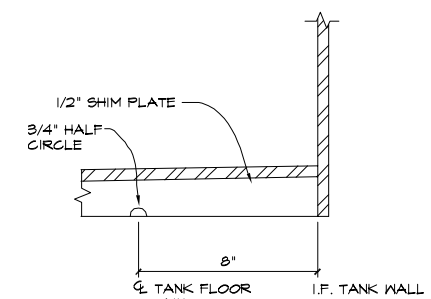

14 TS1.2 FLOOR PLATE DETAIL

SCALE: 3"=1'-0"

NOTE: 1. ANCHORAGE ANGLE NOT SHOWN FOR CLARITY.

ISSUED FOR PERMIT

© TOBEY WADE CONSULTING, INC.
THIS DRAWING IS THE PROPERTY OF TOBEY WADE CONSULTING, USE OR REPRODUCTION OF THIS DRAWING, IN WHOLE OR IN PART, WITHOUT THE WRITTEN PERMISSION OF TOBEY WADE CONSULTING IS STRICTLY PROHIBITED. THIS DRAWING IS NOT TO BE USED FOR ANY PROJECT OTHER THAN THE PROJECT FOR WHICH IT HAS PREVIOUSLY

tobey wade
CONSULTING
329 Flint Street
Reno, Nevada 89501
Tel. (775) 324-7757 Fax (775) 324-7797

TANK NO.'s T-1 THRU T-3, T-6 & T-7 DETAILS

PSC FERNLEY - TANK REPLACEMENT PROJECT

PREPARED FOR
AUSENCO PSI

LYON COUNTY NEVADA

FERNLEY

REVISIONS		
NO.	DESCRIPTION/DATE	BY
1	REVISED TANK T-1 - T-3 FLOOR PLATE & ANCHORAGE 5/21/12	T.R.T.
2	CONSTRUCTION CHANGES 9/7/12	J.K.

EXPIRES: JUNE 30, 2012
TERRENCE R. TOBEY, S.E.

JOB NO.	R371-01-11
DESIGNED	T.R.T.
DRAWN	B.C.J.E.
CONF.	
CHECKED	
DATE	OCT. 12, 2011

TS1.2

OF SHEETS

TANK DATA SHEET

RCRA-Regulated? **YES**
Tank Location: **DETOX ROOM**
Tank Name: **TREATMENT TANK**
Tank Numbers: **T - 1, T - 2, T - 3**
Process Description: **WASTE NEUTRALIZATION, TREATMENT**
Vessel Fluid: **AQUEOUS-BASED WASTE LIQUIDS**
Specific Gravity: **≤ 1.50** Freeboard At Working Vol (ft^3): **1' – 0"**
Normal Operating Pressure (psig): **ATMOSPHERIC** Temperature (°F): **AMBIENT**

	Material	Thickness	Type
Bottom	CARBON STEEL PLATE	5/16" NOMINAL	FLAT
Shell	CARBON STEEL PLATE	5/16" NOMINAL	STRAIGHT
Roof	CARBON STEEL PLATE	¼" NOMINAL	FLAT, BOLTED

Working Volume (USG): **6,125 GALLONS** Insulation: **NONE**
Nominal Volume (USG): **7,000 GALLONS** Method of Construction: **WELDED STEEL**
Tank I.D. (ft): **6'-6" x 18'-0"** Tank Height or Length (ft): **8' – 0"**
Design Code Used: **2006 IBC** Date in Service: **PLANNED Tanks**
Anchorage: **BOLTED TO CONCRETE. Anchorage designs per 2006 IBC.**

Connections

Item No.	Size (In.)	Gasket	Description
1	24"		ROOF MANWAY
2	4"		SIDE FLANGE NOZZLE
3	3"		FILL NOZZLE
4	8"		MIXER NOZZLE
5	4"		VENT FLANGE NOZZLE
6	4"		FLANGE ROOF NOZZLE
7	3"		FLANGE ROOF NOZZLE
8	2"		LEVEL SENSOR CONN.
9	1 ½"		FLANGE NOZZLES (3)
10			
11			
12			
13			
14			
15			

Tank Sketch

Interior Coating: **POLYSPEC VINYL ESTER NOVOLAC SYSTEM.**
Exterior Coating: **BASECOAT EPOXY, TOPCOAT POLYURETHANE ENAMEL.**
Tank Mfger: **to be determined.**

Remarks: **Planned tanks for replacement of existing tanks T-1, T-2, and T-3.**

ADDITION DATE 10/09/09
REVISION NUMBER 1

SCHIFF ASSOCIATES

gbell@schiffassociates.com

www.schiffassociates.com
Consulting Corrosion Engineers – Since 1959

October 6, 2009 via email to: Burgess, Aubry [ABurgess@pscnow.com]

PSC ENVIRONMENTAL SERVICES
2095 Newlands Drive E
Fernley, NV 89408

Attention: Mr. Aubry Burgess
Maintenance Supervisor

Re: **Compatibility Certification for Planned Replacement Tank T-2**
for Treatment of Waste Corrosives
Amended Tank Replacement Plan
Fernely, NV
SA#08-1334LGL

Dear Mr. Burgess:

We review information relating to the planned replacement for Tank T-2. The planned replacement will be a coated and lined steel tank. The tank may or may not have a steel top and our recommendations include both alternatives.

Based on this information we have been provided about the historic and planned waste streams, we have determined that the internal surfaces of the planned replacement steel tank should be lined with PermaRez 333, a 120 mil heavy-duty lining system for steel substrates, combines vinyl ester novolac resin, inert mineral fillers and fiberglass or synthetic reinforcement to produce a dimensionally stable liner suited for immersion and splash/spillage exposure of concentrated acids and aggressive solvents. The compatible PolySpec 310 (primer) and PolySpec731 (non-sag gel) should be used for building a smooth cove in the transition between floor, shell and any transitions or corners. The cove will take the strain of a "hard angle" transition out of the coating system during the flex period created when head pressures and temperatures cause the steel to move. Product datasheets and specifications for the PermaRez 333 system and its components are attached.

If the tank has an open top, then the exterior of the tank should be encapsulated/coated with the same material as the lining (PermaRez 333). If a fixed roof is used, then the exterior coating systems should be a Sherwin Williams Macropoxy 646 with a Urethane top coat of Poly Lon HP also by Sherwin Williams. Exterior Film Thickness should be 4 to 6 mils DFT each of Macropoxy 646 (two coats) and 2 to 4 mils each Poly Lon HP (1

1489 W. Warm Springs Road #110 · Henderson, NV 89014
Phone: 702.966.8266 · Fax: 702.946.6767

ADDITION DATE 10/09/09

REVISION NUMBER 1

coat) with a target total exterior dry film thickness of 10 mils. Product data sheets for these exterior coatings for fixed roof tanks are attached.

As with all high-performance lining and coating systems, quality assurance and control during application is critical to service performance. We recommend full-time third-party inspection by Level III certified NACE International Coating inspectors.

I certify that based on the information provided to me that the above recommended liner system is suitable for the waste processing stream of the PSC Facility as configured and intended per the Amended Tank Replacement Program outlined in the letter from Thomas Nelson of PSC to Nevada Division of Environmental Protection dated March 25, 2008.

CERTIFICATION

I certify under penalty of law that this document and all attachments were prepared under my direction or supervision according to a system designed to assure that qualified personnel properly gather and evaluate the information submitted. Based on my inquiry of the person or persons who manage the system, or those persons directly for gathering the information, the information submitted is, to the best of my knowledge and belief, true, accurate, and complete. I am aware that there are significant penalties for submitting false information, including the possibility of fine and imprisonment for knowing violations.

CLOSURE

Our services have been performed with the usual thoroughness and competence of the engineering profession. No other warranty or representation, either expressed or implied, is included or intended.

Sincerely,
SCHIFF ASSOCIATES

GRAHAM E.C. BELL
EXP. 12-31-10
MECHANICAL

Graham E.C. Bell, PE
Principal Engineer
NACE International Corrosion Specialist #5350

Attachments: PermaRez 33, FlakeRex 304, PolySpec 310, PolySpec 731 Tech Data Sheets
General Specification for Lining Steel Tanks with PermaRez
Macropoxy 646, Polylon HP Ployurethane Tech Data Sheets and MSDS

PermaRez® 333

TECHNICAL DATA SHEET

Reinforced Lining for Concrete & Steel, Acid & Solvent Resistant

DESCRIPTION

PermaRez 333, a 120 mil heavy-duty lining system for concrete and steel substrates, combines vinyl ester novolac resin, inert mineral fillers and fiberglass or synthetic reinforcement to produce a dimensionally stable liner ideally suited for immersion and splash/spillage exposure of concentrated acids and aggressive solvents.

TYPICAL APPLICATION

• Primer	PolySpec 310 (steel) / 320 (concrete) @ 2–3 mils DFT
• Detail Preparation	PolySpec 731
• Basecoat	PermaRez 333 w/F-4 Powder @ 50–60 mils
• Fabric	Type W (10 oz. woven-roving)
• Saturant	PermaRez 333 @ 25 mils
• Topcoat	PermaRez 333 w/F-4 Powder @ 50–60 mils PolySpec Smoothing Liquid #1
• Options	Carbon-Filled, Non-Silica Applications (recommended for fluoride or caustic service) – Powder: F-5 Powder – Fabric: Type V (Nexus Veil)

PERFORMANCE DATA

Compressive Strength (ASTM C-579)	12,000 psi
Tensile Strength (ASTM C-307)	3,000 psi
Flexural Strength (ASTM C-580)	12,500 psi
Hardness, Shore D (ASTM D-2240)	85–90
Bond Strength (ASTM D-4541)	425 psi
Abrasion Resistance (ASTM D-4060)	100 mg
Operating Temperature, maximum ...Dry:	350–400°F
...Wet:	Dependant on chemical exposure
VOC	1.58 lb/gal; 190 gm/L

STORAGE & INSTALLATION

Storage Environment	Dry area, 65–80°F
Application Temperature, ambient	50–95°F
Application Temperature, substrate	Minimum 5°F above dew point
Shelf Life, PROVIDED STORAGE ENVIRONMENT GUIDELINES ARE FOLLOWED	60 days
Pot Life, @ 77°F	35 minutes
Full Service, @ 77°F	7 days

Material cures more slowly at cooler temperatures, and working time will be substantially reduced at higher temperatures. In hot weather, material should be cooled to 65°F to 80°F prior to mixing and application to improve workability and avoid shortened pot life. The data shown above reflects typical results based on laboratory testing under controlled conditions. Reasonable variations from the data shown above may result.

CONSIDERATIONS & LIMITATIONS

1. For best results, work area should be humidity and temperature controlled.
2. Work area must be well ventilated. Fresh air fed respirators are recommended when working with this product.
3. Do not thin with solvents unless advised to do so by PolySpec.
4. Confirm product performance in specific chemical environment prior to use.
5. Prepare substrate according to "Surface Preparation" portion of this document.
6. Do not apply to slabs on grade unless a heavy unruptured vapor barrier has been installed under the slab.
7. Always use protective clothing, gloves and goggles consistent with OSHA regulations during use. Avoid eye and skin contact. Do not ingest or inhale. Refer to Material Safety Data Sheet for detailed safety precautions.
8. For industrial/commercial use. Installation by trained personnel only.

BENEFITS

- *Excellent resistance to aggressive acids, alkalies and solvents; withstands attack from 75% sulfuric acid, 37% hydrochloric acid and 100% phosphoric acid*
- *Seamless, high tensile strength composite*
- *Extremely low permeation rate; superior performance to acid-proof brick*
- *Excellent dimensional stability; withstands wide temperature range*
- *Temperature resistant: Wet 220°F / Dry 400°F*
- *Superior compatibility with concrete and steel when compared with conventional coatings*

RECOMMENDED USES

- *Steel process and storage tanks*
- *Concrete waste treatment sumps*
- *Trenches, pedestals, curbs*
- *Secondary containment*
- *Truck loading/unloading areas*
- *Chemical pump pads*

GENERIC DESCRIPTION

Vinyl Ester Novolac

STANDARD COLORS

Gray
(Amber liquid, before addition of Powder)

PACKAGING

5-Gallon Unit

Filler Powder sold separately; per 5-Gallon Unit:
- *125 pounds F-4 Powder, sold in 50 lb bags*
- *30 pounds F-5 Powder, sold in 30 lb pails*

Fabric sold separately:
- *Type W (10 oz cloth) sold in 2,231 ft² rolls*
- *Type V (Nexus Veil) sold in 6,000 ft² rolls*

PolySpec 731 and PolySpec Smoothing Liquid #1 sold separately

COVERAGE

15 ft² / gallon @ 120 mils
(Includes two 60 mil coats and saturant)

SEE SYSTEM DETAILS IN "TYPICAL INSTALLATION" PORTION OF THIS DOCUMENT

SURFACE PREPARATION

Concrete: Apply only to clean, dry and sound concrete substrates that are free of all coatings, sealers, curing compounds, oils, greases or any other contaminants.

- *New concrete should be cured a minimum of 28 days.*
- *Concrete that has been contaminated with chemicals or other foreign matter must be neutralized or removed.*
- *Remove any laitance or weak surface layers.*
- *Concrete should have a minimum surface tensile strength of at least 300 PSI per ASTM D-4541.*
- *Surface profile shall be CSP-3 to CSP-5 meeting ICRI (International Concrete Repair Institute) standard guideline #03732 for coating concrete, producing a profile equal to 60-grit sandpaper or coarser. Prepare surface by mechanical means to achieve this desired profile.*
- *Moisture vapor transmission should be 3 pounds or less per 1,000 square feet over a 24 hour time period, as confirmed through a calcium chloride test, as per ASTM E-1907. Quantitative relative humidity (RH) testing, ASTM F-2170, should confirm concrete RH results <75%.*
- *All surface irregularities, cracks, expansion joints and control joints should be properly addressed prior to application.*
- *Outgassing may occur due to the porosity of some concrete surfaces. To reduce the effect of outgassing, the primer and coating should be applied when the temperature of the concrete substrate is dropping. This usually occurs in the evening; however, the concrete substrate temperature should be measured with a surface thermometer for verification. Double priming will greatly reduce the effects of outgassing by additionally filling the pores in the concrete.*

Steel: For immersion service, "White Metal" abrasive blast with an anchor profile of 2–4 mils in accordance with Steel Structures Painting Council Specification SP-5-63 or NACE No. 1 is required. For splash and spillage exposure, "Near White" SP-10-63 or NACE No. 2 is required.

Refer to PolySpec Surface Preparation Guidelines for more details.

INSTALLATION STEPS

1. Prime surface with PolySpec 310 (steel) or PolySpec 320 (concrete) Primer. See data sheet for application details.
2. Use PolySpec 731 to round the corner radius of vertical to horizontal transitions, to smooth weld seams, and to patch holes and irregularities. See data sheet for application details.
3. Pour Hardener #3 into PermaRez 333 Resin pail. Mix thoroughly using a jiffy-type mixer operated at low speed until a proper blend is attained. Scrape the sides of the pail to ensure the product has been properly mixed; any unmixed material left on the side of the pail will not cure.

   NOTE: Mix ratio is 2.5 ounces Hardener #3 to one gallon PermaRez 333 Resin.
4. Stir in F-4 or F-5 filler powder and mix well until all particles are wetted out.

   NOTE: Mix ratio is approximately 25 pounds F-4 (or 6 pounds F-5) filler per mixed gallon of binder.
5. Spread basecoat mixture onto surface by trowel to a thickness of 1/16". Immediately lay the reinforcement fabric into the basecoat and press out all air pockets with a dry paint roller.
6. Saturate the reinforcement with a coat of catalyzed PermaRez 333 Resin (without powder). Roll out saturant coat until the whiteness of the reinforcement disappears.
7. After the saturated basecoat has dried, grind down any burrs that have appeared on the surface.
8. Spread topcoat mixture (PermaRez 333 with filler powder) with a steel trowel as evenly as possible to a thickness of 1/16".

   NOTE: Recoat time over saturant coat is normally 24 hours.
9. Before topcoat is allowed to dry, smooth with a paint brush dipped lightly in PolySpec Smoothing Liquid #1.
10. For best results, clean tools and equipment with PolySpec® All Purpose Cleaner, a nonflammable and non-evaporating cleaner. Always wear gloves when using this product.

1 gal R: 2.5 oz H / DOC PR333-TDS Rev 04/08

PermaRez and PolySpec are ® Registered Trademarks of PolySpec L.P.

© Copyright 2005 PolySpec L.P. All rights reserved. Published technical data and instructions are subject to change without notice. Please visit the online catalog at www.polyspec.com for the most current technical data and instructions. Or, you may contact your PolySpec representative for current technical data and instructions.

PolySpec, L.P. warrants its products to be free from defects in material and workmanship. PolySpec's sole obligation and Buyer's exclusive remedy in connection with the products shall be limited, at PolySpec's option, to either replacement of products not conforming to this warranty or credit to Buyer's account in the invoiced amount of the nonconforming products. Any claim under this Warranty must be made by Buyer to PolySpec in writing within five days of Buyer's discovery of the claimed defect, but in no event later than the expiration of the applicable shelf life, or one year from the delivery date, whichever is earlier. Buyer's failure to notify PolySpec of such nonconformance as required herein shall bar Buyer from recovery under this warranty.

PolySpec makes no other warranties concerning this product. No other warranties, either expressed or implied, or statutory, such as warranties of merchantability or fitness for a particular purpose, shall apply. In no event shall PolySpec be liable for consequential or incidental damages.

Any recommendation or suggestion relating to the use of the products made by PolySpec, whether in its technical literature, or in response to specific inquiry, or otherwise, is based on data believed to be reliable; however, the products and information are intended for use by Buyers having requisite skill and know-how in the industry, and therefore it is for the Buyer to satisfy itself of the suitability of the products for its own particular use, and it shall be deemed that Buyer has done so, at its sole discretion and risk. Variation in environment changes in procedures of use, or extrapolation of data may cause unsatisfactory results. PolySpec cannot guarantee that color will conform to sample, if provided.

FlakeRez® 304

TECHNICAL DATA SHEET

Concrete & Steel Coating, Graphite Flake-Filled, Fluoride Resistant

DESCRIPTION

FlakeRez 304, a two component, graphite flake-filled vinyl ester novolac resin coating for primary and secondary containment, resists higher concentrations of acids and solvents where most other coatings fail. FlakeRez coatings contain inert flake reinforcement for dependability in maintaining their overlapping structure. The flakes within the chemical resistant resin matrix provide an extremely low permeation rate, which greatly reduces passage of ions through the coating.

TYPICAL APPLICATION

• Primer	PolySpec 310 (steel) / 320 (concrete) @ 2–3 mils DFT
• Detail Preparation	PolySpec 731
• Basecoat	FlakeRez 304 @ 15–20 mils DFT
• Topcoat	FlakeRez 304 @ 15–20 mils DFT

PERFORMANCE DATA

Tensile Strength (ASTM C-307)	3,500 psi
Flexural Strength (ASTM C-580)	8,500 psi
Hardness, Barcol (ASTM D-2583)	35–40
Abrasion Resistance (ASTM D-4060)	25 mg
Moisture Permeability, perm. in. (ASTM E-96)	0.002
Operating Temperature, maximum . Dry:	300–350°F
Wet:	Dependant on chemical exposure
VOC	1.23 lb/gal; 148 gm/L

STORAGE & INSTALLATION

Storage Environment	Dry enclosed area, 65–80°F
Application Temperature, ambient	50–95°F
Application Temperature, substrate	Minimum 5°F above dew point
Shelf Life, PROVIDED STORAGE ENVIRONMENT GUIDELINES ARE FOLLOWED	60 days
Pot Life, @ 77°F	30 minutes
Full Service, @ 77°F	3–5 days

Material cures more slowly at cooler temperatures, and working time will be substantially reduced at higher temperatures. In hot weather, material should be cooled to 65°F to 80°F prior to mixing and application to improve workability and avoid shortened pot life. The data shown above reflects typical results based on laboratory testing under controlled conditions. Reasonable variations from the data shown above may result.

CONSIDERATIONS & LIMITATIONS

1. For best results, work area should be humidity and temperature controlled.
2. Work area must be well ventilated. Fresh air fed respirators are recommended when working with this product.
3. Do not thin with solvents unless advised to do so by PolySpec.
4. Confirm product performance in specific chemical environment prior to use.
5. Prepare substrate according to "Surface Preparation" portion of this document.
6. Do not apply to slabs on grade unless a heavy unruptured vapor barrier has been installed under the slab.
7. Always use protective clothing, gloves and goggles consistent with OSHA regulations during use. Avoid eye and skin contact. Do not ingest or inhale. Refer to Material Safety Data Sheet for detailed safety precautions.
8. For industrial/commercial use. Installation by trained personnel only.

BENEFITS

- *Excellent resistance to fluorides such as hydrofluoric and hydrofluosilicic acids*
- *Seamless, jointless barrier coating*
- *Long-term reliability due to extremely low permeation rate of overlapping flake technology*
- *Easy application in two 20-mil coats*
- *No baking required*
- *Withstands high operating temperatures*

RECOMMENDED USES

- *Tank interior lining*
- *Process vessels*
- *Process floors*
- *Tank and effluent sump dikes*

GENERIC DESCRIPTION

Graphite Flake-Filled Vinyl Ester Novolac

STANDARD COLORS

Charcoal Gray

PACKAGING

4.5-Gallon Unit

COVERAGE

25–30 ft^2 / gallon @ 35–40 mils DFT

(INCLUDES 2 COATS @ 15–20 MILS DFT EACH)

6614 GANT ROAD • HOUSTON, TEXAS 77066 • TEL: 281-397-6033 • FAX: 281-397-6512
www.polyspec.com

PolySpec®

SURFACE PREPARATION

Concrete: Apply only to clean, dry and sound concrete substrates that are free of all coatings, sealers, curing compounds, oils, greases or any other contaminants.

- *New concrete should be cured a minimum of 28 days.*
- *Concrete that has been contaminated with chemicals or other foreign matter must be neutralized or removed.*
- *Remove any laitance or weak surface layers.*
- *Concrete should have a minimum surface tensile strength of at least 300 PSI per ASTM D-4541.*
- *Surface profile shall be CSP-3 to CSP-5 meeting ICRI (International Concrete Repair Institute) standard guideline #03732 for coating concrete, producing a profile equal to 60-grit sandpaper or coarser. Prepare surface by mechanical means to achieve this desired profile.*
- *Moisture vapor transmission should be 3 pounds or less per 1,000 square feet over a 24 hour time period, as confirmed through a calcium chloride test, as per ASTM E-1907. Quantitative relative humidity (RH) testing, ASTM F-2170, should confirm concrete RH results <75%.*
- *All surface irregularities, cracks, expansion joints and control joints should be properly addressed prior to application.*
- *Outgassing may occur due to the porosity of some concrete surfaces. To reduce the effect of outgassing, the primer and coating should be applied when the temperature of the concrete substrate is dropping. This usually occurs in the evening; however, the concrete substrate temperature should be measured with a surface thermometer for verification. Double priming will greatly reduce the effects of outgassing by additionally filling the pores in the concrete.*

Steel: For immersion service, "White Metal" abrasive blast with an anchor profile of 2–4 mils in accordance with Steel Structures Painting Council Specification SP-5-63 or NACE No. 1 is required. For splash and spillage exposure, "Near White" SP-10-63 or NACE No. 2 is required.

Refer to PolySpec Surface Preparation Guidelines for more details.

INSTALLATION STEPS

1. Prime surface with PolySpec 310 (steel) or PolySpec 320 (concrete) Primer. See data sheet for application details.

   NOTE: For enclosed steel structures, if dehumidification equipment is utilized, the coating may be applied directly to the prepared substrate without the use of primer.

2. Use PolySpec 731 to round the corner radius of vertical to horizontal transitions, to smooth weld seams, and to patch holes and irregularities. See data sheet for application details.

3. Weld seams should be ground smooth prior to coating application. It may be necessary to apply a precoat of FlakeRez 304 to all seam areas.

4. Catalyze FlakeRez 304 by adding 3 ounces of Hardener #1 per gallon to the resin and mixing well with a mechanical mixer operated at low speed.

5. Apply first coating at 15–20 dry mils:

   a. **Spray Application: Conventional or Airless Spray**

   Detail all edges prior to spray application.

   When applying by spray, apply in a criss-cross pattern, taking care to avoid excessive build-up of coating.

   b. **Brush or Roller Application**

   Brush or roll onto substrate.

6. Allow product to cure for 2–4 hours @ 75°F. Apply second coat.

   NOTE: Add 3oz. wax solution per gallon to the topcoat to minimize surface tack.

   NOTE: Maximum recoat window is 48 hours.

   NOTE: Two 15–20 dry mil coats are adequate for most jobs.

   NOTE: If coating is allowed to cure for over 12 hours prior to recoating, check bond by rubbing surface with PolySpec® Smoothing Liquid #1. If coating becomes slightly tacky, then surface is ready for second coat. If surface is unaffected, sand lightly before recoating.

7. After coating is completed, allow 3–5 days for curing. Random sample checks using a Barcol Hardness gauge should indicate a minimum reading of 30.

8. Before placing into service, pinhole test the entire surface using 2,500 to 3,000 volts. All pinhole areas should be recoated and retested.

9. For best results, clean tools and equipment with PolySpec® All Purpose Cleaner, a nonflammable and non-evaporating cleaner. Always wear gloves when using this product.

1 GAL R: 3 OZ H / DOC FR304-TDS

FlakeRez and PolySpec are ® Registered Trademarks of PolySpec L.P. Rev 06/07

© Copyright 2005 PolySpec L.P. All rights reserved. Published technical data and instructions are subject to change without notice. Please visit the online catalog at www.polyspec.com for the most current technical data and instructions. Or, you may contact your PolySpec representative for current technical data and instructions.

PolySpec, L.P. warrants its products to be free from defects in material and workmanship. PolySpec's sole obligation and Buyer's exclusive remedy in connection with the products shall be limited, at PolySpec's option, to either replacement of products not conforming to this warranty or credit to Buyer's account in the invoiced amount of the nonconforming products. Any claim under this Warranty must be made by Buyer to PolySpec in writing within five days of Buyer's discovery of the claimed defect, but in no event later than the expiration of the applicable shelf life, or one year from the delivery date, whichever is earlier. Buyer's failure to notify PolySpec of such nonconformance as required herein shall bar Buyer from recovery under this warranty.

PolySpec makes no other warranties concerning this product. No other warranties, either expressed or implied, or statutory, such as warranties of merchantability or fitness for a particular purpose, shall apply. In no event shall PolySpec be liable for consequential or incidental damages.

Any recommendation or suggestion relating to the use of the products made by PolySpec, whether in its technical literature, or in response to specific inquiry, or otherwise, is based on data believed to be reliable; however, the products and information are intended for use by Buyers having requisite skill and know-how in the industry, and therefore it is for the Buyer to satisfy itself of the suitability of the products for its own particular use, and it shall be deemed that Buyer has done so, at its sole discretion and risk. Variation in environment, changes in procedures of use, or extrapolation of data may cause unsatisfactory results. PolySpec cannot guarantee that color will conform to sample, if provided.

PolySpec® 310

TECHNICAL DATA SHEET

Primer for Vinyl Esters & Polyesters on Steel

DESCRIPTION

PolySpec 310 primer is used on blasted steel surfaces prior to application of FlakeRez and PermaRez coatings and lining systems.

TYPICAL APPLICATION

• Primer	PolySpec 310 @ 250–350 ft²/gallon
• Overcoat	Flooring or Lining System from PolySpec

PERFORMANCE DATA

Tensile Strength (ASTM D-412) ..... 10,000 psi
Elongation (ASTM D-638) 10–12%
Hardness, Barcol 30

STORAGE & INSTALLATION

Storage Environment ..... Dry area, 65–80°F
Application Temperature, ambient ..... 50–95°F
Application Temperature, substrate .....Minimum 5°F above dew point
Shelf Life, PROVIDED STORAGE ENVIRONMENT GUIDELINES ARE FOLLOWED ..... 60 days
Pot Life, @ 77°F .....25 minutes
Minimum Recoat, @77°F ..... 6–8 hours

Material cures more slowly at cooler temperatures, and working time will be substantially reduced at higher temperatures. In hot weather, material should be cooled to 65°F to 80°F prior to mixing and application to improve workability and avoid shortened pot life. The data shown above reflects typical results based on laboratory testing under controlled conditions. Reasonable variations from the data shown above may result.

CONSIDERATIONS & LIMITATIONS

1. Apply PolySpec 310 within eight (8) hours of the blasting operation to protect the blasted surface from rusting.
2. For best results, this product should be applied in a humidity and temperature-controlled environment.
3. Do not thin with solvents unless advised to do so by PolySpec.
4. Confirm product performance in specific chemical environment prior to use.
5. Prepare substrate according to "Surface Preparation" portion of this document.
6. Always use protective clothing, gloves and goggles consistent with OSHA regulations during use. Avoid eye and skin contact. Do not ingest or inhale. Refer to Material Safety Data Sheet for detailed safety precautions.
7. For industrial/commercial use. Installation by trained personnel only.

BENEFITS

- *Provides flexible transition between steel substrate and lining system*
  - *Excellent surface adhesion to steel substrate*
  - *Excellent bond to subsequent lining systems*
- *Protects blasted steel surface from rust*
- *Contains no lead pigment*

RECOMMENDED USES

- *Used in conjunction with FlakeRez® and PermaRez® polyester or vinyl ester coatings & lining systems for steel*

GENERIC DESCRIPTION

Primer

STANDARD COLORS

Amber

PACKAGING

1-Gallon Unit

5-Gallon Unit

COVERAGE

250–300 ft² / gallon @ 1–3 mils DFT

6614 GANT ROAD • HOUSTON, TEXAS 77066 • TEL: 281 397 6035 • FAX: 281 397 6512
www.polyspec.com

PolySpec®

SURFACE PREPARATION

Steel: For immersion service, "White Metal" abrasive blast with an anchor profile of 2–4 mils in accordance with Steel Structures Painting Council Specification SP-5-63 or NACE No. I is required. For splash and spillage exposure, "Near White" SP-10-63 or NACE No. 2 is required.

Refer to PolySpec Surface Preparation Guidelines for more details.

INSTALLATION STEPS

NOTE: For best results, this product should be applied in a humidity and temperature-controlled environment.

NOTE: Apply PolySpec 310 within eight (8) hours of the blasting operation to protect the blasted surface from rusting.

1. Add 2 ounces of Hardener #I per gallon of resin. Mix thoroughly using a mechanical jiffy-type mixer operated at low speed.
2. Apply by roller or spray.
3. After the prime coat is dry to the touch (usually 6–8 hours at 77°F), proceed to installation of FlakeRez® or PermaRez® coating/lining system.

   NOTE: PolySpec 310 must be recoated within 72 hours. For longer waiting periods, wipe with styrene until surface becomes tacky. If surface remains hard, sandblasting is required.
4. For best results, clean tools and equipment with PolySpec® All Purpose Cleaner, a nonflammable and non-evaporating cleaner. Always wear gloves when using this product.

1galR : 2ozH / DOC PS310-TDS Rev 07/05

PolySpec, FlakeRez and PermaRez are ® Registered Trademarks of PolySpec L.P.

© Copyright 2005 PolySpec L.P. All rights reserved. Published technical data and instructions are subject to change without notice. Please visit the online catalog at www.polyspec.com for the most current technical data and instructions. Or, you may contact your PolySpec representative for current technical data and instructions.

PolySpec, L.P. warrants its products to be free from defects in material and workmanship. PolySpec's sole obligation and Buyer's exclusive remedy in connection with the products shall be limited, at PolySpec's option, to either replacement of products not conforming to this warranty or credit to Buyer's account in the invoiced amount of the nonconforming products. Any claim under this Warranty must be made by Buyer to PolySpec in writing within five days of Buyer's discovery of the claimed defect, but in no event later than the expiration of the applicable shelf life, or one year from the delivery date, whichever is earlier. Buyer's failure to notify PolySpec of such nonconformance as required herein shall bar Buyer from recovery under this warranty.

PolySpec makes no other warranties concerning this product. No other warranties, either expressed or implied, or statutory, such as warranties of merchantability or fitness for a particular purpose, shall apply. In no event shall PolySpec be liable for consequential or incidental damages.

Any recommendation or suggestion relating to the use of the products made by PolySpec, whether in its technical literature, or in response to specific inquiry, or otherwise, is based on data believed to be reliable; however, the products and information are intended for use by Buyers having requisite skill and know-how in the industry, and therefore it is for the Buyer to satisfy itself of the suitability of the products for its own particular use, and it shall be deemed that Buyer has done so, at its sole discretion and risk. Variation in environment changes in procedures of use, or extrapolation of data may cause unsatisfactory results. PolySpec cannot guarantee that color will conform to sample if provided.

PolySpec® 731

TECHNICAL DATA SHEET

Non-Sag Gel, for use with Vinyl Esters & Polyesters

DESCRIPTION

PolySpec 731 is a polyester putty material used with polyester and vinyl ester lining systems. It is used primarily to round the corner radius at vertical to horizontal transitions in steel and concrete prior to lining applications.

PERFORMANCE DATA

Tensile Strength (ASTM D-412)	1,800 psi
Bond Strength (ASTM D-4541)	300 psi
Viscosity	Heavy Paste
VOC	0.405 lb/gal; 296 gm/L

STORAGE & INSTALLATION

Storage Environment	Dry area, 65–80°F
Application Temperature, ambient	50–95°F
Application Temperature, substrate	Minimum 5°F above dew point
Shelf Life, PROVIDED STORAGE ENVIRONMENT GUIDELINES ARE FOLLOWED	60 days
Pot Life, @ 77°F	20–25 minutes
Set Time, @ 77°F	2–4 hours

Material cures more slowly at cooler temperatures, and working time will be substantially reduced at higher temperatures. In hot weather, material should be cooled to 65°F to 80°F prior to mixing and application to improve workability and avoid shortened pot life. The data shown above reflects typical results based on laboratory testing under controlled conditions. Reasonable variations from the data shown above may result.

CONSIDERATIONS & LIMITATIONS

1. Do not install in thicknesses greater than 1/2" in one application.
2. Unlike epoxies, PolySpec 731 does not build up heat until after the initial set has occurred, making his product well suited for use on horizontal and vertical surfaces.
3. Do not thin with solvents unless advised to do so by PolySpec.
4. Confirm product performance in specific chemical environment prior to use.
5. Prepare substrate according to "Surface Preparation" portion of this document.
6. Always use protective clothing, gloves and goggles consistent with OSHA regulations during use. Avoid eye and skin contact. Do not ingest or inhale. Refer to Material Safety Data Sheet for detailed safety precautions.
7. For industrial/commercial use. Installation by trained personnel only.

BENEFITS

- *Anti-sag formula*
- *Long recoat times*
- *Ease of application*
- *Suited for horizontal and vertical surfaces*

RECOMMENDED USES

- *Round the corner radius at vertical to horizontal transitions*
  - *concrete walls and pedestals*
  - *steel tank chimes*
- *Smooth welds*
- *Fill small pits and voids in concrete*
- *General purpose patching*

GENERIC DESCRIPTION

Polyester Putty

STANDARD COLORS

Amber

PACKAGING

5-Gallon Unit

COVERAGE

231 in^3 / gallon

6 ft^2 / gallon @ 1/4" thickness

6614 GANT ROAD • HOUSTON, TEXAS 77066 • TEL: 281-397-0033 • FAX: 281-397-8512
www.polyspec.com

PolySpec®

SURFACE PREPARATION

Concrete: Apply only to clean, dry and sound concrete substrates that are free of all coatings, sealers, curing compounds, oils, greases or any other contaminants.

- *New concrete should be cured a minimum of 28 days.*
- *Concrete that has been contaminated with chemicals or other foreign matter must be neutralized or removed.*
- *Remove any laitance or weak surface layers.*
- *Concrete should have a minimum surface tensile strength of at least 300 PSI per ASTM D-4541.*
- *Surface profile shall be CSP-3 to CSP-5 meeting ICRI (International Concrete Repair Institute) standard guideline #03732 for coating concrete, producing a profile equal to 60-grit sandpaper or coarser. Prepare surface by mechanical means to achieve this desired profile.*
- *Moisture vapor transmission should be 3 pounds or less per 1,000 square feet over a 24 hour time period, as confirmed through a calcium chloride test, as per ASTM E-1907. Quantitative relative humidity (RH) testing, ASTM F-2170, should confirm concrete RH results <75%.*

Steel: For immersion service, "White Metal" abrasive blast with an anchor profile of 2–4 mils in accordance with Steel Structures Painting Council Specification SP-5-63 or NACE No. 1 is required. For splash and spillage exposure, "Near White" SP-10-63 or NACE No. 2 is required.

Refer to PolySpec Surface Preparation Guidelines for more details.

INSTALLATION STEPS

1. Prime surface with PolySpec 310 or 320 Primer. See data sheet for installation instructions.
2. Pour clear catalyst Hardener #1 into putty container. Stir well for one minute using a mechanical jiffy-type mixer operated at low speed.

   For best results (due to pot life), mix small quantities of PolySpec 731 at a time.

MIX RATIO	
• PolySpec 731 Putty	1 gallon
• Hardener #1	2 ounces

3. Trowel material onto surface using a spatula, putty knife or trowel.

   NOTE: Do not install in thicknesses greater than 1/2" in one application.
4. To smooth the surface, lightly brush the putty with a brush dipped in PolySpec Smoothing Liquid #1.

   NOTE: Some shrinkage may occur.
5. A second coat can be applied up to 72 hours after the first application.

   NOTE: Minimum recoat time is 2 hours @ 75°F.
6. For best results, clean tools and equipment with PolySpec® All Purpose Cleaner, a nonflammable and non-evaporating cleaner. Always wear gloves when using this product.

1gal Putty : 2 oz H / DOC PS731-TDS Rev 03/05

PolySpec is a ® Registered Trademark of PolySpec L.P.

© Copyright 2005 PolySpec L.P. All rights reserved. Published technical data and instructions are subject to change without notice. Please visit the online catalog at www.polyspec.com for the most current technical data and instructions. Or, you may contact your PolySpec representative for current technical data and instructions.

PolySpec, L.P. warrants its products to be free from defects in material and workmanship. PolySpec's sole obligation and Buyer's exclusive remedy in connection with the products shall be limited, at PolySpec's option, to either replacement of products not conforming to this warranty or credit to Buyer's account in the invoiced amount of the nonconforming products. Any claim under this Warranty must be made by Buyer to PolySpec in writing within five days of Buyer's discovery of the claimed defect, but in no event later than the expiration of the applicable shelf life, or one year from the delivery date, whichever is earlier. Buyer's failure to notify PolySpec of such nonconformance as required herein shall bar Buyer from recovery under this warranty.

PolySpec makes no other warranties concerning this product. No other warranties, either expressed or implied, or statutory, such as warranties of merchantability or fitness for a particular purpose, shall apply. In no event shall PolySpec be liable for consequential or incidental damages.

Any recommendation or suggestion relating to the use of the products made by PolySpec, whether in its technical literature, or in response to specific inquiry, or otherwise, is based on data believed to be reliable; however, the products and information are intended for use by Buyers having requisite skill and know-how in the industry, and therefore it is for the Buyer to satisfy itself of the suitability of the products for its own particular use, and it shall be deemed that Buyer has done so, at its sole discretion and risk. Variation in environment changes or procedures of use or extrapolation of data may cause unsatisfactory results. PolySpec cannot guarantee that color will conform to sample, if provided.

GENERAL SPECIFICATION FOR LINING STEEL TANKS WITH PERMAREZ[7] 333 CHEMICAL RESISTANT LINING

1.0 General

1.1 This specification covers the minimum requirements for installing PermaRez 333 Lining to the interior surfaces of steel tanks. Application should be done in accordance with this guideline by contractors qualified in installing this product.

1.2 A qualified contractor is defined as one with 1) a minimum of five years of experience in installing similar systems, 2) demonstrated financial stability in warranting work and 3) certification by PolySpec Corporation.

1.3 The work to be performed shall include furnishing of all labor, materials, tools and equipment required for lining all steel surfaces as outlined in this specification.

2.0 References

2.1 National Association of Corrosion Engineers (NACE):

NACE Standard RP0178-91 - Fabrication Details, Surface Finish Requirements, and Proper Design Considerations for Tanks and Vessels to be Lined for Immersion Service.

NACE Standard RP0188-90 - Discontinuity (Holiday) Testing of Protective Coatings.

NACE Standard RP0287-91 - Field Measurement of Surface Profile of Abrasive Blast Cleaned Steel Surfaces Using a Replica Tape.

NACE Standard RP0288-94 - Inspection of Linings on Steel and Concrete.

NACE Standard TM0170-70 - Visual Standards for Surfaces of New Steel Air Blast Cleaned with Sand Abrasive.

NACE No. 1 - White Metal Blast Cleaning.

2.2 Steel Structures Painting Council (SSPC):

SSPC-VIS-1-89 - Visual Standard for Abrasive Blast Cleaned Steel.

SSPC-SP 5 - White Metal Blast Cleaning.

3.0 Materials

Materials shall be manufactured by PolySpec Corporation (Phone 281-397-0033; Fax 281-397-6512) as indicated below:

3.1 PermaRez 333 Lining Resin

A pre-promoted vinyl ester novolac resin for saturating fiberglass and synthetic veils.

3.2 PermaRez 333 Topcoat Resin

A pre-promoted vinyl ester novolac resin containing a wax solution used for topcoating.

3.3 PolySpec[7] 300 Primer

A 10% high elongation vinyl ester primer with a minimum tensile bond to carbon steel of 1300 psi.

3.4 PolySpec[7] 730 Pre-Surfacer

A silica filled coating used for filling small holes and pits in steel surfaces prior to lining.

3.5 PolySpec[7] 731 Putty

A very high viscosity silica filled polyester putty for application to chime area and for smoothing welds prior to lining.

3.6 Fiberglass Chopped Strand Mat and Woven Roving

Reinforcement used with lining resin to provide high tensile strength.

3.7 Hardener #1

Methyl Ethyl Ketone Peroxide catalyst for the above resin systems. Hardener should be added at 1-1/2 to 2 oz. per gallon of resin product.

4.0 Delivery and Storage

4.1 All lining materials shall be delivered to the jobsite in their original, unopened containers with the proper, fully legible labels attached. Damaged containers shall be set apart and returned to the manufacturer for replacement.

4.2 Whenever possible, the work area and mixing area should be covered from exposure to direct sunlight. Due to limited shelf life, materials should be stored in their tightly sealed original containers in a dry place at temperatures between 65 and 80° F. Materials hall be used soon after containers have been opened. Shelf life for PermaRez 333 is 30 days from date of manufacture. Lining materials should only be applied at temperatures between 50 and 95° F.

5.0 Safety and Tank Preparation

5.1 All the preparation and application steps in this guideline specification shall be in accordance with manufacturer's MSDS instructions as well as Owner's site conditions and applicable Federal, state, and local rules and regulations.

5.2 Precautions should be taken when working with styrene based materials. Use materials only in adequately ventilated areas, keep away from open flames, and store in dry, covered areas. Organic peroxides are extremely volatile and shall be stored in a special location away from sources of heat.

5.3 Workers should always wear protective clothing, gloves and eyewear when working with these products. Respiratory protection is required.

5.4 Tanks shall be disconnected, commercially cleaned, and freed of gas below toxic and explosive limits by Owner.

5.5 The tank shall be well ventilated and equipped with sufficient explosion-proof equipment to remove dust and fumes from the tank interior.

5.6 All interior lighting shall be explosion-proof. All electrical equipment shall employ a ground fault interrupter.

5.7 Dehumidification equipment is required when working with vinyl ester resin based materials.

6.0 Tank Fabrication Requirements

6.1 Internal stiffeners and brackets shall be made of pipes and rods instead of angles and channels.

6.2 Internal welds shall be continuous but not necessarily smooth.

6.3 All sharp corners and edges of internal structural members shall be rounded

to a radius of 1/8" minimum.

6.4 Flanged connections should not be under 2" in diameter.

6.5 Small diameter nozzle inserts made of vinyl ester fiberglass reinforced material shall be provided and installed by the contractor.

7.0 Surface Preparation

7.1 All weld splatter shall be removed, and all burrs and sharp edges shall be ground down.

7.2 Surfaces to be lined shall be blasted to a SSPC-SP 5 or NACE No. 1 "White Metal" blast.

7.3 An anchor mil profile of 2-1/2-3 mils is required.

7.4 A non-silica grit, such as Black Beauty, is required (except boiler slag).

7.5 All traces of abrasive media and dust shall be removed after blasting.

8.0 Application

8.1 Priming. The blasted surface shall be primed before the surface begins to form rust. If rust begins to form, the surface shall be re-blasted. Apply one coat of PolySpec[7] 300 Primer by spray or roller. Primer resin is catalyzed by adding 1-1/2 to 2 oz. of Hardener #1 to a gallon of resin. Working time is limited, so the primer should be quickly applied. Recommended primer thickness is about 2-4 mils. Contractor shall take care to avoid excessive build-up of primer.

8.2 Putty. PolySpec[7] 731 Putty shall be catalyzed and applied by putty knife to the following areas:

a. Small pits, depressions and imperfections.

b. Welded plates, protrusions and lap joints (to smooth the surface transition).

c. The chime area to form a smooth radius.

d. Any riveted seams, where applicable.

8.3 Laminating Resin. Lining application may proceed once the primer is dry to the touch (usually after 6-8 hours at 70° F.) If the lining is delayed longer than three days, the surface may have to be re-primed.

The lay-up operation shall proceed as follows:

a. Cut two or three layers of chopped strand mat. Allowances shall be made for staggered joints with at least a 2" overlap.

b. Catalyze the resin with Hardener #1 at a rate of 1-1/2 to 2 oz./gallon of resin. Mix well.

c. Apply a heavy coat of catalyzed resin onto the surface by roller or spray.

d. Lay a fiberglass mat into the wet resin. Press the mat out using a serrated roller. All mat fibers shall be wetted out so that the whiteness of the mat disappears. Repeat until three bubble-free layers of chopped strand mat have been installed in one application.

e. Care should be taken that the mat is neither too dry nor too resin rich.

Each section of fiberglass shall overlap the next section by at least 3".

The bottom lay-up operation shall proceed with successive parallel courses with a 3" overlap.

8.4 Topcoat. A final topcoat shall be applied by roller or spray to all lined surfaces. This acts as a sealer to prevent air from inhibiting the ultimate cure. The entire lined area should be reinspected as outlined below. Patches can be made to the topcoat without grinding down the resin topcoat.

9.0 Inspection/Quality Assurance

9.1 There will be a pre-job meeting attended by all personnel including Owner, Contractor/Subcontractor, Safety Engineer, Inspector and Lining Manufacturer Representative.

9.2 All inspections shall be recorded and shall include the following information:

Date and time of day
Weather conditions (air and surface, humidity)
Description of surface preparation
Thicknesses per coat
Visual inspection of workmanship

9.3 Application temperature shall be at least 5 degrees above the dew point.

9.4 The Contractor shall take mil profile readings at periodic intervals during the blasting process.

9.5 After lamination, the entire lined surface should be inspected for defects such as resin puddling, wrinkles, burrs, bubbles and uncured resin.

9.6 The Contractor shall randomly test the lining thickness with a dry film mil gauge. Total dry film thickness is a minimum of 100 mils.

9.7 To test curability of the lining, the Contractor shall randomly test the surface hardness with a Barcol Hardness Tester. The lining should show a minimum reading of 30 after 24 hours of curing and 40 after five to seven days of curing.

9.8 Pinholes in the lining should be detected using a Holiday Detector set at a minimum of 10,000 volts or 100 volts/mil.

9.9 Defects in the lining shall be repaired with a patch of the resin/fiberglass lining that extends at least 3" over the patched area. The patch should be applied using the same techniques as outlined above. Where it is necessary to cut into the lining to remove an inferior section, the depression should be filled with putty prior to the application of the patch.

9.10 Retest all patched areas following the above steps.

10.0 Warranty

10.1 Manufacturer shall warrant that its products are free from defects. Manufacturer shall provide a materials warranty to the Owner for a period of one year from date of manufacture. Liability, if any, is limited to product replacement.

10.2 Manufacturer and contractor may also provide a joint warranty for product installation for a period of one year from date of installation. The contract shall specifically stipulate what constitutes a failure of the coating system and the operating conditions for the coating system. Liability, if any, for the manufacturer is limited to product replacement and, for the contractor, re-installation costs. This warranty specifically excludes liabilities for consequential or incidental damages.

Industrial & Marine Coatings

4.53 MACROPOXY® 646 FAST CURE EPOXY

PART A B58-600
PART B B58V600
SERIES HARDENER

PRODUCT INFORMATION

Revised 9/07

PRODUCT DESCRIPTION

MACROPOXY 646 FAST CURE EPOXY is a high solids, high build, fast drying, polyamide epoxy designed to protect steel and concrete in industrial exposures. Ideal for maintenance painting and fabrication shop applications. The high solids content ensures adequate protection of sharp edges, corners, and welds. This product can be applied directly to marginally prepared steel surfaces.

- Low VOC
- Low odor
- Chemical resistant
- Abrasion resistant

RECOMMENDED USES

- Marine applications
- Fabrication shops
- Pulp and paper mills
- Power plants
- Offshore platforms
- Refineries
- Chemical plants
- Tank exteriors
- Water treatment plants
- Mill White and Black are acceptable for immersion use for salt water and fresh water, not acceptable for potable water
- Suitable for use in USDA inspected facilities

Conforms to AWWA D102-03 OCS #5

PRODUCT CHARACTERISTICS

Finish:	Semi-Gloss
Color:	Mill White, Black and a wide range of colors available through tinting
Volume Solids: Mill White	72% ± 2%, mixed
Weight Solids: Mill White	85% ± 2%, mixed
VOC (EPA Method 24): mixed	Unreduced: <250 g/L; 2.08 lb/gal Reduced 10%: <300 g/L; 2.50 lb/gal
Mix Ratio:	1:1 by volume

Recommended Spreading Rate per coat:

Wet mils:	7.0 - 13.5
Dry mils:	5.0 - 10.0*
Coverage:	116 - 232 sq ft/gal approximate

NOTE: Brush or roll application may require multiple coats to achieve maximum film thickness and uniformity of appearance.
* See Recommended Systems

Drying Schedule @ 7.0 mils wet and 50% RH:

	@ 40°F	@ 77°F	@ 100°F
To touch:	4-5 hours	2 hours	1½ hours
To handle:	48 hours	8 hours	4½ hours
To recoat:			
minimum:	48 hours	8 hours	4½ hours
maximum:	1 year	1 year	1 year
Cure for			
service:	10 days	7 days	4 days
immersion:	14 days	7 days	4 days

If maximum recoat time is exceeded, abrade surface before recoating.
Drying time is temperature, humidity and film thickness dependent.

Pot Life:	10 hours	4 hours	2 hours
Sweat-in-time:	30 minutes	30 minutes	15 minutes

Shelf Life: 36 months, unopened
Store indoors at 40°F to 100°F.

Flash Point: 91°F, TCC, mixed

Reducer/Clean Up: Reducer, R7K15
In California: Reducer R7K111 or Oxsol 100

PERFORMANCE CHARACTERISTICS

System Tested: (unless otherwise indicated)
Substrate: Steel
Surface Preparation: SSPC-SP10
1 ct. Macropoxy 646 Fast Cure @ 6.0 mils dft

Abrasion Resistance:
Method: ASTM D4060, CS17 wheel, 1000 cycles, 1 kg load
Result: 84 mg loss

Accelerated Weathering - QUV, Zinc Clad II Plus Primer:
Method: ASTM D4587, QUV-A, 12,000 hours
Results: passes

Adhesion:
Method: ASTM D4541
Result: 1,037 psi

Corrosion Weathering, Zinc Clad II Plus Primer:
Method: ASTM D5894, 36 cycles, 12,000 hours
Result: Rating 10 per ASTM D714 for blistering
Rating 9 per ASTM D610 for rusting

Direct Impact Resistance:
Method: ASTM D2794
Result: 30 in. lb.

Dry Heat Resistance:
Method: ASTM D2485
Result: 250°F

Exterior Durability:
Method: 1 year at 45° South
Result: Excellent, chalks

Flexibility:
Method: ASTM D522, 180° bend, 3/4" mandrel
Result: Passes

Humidity Resistance
Method: ASTM D4585, 6000 hrs
Result: No blistering, cracking, or rusting

Immersion:
Method: 1 year fresh and salt water
Result: Passes, no rusting, blistering, or loss of adhesion

Irradiation-Effects on Coatings used in Nuclear Power Plants
Method: ANSI 5.12 / ASTM D4082-89
Result: Passes

Pencil Hardness:
Method: ASTM D3363
Result: 3H

Water Vapor Permeance:
Method: ASTM D1653, Method B
Result: 1.16 US perms

Salt Fog Resistance, Zinc Clad II Plus Primer::
Method: ASTM B117, 6,500 hours
Result: Rating 10 per ASTM D610 for rusting
Rating 9 per ASTM D1654 for corrosion

Slip Coefficient, Mill White:
Method: AISC Specification for Structural Joints Using ASTM A325 or ASTM A490 Bolts
Result: Class A, 0.36

Epoxy coatings may darken or discolor following application and curing.

continued on back

Industrial & Marine Coatings

4.53 MACROPOXY® 646 FAST CURE EPOXY

PART A B58-600
PART B B58V600
SERIES HARDENER

PRODUCT INFORMATION

RECOMMENDED SYSTEMS

Immersion and atmospheric:

Steel:
2 cts. Macropoxy 646 @ 5.0 - 10.0 mils dft/ct

Concrete/Masonry, smooth:
2 cts. Macropoxy 646 @ 5.0 - 10.0 mils dft/ct

Concrete Block:
1 ct. Kem Cati-Coat HS Epoxy Filler/Sealer @ 10.0 - 20.0 mils dft, as needed to fill voids and provide a continuous substrate.
2 cts. Macropoxy 646 @ 5.0 - 10.0 mils dft/ct

Atmospheric:
***Steel:**
(Shop applied system, new construction, AWWA D102-03, can also be used at 3 mils minimum dft when used as an intermediate coat as part of a multi-coat system)
1 ct. Macropoxy 646 Fast Cure Epoxy @ 3.0 - 6.0 mils dft
1-2 cts. of recommended topcoat

Steel:
1 ct. Recoatable Epoxy Primer @ 4.0 - 6.0 mils dft
2 cts. Macropoxy 646 @ 5.0 - 10.0 mils dft/ct

***Steel:**
1 ct. Macropoxy 646 @ 4.0 - 6.0 mils dft
1-2 cts. Acrolon 218 Polyurethane @ 3.0 - 6.0 mils dft/ct
or Hi-Solids Polyurethane @ 3.0 - 5.0 mils dft/ct
or SherThane 2K Urethane @ 2.0 - 4.0 mils dft/ct

Steel:
2 cts. Macropoxy 646 @ 5.0 - 10.0 mils dft/ct
1-2 cts. Tile-Clad HS Epoxy @ 2.5 - 4.0 mils dft/ct

Steel:
1 ct. Zinc Clad II Plus @ 3.0 - 6.0 mils dft
1 ct. Macropoxy 646 @ 5.0 - 10.0 mils dft
1-2 cts. Acrolon 218 Polyurethane @ 3.0 - 6.0 mils dft/ct

Steel:
1 ct. Zinc Clad III HS @ 3.0 - 5.0 mils dft
or Zinc Clad IV @ 3.0 - 5.0 mils dft
1 ct. Macropoxy 646 @ 5.0 - 10.0 mils dft
1-2 cts. Acrolon 218 Polyurethane @ 3.0 - 6.0 mils dft/ct

Aluminum:
2 cts. Macropoxy 646 @ 5.0 - 10.0 mils dft/ct

Galvanizing:
2 cts. Macropoxy 646 @ 5.0 - 10.0 mils dft/ct

The systems listed above are representative of the product's use. Other systems may be appropriate.

SURFACE PREPARATION

Surface must be clean, dry, and in sound condition. Remove all oil, dust, grease, dirt, loose rust, and other foreign material to ensure good adhesion.
Refer to product Application Bulletin for detailed surface preparation information.
Minimum recommended surface preparation:

Iron & Steel	
Atmospheric:	SSPC-SP2/3
Immersion:	SSPC-SP10/NACE 2, 2-3 mil profile
Aluminum:	SSPC-SP1
Galvanizing:	SSPC-SP1
Concrete & Masonry	
Atmospheric:	SSPC-SP13/NACE 6, or ICRI 03732, CSP 1-3
Immersion:	SSPC-SP13/NACE 6-4.3.1 or 4.3.2, or ICRI 03732, CSP 1-3

TINTING

Tint Part A with 844 Colorants at 150% strength. Five minutes minimum mixing on a mechanical shaker is required for complete mixing of color.

Tinting is not recommended for Immersion service.

APPLICATION CONDITIONS

Temperature:	40°F minimum, 140°F maximum (air, surface, and material)
	At least 5°F above dew point
Relative humidity:	85% maximum

Refer to product Application Bulletin for detailed application information.

ORDERING INFORMATION

Packaging:	
Part A:	1 and 5 gallon containers
Part B:	1 and 5 gallon containers
Weight per gallon:	12.9 ± 0.2 lb mixed, may vary by color

SAFETY PRECAUTIONS

Refer to the MSDS sheet before use.

Published technical data and instructions are subject to change without notice. Contact your Sherwin-Williams representative for additional technical data and instructions.

DISCLAIMER

The information and recommendations set forth in this Product Data Sheet are based upon tests conducted by or on behalf of The Sherwin-Williams Company. Such information and recommendations set forth herein are subject to change and pertain to the product offered at the time of publication. Consult your Sherwin-Williams representative to obtain the most recent Product Data Information and Application Bulletin.

WARRANTY

The Sherwin-Williams Company warrants our products to be free of manufacturing defects in accord with applicable Sherwin-Williams quality control procedures. Liability for products proven defective, if any, is limited to replacement of the defective product or the refund of the purchase price paid for the defective product as determined by Sherwin-Williams. NO OTHER WARRANTY OR GUARANTEE OF ANY KIND IS MADE BY SHERWIN-WILLIAMS, EXPRESSED OR IMPLIED, STATUTORY, BY OPERATION OF LAW OR OTHERWISE, INCLUDING MERCHANTABILITY AND FITNESS FOR A PARTICULAR PURPOSE.

Industrial & Marine Coatings

4.53A MACROPOXY® 646 FAST CURE EPOXY

PART A B58-600
PART B B58V600

SERIES
HARDENER

APPLICATION BULLETIN

Revised 9/07

SURFACE PREPARATION

Surface must be clean, dry, and in sound condition. Remove all oil, dust, grease, dirt, loose rust, and other foreign material to ensure adequate adhesion.

Iron & Steel, Atmospheric Service:
Minimum surface preparation is Hand Tool Clean per SSPC-SP2. Remove all oil and grease from surface by Solvent Cleaning per SSPC-SP1. For better performance, use Commercial Blast Cleaning per SSPC-SP6/NACE 3, blast clean all surfaces using a sharp, angular abrasive for optimum surface profile (2 mils). Prime any bare steel within 8 hours or before flash rusting occurs.

Iron & Steel, Immersion Service:
Remove all oil and grease from surface by Solvent Cleaning per SSPC-SP1. Minimum surface preparation is Near White Metal Blast Cleaning per SSPC-SP10/NACE 2. Blast clean all surfaces using a sharp, angular abrasive for optimum surface profile (2-3 mils). Remove all weld spatter and round all sharp edges by grinding. Prime any bare steel the same day as it is cleaned.

Aluminum
Remove all oil, grease, dirt, oxide and other foreign material by Solvent Cleaning per SSPC-SP1.

Galvanized Steel
Allow to weather a minimum of six months prior to coating. Solvent Clean per SSPC-SP1 (recommended solvent is VM&P Naphtha). When weathering is not possible, or the surface has been treated with chromates or silicates, first Solvent Clean per SSPC-SP1 and apply a test patch. Allow paint to dry at least one week before testing adhesion. If adhesion is poor, brush blasting per SSPC-SP7 is necessary to remove these treatments. Rusty galvanizing requires a minimum of Hand Tool Cleaning per SSPC-SP2, prime the area the same day as cleaned.

Concrete and Masonry, Atmospheric Service:
For surface preparation, refer to NACE 6/SSPC-SP13, or ICRI 03732, CSP 1-3. Surfaces should be thoroughly clean and dry. Concrete and mortar must be cured at least 28 days @ 75°F. Remove all loose mortar and foreign material. Surface must be free of laitance, concrete dust, dirt, form release agents, moisture curing membranes, loose cement and hardeners. Fill bug holes, air pockets and other voids with a cement patching compound. Weathered masonry and soft or porous cement board must be brush blasted or power tool cleaned to remove loosely adhering contamination and to get to a hard, firm surface. Laitance must be removed by etching with a 10% muriatic acid solution and thoroughly neutralized with water.

Concrete and Masonry, Immersion Service:
For surface preparation, refer to SSPC-SP13/NACE 6, Section 4.3.1 or 4.3.2, or ICRI 03732, CSP 1-3.

Previously Painted Surfaces
If in sound condition, clean the surface of all foreign material. Smooth, hard or glossy coatings and surfaces should be dulled by abrading the surface. Apply a test area, allowing paint to dry one week before testing adhesion. If adhesion is poor, or if this product attacks the previous finish, removal of the previous coating may be necessary. If paint is peeling or badly weathered, clean surface to sound substrate and treat as a new surface as above.

APPLICATION CONDITIONS

Temperature:	40°F minimum, 140°F maximum (air, surface, and material) At least 5°F above dew point
Relative humidity:	85% maximum

APPLICATION EQUIPMENT

The following is a guide. Changes in pressures and tip sizes may be needed for proper spray characteristics. Always purge spray equipment before use with listed reducer. Any reduction must be compliant with existing VOC regulations and compatible with the existing environmental and application conditions.

Reducer/Clean Up ..... Reducer R7K15
In California ..... Reducer R7K111

Airless Spray
Pump 30:1
Pressure ..... 2800 - 3000 psi
Hose ..... 1/4" ID
Tip ..... .017" - .023"
Filter ..... 60 mesh
Reduction ..... As needed up to 10% by volume

Conventional Spray
Gun ..... DeVilbiss MBC-510
Fluid Tip ..... E
Air Nozzle 704
Atomization Pressure .. 60-65 psi
Fluid Pressure ..... 10-20 psi
Reduction ..... As needed up to 10% by volume
Requires oil and moisture separators

Brush
Brush ..... Nylon/Polyester or Natural Bristle
Reduction ..... Not recommended

Roller
Cover ..... 3/8" woven with phenolic core
Reduction ..... Not recommended

If specific application equipment is listed above, equivalent equipment may be substituted.

continued on back

Industrial & Marine Coatings

4.53A MACROPOXY® 646 FAST CURE EPOXY

PART A B58-600
PART B B58V600

SERIES HARDENER

APPLICATION BULLETIN

APPLICATION PROCEDURES

Surface preparation must be completed as indicated.

Mix contents of each component thoroughly with power agitation. Make certain no pigment remains on the bottom of the can. Then combine one part by volume of Part A with one part by volume of Part B. Thoroughly agitate the mixture with power agitation. Allow the material to sweat-in as indicated prior to application. Re-stir before using.

If reducer solvent is used, add only after both components have been thoroughly mixed, after sweat-in.

Apply paint to the recommended film thickness and spreading rate as indicated below:

Recommended Spreading Rate per coat:

Wet mils:	7.0 - 13.5
Dry mils:	5.0 - 10.0*
Coverage:	116 - 232 sq ft/gal approximate

NOTE: Brush or roll application may require multiple coats to achieve maximum film thickness and uniformity of appearance.
* See Recommended Systems

Drying Schedule @ 7.0 mils wet and 50% RH:

	@ 40°F	@ 77°F	@ 100°F
To touch:	4-5 hours	2 hours	1½ hours
To handle:	48 hours	8 hours	4½ hours
To recoat:			
minimum:	48 hours	8 hours	4½ hours
maximum:	1 year	1 year	1 year
Cure for			
service:	10 days	7 days	4 days
immersion:	14 days	7 days	4 days

If maximum recoat time is exceeded, abrade surface before recoating.
Drying time is temperature, humidity and film thickness dependent.

Pot Life:	10 hours	4 hours	2 hours
Sweat-In-time:	30 minutes	30 minutes	15 minutes

Application of coating above maximum or below minimum recommended spreading rate may adversely affect coating performance.

PERFORMANCE TIPS

Stripe coat all crevices, welds, and sharp angles to prevent early failure in these areas.

When using spray application, use a 50% overlap with each pass of the gun to avoid holidays, bare areas, and pinholes. If necessary, cross spray at a right angle

Spreading rates are calculated on volume solids and do not include an application loss factor due to surface profile, roughness or porosity of the surface, skill and technique of the applicator, method of application, various surface irregularities, material lost during mixing, spillage, overthinning, climatic conditions, and excessive film build.

Excessive reduction of material can affect film build, appearance, and adhesion.

Do not mix previously catalyzed material with new.

Do not apply the material beyond recommended pot life.

In order to avoid blockage of spray equipment, clean equipment before use or before periods of extended downtime with Reducer R7K15. In California use Reducer R7K111.

Tinting is not recommended for immersion service.

Use only Mil White and Black for immersion service.

Quik-Kick Epoxy Accelerator is acceptable for use. See data page 4.99 for details.

Refer to Product Information sheet for additional performance characteristics and properties.

CLEAN UP INSTRUCTIONS

Clean spills and spatters immediately with Reducer R7K15. Clean tools immediately after use with Reducer R7K15. In California use Reducer R7K111. Follow manufacturer's safety recommendations when using any solvent.

SAFETY PRECAUTIONS

Refer to the MSDS sheet before use.

Published technical data and instructions are subject to change without notice. Contact your Sherwin-Williams representative for additional technical data and instructions.

MATERIAL SAFETY DATA SHEET

B58W610
12 00

DATE OF PREPARATION
Mar 26, 2009

SECTION 1 — PRODUCT AND COMPANY IDENTIFICATION

PRODUCT NUMBER
B58W610
PRODUCT NAME
MACROPOXY® 646 Fast Cure Epoxy Coating (Part A), Mill White
MANUFACTURER'S NAME
THE SHERWIN-WILLIAMS COMPANY
101 Prospect Avenue N.W.
Cleveland, OH 44115

Telephone Numbers and Websites

Product Information	www.sherwin-williams.com
Regulatory Information	(216) 566-2902 www.paintdocs.com
Medical Emergency	(216) 566-2917
Transportation Emergency*	(800) 424-9300

*for Chemical Emergency ONLY (spill, leak, fire, exposure, or accident)

SECTION 2 — COMPOSITION/INFORMATION ON INGREDIENTS

% by Weight	CAS Number	Ingredient	Units	Vapor Pressure
3	100-41-4	**Ethylbenzene**		
		ACGIH TLV	100 PPM	7.1 mm
		ACGIH TLV	125 PPM STEL	
		OSHA PEL	100 PPM	
		OSHA PEL	125 PPM STEL	
15	1330-20-7	**Xylene**		
		ACGIH TLV	100 PPM	5.9 mm
		ACGIH TLV	150 PPM STEL	
		OSHA PEL	100 PPM	
		OSHA PEL	150 PPM STEL	
11	68410-23-1	**Polyamide**		
		ACGIH TLV	Not Available	
		OSHA PEL	Not Available	
9	14807-96-6	**Talc**		
		ACGIH TLV	2 mg/m3 as Resp. Dust	
		OSHA PEL	2 mg/m3 as Resp. Dust	
31	13463-67-7	**Titanium Dioxide**		
		ACGIH TLV	10 mg/m3 as Dust	
		OSHA PEL	10 mg/m3 Total Dust	
		OSHA PEL	5 mg/m3 Respirable Fraction	

SECTION 3 — HAZARDS IDENTIFICATION

ROUTES OF EXPOSURE
INHALATION of vapor or spray mist.
EYE or SKIN contact with the product, vapor or spray mist.

HMIS Codes

Health	3*
Flammability	3
Reactivity	0

EFFECTS OF OVEREXPOSURE
EYES: Irritation.
SKIN: Prolonged or repeated exposure may cause irritation.
INHALATION: Irritation of the upper respiratory system.

May cause nervous system depression. Extreme overexposure may result in unconsciousness and possibly death.
Prolonged overexposure to solvent ingredients In Section 2 may cause adverse effects to the liver, urinary and reproductive systems.

SIGNS AND SYMPTOMS OF OVEREXPOSURE
Headache, dizziness, nausea, and loss of coordination are indications of excessive exposure to vapors or spray mists.
Redness and itching or burning sensation may indicate eye or excessive skin exposure.

MEDICAL CONDITIONS AGGRAVATED BY EXPOSURE
May cause allergic skin reaction in susceptible persons or skin sensitization.
CANCER INFORMATION
For complete discussion of toxicology data refer to Section 11.

SECTION 4 — FIRST AID MEASURES

EYES: Flush eyes with large amounts of water for 15 minutes. Get medical attention.
SKIN: Wash affected area thoroughly with soap and water.
Remove contaminated clothing and launder before re-use.
INHALATION: If affected, remove from exposure. Restore breathing. Keep warm and quiet.
INGESTION: Do not induce vomiting. Get medical attention immediately.

SECTION 5 — FIRE FIGHTING MEASURES

FLASH POINT	LEL	UEL	FLAMMABILITY CLASSIFICATION
85 °F PMCC	1.0	7.0	RED LABEL -- Flammable, Flash below 100 °F (38 °C)

EXTINGUISHING MEDIA
Carbon Dioxide, Dry Chemical, Foam
UNUSUAL FIRE AND EXPLOSION HAZARDS
Closed containers may explode when exposed to extreme heat.
Application to hot surfaces requires special precautions.
During emergency conditions overexposure to decomposition products may cause a health hazard. Symptoms may not be immediately apparent. Obtain medical attention.
SPECIAL FIRE FIGHTING PROCEDURES
Full protective equipment including self-contained breathing apparatus should be used.
Water spray may be ineffective. If water is used, fog nozzles are preferable. Water may be used to cool closed containers to prevent pressure build-up and possible autoignition or explosion when exposed to extreme heat.

SECTION 6 — ACCIDENTAL RELEASE MEASURES

STEPS TO BE TAKEN IN CASE MATERIAL IS RELEASED OR SPILLED
- Remove all sources of ignition. Ventilate the area.
- Remove with inert absorbent.

SECTION 7 — HANDLING AND STORAGE

STORAGE CATEGORY
DOL Storage Class IC
PRECAUTIONS TO BE TAKEN IN HANDLING AND STORAGE
Contents are FLAMMABLE. Keep away from heat, sparks, and open flame.
During use and until all vapors are gone: Keep area ventilated - Do not smoke - Extinguish all flames, pilot lights, and heaters - Turn off stoves, electric tools and appliances, and any other sources of ignition.
Consult NFPA Code. Use approved Bonding and Grounding procedures.
Keep container closed when not in use. Transfer only to approved containers with complete and appropriate labeling. Do not take internally. Keep out of the reach of children.

SECTION 8 — EXPOSURE CONTROLS/PERSONAL PROTECTION

PRECAUTIONS TO BE TAKEN IN USE
Use only with adequate ventilation.
Avoid contact with skin and eyes. Avoid breathing vapor and spray mist.
Wash hands after using.
This coating may contain materials classified as nuisance particulates (listed "as Dust" in Section 2) which may be present at hazardous levels only during sanding or abrading of the dried film. If no specific dusts are listed in Section 2, the applicable limits for nuisance dusts are ACGIH TLV 10 mg/m3 (total dust), 3 mg/m3 (respirable fraction), OSHA PEL 15 mg/m3 (total dust), 5 mg/m3 (respirable fraction).
VENTILATION
Local exhaust preferable. General exhaust acceptable if the exposure to materials in Section 2 is maintained below applicable exposure limits. Refer to OSHA Standards 1910.94, 1910.107, 1910.108.
RESPIRATORY PROTECTION
If personal exposure cannot be controlled below applicable limits by ventilation, wear a properly fitted organic vapor/particulate respirator approved by NIOSH/MSHA for protection against materials in Section 2.
When sanding or abrading the dried film, wear a dust/mist respirator approved by NIOSH/MSHA for dust which may be generated from this product, underlying paint, or the abrasive.
PROTECTIVE GLOVES
Wear gloves which are recommended by glove supplier for protection against materials in Section 2.
EYE PROTECTION
Wear safety spectacles with unperforated sideshields.

OTHER PRECAUTIONS

This product must be mixed with other components before use. Before opening the packages, READ AND FOLLOW WARNING LABELS ON ALL COMPONENTS.

Intentional misuse by deliberately concentrating and inhaling the contents can be harmful or fatal.

SECTION 9 — PHYSICAL AND CHEMICAL PROPERTIES

PRODUCT WEIGHT	12.19 lb/gal	1460 g/l
SPECIFIC GRAVITY	1.47	
BOILING POINT	277 - 292 °F	136 - 144 °C
MELTING POINT	Not Available	
VOLATILE VOLUME	29%	
EVAPORATION RATE	Slower than ether	
VAPOR DENSITY	Heavier than air	
SOLUBILITY IN WATER	N.A.	

VOLATILE ORGANIC COMPOUNDS (VOC Theoretical - As Packaged)

2.11lb/gal	253g/l	Less Water and Federally Exempt Solvents
2.11lb/gal	253g/l	Emitted VOC

SECTION 10 — STABILITY AND REACTIVITY

STABILITY — Stable

CONDITIONS TO AVOID

None known.

INCOMPATIBILITY

None known.

HAZARDOUS DECOMPOSITION PRODUCTS

By fire: Carbon Dioxide, Carbon Monoxide

HAZARDOUS POLYMERIZATION

Will not occur

SECTION 11 — TOXICOLOGICAL INFORMATION

CHRONIC HEALTH HAZARDS

Reports have associated repeated and prolonged overexposure to solvents with permanent brain and nervous system damage.

Ethylbenzene is classified by IARC as possibly carcinogenic to humans (2B) based on inadequate evidence in humans and sufficient evidence in laboratory animals. Lifetime inhalation exposure of rats and mice to high ethylbenzene concentrations resulted in increases in certain types of cancer, including kidney tumors in rats and lung and liver tumors in mice. These effects were not observed in animals exposed to lower concentrations. There is no evidence that ethylbenzene causes cancer in humans.

IARC's Monograph No. 93 reports there is sufficient evidence of carcinogenicity in experimental rats exposed to titanium dioxide but inadequate evidence for carcinogenicity in humans and has assigned a Group 2B rating. In addition, the IARC summary concludes, "No significant exposure to titanium dioxide is thought to occur during the use of products in which titanium is bound to other materials, such as paint."

TOXICOLOGY DATA

CAS No.	Ingredient Name			
100-41-4	Ethylbenzene			
		LC50 RAT	4HR	Not Available
		LD50 RAT		3500 mg/kg
1330-20-7	Xylene			
		LC50 RAT	4HR	5000 ppm
		LD50 RAT		4300 mg/kg
68410-23-1	Polyamide			
		LC50 RAT	4HR	Not Available
		LD50 RAT		8000. mg/kg
14807-96-6	Talc			
		LC50 RAT	4HR	Not Available
		LD50 RAT		Not Available
13463-67-7	Titanium Dioxide			
		LC50 RAT	4HR	Not Available
		LD50 RAT		Not Available

SECTION 12 — ECOLOGICAL INFORMATION

ECOTOXICOLOGICAL INFORMATION

No data available.

SECTION 13 — DISPOSAL CONSIDERATIONS

WASTE DISPOSAL METHOD

Waste from this product may be hazardous as defined under the Resource Conservation and Recovery Act (RCRA) 40 CFR 261.
Waste must be tested for Ignitability to determine the applicable EPA hazardous waste numbers.
Incinerate in approved facility. Do not incinerate closed container. Dispose of in accordance with Federal, State/Provincial, and Local regulations regarding pollution.

SECTION 14 — TRANSPORT INFORMATION

US Ground (DOT)

1 Gallon and Less may be Classed as CONSUMER COMMODITY, ORM-D
Larger Containers are Regulated as:
UN1263, PAINT, 3, PG III, (ERG#128)

DOT (Dept of Transportation) Hazardous Substances & Reportable Quantities

Ethyl benzene 1000 lb RQ
Xylenes (isomers and mixture) 100 lb RQ

Bulk Containers may be Shipped as (check reportable quantities):

RQ, UN1263, PAINT, 3, PG III, (XYLENES (ISOMERS AND MIXTURE)), (ERG#128)

Canada (TDG)

UN1263, PAINT, CLASS 3, PG III, LIMITED QUANTITY, (ERG#128)

IMO

UN1263, PAINT, CLASS 3, PG III, (29 C c.c.), EmS F-E, S-E

SECTION 15 — REGULATORY INFORMATION

SARA 313 *(40 CFR 372.65C)* SUPPLIER NOTIFICATION

CAS No.	CHEMICAL/COMPOUND	% by WT	% Element
100-41-4	Ethylbenzene	3	
1330-20-7	Xylene	15	

CALIFORNIA PROPOSITION 65

WARNING: This product contains chemicals known to the State of California to cause cancer and birth defects or other reproductive harm.

TSCA CERTIFICATION

All chemicals in this product are listed, or are exempt from listing, on the TSCA Inventory.

SECTION 16 — OTHER INFORMATION

This product has been classified in accordance with the hazard criteria of the Canadian Controlled Products Regulations (CPR) and the MSDS contains all of the information required by the CPR.

The above information pertains to this product as currently formulated, and is based on the information available at this time. Addition of reducers or other additives to this product may substantially alter the composition and hazards of the product. Since conditions of use are outside our control, we make no warranties, express or implied, and assume no liability in connection with any use of this information.

Industrial & Marine Coatings

5.35

POLYLON HP POLYURETHANE

PART A B65-525
PART B B65V525

SERIES
HARDENER

PRODUCT INFORMATION

Revised 11/08

PRODUCT DESCRIPTION

POLYLON HP POLYURETHANE is a high performance, high solids two component, exterior/interior, low VOC, polyester-aliphatic urethane coating. Provides a high gloss, excellent chemical resistance, color retention, and chalk resistance.

- Outstanding resistance to a wide range of chemical, weather, and mechanical conditions
- Abrasion and impact resistant
- Superior exterior color and gloss retention.

RECOMMENDED USES

- For industrial, commercial, or marine applications where a heavy duty polyurethane coating is required
- Resists splash, spillage, and fumes of dilute acids, alkalies, solvents, and fuels
- Tank Exteriors
- Pipelines
- Bridges
- Machinery and Equipment
- Marine Vessels
- Product finish type application
- Suitable for use in USDA inspected facilities

PRODUCT CHARACTERISTICS

Finish: Gloss

Color: Wide range of colors available

Volume Solids: 70% ± 2%, mixed, may vary by color

Weight Solids: 80% ± 2%, mixed, may vary by color

VOC (EPA Method 24): Unreduced: <250 g/L; 2.1 lb/gal
mixed
Reduced 10%: <340 g/L; 2.8 lb/gal

Mix Ratio: 2:1 by volume

Recommended Spreading Rate per coat:

Wet mils:	3.0 - 4.5
Dry mils:	2.0 - 3.0
Coverage:	380 - 570 sq ft/gal approximate

Drying Schedule @ 4.0 mils wet @ 50% RH:

	@50°F	@ 77°F	@100°F
To touch:	16 hours	2 hours	30 minutes
To handle:	24 hours	5 hours	2 hours
To recoat:			
minimum:	24 hours	12 hours	2 hours
maximum:	3 days48 hours		24 hours
To cure:	7 days7 days 5 days		

If maximum recoat time is exceeded, abrade surface before recoating. Drying time is temperature, humidity, and film thickness dependent.

Pot Life: 5 hours 4 hours 45 minutes

Sweat-in-Time: None required

Shelf Life:
Part A: 36 months, unopened
Part B: 24 months, unopened
Store indoors at 40°F to 100°F

Flash Point: 102°F TCC, mixed

Reducer: Reducer #225, R7K225

PERFORMANCE CHARACTERISTICS

System Tested: (Unless otherwise indicated)
Substrate: Steel
Surface Preparation: SSPC-SP10
1 ct. Macropoxy 646 @6.0 mils dft
1 ct. Polylon HP @ 3.0 mils dft

Abrasion Resistance:
Method: ASTM D4060, CS17 wheel, 1000 cycles, 1 kg load
Result: 63 mg loss (average of 5 trials)

Accelerated Weathering -QUV:
Method: ASTM D4587, QUV-A 3000 hours
Results: Passes, >70% Gloss retention
Meets the requirements of SSPC Paint No.36, Level3.

Adhesion, steel:
Method: ASTM D3359 Method B
Result: 5B
Method: ASTM D4541
Result: 1200 psi

Direct Impact Resistance:
Method: ASTM D2794
Result: 100 in. lb.

Dry Heat Resistance:
Method: ASTM D2485
Result: 200°F, 250°F intermittent

Exterior Durability:
Method: 2 years at 45° South
Result: Excellent, 87% gloss retention

Flexibility:
Method: ASTM D522, 180° bend, 1/4" mandrel
Result: Passes

Humidity Resistance:
Method: ASTM D4585, 100°F, 2000 hours
Result: No blistering, cracking, softening or delamination

Pencil Hardness:
Method: ASTM D3363
Result: H

Salt Fog Resistance, with primer:
Method: ASTM B117, 1000 hours
Result: Rating 10 per ASTM D610 for rusting, less than 1/16" creepage at scribe. No blistering, cracking, softening, or delamination of the film.

continued on back

Industrial & Marine Coatings

5.35

POLYLON HP POLYURETHANE

PART A B65-525
PART B B65V525

SERIES
HARDENER

PRODUCT INFORMATION

RECOMMENDED SYSTEMS

Steel:
1-2 cts. Macropoxy 646 @ 5.0 - 10.0 mils dft/ct
1-2 cts. Poly-Lon HP Polyurethane @ 2.0 - 3.0 mils dft/ct

Steel:
1-2 cts. Recoatable Epoxy Primer @ 4.0 - 6.0 mils dft/ct
1-2 cts. Poly-Lon HP Polyurethane @ 2.0 - 3.0 mils dft/ct

Steel:
1 ct. Zinc Clad II Plus @ 3.0 - 5.0 mils dft
1 ct. Epolon II Epoxy Primer @ 2.0 - 4.0 mils dft
1-2 cts. Poly-Lon HP Polyurethane @ 2.0 - 3.0 mils dft/ct

Steel:
1 ct. Epoxy Mastic Aluminum II @ 6.0 mils dft
1-2 cts. Poly-Lon HP Polyurethane @ 2.0 - 3.0 mils dft/ct

Galvanizing:
1-2 cts. Epolon II Epoxy Primer @ 2.0 - 4.0 mils dft/ct
1-2 cts. Poly-Lon HP Polyurethane @ 2.0 - 3.0 mils dft/ct

Concrete/Masonry:
1 ct. Kem Cati-Coat HS Epoxy Filler/Sealer @ 10.0 - 20.0 mils dft
1-2 cts. Poly-Lon HP Polyurethane @ 2.0 - 3.0 mils dft/ct

The systems listed above are representative of the product's use. Other systems may be appropriate.

SURFACE PREPARATION

Surface must be clean, dry, and in sound condition. Remove all oil, dust, grease, dirt, loose rust, and other foreign material to ensure adequate adhesion.

Refer to product Application Bulletin for detailed surface preparation information.

Minimum recommended surface preparation:

* Iron & Steel:	SSPC-SP6/NACE 3
* Aluminum	SSPC-SP-1
* Galvanizing	SSPC-SP-1

* Primer required

TINTING

Tint Part A with 844 Colorant at 100% tint strength (white tint base and clear tint base only). Five minutes minimum mixing on a mechanical shaker is required for complete mixing of color

APPLICATION CONDITIONS

Temperature:	40°F minimum, 120°F maximum (air, surface, and material)
	At least 5°F above dew point
Relative humidity:	85% maximum

Refer to product Application Bulletin for detailed application information.

ORDERING INFORMATION

Packaging:

Part A:	1 gal
	~2 gal in a 3 gal container
Part B:	1/2 gal and 1 gal

Weight per gallon: 10.78 ± 0.2 lb mixed, may vary with color

SAFETY PRECAUTIONS

Refer to the MSDS sheet before use.

Published technical data and instructions are subject to change without notice. Contact your Sherwin-Williams representative for additional technical data and instructions.

DISCLAIMER

The information and recommendations set forth in this Product Data Sheet are based upon tests conducted by or on behalf of The Sherwin-Williams Company. Such information and recommendations set forth herein are subject to change and pertain to the product offered at the time of publication. Consult your Sherwin-Williams representative to obtain the most recent Product Data Information and Application Bulletin.

WARRANTY

The Sherwin-Williams Company warrants our products to be free of manufacturing defects in accord with applicable Sherwin-Williams quality control procedures. Liability for products proven defective, if any, is limited to replacement of the defective product or the refund of the purchase price paid for the defective product as determined by Sherwin-Williams. NO OTHER WARRANTY OR GUARANTEE OF ANY KIND IS MADE BY SHERWIN-WILLIAMS, EXPRESSED OR IMPLIED, STATUTORY, BY OPERATION OF LAW OR OTHERWISE, INCLUDING MERCHANTABILITY AND FITNESS FOR A PARTICULAR PURPOSE.

POLYLON HP POLYURETHANE

PART A B65-525 SERIES
PART B B65V525 HARDENER

APPLICATION BULLETIN

Revised 11/08

SURFACE PREPARATION

Surface must be clean, dry, and in sound condition. Remove all oil, dust, grease, dirt, loose rust, and other foreign material to ensure adequate adhesion.

Iron & Steel
Remove all oil and grease from surface by Solvent Cleaning per SSPC-SP1. Minimum surface preparation is Commercial Blast Cleaning per SSPC-SP6/NACE 3. For better performance, use Near White Metal Blast Cleaning per SSPC-SP10/NACE 2. Blast clean all surfaces using a sharp, angular abrasive for optimum surface profile (1-2 mils). Prime any bare steel the same day as it is cleaned or before flash rusting occurs. Primer Required.

Previously Painted Surfaces:
If in sound condition, clean the surface of all foreign material. Smooth, hard or glossy coatings and surfaces should be dulled by abrading the surface. Apply a test area, allowing paint to dry one week before testing adhesion. If adhesion is poor, or if this products attacks the previous finish, removal of the previous coating may be necessary. If paint is peeling or badly weathered, clean surface to sound substrate and treat as a new surface as above.

Galvanized Steel
Allow to weather a minimum of six months prior to coating. Solvent Clean per SSPC-SP1. When weathering is not possible, or the surface has been treated with chromates or silicates, first Solvent Clean per SSPC-SP1 and apply a test patch. Allow paint to dry at least one week before testing adhesion. If adhesion is poor, brush blasting per SSPC-SP7 is necessary to remove these treatments. Rusty galvanizing requires a minimum of Hand Tool Cleaning per SSPC-SP2, prime the area the same day as cleaned or before flash rusting occurs. Primer required.

Poured Concrete
New
For surface preparation, refer to SSPC-SP13/NACE 6, or ICRI 03732, CSP 1-3. Surfaces must be clean, dry, sound and offer sufficient profile to achieve adequate adhesion. Minimum substrate cure is 28 days at 75°F. Remove all form release agents, curing compounds, salts, efflorescence, laitance, and other foreign matter by sandblasting, shot-blasting, mechanical scarification, or suitable chemical means. Refer to ASTM D4260. Rinse thoroughly to achieve a final pH between 8.0 and 10.0. Allow to dry thoroughly prior to coating.
Old
Surface preparation is done in much the same manner as new concrete, however, if the concrete is contaminated with oils, grease, chemicals, etc., they must be removed by cleaning with a strong detergent. Refer to ASTM D4258. Form release agents, hardeners, etc. must be removed by sandblasting, shotblasting, mechanical scarification, or suitable chemical means. If surface deterioration presents an unacceptably rough surface, Kem Cati-Coat HS Epoxy Filler/Sealer is recommended to patch and resurface damaged concrete.
Fill all cracks, voids and bugholes with ArmorSeal Crack Filler.

Always follow the standard methods listed below:
ASTM D4258 Standard Practice for Cleaning Concrete.
ASTM D4259 Standard Practice for Abrading Concrete.
ASTM D4260 Standard Practice for Etching Concrete.
ASTM F1869 Standard Test Method for Measuring Moisture Vapor Emission Rate of Concrete.
SSPC-SP 13/Nace 6 Surface Preparation of Concrete.
ICRI 03732, Concrete Surface Preparation

APPLICATION CONDITIONS

Temperature:	40°F minimum, 120°F maximum (air, surface, and material) At least 5°F above dew point
Relative humidity:	85% maximum

APPLICATION EQUIPMENT

The following is a guide. Changes in pressures and tip sizes may be needed for proper spray characteristics. Always purge spray equipment before use with listed reducer. Any reduction must be compliant with existing VOC regulations and compatible with the existing environmental and application conditions.

Reducer .....Reducer #225, R7K225

Clean Up .....R6K30, MAK

Airless Spray
Pressure.....2400 - 3000 psi
Hose.....3/8" ID
Tip.....013" - .017"
Filter.....60 mesh
Reduction.....As needed up to 10% by volume

Conventional Spray
Gun.....Binks 95
Cap.....63P
Tip.....66
Atomization Pressure.....50 - 60 psi
Fluid Pressure.....20 - 30 psi
Reduction.....As needed up to 10% by volume

Brush
Brush.....Natural Bristle
Reduction.....As needed up to 10% by volume

Roller
Cover.....1/4" woven with phenolic core
Reduction.....As needed up to 10% by volume

If specific application equipment is not listed above, equivalent equipment may be substituted.

continued on back

Industrial & Marine Coatings

5.35A

POLYLON HP POLYURETHANE

PART A	B65-525	SERIES
PART B	B65V525	HARDENER

APPLICATION BULLETIN

APPLICATION PROCEDURES

Surface preparation must be completed as indicated.
Mix contents of each component thoroughly with power agitation. Make certain no pigment remains on the bottom of the can. Then combine two parts by volume of Part A with one part by volume of Part B. Thoroughly agitate the mixture with power agitation. Allow the material to sweat-in as indicated. Re-stir before using.
If reducer is used, add only after both components have been thoroughly mixed.

Apply paint at the recommended film thickness and spreading rate as indicated below:

Recommended Spreading Rate per coat:

Wet mils:	3.0 - 4.5
Dry mils:	2.0 - 3.0
Coverage:	380 - 570 sq ft/gal approximate

Drying Schedule @ 4.0 mils wet @ 50% RH:

	@50°F	@ 77°F	@100°F
To touch:	16 hours	2 hours	30 minutes
To handle:	24 hours	5 hours	2 hours
To recoat:			
minimum:	24 hours	12 hours	2 hours
maximum:	3 days	48 hours	24 hours
To cure:	7 days	7 days	5 days

If maximum recoat time is exceeded, abrade surface before recoating. Drying time is temperature, humidity, and film thickness dependent.

Pot Life:	5 hours	4 hours	45 minutes

Sweat-in-Time: None required

Application of coating above maximum or below minimum recommended spreading rate may adversely affect coating performance.

PERFORMANCE TIPS

Stripe coat all crevices, welds, and sharp angles to prevent early failure in these areas.

When using spray application, use a 50% overlap with each pass of the gun to avoid holidays, bare areas, and pinholes. If necessary, cross spray at a right angle.

Spreading rates are calculated on volume solids and do not include an application loss factor due to surface profile, roughness or porosity of the surface, skill and technique of the applicator, method of application, various surface irregularities, material lost during mixing, spillage, overthinning, climatic conditions, and excessive film build.

Excessive reduction of material can affect film build, appearance, and adhesion.

Do not apply the material beyond recommended pot life.

Do not mix previously catalyzed material with new.

In order to avoid blockage of spray equipment, clean equipment before use or before periods of extended downtime with Reducer #R6K30.

Mixed coating is sensitive to water. Use water traps in all air lines. Moisture contact can reduce pot life and affect gloss and color.

When rolling this product, always maintain a wet edge to avoid roller marks. Roll as close to any cut-in areas as possible to eliminate visual imperfections. Roller application must be from a roller tray, not by pouring the material onto the surface.

Refer to Product Information sheet for additional performance characteristics and properties.

CLEAN UP INSTRUCTIONS

Clean spills and spatters immediately with Reducer #R6K30. Clean tools immediately after use with Reducer #R6K30. Follow manufacturer's safety recommendations when using any solvent.

SAFETY PRECAUTIONS

Refer to the MSDS sheet before use.

Published technical data and instructions are subject to change without notice. Contact your Sherwin-Williams representative for additional technical data and instructions.

DISCLAIMER

The information and recommendations set forth in this Product Data Sheet are based upon tests conducted by or on behalf of The Sherwin-Williams Company. Such information and recommendations set forth herein are subject to change and pertain to the product offered at the time of publication. Consult your Sherwin-Williams representative to obtain the most recent Product Data Information and Application Bulletin.

WARRANTY

The Sherwin-Williams Company warrants our products to be free of manufacturing defects in accord with applicable Sherwin-Williams quality control procedures. Liability for products proven defective, if any, is limited to replacement of the defective product or the refund of the purchase price paid for the defective product as determined by Sherwin-Williams. NO OTHER WARRANTY OR GUARANTEE OF ANY KIND IS MADE BY SHERWIN-WILLIAMS, EXPRESSED OR IMPLIED, STATUTORY, BY OPERATION OF LAW OR OTHERWISE, INCLUDING MERCHANTABILITY AND FITNESS FOR A PARTICULAR PURPOSE.

MATERIAL SAFETY DATA SHEET

B65W525
04 00

DATE OF PREPARATION
Mar 25, 2009

SECTION 1 — PRODUCT AND COMPANY IDENTIFICATION

PRODUCT NUMBER
B65W525
PRODUCT NAME
POLY-LON® HP Polyester Polyurethane (Part A), Extra White
MANUFACTURER'S NAME
THE SHERWIN-WILLIAMS COMPANY
101 Prospect Avenue N.W.
Cleveland, OH 44115

Telephone Numbers and Websites

Product Information	www.sherwin-williams.com
Regulatory Information	(216) 566-2902 www.paintdocs.com
Medical Emergency	(216) 566-2917
Transportation Emergency*	(800) 424-9300
**for Chemical Emergency ONLY (spill, leak, fire, exposure, or accident)*	

SECTION 2 — COMPOSITION/INFORMATION ON INGREDIENTS

% by Weight	CAS Number	Ingredient	Units	Vapor Pressure
6	110-43-0	**Methyl n-Amyl Ketone**		
		ACGIH TLV	50 PPM	3.855 mm
		OSHA PEL	100 PPM	
10	123-86-4	**n-Butyl Acetate**		
		ACGIH TLV	150 PPM	10 mm
		ACGIH TLV	200 PPM STEL	
		OSHA PEL	150 PPM	
		OSHA PEL	200 PPM STEL	
4	108-65-6	**1-Methoxy-2-Propanol Acetate**		
		ACGIH TLV	Not Available	1.8 mm
		OSHA PEL	Not Available	
1	1332-58-7	**Kaolin**		
		ACGIH TLV	2 mg/m3 as Resp. Dust	
		OSHA PEL	10 mg/m3 Total Dust	
		OSHA PEL	5 mg/m3 Respirable Fraction	
17	13463-67-7	**Titanium Dioxide**		
		ACGIH TLV	10 mg/m3 as Dust	
		OSHA PEL	10 mg/m3 Total Dust	
		OSHA PEL	5 mg/m3 Respirable Fraction	

SECTION 3 — HAZARDS IDENTIFICATION

ROUTES OF EXPOSURE
INHALATION of vapor or spray mist.
EYE or SKIN contact with the product, vapor or spray mist.

HMIS Codes

Health	2*
Flammability	2
Reactivity	0

EFFECTS OF OVEREXPOSURE
EYES: Irritation.
SKIN: Prolonged or repeated exposure may cause irritation.
INHALATION: Irritation of the upper respiratory system.

May cause nervous system depression. Extreme overexposure may result in unconsciousness and possibly death.
Prolonged overexposure to solvent ingredients in Section 2 may cause adverse effects to the liver, urinary and blood forming systems.

SIGNS AND SYMPTOMS OF OVEREXPOSURE
Headache, dizziness, nausea, and loss of coordination are indications of excessive exposure to vapors or spray mists.
Redness and itching or burning sensation may indicate eye or excessive skin exposure.

MEDICAL CONDITIONS AGGRAVATED BY EXPOSURE

May cause allergic respiratory and/or skin reaction in susceptible persons or sensitization. This effect may be delayed several hours after exposure.

Persons sensitive to isocyanates will experience increased allergic reaction on repeated exposure.

CANCER INFORMATION

For complete discussion of toxicology data refer to Section 11.

SECTION 4 — FIRST AID MEASURES

EYES: Flush eyes with large amounts of water for 15 minutes. Get medical attention.

SKIN: Wash affected area thoroughly with soap and water.
Remove contaminated clothing and launder before re-use.

INHALATION: If any breathing problems occur during use, **LEAVE THE AREA** and get fresh air. If problems remain or occur later, **IMMEDIATELY** get medical attention.

INGESTION: Do not induce vomiting. Get medical attention immediately.

SECTION 5 — FIRE FIGHTING MEASURES

FLASH POINT	LEL	UEL	FLAMMABILITY CLASSIFICATION
102 °F PMCC	1.1	13.1	Combustible, Flash above 99 and below 200 °F

EXTINGUISHING MEDIA

Carbon Dioxide, Dry Chemical, Foam

UNUSUAL FIRE AND EXPLOSION HAZARDS

Closed containers may explode when exposed to extreme heat.
Application to hot surfaces requires special precautions.
During emergency conditions overexposure to decomposition products may cause a health hazard. Symptoms may not be immediately apparent. Obtain medical attention.

SPECIAL FIRE FIGHTING PROCEDURES

Full protective equipment including self-contained breathing apparatus should be used.
Water spray may be ineffective. If water is used, fog nozzles are preferable. Water may be used to cool closed containers to prevent pressure build-up and possible autoignition or explosion when exposed to extreme heat.

SECTION 6 — ACCIDENTAL RELEASE MEASURES

STEPS TO BE TAKEN IN CASE MATERIAL IS RELEASED OR SPILLED

- Remove all sources of ignition. Ventilate the area.
- Remove with inert absorbent.

SECTION 7 — HANDLING AND STORAGE

STORAGE CATEGORY

DOL Storage Class II

PRECAUTIONS TO BE TAKEN IN HANDLING AND STORAGE

Contents are COMBUSTIBLE. Keep away from heat and open flame.
Consult NFPA Code. Use approved Bonding and Grounding procedures.
Keep container closed when not in use. Transfer only to approved containers with complete and appropriate labeling. Do not take internally. Keep out of the reach of children.

SECTION 8 — EXPOSURE CONTROLS/PERSONAL PROTECTION

PRECAUTIONS TO BE TAKEN IN USE

NO PERSON SHOULD USE THIS PRODUCT, OR BE IN THE AREA WHERE IT IS BEING USED, IF THEY HAVE CHRONIC (LONG-TERM) LUNG OR BREATHING PROBLEMS OR IF THEY EVER HAD A REACTION TO ISOCYANATES.

Use only with adequate ventilation.
Avoid contact with skin and eyes. Avoid breathing vapor and spray mist.
Wash hands after using.
This coating may contain materials classified as nuisance particulates (listed "as Dust" in Section 2) which may be present at hazardous levels only during sanding or abrading of the dried film. If no specific dusts are listed in Section 2, the applicable limits for nuisance dusts are ACGIH TLV 10 mg/m3 (total dust), 3 mg/m3 (respirable fraction), OSHA PEL 15 mg/m3 (total dust), 5 mg/m3 (respirable fraction).

VENTILATION

Local exhaust preferable. General exhaust acceptable if the exposure to materials in Section 2 is maintained below applicable exposure limits. Refer to OSHA Standards 1910.94, 1910.107, 1910.108.

RESPIRATORY PROTECTION

Where overspray is present, a positive pressure air supplied respirator (TC19C NIOSH/MSHA approved) should be worn. If unavailable, a properly fitted organic vapor/particulate respirator approved by NIOSH/MSHA for protection against materials in Section 2 may be effective. Follow respirator manufacturers directions for use. Wear the respirator for the whole time of spraying and until all vapors and mists are gone. **NO PERSONS SHOULD BE ALLOWED IN THE AREA WHERE THIS PRODUCT IS BEING USED UNLESS EQUIPPED WITH THE SAME RESPIRATOR PROTECTION RECOMMENDED FOR THE PAINTERS.**

When sanding or abrading the dried film, wear a dust/mist respirator approved by NIOSH/MSHA for dust which may be generated from this product, underlying paint, or the abrasive.

PROTECTIVE GLOVES

To prevent skin contact, wear gloves which are recommended by glove supplier for protection against materials in Section 2.

EYE PROTECTION

Wear safety spectacles with unperforated sideshields.

OTHER PROTECTIVE EQUIPMENT

Use barrier cream on exposed skin.

OTHER PRECAUTIONS

This product must be mixed with other components before use. Before opening the packages, READ AND FOLLOW WARNING LABELS ON ALL COMPONENTS.

Intentional misuse by deliberately concentrating and inhaling the contents can be harmful or fatal.

SECTION 9 — PHYSICAL AND CHEMICAL PROPERTIES

PRODUCT WEIGHT	11.51 lb/gal	1379 g/l
SPECIFIC GRAVITY	1.39	
BOILING POINT	255 - 308 °F	123 - 153 °C
MELTING POINT	Not Available	
VOLATILE VOLUME	34%	
EVAPORATION RATE	Slower than ether	
VAPOR DENSITY	Heavier than air	
SOLUBILITY IN WATER	N.A.	

VOLATILE ORGANIC COMPOUNDS (VOC Theoretical - As Packaged)

2.49lb/gal	299g/l	Less Water and Federally Exempt Solvents
2.49lb/gal	299g/l	Emitted VOC

SECTION 10 — STABILITY AND REACTIVITY

STABILITY — Stable

CONDITIONS TO AVOID

None known.

INCOMPATIBILITY

None known.

HAZARDOUS DECOMPOSITION PRODUCTS

By fire: Carbon Dioxide, Carbon Monoxide

HAZARDOUS POLYMERIZATION

Will not occur

SECTION 11 — TOXICOLOGICAL INFORMATION

CHRONIC HEALTH HAZARDS

Reports have associated repeated and prolonged overexposure to solvents with permanent brain and nervous system damage.

IARC's Monograph No. 93 reports there is sufficient evidence of carcinogenicity in experimental rats exposed to titanium dioxide but inadequate evidence for carcinogenicity in humans and has assigned a Group 2B rating. In addition, the IARC summary concludes, "No significant exposure to titanium dioxide is thought to occur during the use of products in which titanium is bound to other materials, such as paint."

TOXICOLOGY DATA

CAS No.	Ingredient Name			
110-43-0	**Methyl n-Amyl Ketone**			
		LC50 RAT	4HR	Not Available
		LD50 RAT		1670 mg/kg
123-86-4	**n-Butyl Acetate**			
		LC50 RAT	4HR	2000 ppm
		LD50 RAT		13100 mg/kg
108-65-6	**1-Methoxy-2-Propanol Acetate**			
		LC50 RAT	4HR	Not Available
		LD50 RAT		8500 mg/kg
1332-58-7	**Kaolin**			
		LC50 RAT	4HR	Not Available
		LD50 RAT		Not Available
13463-67-7	**Titanium Dioxide**			
		LC50 RAT	4HR	Not Available
		LD50 RAT		Not Available

SECTION 12 — ECOLOGICAL INFORMATION

ECOTOXICOLOGICAL INFORMATION
No data available.

SECTION 13 — DISPOSAL CONSIDERATIONS

WASTE DISPOSAL METHOD
Waste from this product may be hazardous as defined under the Resource Conservation and Recovery Act (RCRA) 40 CFR 261.
Waste must be tested for ignitability to determine the applicable EPA hazardous waste numbers.
Incinerate in approved facility. Do not incinerate closed container. Dispose of in accordance with Federal, State/Provincial, and Local regulations regarding pollution.

SECTION 14 — TRANSPORT INFORMATION

US Ground (DOT)
May be Classed as a Combustible Liquid for U.S. Ground.
UN1263, PAINT, 3, PG III, (ERG#128)
DOT (Dept of Transportation) Hazardous Substances & Reportable Quantities
Xylenes (Isomers and mixture) 100 lb RQ
Bulk Containers may be Shipped as (check reportable quantities):
UN1263, PAINT, COMBUSTIBLE LIQUID, PG III, (ERG#128)
Canada (TDG)
May be Classed as a Combustible Liquid for Canadian Ground.
UN1263, PAINT, CLASS 3, PG III, (ERG#128)
IMO
UN1263, PAINT, CLASS 3, PG III, (39 C c.c.), EmS F-E, S-E

SECTION 15 — REGULATORY INFORMATION

SARA 313 *(40 CFR 372.65C)* SUPPLIER NOTIFICATION

CAS No.	CHEMICAL/COMPOUND	% by WT	% Element

No ingredients in this product are subject to SARA 313 (40 CFR 372.65C) Supplier Notification.
CALIFORNIA PROPOSITION 65
WARNING: This product contains chemicals known to the State of California to cause cancer and birth defects or other reproductive harm.
TSCA CERTIFICATION
All chemicals in this product are listed, or are exempt from listing, on the TSCA Inventory.

SECTION 16 — OTHER INFORMATION

This product has been classified in accordance with the hazard criteria of the Canadian Controlled Products Regulations (CPR) and the MSDS contains all of the information required by the CPR.

The above information pertains to this product as currently formulated, and is based on the information available at this time. Addition of reducers or other additives to this product may substantially alter the composition and hazards of the product. Since conditions of use are outside our control, we make no warranties, express or implied, and assume no liability in connection with any use of this information.

tobeywade
STRUCTURAL ENGINEERS

May 9, 2012
Project No. R115-12-12

Mr. Aubry Burgess
Plant Manager
PSC FERNLEY FACILITY
2095 Newlands Drive East
Fernley, NV 89408

RE: TANK T-2 CERTIFICATION

Dear Mr. Burgess:

In accordance with the Fernley Facility Amended Tank Replacement plan as prepared by PSC and dated March 25, 2008, each tank is required to be certified by Independent Registered Professional Engineers (IRPE's) prior to being placed into service. This letter has been prepared to document the evaluation of Tank T-2 as performed by Tobey-Wade Consulting.

Background

Tank T-2 is a structural steel tank with a working (design) capacity of 6,125 gallons. The tank has been designed in accordance with International Building Code (IBC) and American Institute of Steel Construction (AISC) requirements. The tank was fabricated by Peabody & Associates.

Infinity Corrosion Group, Inc. has evaluated the tank's suitability and compatibility for its proposed use in PSC's facility and has also certified the tank coating and lining systems. Their certifications have been provided under separate cover to PSC.

Findings

Based on our analysis, the following systems are hereby certified as being in compliance with the Amended Tank Replacement plan:

- Tank T-2 will have sufficient strength to contain the proposed waste materials without rupturing.
- Tank T-2 is situated on a reinforced concrete foundation system which is capable of adequately supporting the tank and its contents under static and dynamic conditions.

NEVADA OFFICE
320 FLINT STREET ■ RENO, NEVADA 89501 ■ TEL: (775) 324-3787 ■ FAX: (775) 324-3797

- Tank T-2 is located in an area with sufficient secondary containment as required by 40 CFR Ch. I, 264.193.
- Tank T-2 is stabile against overturning when subjected to loads based on 2006 International Building Code level seismic events.
- Tank T-2 is anchored to prevent sliding when subjected to loads based on 2006 International Building Code level seismic events. Structural Observation and Special Inspection of the anchorage system has been performed as required by the International Building Code. The Structural Observation and Special Inspection reports are attached.
- Tank T-2 has been tested for leakage and found to be watertight. The Tank Leakage Test results are included in the Tank Inspection Report, copy attached.
- The exterior of Tank T-2's shell wall has been inspected and found to be undamaged. The Tank Shell Inspection results are included in the Tank Inspection Report, copy attached.

Structural Observation, tank leakage and tank shell inspections were performed by Tobey-Wade Consulting, under my direct supervision. Special Inspections were performed by ICC-certified inspectors from Black Eagle Consulting based on anchorage requirements provided by Tobey-Wade Consulting.

Certification Statement

I certify under penalty of law that this report and all attachments were prepared under my direction and supervision in accordance with a system developed to assure that qualified personnel properly gather and evaluate the information submitted. Based on my inquiry of the person or persons who manage the system or those persons directly responsible for gathering the information, the information, submitted is, to the best of my knowledge and belief, true, accurate, and complete. I am aware that there are significant penalties for submitting false information, including the possibility of fines and imprisonment for knowing violations.

This report has been prepared in accordance with acceptable engineering practices and is subject to the assumptions and limitations stated in the report. Also note that this certification covers the aforementioned aspects of Tank T-2 only.

Please feel free to contact me at your convenience should you have any questions relating to our findings.

Sincerely,
TOBEY-WADE CONSULTING

Terrence R. Tobey

TERRENCE R. TOBEY, P.E., S.E.
Principal Structural Engineer

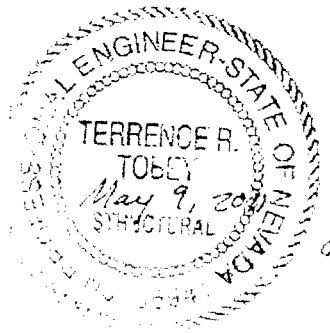

Exp. 6.30.12

SPECIAL INSPECTOR DAILY REPORT

Page___of___

BLACK EAGLE CONSULTING, INC.
GEOTECHNICAL AND CONSTRUCTION SERVICES
1345 Capital Blvd., Suite A, Reno, Nevada 89502-7140
Phone (775) 359-6600 Fax (775) 359-7766

Project: PSC Tank Replacement	Project No.: 560-03-1	Date: 3-29-12
Client: PSC	Contact: Aubrey Burgess	Total Hrs.: 2 1/2
Location: Fernley NV	Weather:	Temp.:
Contractor: L 3H	Contact: Alejandro	Stand By Hrs.:

Equipment in use:

Describe Inspections Made, Including Locations: Epoxy inspection of (15) #4 x 9 1/2" rebar into existing Tank T2 pad install, using Simpson XP ICC# ES-ESR 2508 exp 5/13. 4" minimum embedment obtained Epoxy used as per manufacturer's Recommendation's.

List Tests Made:

List Items Requiring Correction, Corrections of Previously Listed Items, and Previously Listed Uncorrected Items:

List Changes to Approved Plans Authorized by the Building Official and Architect or Engineer:

Comments: (4) Rebar Dowel's adjacent to (E) PCC stemwall located ≈ 2" from layout due to steel encountered in drilled hole's

Signed: [signature] Date: 3-29-12

Print Full Name: Daniel W [signature] I.D. Number: 0876922 [illegible]

Reviewed By [signature] Date

White to *Client* Canary to *Office File* Green to *Field File*

cc:

QA/QC SIDR # 4

DAILY FIELD REPORT

BLACK EAGLE CONSULTING, INC.
GEOTECHNICAL AND CONSTRUCTION SERVICES
1345 Capital Boulevard, Suite A
Reno, NV 89502-7140
Phone: (775) 359-6600
Fax: (775) 359-7766

Project: PSC Tank Replacements	Project Number: 0560-03-1	Date: 3-30-12
Client: PSC	Contact: Aubrey	Total Hrs.: 3.0
Location: Fernley	Weather: Clear	Temp:
Contractor: L & H Construction	Contact: Alejandro	Stand By Hrs.:

TYPE OF INSPECTION/TESTING

☐ Site Inspection	☒ Const. Materials Sampling
☒ Construction Observations	☐ Batch Plant Inspection
☐ Earthwork/Mass Grading	☐ Coring Asphalt/Concrete
☐ Footings/Foundations	☐ Bldg. Pad Certification
☐ Utilities (Gas, Elect, Wtr)	☒ Reinforcing Steel Insp.
☐ Aggregate Base	☐ Structural Welding/Bolting
☐ Asphalt Paving	☐ Masonry Inspection
☒ Portland Cement Concrete	☐ Fire Proofing Inspection
☐ Other	☐ Other

Equipment in use:

CONCRETE, MORTAR & GROUT TEST DATA

Set No.	1					
Mix No.						
Time a.m. p.m.	10:19					
Truck No.	81					
Amb. Temp °F	67*F					
Mix. Temp °F	83*F					
Slump, inches	6 ½"					
Air Content, %	6.2%					
Other						

Observations/Comments: Performed a visual reinforcing steel inspection prior to concrete placement for TS-2 tank pad. A bonding agent was applied inside the forms and reinforcing steel mat was placed with #4 bars at 18" O.C. E.W. Reinforcing steel was tied at a min of 50% No problems noted. Observed the placement of 3D concrete place approx. 5 yards for TS-2 Tank Pad. Concrete was placed by wheelbarrow. Sampling and testing was performed ref break sheets for additional info. No problems noted.

AB = Agg Base BS = Bedding Sand B = Below BG = Below Grade FG = Finished Grade FTG = Footing SF = Structural Fill SG = Subgrade SOG = Slab-on Grade

Reviewed By

Technician: Adam Hutchings

Report No.

© Black Eagle Consulting Inc. Reviewed Engineers analog 3.3) 12 PSC Concrete 3.30.12.doc

COMPRESSIVE STRENGTH TEST REPORT

REPORT TO:	Philip Services Corporation	PROJECT NAME:	PSC Tank Replacement PO 12103-2
	2095 Newlands Drive	PROJECT NO.:	0560-03-1
	Fernley, NV 89408	DATE SAMPLED:	March 30, 2012
ATTENTION:	Mr. Aubry Burgess	SAMPLED BY:	Adam Hutchings
STRUCTURE:	TS2 Tank Pad		
LOCATION IN STRUCTURE:	Center of Pad Bottom		

FIELD DATA

MATERIAL SAMPLED:	Portland Cement Concrete	SET NO:	1
CONTRACTOR:	L & H Concrete	TIME CAST:	10:19 AM
SUPPLIER:	3D Concrete	TRUCK NO:	81
MIX I.D. NO.:	1126RP	TICKET NO.:	16873
REQ. STRENGTH (28-DAY) psi:	4,000	MIX TEMPERATURE:	83 °F
ADMIXTURES:	A.E., 2 Gallons Plasticizer, Fibers	SLUMP:	6.5 in
CUBIC YARDS PLACED:	5	AIR CONTENT:	6.2 %
FIELD NOTES:		AMBIENT TEMPERATURE:	67 °F
REMARKS			

LABORATORY DATA

SAMPLE I.D.	8702	8703	8704	8705	8706
DATE TESTED:	4/6/2012	4/27/2012	4/27/2012	4/27/2012	
AGE, DAYS:	7	28	28	28	Hold
DIMENSION [dia. X ht.] (in):	4 X 8	4 X 8	4 X 8	4 X 8	
AREA, SQUARE (in^2):	12.57	12.57	12.57	12.57	
ULTIMATE LOAD (lbs)	58,770	73,210	74,650	73,990	Not Tested
TYPE OF FRACTURE: *	A	C	B	A	
COMPRESSIVE STRENGTH (psi)	4,680	5,830	5,940	5,890	
DATE RECEIVED:	4/3/12	CAPPING METHOD:	Neoprene Caps	AVERAGE 28-DAY STRENGTH (psi):	5,890
DISTRIBUTION:					

James Quinn - 3D Concrete (email)

Respectfully Submitted by:
Patrick A. Pilling, Ph.D., P.E., D.GE. - President

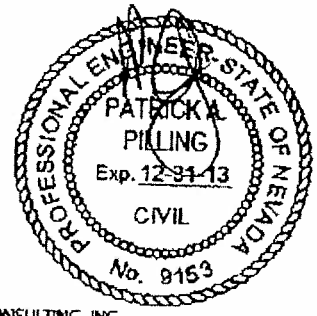

BLACK EAGLE CONSULTING, INC.
1345 Capital Boulevard, Suite A
Reno, Nevada 89502

4-27-12

*TYPES OF FRACTURES: A = CONE; B = CONE & SPLIT; C = CONE & SHEAR; D = SHEAR; E = COLUMNAR

TESTING AND SAMPLING WERE PERFORMED IN ACCORDANCE WITH ASTM C39, C78, C143, C172, C173, C231, AND C617 STANDARDS AS APPLICABLE

DAILY FIELD REPORT

Page___of___

BLACK EAGLE CONSULTING, INC.
GEOTECHNICAL AND CONSTRUCTION SERVICES
1345 Capital Blvd., Suite A, Reno, Nevada 89502-7140
Phone (775) 359-6600 Fax (775) 359-7766

Project: PSC Stabilization Area	Project No.: 560-021	Date: 4/03/12
Client: Philips Services Corporation	Contact: Aubry Burgess	Total Hrs.: 1 1/2
Location: Fernley	Weather: clear	Temp.: °F
Contractor: —	Contact: —	Stand By Hrs.:

TYPE OF INSPECTION/TESTING

☐ Site Inspection	☐ Const. Materials Sampling	
☐ Construction Observations	☐ Batch Plant Inspection	
☐ Earthwork/Mass Grading	☐ Coring Asphalt/Concrete	
☐ Footings/Foundations	☐ Bldg. Pad Certification	
☐ Utilities (Gas, Elect., Water)	☐ Reinforcing Steel Inspection	
☐ Aggregate Base	☐ Structural Welding/Bolting	
☐ Asphalt Paving	☐ Masonry Inspection	
☐ Portland Cement Concrete	☐ Fire Proofing Inspection	
☐ Other	☐ Other	

CONCRETE, GROUT, & MORTAR TEST DATA

Set No.						
Mix No.						
Time am. pm.						
Truck No.						
Amb.Temp. °F						
Mix Temp. °F						
Slump, inches						
Air Content, %						
Other						

Equipment in use:

Observations/Comments: Site visit to pick up a set of 6x cylinders that was cast on 3/30/12

AB=Agg.Base BS=Bedding Sand B=Below BG=Below Grade FG=Finish Grade FTG=Footing SF=Structural Fill SG=Subgrade SOG=Slab On Grade

Reviewed By _____ Technician Manuel Ruiz Report No. _____

White to *Office* Canary to *Field File* Green to *Personal File*

cc:

QA/QC DFR # 2

DAILY FIELD REPORT

BLACK EAGLE CONSULTING, INC.
GEOTECHNICAL AND CONSTRUCTION SERVICES
1345 Capital Boulevard, Suite A
Reno, NV 89502-7140
Phone: (775) 359-6600
Fax: (775) 359-7766

Project: 3 TANK Replacements	Project Number: 0560-03-1	Date: 3-23 + 3-30-12
Client: Philips Services	Contact: Aubry Burgress	Total Hrs.: 6
Location: Peabody INC	Weather:	Temp.:
Contractor:	Contact:	Stand By Hrs.:

TYPE OF INSPECTION/TESTING		CONCRETE, MORTAR & GROUT TEST DATA					
☐ Site Inspection	☐ Const. Materials Sampling	Set No.					
☐ Construction Observations	☐ Batch Plant Inspection	Mix No.					
☐ Earthwork/Mass Grading	☐ Coring Asphalt/Concrete	Time a.m. p.m.					
☐ Footings/Foundations	☐ Bldg. Pad Certification	Truck No.					
☐ Utilities (Gas, Elect, Wtr)	☐ Reinforcing Steel Insp.	Amb. Temp °F					
☐ Aggregate Base	☒ Structural Welding/Bolting	Mix. Temp °F					
☐ Asphalt Paving	☐ Masonry Inspection	Slump, inches					
☐ Portland Cement Concrete	☐ Fire Proofing Inspection	Air Content, %					
☐ Other	☐ Other	Other					

Equipment in use:

Observations/Comments:

Checked Welder Qualifications, Procedures And Fitup.

AB = Agg Base BS = Bedding Sand B = Below BG = Below Grade FG = Finished Grade FTG = Footing SF = Structural Fill SG = Subgrade SOG = Slab-on Grade

Reviewed By	Technician	Report No.

H:\Matrix\Forms\QC Field Report Template\daily\fieldrpt locked form new font.doc

DAILY FIELD REPORT

BLACK EAGLE CONSULTING, INC.
GEOTECHNICAL AND CONSTRUCTION SERVICES
1345 Capital Boulevard, Suite A
Reno, NV 89502-7140
Phone: (775) 359-6600
Fax: (775) 359-7766

Project: 3 Tank Replacements	Project Number: 0560-03-1	Date: 4-2 - 4/6
Client: Philips Services	Contact: Aubry Burgress	Total Hrs.: 12½ Hrs
Location: Peabody Inc	Weather:	Temp.:
Contractor:	Contact:	Stand By Hrs.:

TYPE OF INSPECTION/TESTING	
☐ Site Inspection	☐ Const. Materials Sampling
☐ Construction Observations	☐ Batch Plant Inspection
☐ Earthwork/Mass Grading	☐ Coring Asphalt/Concrete
☐ Footings/Foundations	☐ Bldg. Pad Certification
☐ Utilities (Gas, Elect, Wtr)	☐ Reinforcing Steel Insp.
☐ Aggregate Base	☒ Structural Welding/Bolting
☐ Asphalt Paving	☐ Masonry Inspection
☐ Portland Cement Concrete	☐ Fire Proofing Inspection
☐ Other	☐ Other

CONCRETE, MORTAR & GROUT TEST DATA					
Set No.					
Mix No.					
Time a.m. p.m.					
Truck No.					
Amb. Temp °F					
Mix. Temp °F					
Slump, inches					
Air Content, %					
Other					

Equipment in use:

Observations/Comments:

Went over welding specification and inspected weld quality, all is acceptable in accordance with AWS D1.1.

[signature]

AB = Agg Base BS = Bedding Sand B = Below BG = Below Grade FG = Finished Grade FTG = Footing SF = Structural Fill SG = Subgrade SOG = Slab-on Grade

Reviewed By [signature]	Technician	Report No.

DAILY FIELD REPORT

BLACK EAGLE CONSULTING, INC.
GEOTECHNICAL AND CONSTRUCTION SERVICES
1345 Capital Boulevard, Suite A
Reno, NV 89502-7140
Phone: (775) 359-6600
Fax: (775) 359-7766

Project: 3 TANK Replacements	Project Number: 0560-03-1	Date: 4/9 - 4/13/12
Client: Philips Services	Contact: Aubry Burgress	Total Hrs.: 15 1/2
Location: Peabody INC	Weather:	Temp.:
Contractor:	Contact:	Stand By Hrs.:

TYPE OF INSPECTION/TESTING		CONCRETE, MORTAR & GROUT TEST DATA					
☐ Site Inspection	☐ Const. Materials Sampling	Set No.					
☐ Construction Observations	☐ Batch Plant Inspection	Mix No.					
☐ Earthwork/Mass Grading	☐ Coring Asphalt/Concrete	Time a.m. p.m.					
☐ Footings/Foundations	☐ Bldg. Pad Certification	Truck No.					
☐ Utilities (Gas, Elect, Wtr)	☐ Reinforcing Steel Insp.	Amb. Temp °F					
☐ Aggregate Base	☐ Structural Welding/Bolting	Mix. Temp °F					
☐ Asphalt Paving	☐ Masonry Inspection	Slump, inches					
☐ Portland Cement Concrete	☐ Fire Proofing Inspection	Air Content, %					
☐ Other	☐ Other	Other					

Equipment in use:

Observations/Comments:

ALL welding is acceptable - to date. Two tank shells are complete.

AB = Agg Base BS = Bedding Sand B = Below BG = Below Grade FG = Finished Grade FTG = Footing SF = Structural Fill SG = Subgrade SOG = Slab-on Grade

Reviewed By:	Technician	Report No.

N:\Masters\Forms\QC Field Report Templates\daily\daily\ocbal form.new final.doc

DAILY FIELD REPORT

BLACK EAGLE CONSULTING, INC.
GEOTECHNICAL AND CONSTRUCTION SERVICES
1345 Capital Boulevard, Suite A
Reno, NV 89502-7140
Phone: (775) 359-6600
Fax: (775) 359-7766

Project: 3 Tank Replacements	Project Number: 0560-03-1	Date: 4/16 - 4/18
Client: Philips Services	Contact: Aubry Burgress	Total Hrs.: 8 1/2
Location: Peabody INC	Weather:	Temp.:
Contractor:	Contact:	Stand By Hrs.:

TYPE OF INSPECTION/TESTING	
☐ Site Inspection	☐ Const. Materials Sampling
☐ Construction Observations	☐ Batch Plant Inspection
☐ Earthwork/Mass Grading	☐ Coring Asphalt/Concrete
☐ Footings/Foundations	☐ Bldg. Pad Certification
☐ Utilities (Gas, Elect, Wtr)	☐ Reinforcing Steel Insp.
☐ Aggregate Base	☐ Structural Welding/Bolting
☐ Asphalt Paving	☐ Masonry Inspection
☐ Portland Cement Concrete	☐ Fire Proofing Inspection
☐ Other	☐ Other

CONCRETE, MORTAR & GROUT TEST DATA					
Set No.					
Mix No.					
Time a.m. p.m.					
Truck No.					
Amb. Temp °F					
Mix. Temp °F					
Slump, inches					
Air Content, %					
Other					

Equipment in use:

Observations/Comments:

Welding on third tank is complete and welding on the three lids are complete.

AB = Agg Base BS = Bedding Sand B = Below BG = Below Grade FG = Finished Grade FTG = Footing SF = Structural Fill SG = Subgrade SOG = Slab-on Grade

Reviewed By	Technician	Report No.

DAILY FIELD REPORT

BLACK EAGLE CONSULTING, INC.
GEOTECHNICAL AND CONSTRUCTION SERVICES
1345 Capital Boulevard, Suite A
Reno, NV 89502-7140
Phone: (775) 359-6600
Fax: (775) 359-7766

Project: 3 TANK Replacements	Project Number: 0560-03-1	Date: 4/18/12
Client: PHilips Services	Contact: Aubry Burgress	Total Hrs.:
Location: Peabody, INC	Weather:	Temp.:
Contractor:	Contact:	Stand By Hrs.:

TYPE OF INSPECTION/TESTING	
☐ Site Inspection	☐ Const. Materials Sampling
☐ Construction Observations	☐ Batch Plant Inspection
☐ Earthwork/Mass Grading	☐ Coring Asphalt/Concrete
☐ Footings/Foundations	☐ Bldg. Pad Certification
☐ Utilities (Gas, Elect, Wtr)	☐ Reinforcing Steel Insp.
☐ Aggregate Base	☒ Structural Welding/Bolting
☐ Asphalt Paving	☐ Masonry Inspection
☐ Portland Cement Concrete	☐ Fire Proofing Inspection
☐ Other	☐ Other

CONCRETE, MORTAR & GROUT TEST DATA					
Set No.					
Mix No.					
Time a.m. p.m.					
Truck No.					
Amb. Temp °F					
Mix. Temp °F					
Slump, inches					
Air Content, %					
Other					

Equipment in use:

Observations/Comments: From 3/23 thru 4/18 Peabody INC Fabricated 3 Replacement tanks For PHilips Services. The three tanks were Fabricated to plans and Specifications and all welding is in accordance with AWS D1.1.

AB = Agg Base BS = Bedding Sand B = Below BG = Below Grade FG = Finished Grade FTG = Footing SF = Structural Fill SG = Subgrade SOG = Slab-on Grade

Reviewed By	Technician	Report No.

SPECIAL INSPECTOR DAILY REPORT

Page___of___

BLACK EAGLE CONSULTING, INC.
GEOTECHNICAL AND CONSTRUCTION SERVICES
1345 Capital Blvd., Suite A, Reno, Nevada 89502-7140
Phone (775) 359-6600 Fax (775) 359-7766

Project: PSC	Project No.: 560-03-1	Date: 5-3-12
Client: PSC	Contact: Aubrey	Total Hrs.: 2½
Location: Fernley	Weather:	Temp.:
Contractor: Bragg Crane	Contact: Vic.	Stand By Hrs.:

Equipment in use:

Describe Inspections Made, Including Locations: Epoxy Inspection of ½" ø AH threaded for T2 AB's using Simpson XYP ICC ES ESR 2508 exp. 1-14 Epoxy used as per manufacturer's recommendations. A minimum of 4" embedment obtained.

List Tests Made:

List Items Requiring Correction, Corrections of Previously Listed Items, and Previously Listed Uncorrected Items:

List Changes to Approved Plans Authorized by the Building Official and Architect or Engineer:

Comments:

Signed: Daniel W McEwing Date: 5-3-12

Print Full Name: Daniel W McEwing I.D. Number: 0876922 89/84

Reviewed By: [illegible] Date: 5-8-12

White to Client Canary to Office File Green to Field File

cc:

QA/QC SIDR # 4

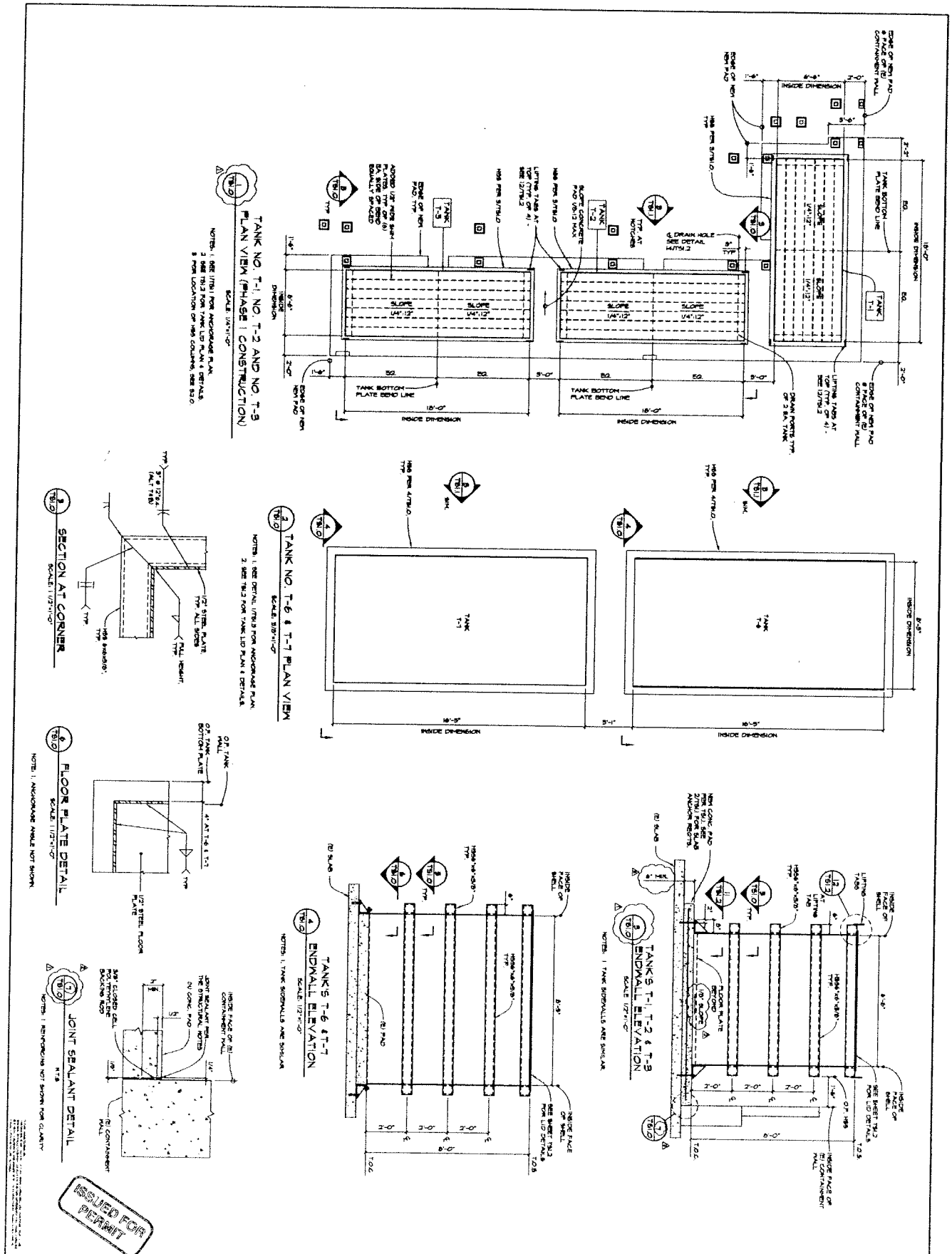

TANK NO.'s T-1 THRU T-3, T-6 & T-7 PLANS AND DETAILS

PSC FERNLEY - TANK REPLACEMENT PROJECT

PREPARED FOR

AUSENCO PSI

FERNLEY LYON COUNTY NEVADA

tobey wade
CONSULTING
329 Flint Street
Reno, Nevada 89501
Tel. (775) 324-7757 Fax (775) 324-7797

TS1.0

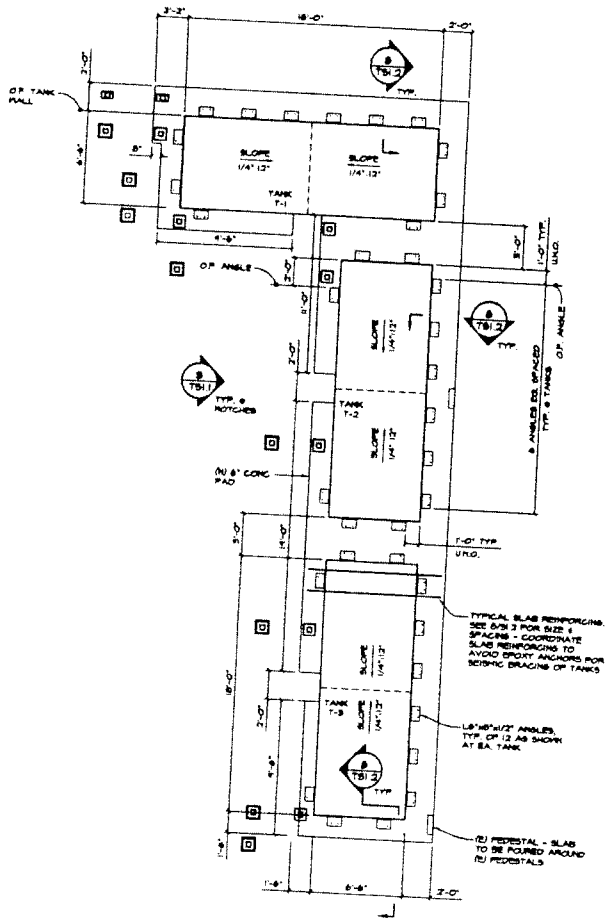

TANK NO. T-1, NO. T-2 AND NO. T-3 ANCHORAGE PLAN VIEW

SCALE: 1/4"=1'-0"

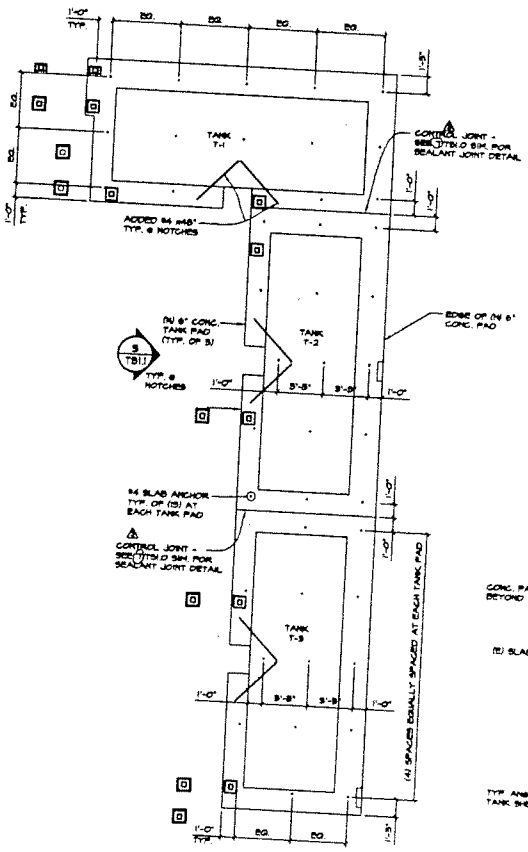

ANCHORAGE OF (N) CONC. PAD TO (E) CONC. SLAB

SCALE: 1/4"=1'-0"

NOTES: 1. SLAB ANCHOR LOCATIONS MAY BE ADJUSTED TO AVOID (E) REINFORCING. FILL ABANDONED HOLES W/ EPOXY.

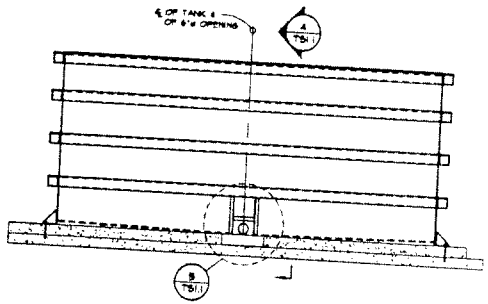

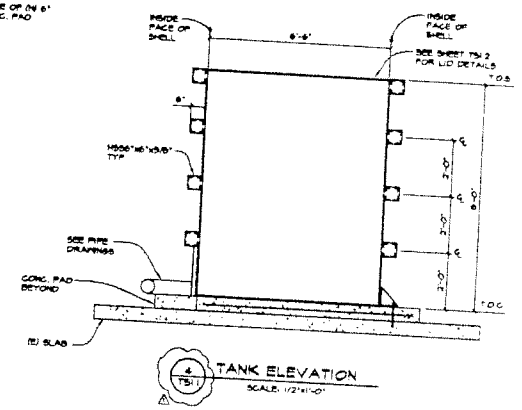

TANK ELEVATION

SCALE: 1/2"=1'-0"

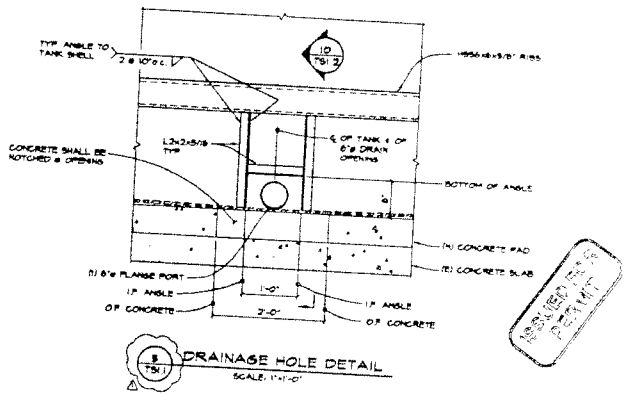

DRAINAGE HOLE DETAIL

SCALE: 1"=1'-0"

ISSUED FOR PERMIT

tobey wade
CONSULTING
329 Flint Street
Reno, Nevada 89501

TANK NO. T-1 THRU T-3 ANCHORAGE PLAN, TYPICAL SLAB REINFORCING DETAILS

PSC FERNLEY - TANK REPLACEMENT PROJECT

TS1.1

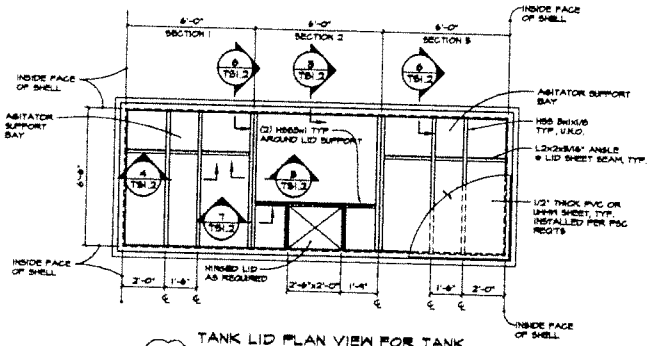

TANK LID PLAN VIEW FOR TANK NO. T-1, NO. T-2 & NO. T-3

SCALE: 3/8"=1'-0"

NOTES: 1. MOTOR WEIGHT SHALL NOT EXCEED 400 LBS.
2. THE LID FRAMING HAS BEEN DESIGNED FOR A LIVE LOAD = 20 psf.

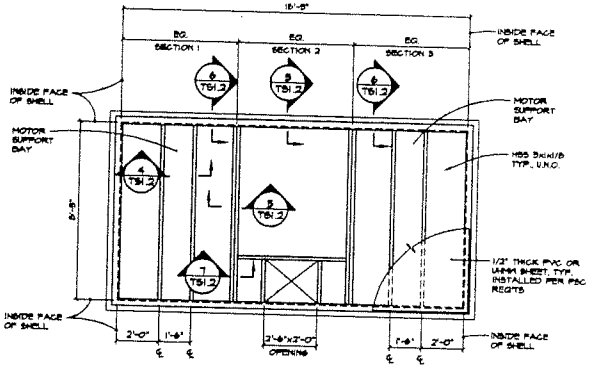

TANK LID PLAN VIEW FOR TANK NO. T-6 & NO. T-7

SCALE: 3/8"=1'-0"

NOTES: 1. MOTOR WEIGHT SHALL NOT EXCEED 400 LBS.
2. THE LID FRAMING HAS BEEN DESIGNED FOR A LIVE LOAD = 20 psf.

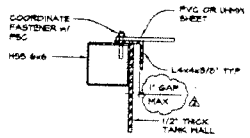

TYPICAL SECTION AT EDGE

SCALE: 1 1/2"=1'-0"

SECTION AT MOTOR SUPPORT

SCALE: 1 1/2"=1'-0"

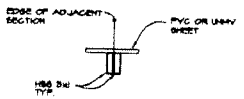

INTERIOR EDGE SUPPORT

SCALE: 1 1/2"=1'-0"

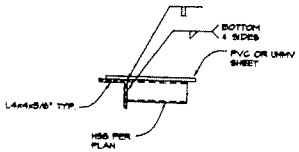

BEAM TO ANGLE CONNECTION

SCALE: 1 1/2"=1'-0"

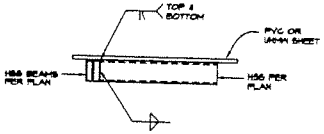

BEAM TO BEAM CONNECTION

SCALE: 1 1/2"=1'-0"

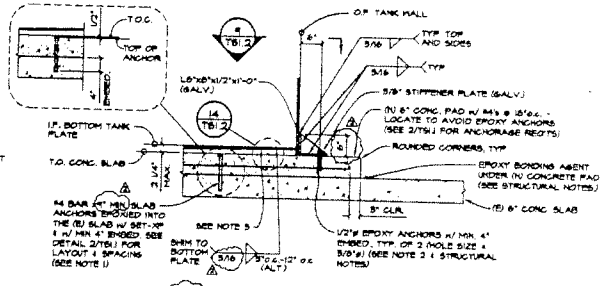

ANCHORAGE DETAIL

SCALE: 3/4"=1'-0"

NOTES: 1. SLAB ANCHORS SHALL HAVE PERIODIC INSPECTION.
2. EPOXY ANCHORS SHALL HAVE CONTINUOUS INSPECTION.
3. 1/2" PLATE SHIMS @ ± 12"o.c.

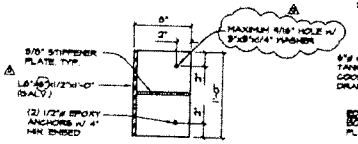

SECTION

SCALE: 1 1/2"=1'-0"

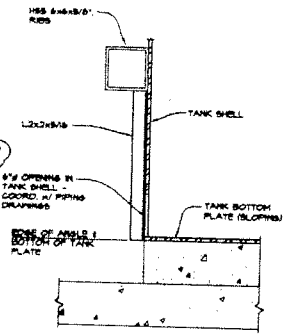

DRAINAGE HOLE DETAIL

SCALE: 1 1/2"=1'-0"

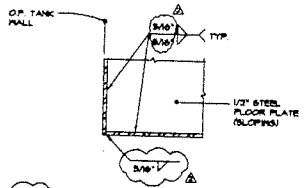

FLOOR PLATE DETAIL

SCALE: 1 1/2"=1'-0"

NOTE: 1. ANCHORAGE ANGLE NOT SHOWN FOR CLARITY.

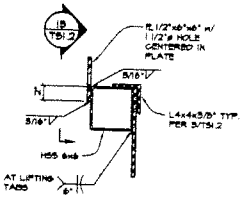

LIFTING TAB DETAIL

SCALE: 1 1/2"=1'-0"

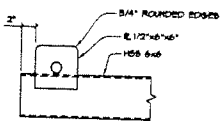

LIFTING TAB DETAIL

SCALE: 1 1/2"=1'-0"

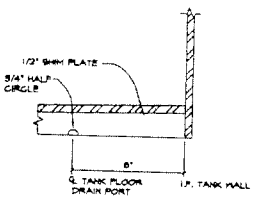

FLOOR PLATE DETAIL

SCALE: 3"=1'-0"

NOTE: 1. ANCHORAGE ANGLE NOT SHOWN FOR CLARITY.

ISSUED FOR PERMIT

tobey wade
CONSULTING
329 Flint Street
Reno, Nevada 89501
tel. (775) 324-7757 fax (775) 324-7797

PSC FERNLEY - TANK REPLACEMENT PROJECT

PREPARED FOR AUSENCO PSI

TANK NO.'S T-1 THRU T-3, T-6 & T-7 DETAILS

FERNLEY — LYON COUNTY — NEVADA

NO.	REVISIONS	BY
1	REVISED TANK T-1, T-2 & T-3 PLATE & ANCHORAGE 3/8/12	
2	CONSTRUCTION DRAWINGS 3/30/12	

EXPIRES: JUNE 15, 2012

JOB NO. 9371-01-01

DESIGNED T.A.T

DRAWN B.C.S.

CHKD

CHECKED

DATE OCT. 12, 2011

TS1.2

SHEET

tobeywade
STRUCTURAL ENGINEERS

October 4, 2012
Project No. R115-12-12

Mr. Larry Wilson
Regional General Manager
PSC FERNLEY FACILITY
2095 Newlands Drive East
Fernley, NV 89408

RE: INTERIM TANK T-2 CERTIFICATION

Dear Mr. Wilson:

In accordance with the PSC - Fernley Tank Replacement Project Three Phase Approach plan as prepared by PSC and dated April 18, 2012, each tank is required to be certified by Independent Registered Professional Engineers (IRPE's) prior to being placed into service. This letter has been prepared to document the evaluation of Tank T-2 as performed by Tobey-Wade Consulting.

Please note that the installation of Tank T-2 is being performed under Phase 1 of the three phases of construction. Tank T-2 will be serviced by temporary flexible piping attached to the process piping connection located at the bottom of the tank near its mid-point. The permanent process piping servicing Tank T-2 will be installed in Phase 3 as outlined in the above-referenced April 18, 2012 Three Phase Approach plan. Accordingly, this certification is being provided as an interim certification. Final certification of Tank T-2 will be provided after the permanent piping and all other associated permanent systems have been installed and inspected.

Background

Tank T-2 is a structural steel tank with a working (design) capacity of 6,125 gallons. The tank has been designed in accordance with International Building Code (IBC) and American Institute of Steel Construction (AISC) requirements. The tank was fabricated by Peabody & Associates.

Infinity Corrosion Group, Inc. has evaluated the tank's suitability and compatibility for its proposed use in PSC's facility and has also certified the tank coating and lining systems. Their certifications have been provided under separate cover to PSC.

NEVADA OFFICE
329 FLINT STREET ■ RENO, NEVADA 89501 ■ TEL: (775) 324.7757 ■ FAX: (775) 324.7797

Findings

Based on our analysis, the following systems are hereby certified as being in compliance with the Amended Tank Replacement plan:

- Tank T-2 will have sufficient strength to contain the proposed waste materials without rupturing.
- Tank T-2 is situated on a reinforced concrete foundation system which is capable of adequately supporting the tank and its contents under static and dynamic conditions.
- Tank T-2 is located in an area with sufficient secondary containment as required by 40 CFR Ch. I, 264.193.
- Tank T-2 is stabile against overturning when subjected to loads based on 2006 International Building Code level seismic events.
- Tank T-2 is anchored to prevent sliding when subjected to loads based on 2006 International Building Code level seismic events. Structural Observation and Special Inspection of the anchorage system has been performed as required by the International Building Code. The Structural Observation and Special Inspection reports are attached.
- Tank T-2 has been tested for leakage and found to be watertight. The Tank Leakage Test results are included in the Tank Inspection Report, copy attached.
- The exterior of Tank T-2's shell wall has been inspected and found to be undamaged. The Tank Shell Inspection results are included in the Tank Inspection Report, copy attached.
- The process piping connection has been inspected and found to be undamaged and with no evidence of leakage. The piping connection has adequate anchorage to prevent displacement during an earthquake. The associated process piping connection inspection form is attached.

Structural Observation, tank leakage and tank shell inspections were performed by Tobey-Wade Consulting, under my direct supervision. Special Inspections were performed by ICC-certified inspectors from Black Eagle Consulting based on anchorage requirements provided by Tobey-Wade Consulting.

Certification Statement

I certify under penalty of law that this report and all attachments were prepared under my direction and supervision in accordance with a system developed to assure that qualified personnel properly gather and evaluate the information submitted. Based on my inquiry of the person or persons who manage the system or those persons directly responsible for gathering the information, the information, submitted is, to the best of my knowledge and belief, true, accurate, and complete. I am aware that there are significant penalties for submitting false information, including the possibility of fines and imprisonment for knowing violations.

This report has been prepared in accordance with acceptable engineering practices and is subject to the assumptions and limitations stated in the report. Also note that this certification covers the aforementioned aspects of Tank T-2 only.

Please feel free to contact me at your convenience should you have any questions relating to our findings.

Sincerely,
TOBEY-WADE CONSULTING

Terrence R. Tobey

TERRENCE R. TOBEY, P.E., S.E.
Principal Structural Engineer

Exp.
6.30.12

TANK DATA SHEET

RCRA-Regulated? YES
Tank Location: DETOX ROOM
Tank Name: TREATMENT TANK
Tank Numbers: T - 1, T - 2, T - 3
Process Description: WASTE NEUTRALIZATION, TREATMENT
Vessel Fluid: AQUEOUS-BASED WASTE LIQUIDS
Specific Gravity: ≤ 1.50
Freeboard At Working Vol (ft^3): 1' – 0"
Normal Operating Pressure (psig): ATMOSPHERIC
Temperature (°F): AMBIENT

	Material	Thickness	Type
Bottom	CARBON STEEL PLATE	5/16" NOMINAL	FLAT
Shell	CARBON STEEL PLATE	5/16" NOMINAL	STRAIGHT
Roof	CARBON STEEL PLATE	¼" NOMINAL	FLAT, BOLTED

Working Volume (USG): 6,125 GALLONS
Nominal Volume (USG): 7,000 GALLONS
Tank I.D. (ft): 6'-6" x 18'-0"
Design Code Used: 2006 IBC
Insulation: NONE
Method of Construction: WELDED STEEL
Tank Height or Length (ft): 8' – 0"
Date in Service: PLANNED Tanks
Anchorage: BOLTED TO CONCRETE. Anchorage designs per 2006 IBC.

Connections

Item No.	Size (In.)	Gasket	Description
1	24"		ROOF MANWAY
2	4"		SIDE FLANGE NOZZLE
3	3"		FILL NOZZLE
4	8"		MIXER NOZZLE
5	4"		VENT FLANGE NOZZLE
6	4"		FLANGE ROOF NOZZLE
7	3"		FLANGE ROOF NOZZLE
8	2"		LEVEL SENSOR CONN.
9	1 ½"		FLANGE NOZZLES (3)
10			
11			
12			
13			
14			
15			

Tank Sketch

Interior Coating: POLYSPEC VINYL ESTER NOVOLAC SYSTEM.
Exterior Coating: BASECOAT EPOXY, TOPCOAT POLYURETHANE ENAMEL.
Tank Mfger: to be determined.

Remarks: Planned tanks for replacement of existing tanks T-1, T-2, and T-3.

TANK INSPECTION FORM

Philip Services Corporation / 21 EMI
PSC Fernley Facility
2095 Newlands Drive East
Fernley, NV 89408
(775)575-2760

TANK NO.: T-2

TANK SHELL INSPECTION

Date Inspected: May 4, 2012 10:15 am

Findings: Shell is in good condition, coated, no dings or deformations

TANK ANCHORAGE STRUCTURAL OBSERVATION

Type of Anchorage System: See Plans

Date Inspected: 5.4.12

# of Anchor Plates: 12

AB Type and Diameter: ½" ϕ

Plate Contact with Tank: NA

Special Inspection Completed? Yes

6" curb

11" edge dist. (min.)

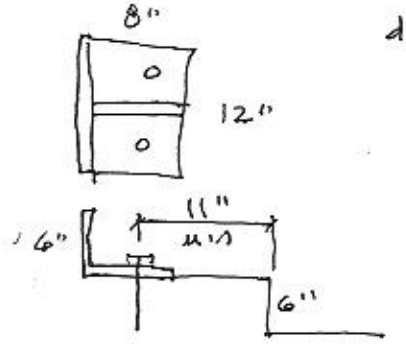

TANK LEAKAGE TEST

Date Filled: 5-4-12 Water Level below Inspection Hatch: 95/8" from top of TS

Date of Re-inspection: 5-7-12 Water Level below Inspection Hatch: 9 5/8" " "

Shell Leakage? No - 5.4.12 ; No - 5-7-12

Leakage on Floor/Drain Pan at Manifold? NA

INSPECTOR: Terrence Tobey DATE: May 4, 2012

INSPECTOR: [signature] DATE: May 7, 2012

TANK INSPECTION FORM

Philip Services Corporation / 21 EMI
PSC Fernley Facility
2095 Newlands Drive East
Fernley, NV 89408
(775)575-2760

TANK NO.: T-2

TANK SHELL INSPECTION Process Piping Connection

Date Inspected: 9/26/12

Findings: No Damage to Process Piping Connection Assembly or to Tank Shell. No Evidence of Leaks.

TANK ANCHORAGE STRUCTURAL OBSERVATION

Type of Anchorage System: N/A

Date Inspected:

# of Anchor Plates:

AB Type and Diameter:

Plate Contact with Tank:

Special Inspection Completed?

TANK LEAKAGE TEST N/A

Date Filled: Water Level below Inspection Hatch:

Date of Re-inspection: Water Level below Inspection Hatch:

Shell Leakage?

Leakage on Floor/Drain Pan at Manifold?

INSPECTOR: [signature] **DATE:** 9/26/12

INSPECTOR: _____ **DATE:** _____

SPECIAL INSPECTOR DAILY REPORT

Page___of___

BLACK EAGLE CONSULTING, INC.
GEOTECHNICAL AND CONSTRUCTION SERVICES
1345 Capital Blvd., Suite A, Reno, Nevada 89502-7140
Phone (775) 359-6600 Fax (775) 359-7766

Project: PSC Tank Replacement	Project No.: 560-03-1	Date: 3-29-12
Client: PSC	Contact: Aubrey Burgess	Total Hrs.: 2 1/2
Location: Fernley NV	Weather:	Temp.:
Contractor: L 3H	Contact: Alejandro	Stand By Hrs.:

Equipment in use:

Describe Inspections Made, Including Locations: Epoxy inspection of (15) #4 x 9 1/2" rebar into existing Tank T2 pad install, using Simpsox XP ICC # ES-ESR 2508 exp 5/13. 4" minimum embedment obtained Epoxy used as per manufacturer's Recommendation's.

List Tests Made:

List Items Requiring Correction, Corrections of Previously Listed Items, and Previously Listed Uncorrected Items:

List Changes to Approved Plans Authorized by the Building Official and Architect or Engineer:

Comments: (4) Rebar Dowel's adjacent to (E) PCC stemwall located ≈ 2" from layout due to steel encountered in drilled Hole's

Signed: Daniel W McE Date: 3-29-12

Print Full Name: Daniel W McEwan I.D. Number: 087692288/81

Reviewed By [signature] Date

White to *Client* Canary to *Office File* Green to *Field File*

cc:

QA/QC SIDR # 4

DAILY FIELD REPORT

BLACK EAGLE CONSULTING, INC.
GEOTECHNICAL AND CONSTRUCTION SERVICES
1345 Capital Boulevard, Suite A
Reno, NV 89502-7140
Phone: (775) 359-6600
Fax: (775) 359-7766

Project: PSC Tank Replacements	**Project Number: 0560-03-1**	**Date: 3-30-12**
Client: PSC	**Contact: Aubrey**	**Total Hrs.: 3.0**
Location: Fernley	**Weather: Clear**	**Temp:**
Contractor: L & H Construction	**Contact: Alejandro**	**Stand By Hrs.:**

TYPE OF INSPECTION/TESTING		CONCRETE, MORTAR & GROUT TEST DATA					
☐ Site Inspection	☒ Const. Materials Sampling	Set No.	1				
☒ Construction Observations	☐ Batch Plant Inspection	Mix No.					
☐ Earthwork/Mass Grading	☐ Coring Asphalt/Concrete	Time a.m. p.m.	10:19				
☐ Footings/Foundations	☐ Bldg. Pad Certification	Truck No.	81				
☐ Utilities (Gas, Elect, Wtr)	☒ Reinforcing Steel Insp.	Amb. Temp °F	67*F				
☐ Aggregate Base	☐ Structural Welding/Bolting	Mix. Temp °F	83*F				
☐ Asphalt Paving	☐ Masonry Inspection	Slump, inches	6 ½"				
☒ Portland Cement Concrete	☐ Fire Proofing Inspection	Air Content, %	6.2%				
☐ Other	☐ Other	Other					

Equipment in use:

Observations/Comments: Performed a visual reinforcing steel inspection prior to concrete placement for TS-2 tank pad. A bonding agent was applied inside the forms and reinforcing steel mat was placed with #4 bars at 18" O.C. E.W. Reinforcing steel was tied at a min of 50% No problems noted. Observed the placement of 3D concrete place approx. 5 yards for TS-2 Tank Pad. Concrete was placed by wheelbarrow. Sampling and testing was performed ref break sheets for additional info. No problems noted.

AB = Agg Base BS = Bedding Sand B = Below BG = Below Grade FG = Finished Grade FTG = Footing SF = Structural Fill SG = Subgrade SOG = Slab-on Grade

Reviewed By	Technician: Adam Hutchings	Report No.

COMPRESSIVE STRENGTH TEST REPORT

REPORT TO:	Philip Services Corporation	PROJECT NAME:	PSC Tank Replacement PO 12103-2
	2095 Newlands Drive	PROJECT NO.:	0560-03-1
	Fernley, NV 89408	DATE SAMPLED:	March 30, 2012
ATTENTION:	Mr. Aubry Burgess	SAMPLED BY:	Adam Hutchings
STRUCTURE:	TS2 Tank Pad		
LOCATION IN STRUCTURE:	Center of Pad Bottom		

FIELD DATA

MATERIAL SAMPLED:	Portland Cement Concrete	SET NO:	1
CONTRACTOR:	L & H Concrete	TIME CAST:	10:19 AM
SUPPLIER:	3D Concrete	TRUCK NO:	81
MIX I.D. NO.:	1126RP	TICKET NO.:	16873
REQ. STRENGTH (28-DAY) psi:	4,000	MIX TEMPERATURE:	83 °F
ADMIXTURES:	A.E., 2 Gallons Plasticizer, Fibers	SLUMP:	6.5 in
CUBIC YARDS PLACED:	5	AIR CONTENT:	6.2 %
FIELD NOTES:		AMBIENT TEMPERATURE:	67 °F
REMARKS			

LABORATORY DATA

SAMPLE I.D.	8702	8703	8704	8705	8706
DATE TESTED:	4/6/2012	4/27/2012	4/27/2012	4/27/2012	
AGE, DAYS:	7	28	28	28	Hold
DIMENSION [dia. X ht.] (in):	4 X 8	4 X 8	4 X 8	4 X 8	
AREA, SQUARE (in^2):	12.57	12.57	12.57	12.57	
ULTIMATE LOAD (lbs)	58,770	73,210	74,650	73,990	Not Tested
TYPE OF FRACTURE: *	A	C	B	A	
COMPRESSIVE STRENGTH (psi)	4,680	5,830	5,940	5,890	

DATE RECEIVED:	4/3/12	CAPPING METHOD:	Neoprene Caps	AVERAGE 28-DAY STRENGTH (psi):	5,890

DISTRIBUTION:

James Quinn - 3D Concrete (email)

Respectfully Submitted by:
Patrick A. Pilling, Ph.D., P.E., D.GE. - President

BLACK EAGLE CONSULTING, INC.
1345 Capital Boulevard, Suite A
Reno, Nevada 89502

4-27-12

*TYPES OF FRACTURES: A = CONE; B = CONE & SPLIT; C = CONE & SHEAR; D = SHEAR; E = COLUMNAR

TESTING AND SAMPLING WERE PERFORMED IN ACCORDANCE WITH ASTM C39, C78, C143, C172, C173, C231, AND C617 STANDARDS AS APPLICABLE

DAILY FIELD REPORT

Page___of___

BLACK EAGLE CONSULTING, INC.

GEOTECHNICAL AND CONSTRUCTION SERVICES

1345 Capital Blvd., Suite A, Reno, Nevada 89502-7140

Phone (775) 359-6600 Fax (775) 359-7766

Project: PSC Stabilization Area	Project No.: 560-021	Date: 4/02/12
Client: Philips Services Corporation	Contact: Aubry Burgess	Total Hrs.: 1 1/2
Location: Fernley	Weather: clear	Temp.: °F
Contractor: —	Contact: —	Stand By Hrs.:

TYPE OF INSPECTION/TESTING				CONCRETE, GROUT, & MORTAR TEST DATA						
	Site Inspection		Const. Materials Sampling	Set No.						
	Construction Observations		Batch Plant Inspection	Mix No.						
	Earthwork/Mass Grading		Coring Asphalt/Concrete	Time am. pm.						
	Footings/Foundations		Bldg. Pad Certification	Truck No.						
	Utilities (Gas, Elect., Water)		Reinforcing Steel Inspection	Amb.Temp. °F						
	Aggregate Base		Structural Welding/Bolting	Mix Temp. °F						
	Asphalt Paving		Masonry Inspection	Slump, inches						
	Portland Cement Concrete		Fire Proofing Inspection	Air Content, %						
	Other		Other	Other						

Equipment in use:

Observations/Comments: Site visit to pick up a set of five cylinders that was cast on 3/30/12

AB=Agg.Base **BS**=Bedding Sand **B**=Below **BG**=Below Grade **FG**=Finish Grade **FTG**=Footing **SF**=Structural Fill **SG**=Subgrade **SOG**=Slab On Grade

Reviewed By _____ Technician Manuel Ruiz Report No.___

White to ***Office*** Canary to ***Field File*** Green to ***Personal File***

cc:

QA/QC DFR # 2

DAILY FIELD REPORT

BLACK EAGLE CONSULTING, INC.
GEOTECHNICAL AND CONSTRUCTION SERVICES
1345 Capital Boulevard, Suite A
Reno, NV 89502-7140
Phone: (775) 359-6600
Fax: (775) 359-7766

Project: 3 TANK REPLACEMENTS	Project Number: 0560-03-1	Date: 3-23 + 3-30-12
Client: PHILIPS SERVICES	Contact: Aubry Burgess	Total Hrs.: 6
Location: Peabody INC	Weather:	Temp.:
Contractor:	Contact:	Stand By Hrs.:

TYPE OF INSPECTION/TESTING		CONCRETE, MORTAR & GROUT TEST DATA						
☐ Site Inspection	☐ Const. Materials Sampling	Set No.						
☐ Construction Observations	☐ Batch Plant Inspection	Mix No.						
☐ Earthwork/Mass Grading	☐ Coring Asphalt/Concrete	Time a.m. p.m.						
☐ Footings/Foundations	☐ Bldg. Pad Certification	Truck No.						
☐ Utilities (Gas, Elect, Wtr)	☐ Reinforcing Steel Insp.	Amb. Temp °F						
☐ Aggregate Base	☒ Structural Welding/Bolting	Mix. Temp °F						
☐ Asphalt Paving	☐ Masonry Inspection	Slump, inches						
☐ Portland Cement Concrete	☐ Fire Proofing Inspection	Air Content, %						
☐ Other	☐ Other	Other						

Equipment in use:

Observations/Comments:

CHECKED WELDER QUALIFICATIONS, PROCEDURES AND FITUP.

AB = Agg Base BS = Bedding Sand B = Below BG = Below Grade FG = Finished Grade FTG = Footing SF = Structural Fill SG = Subgrade SOG = Slab-on Grade

Reviewed By	Technician	Report No.

DAILY FIELD REPORT

BLACK EAGLE CONSULTING, INC.
GEOTECHNICAL AND CONSTRUCTION SERVICES
1345 Capital Boulevard, Suite A
Reno, NV 89502-7140
Phone: (775) 359-6600
Fax: (775) 359-7766

Project: 3 TANK Replacements	Project Number: 0560-03-1	Date: 4-2 - 4/6
Client: PHILIPS Services	Contact: Aubry Burgess	Total Hrs.: 12½ Hrs
Location: Peabody INC	Weather:	Temp.:
Contractor:	Contact:	Stand By Hrs.:

TYPE OF INSPECTION/TESTING		CONCRETE, MORTAR & GROUT TEST DATA						
☐ Site Inspection	☐ Const. Materials Sampling	Set No.						
☐ Construction Observations	☐ Batch Plant Inspection	Mix No.						
☐ Earthwork/Mass Grading	☐ Coring Asphalt/Concrete	Time a.m. p.m.						
☐ Footings/Foundations	☐ Bldg. Pad Certification	Truck No.						
☐ Utilities (Gas, Elect, Wtr)	☐ Reinforcing Steel Insp.	Amb. Temp °F						
☐ Aggregate Base	☒ Structural Welding/Bolting	Mix. Temp °F						
☐ Asphalt Paving	☐ Masonry Inspection	Slump, inches						
☐ Portland Cement Concrete	☐ Fire Proofing Inspection	Air Content, %						
☐ Other	☐ Other	Other						

Equipment in use:

Observations/Comments:

Went over welding specification and inspected weld quality, ALL IS acceptable in accordance with AWS D1.1.

AB = Agg Base BS = Bedding Sand B = Below BG = Below Grade FG = Finished Grade FTG = Footing SF = Structural Fill SG = Subgrade SOG = Slab-on Grade

Reviewed By	Technician	Report No.

DAILY FIELD REPORT

BLACK EAGLE CONSULTING, INC.
GEOTECHNICAL AND CONSTRUCTION SERVICES
1345 Capital Boulevard, Suite A
Reno, NV 89502-7140
Phone: (775) 359-6600
Fax: (775) 359-7766

Project: 3 TANK Replacement S	Project Number: 0560-03-1	Date: 4/9 - 4/13/12
Client: Philips Services	Contact: Aubry Burgess	Total Hrs.: 15 1/2
Location: Peabody INC	Weather:	Temp.:
Contractor:	Contact:	Stand By Hrs.:

TYPE OF INSPECTION/TESTING		CONCRETE, MORTAR & GROUT TEST DATA						
☐ Site Inspection	☐ Const. Materials Sampling	Set No.						
☐ Construction Observations	☐ Batch Plant Inspection	Mix No.						
☐ Earthwork/Mass Grading	☐ Coring Asphalt/Concrete	Time a.m. p.m.						
☐ Footings/Foundations	☐ Bldg. Pad Certification	Truck No.						
☐ Utilities (Gas, Elect, Wtr)	☐ Reinforcing Steel Insp.	Amb. Temp °F						
☐ Aggregate Base	☐ Structural Welding/Bolting	Mix. Temp °F						
☐ Asphalt Paving	☐ Masonry Inspection	Slump, inches						
☐ Portland Cement Concrete	☐ Fire Proofing Inspection	Air Content, %						
☐ Other	☐ Other	Other						

Equipment in use:

Observations/Comments:

ALL welding is acceptable - to date.
Two tank shells are complete.

AB = Agg Base BS = Bedding Sand B = Below BG = Below Grade FG = Finished Grade FTG = Footing SF = Structural Fill SG = Subgrade SOG = Slab-on Grade

Reviewed By	Technician	Report No.

DAILY FIELD REPORT

Page 1 of 1

BLACK EAGLE CONSULTING, INC.
GEOTECHNICAL AND CONSTRUCTION SERVICES
1345 Capital Boulevard, Suite A
Reno, NV 89502-7140
Phone: (775) 359-6600
Fax: (775) 359-7766

Project: 3 Tank Replacements	Project Number: 0560-03-1	Date: 4/16 - 4/18
Client: Phillips Services	Contact: Aubry Burgess	Total Hrs.: 8 1/2
Location: Peabody ENC	Weather:	Temp.:
Contractor:	Contact:	Stand By Hrs.:

TYPE OF INSPECTION/TESTING		CONCRETE, MORTAR & GROUT TEST DATA					
☐ Site Inspection	☐ Const. Materials Sampling	Set No.					
☐ Construction Observations	☐ Batch Plant Inspection	Mix No.					
☐ Earthwork/Mass Grading	☐ Coring Asphalt/Concrete	Time a.m. p.m.					
☐ Footings/Foundations	☐ Bldg. Pad Certification	Truck No.					
☐ Utilities (Gas, Elect, Wtr)	☐ Reinforcing Steel Insp.	Amb. Temp °F					
☐ Aggregate Base	☐ Structural Welding/Bolting	Mix. Temp °F					
☐ Asphalt Paving	☐ Masonry Inspection	Slump, inches					
☐ Portland Cement Concrete	☐ Fire Proofing Inspection	Air Content, %					
☐ Other	☐ Other	Other					

Equipment in use:

Observations/Comments:

welding on third tank is complete and welding on the three lids are complete.

AB = Agg Base BS = Bedding Sand B = Below BG = Below Grade FG = Finished Grade FTG = Footing SF = Structural Fill SG = Subgrade SOG = Slab-on Grade

Reviewed By	Technician	Report No.

DAILY FIELD REPORT

BLACK EAGLE CONSULTING, INC.
GEOTECHNICAL AND CONSTRUCTION SERVICES
1345 Capital Boulevard, Suite A
Reno, NV 89502-7140
Phone: (775) 359-6600
Fax: (775) 359-7766

Project: 3 TANK REPLACEMENTS	Project Number: 0560-03-1	Date: 4/18/12
Client: PHilips Services	Contact: Aubry Burgress	Total Hrs.:
Location: Peabody, INC	Weather:	Temp.:
Contractor:	Contact:	Stand By Hrs.:

TYPE OF INSPECTION/TESTING		CONCRETE, MORTAR & GROUT TEST DATA					
☐ Site Inspection	☐ Const. Materials Sampling	Set No.					
☐ Construction Observations	☐ Batch Plant Inspection	Mix No.					
☐ Earthwork/Mass Grading	☐ Coring Asphalt/Concrete	Time a.m. p.m.					
☐ Footings/Foundations	☐ Bldg. Pad Certification	Truck No.					
☐ Utilities (Gas, Elect, Wtr)	☐ Reinforcing Steel Insp.	Amb. Temp °F					
☐ Aggregate Base	☒ Structural Welding/Bolting	Mix. Temp °F					
☐ Asphalt Paving	☐ Masonry Inspection	Slump, inches					
☐ Portland Cement Concrete	☐ Fire Proofing Inspection	Air Content, %					
☐ Other	☐ Other	Other					

Equipment in use:

Observations/Comments: From 3/23 thru 4/18 Peabody INC Fabricated 3 Replacement tanks For PHilips Services. The three tanks were Fabricated to plans and Specifications and all welding is in accordance with AWS D1.1.

AB = Agg Base BS = Bedding Sand B = Below BG = Below Grade FG = Finished Grade FTG = Footing SF = Structural Fill SG = Subgrade SOG = Slab-on Grade

Reviewed By	Technician	Report No.

SPECIAL INSPECTOR DAILY REPORT

Page___of___

BLACK EAGLE CONSULTING, INC.
GEOTECHNICAL AND CONSTRUCTION SERVICES
1345 Capital Blvd., Suite A, Reno, Nevada 89502-7140
Phone (775) 359-6600 Fax (775) 359-7766

Project: PSC	Project No.: 560-03-1	Date: 5-3-12
Client: PSC	Contact: Aubrey	Total Hrs.: 2½
Location: Fernley	Weather:	Temp.:
Contractor: Bragg Crane	Contact: Vic	Stand By Hrs.:

Equipment in use:

Describe Inspections Made, Including Locations: Epoxy Inspection of ½" ø All thread for T2 AB's using Simpson XP ICC ES ESR 2508 Exp. 1-14 Epoxy used as per manufacturer's Recommendation's. A minimum of 4" embedment obtained.

List Tests Made:

List Items Requiring Correction, Corrections of Previously Listed Items, and Previously Listed Uncorrected Items:

List Changes to Approved Plans Authorized by the Building Official and Architect or Engineer:

Comments:

Signed: Daniel W McEwing Date: 5-3-12

Print Full Name: Daniel W McEwing I.D. Number: 0876922 89/84

Reviewed By [signature] Date 5-8-12

White to *Client* Canary to *Office File* Green to *Field File*

cc:

QA/QC SIDR # 4

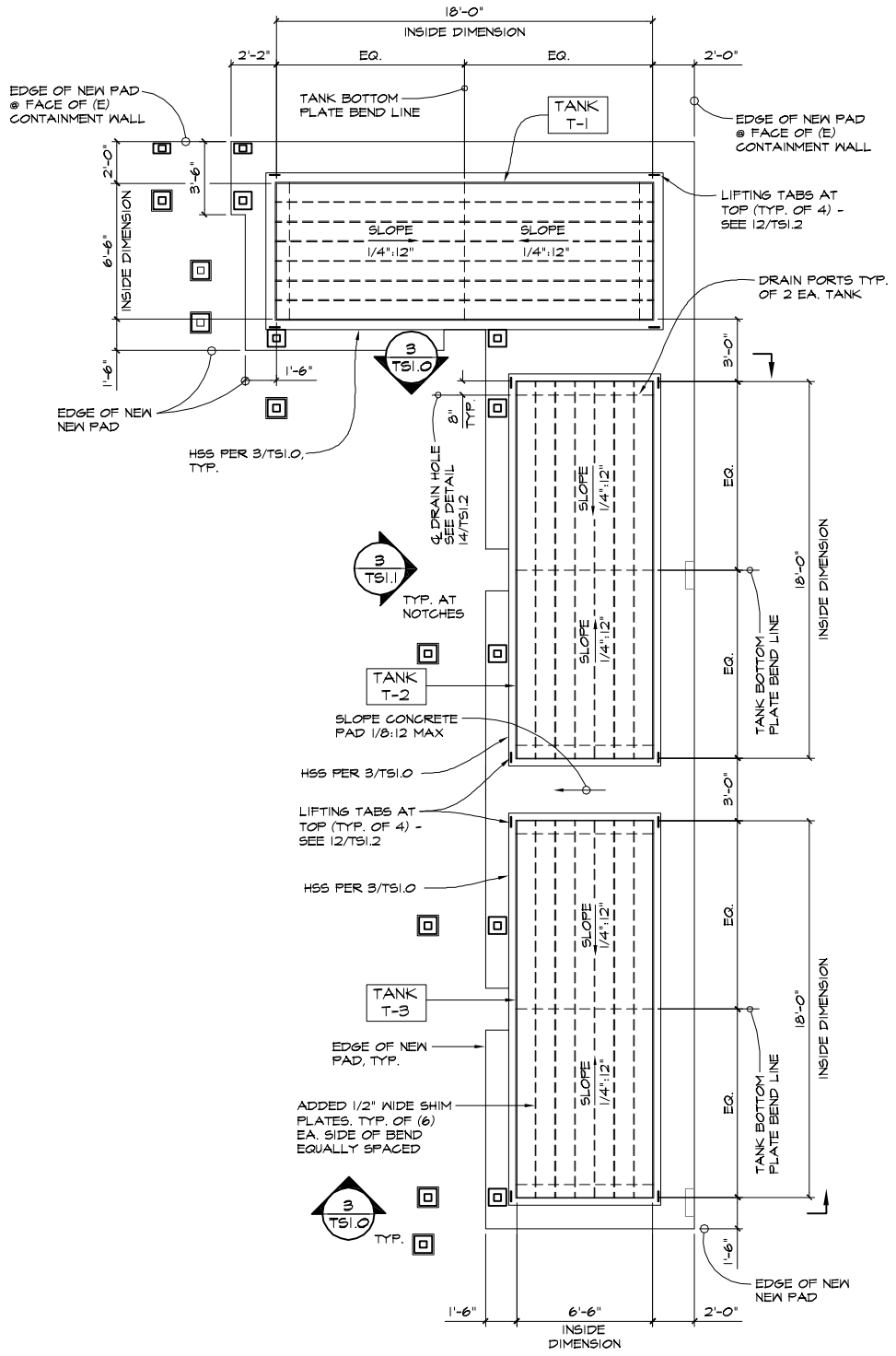

TANK NO. T-1, NO. T-2 AND NO. T-3 PLAN VIEW (PHASE 1 CONSTRUCTION)

1 TS1.0

SCALE: 1/4"=1'-0"

NOTES: 1. SEE 1/TS1.1 FOR ANCHORAGE PLAN.
2. SEE TS1.2 FOR TANK LID PLAN & DETAILS.
3. FOR LOCATION OF HSS COLUMNS, SEE S2.0.

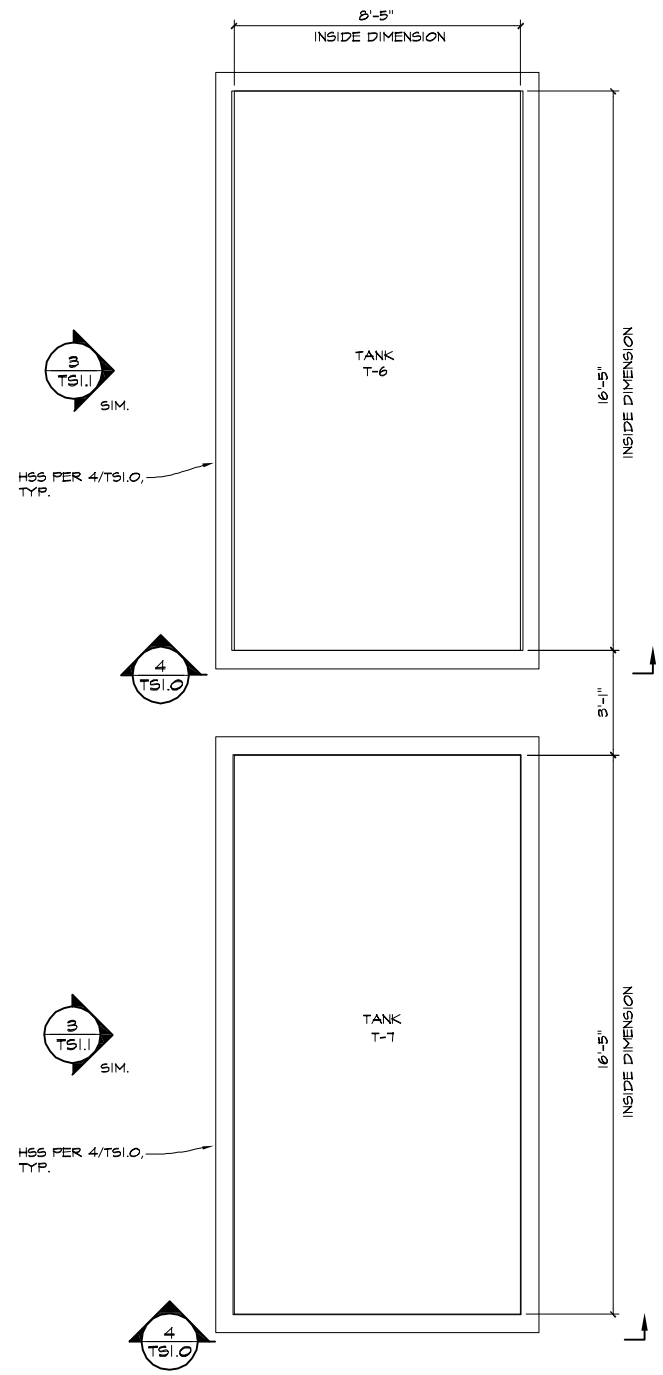

TANK NO. T-6 & T-7 PLAN VIEW

2 TS1.0

SCALE: 3/8"=1'-0"

NOTES: 1. SEE DETAIL 1/TS1.3 FOR ANCHORAGE PLAN.
2. SEE TS1.2 FOR TANK LID PLAN & DETAILS.

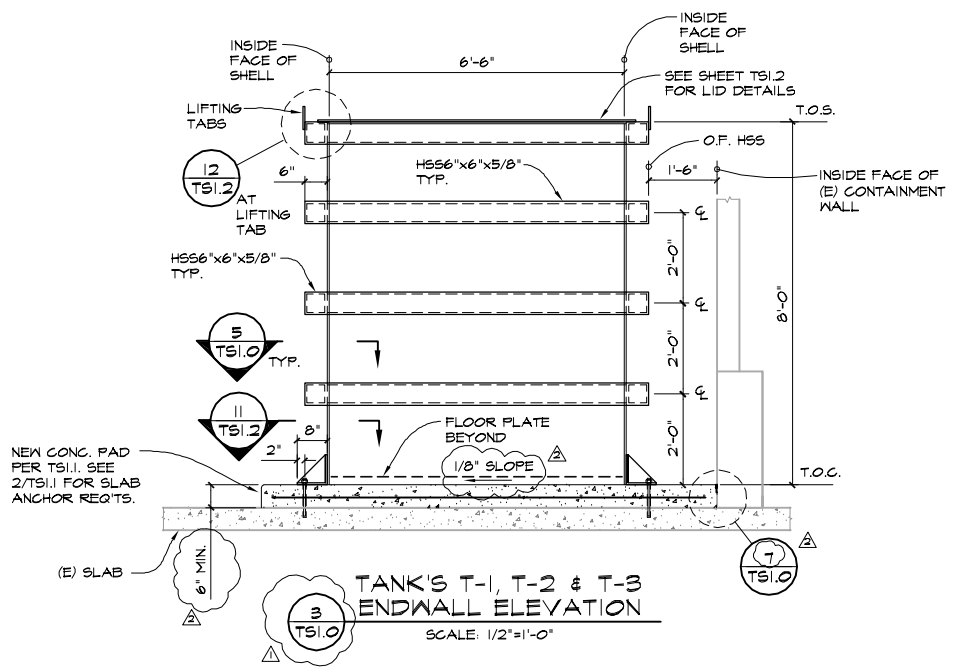

TANK'S T-1, T-2 & T-3 ENDWALL ELEVATION

3 TS1.0

SCALE: 1/2"=1'-0"

NOTES: 1. TANK SIDEWALLS ARE SIMILAR.

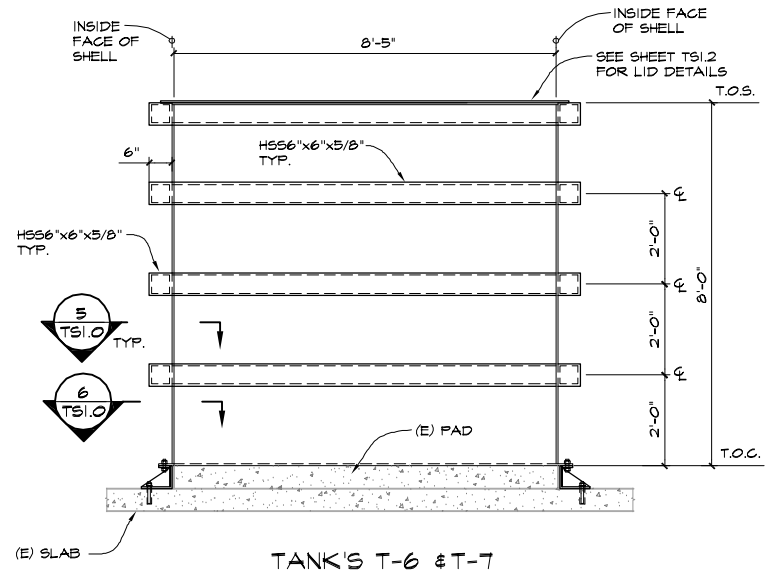

TANK'S T-6 & T-7 ENDWALL ELEVATION

4 TS1.0

SCALE: 1/2"=1'-0"

NOTES: 1. TANK SIDEWALLS ARE SIMILAR.

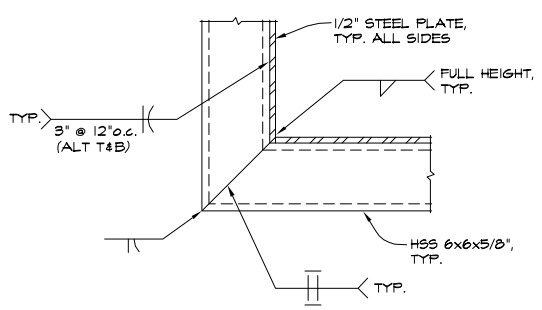

SECTION AT CORNER

5 TS1.0

SCALE: 1 1/2"=1'-0"

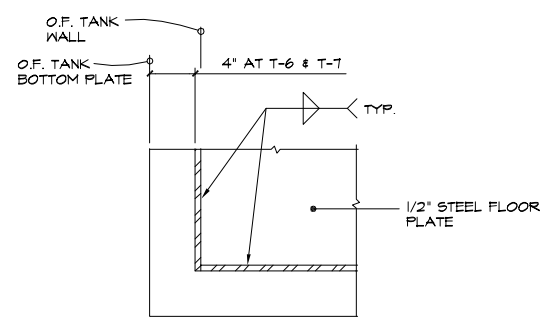

FLOOR PLATE DETAIL

6 TS1.0

SCALE: 1 1/2"=1'-0"

NOTE: 1. ANCHORAGE ANGLE NOT SHOWN.

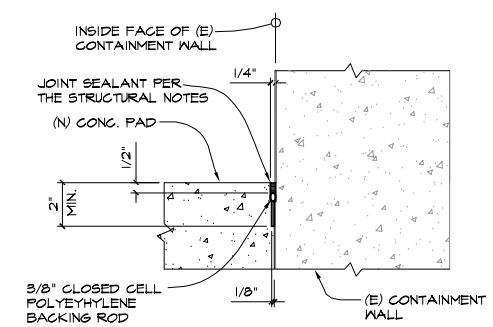

JOINT SEALANT DETAIL

7 TS1.0

N.T.S.

NOTES: 1. REINFORCING NOT SHOWN FOR CLARITY.

ISSUED FOR PERMIT

© TOBEY WADE CONSULTING, INC
THIS DRAWING IS THE PROPERTY OF TOBEY WADE CONSULTING, USE OR REPRODUCTION OF THIS DRAWING, IN WHOLE OR IN PART, IS NOT PERMITTED OF TOBEY WADE CONSULTING IS EXPRESSLY PROHIBITED. THIS DRAWING IS NOT TO BE USED FOR ANY PROJECT OTHER THAN THE PROJECT FOR WHICH IT WAS PREPARED.

tobey wade
CONSULTING
329 Flint Street
Reno, Nevada 89501
Tel. (775) 324-7757 Fax (775) 324-7797

TANK NO.'S T-1 THRU T-3, T-6 & T-7 PLANS AND DETAILS

PSC FERNLEY - TANK REPLACEMENT PROJECT

PREPARED FOR
AUSENCO PSI

LYON COUNTY
NEVADA
FERNLEY

REVISIONS		
NO.	DESCRIPTION/DATE	BY
1	REVISED TANK T-1 - T-3 FLOOR PLATE & ANCHORAGE 8/21/12	TR
2	CONSTRUCTION CHANGES 5/7/13	JR

EXPIRES: JUNE 30, 2012
TERRENCE R. TOBEY, S.E.

JOB NO.	R371-01-11
DESIGNED	T.R.T.
DRAWN	B.C.E.
CONF.	
CHECKED	
DATE	OCT. 12, 2011

TS1.0

OF SHEETS

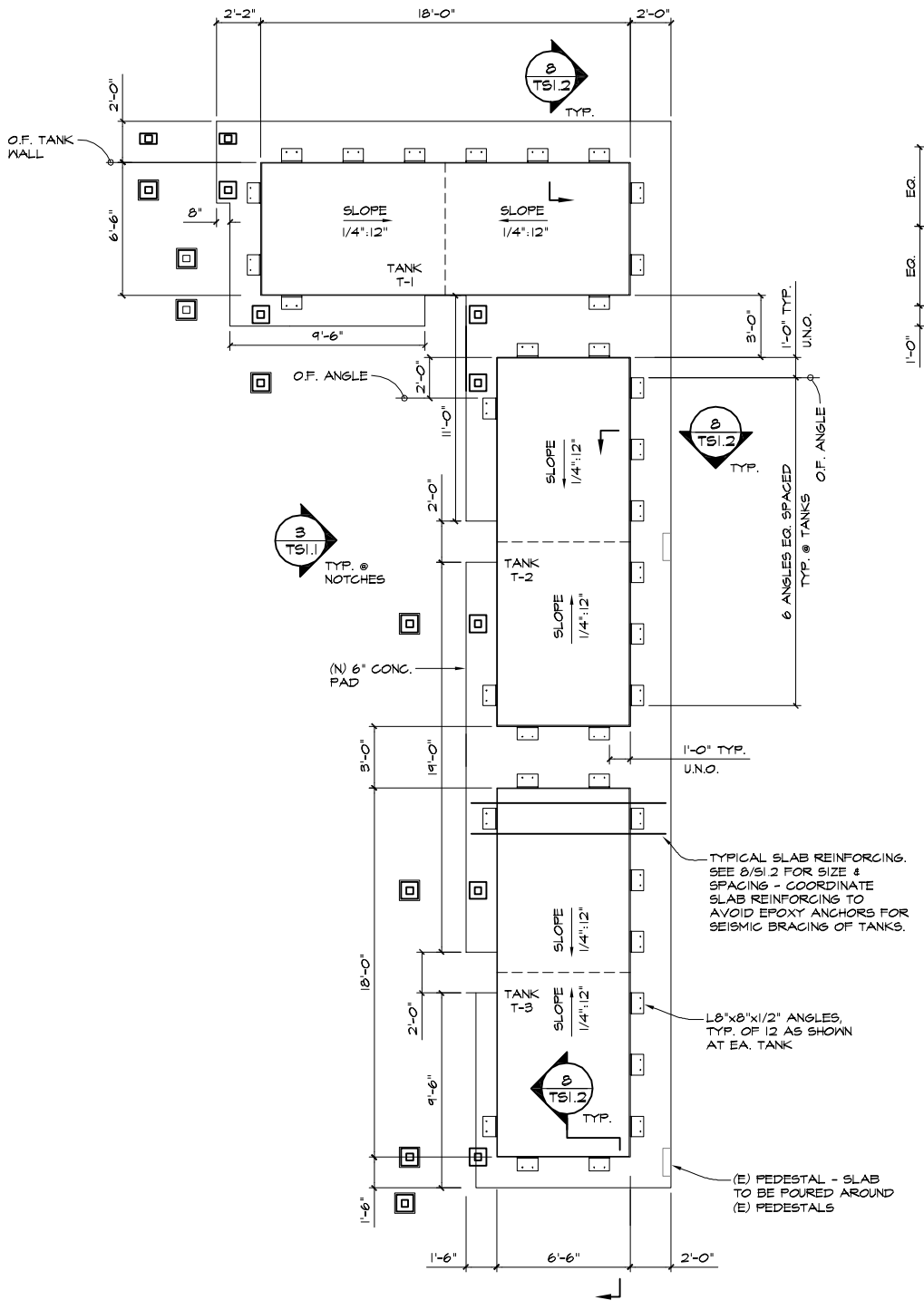

1 TS1.1 TANK NO. T-1, NO. T-2 AND NO. T-3 ANCHORAGE PLAN VIEW

SCALE: 1/4"=1'-0"

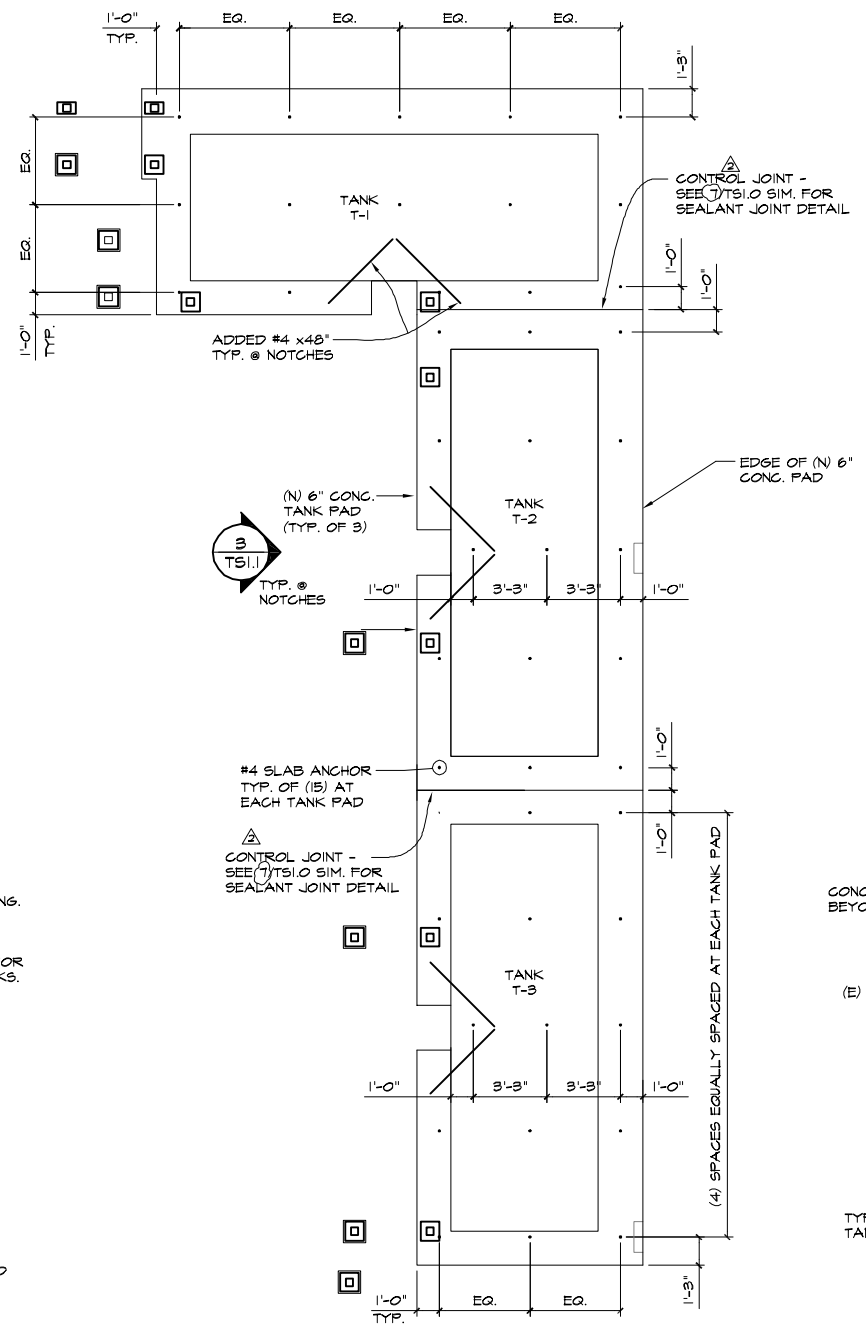

2 TS1.1 ANCHORAGE OF (N) CONC. PAD TO (E) CONC. SLAB

SCALE: 1/4"=1'-0"

NOTES: 1. SLAB ANCHOR LOCATIONS MAY BE ADJUSTED TO AVOID (E) REINFORCING. FILL ABANDONED HOLES w/ EPOXY.

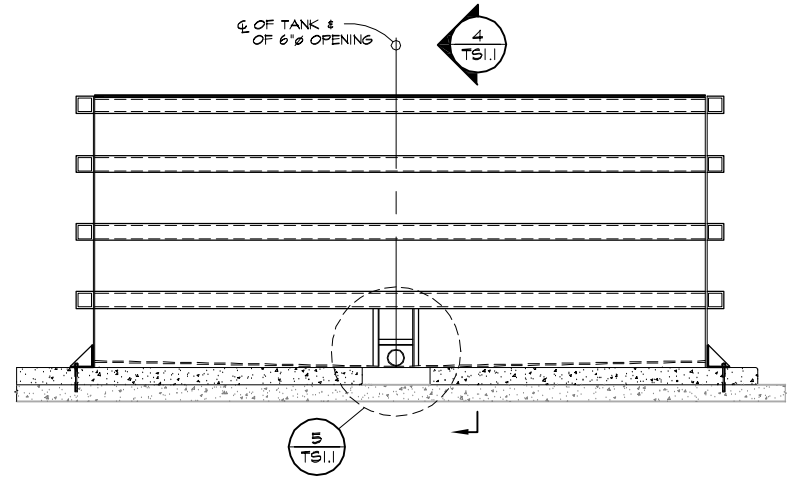

3 TS1.1 DRAINAGE HOLE DETAIL

SCALE: 3/8"=1'-0"

NOTES: 1. LIFTING TABS NOT SHOWN FOR CLARITY.

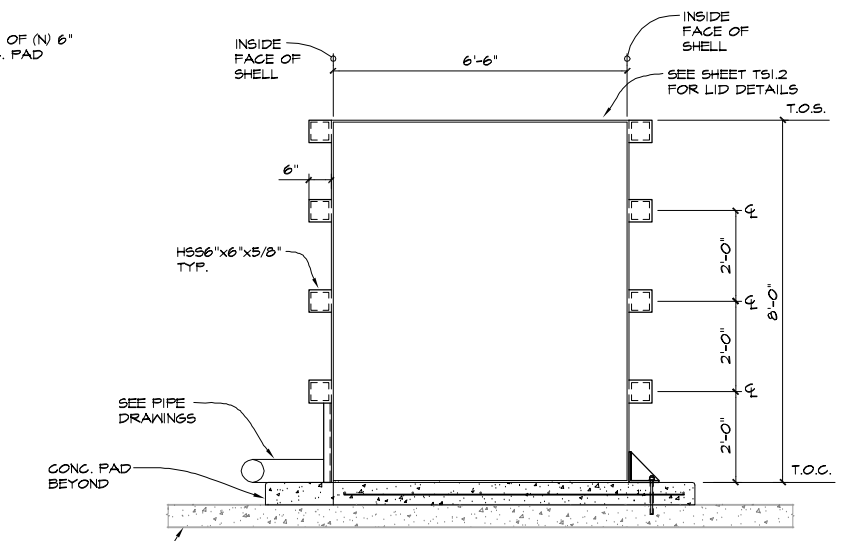

4 TS1.1 TANK ELEVATION

SCALE: 1/2"=1'-0"

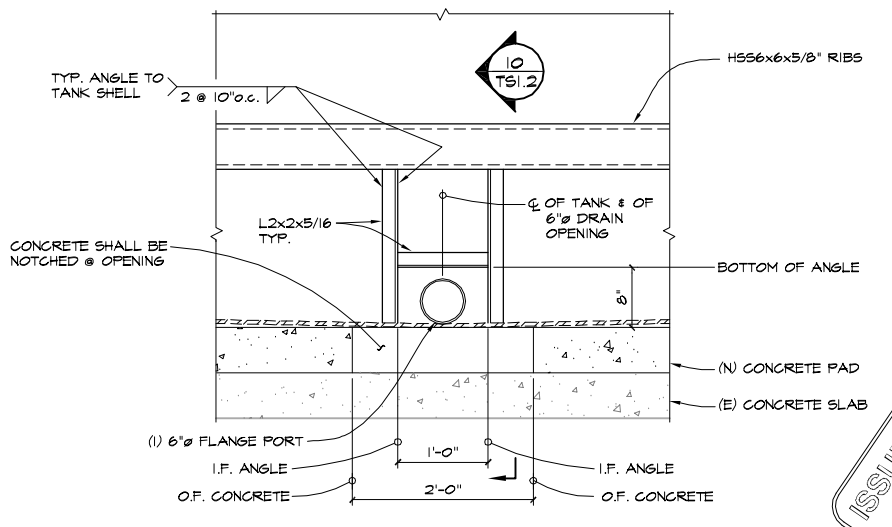

5 TS1.1 DRAINAGE HOLE DETAIL

SCALE: 1"=1'-0"

ISSUED FOR PERMIT

© TOBEY WADE CONSULTING
THIS DRAWING IS THE PROPERTY OF TOBEY WADE CONSULTING, LLC & CAN NOT BE REPRODUCED OR THIS DRAWING, IN WHOLE OR IN PART, OR ANY INFORMATION HEREON TOBEY WADE CONSULTING, LLC IS STRICTLY PROHIBITED. THIS DRAWING IS NOT TO BE USED FOR ANY PROJECT OTHER THAN THE PROJECT FOR WHICH IT WAS PREPARED.

tobey wade
CONSULTING
329 Flint Street
Reno, Nevada 89501
Tel. (775) 324-7757 Fax (775) 324-7797

TANK NO.'s T-1 THRU T-3 ANCHORAGE PLAN, T1 THRU T-3, T-6 & T-7 DETAILS

PSC FERNLEY - TANK REPLACEMENT PROJECT

PREPARED FOR
AUSENCO PSI

LYON COUNTY

NEVADA

FERNLEY

REVISIONS			
NO.	DESCRIPTION/DATE		BY
1	REVISED TANK T-1 , T-3 FLOOR PLATE & ANCHORAGE 8/21/12		T_{RT}
2	CONSTRUCTION CHANGES 5/7/13		T_{AB}

EXPIRES: JUNE 30, 2012

TERRENCE R. TOBEY, S.E.

JOB NO.	R371-01-11
DESIGNED	T.R.T.
DRAWN	B.G.E.
CONP.	
CHECKED	
DATE	OCT. 12, 2011

TS1.1

OF SHEETS

TANK NO.'s T-1 THRU T-3, T-6 & T-7 DETAILS

PSC FERNLEY - TANK REPLACEMENT PROJECT

PREPARED FOR
AUSENCO PSI

FERNLEY | LYON COUNTY | NEVADA

NO.	REVISIONS DESCRIPTION/DATE	BY
1	REVISED TANK T-1 - T-3 FLOOR PLATE & ANCHORAGE 3/21/12	T.R.T.
2	CONSTRUCTION CHANGES 5/7/12	J.A.R.

EXPIRES: JUNE 30, 2012
TERRENCE R. TOBEY, S.E.

JOB NO.	R371-01-11
DESIGNED	T.R.T.
DRAWN	B.C.E.
COMP.	
CHECKED	
DATE	OCT. 12, 2011

TS1.2
OF SHEETS

tobey wade CONSULTING
329 Flint Street
Reno, Nevada 89501
Tel. (775) 324-7757 Fax (775) 324-7797

TANK DATA SHEET

RCRA-Regulated? **YES**
Tank Location: **DETOX ROOM**
Tank Name: **TREATMENT TANK**
Tank Numbers: **T - 1, T - 2, T - 3**
Process Description: **WASTE NEUTRALIZATION, TREATMENT**
Vessel Fluid: **AQUEOUS-BASED WASTE LIQUIDS**
Specific Gravity: **≤ 1.50** Freeboard At Working Vol (ft^3): **1' – 0"**
Normal Operating Pressure (psig): **ATMOSPHERIC** Temperature (°F): **AMBIENT**

	Material	Thickness	Type
Bottom	CARBON STEEL PLATE	5/16" NOMINAL	FLAT
Shell	CARBON STEEL PLATE	5/16" NOMINAL	STRAIGHT
Roof	CARBON STEEL PLATE	¼" NOMINAL	FLAT, BOLTED

Working Volume (USG): **6,125 GALLONS** Insulation: **NONE**
Nominal Volume (USG): **7,000 GALLONS** Method of Construction: **WELDED STEEL**
Tank I.D. (ft): **6'-6" x 18'-0"** Tank Height or Length (ft): **8' – 0"**
Design Code Used: **2006 IBC** Date in Service: **PLANNED Tanks**
Anchorage: **BOLTED TO CONCRETE. Anchorage designs per 2006 IBC.**

Connections

Item No.	Size (In.)	Gasket	Description
1	24"		ROOF MANWAY
2	4"		SIDE FLANGE NOZZLE
3	3"		FILL NOZZLE
4	8"		MIXER NOZZLE
5	4"		VENT FLANGE NOZZLE
6	4"		FLANGE ROOF NOZZLE
7	3"		FLANGE ROOF NOZZLE
8	2"		LEVEL SENSOR CONN.
9	1 ½"		FLANGE NOZZLES (3)
10			
11			
12			
13			
14			
15			

Tank Sketch

Interior Coating: **POLYSPEC VINYL ESTER NOVOLAC SYSTEM.**
Exterior Coating: **BASECOAT EPOXY, TOPCOAT POLYURETHANE ENAMEL.**
Tank Mfger: **to be determined.**

Remarks: **Planned tanks for replacement of existing tanks T-1, T-2, and T-3.**

ADDITION DATE 10/09/09
REVISION NUMBER 1

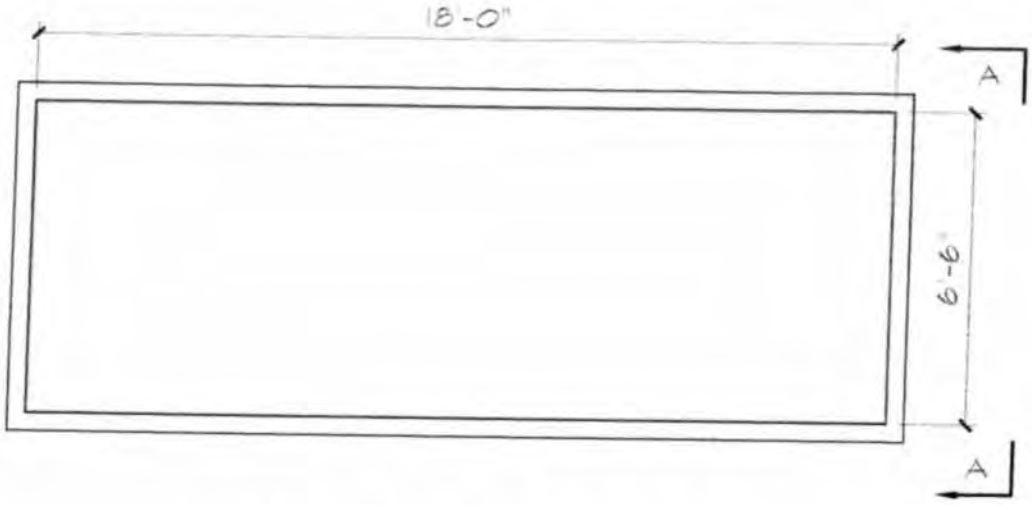

TANK NO's T-2 & T-3
PLAN VIEW
N.T.S.

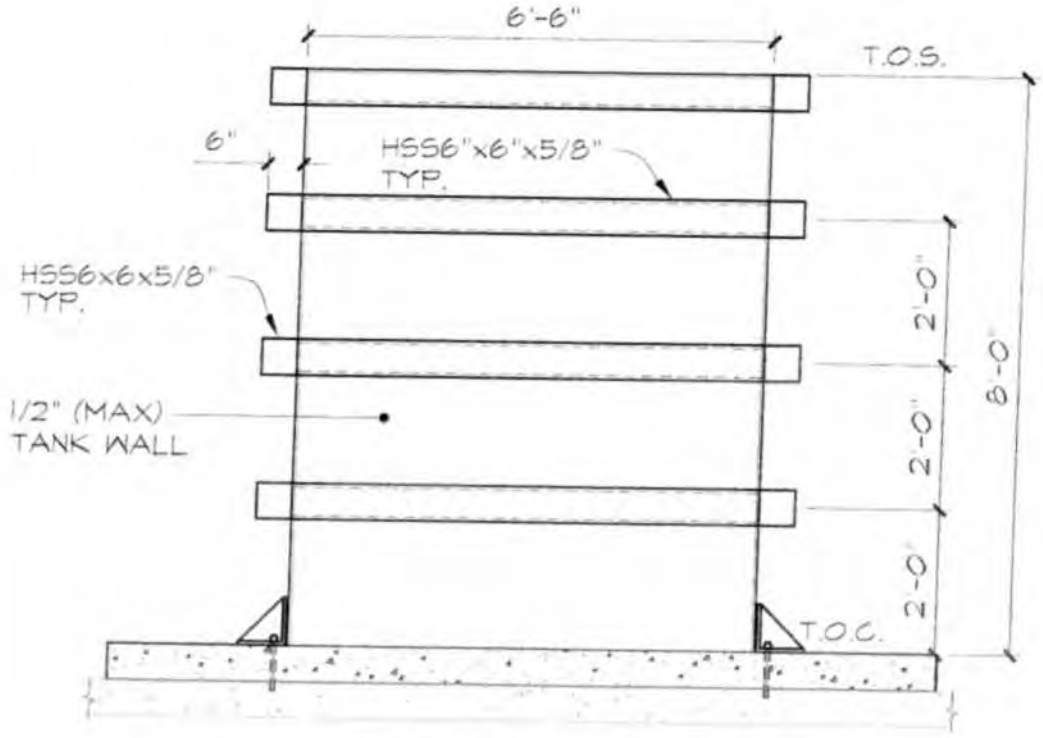

ELEVATION A-A
N.T.S.

tobey wade
CONSULTING
329 Flint Street
Reno, Nevada 89501
Tel. (775) 324-7757 Fax (775) 324-7797

PHILIP SERVICES CORPORATION
FERNLEY FACILITY
TANK NO.'s T-2 & T-3
FERNLEY, NEVADA

Project No.
R115-07-08
D-1
Date: April 15, 2009

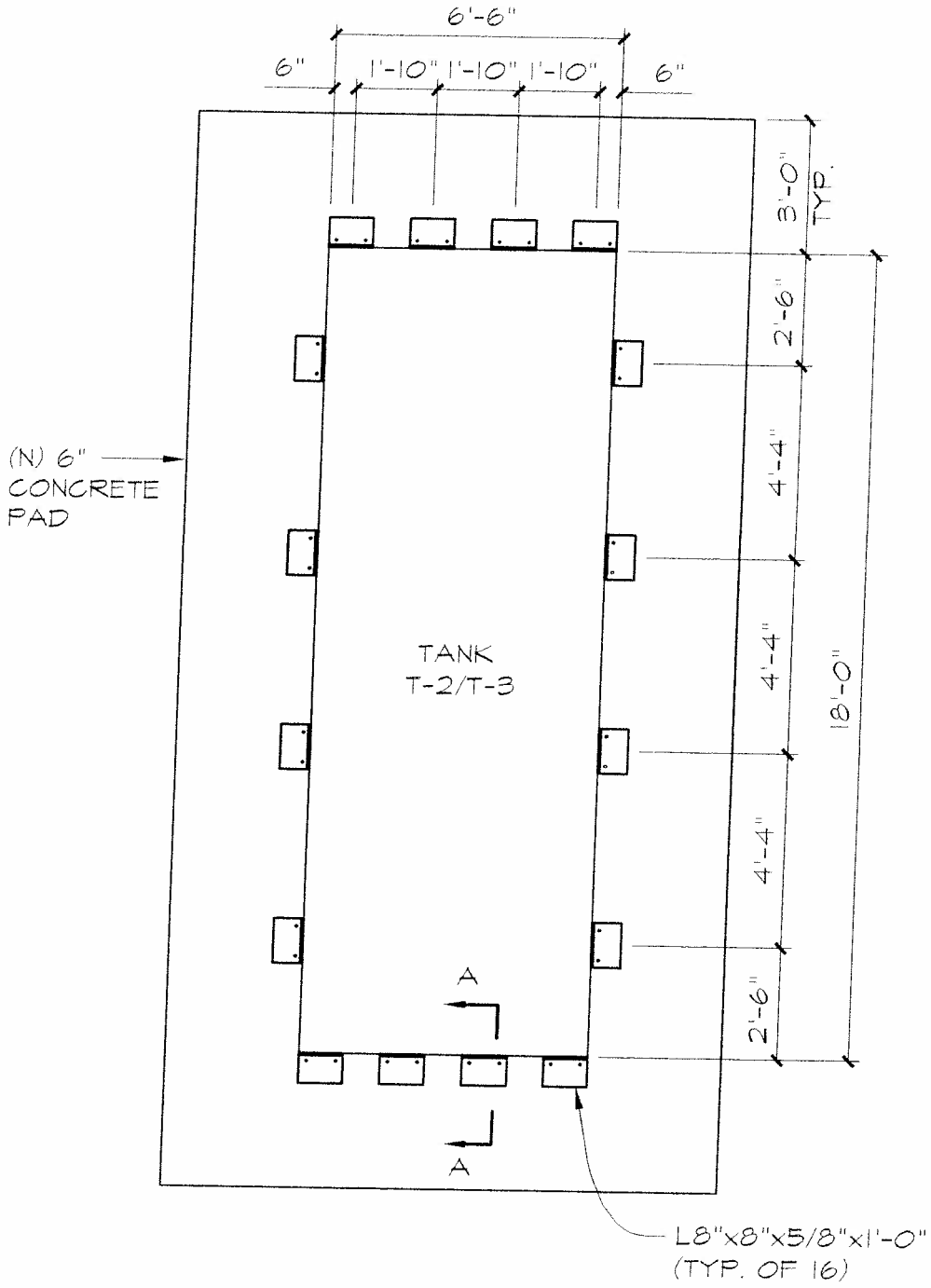

TANK NO's T-2 & T-3 ANCHORAGE PLAN

SCALE: 1/4"=1'-0"

tobey wade
CONSULTING
329 Flint Street
Reno, Nevada 89501
Tel. (775) 324-7757 Fax (775) 324-7797

PHILIP SERVICES CORPORATION
FERNLEY FACILITY
TANK NO.'s T-2 & T-3
FERNLEY, NEVADA

Project No.
R115-07-08
D-2
Date: April 15, 2009

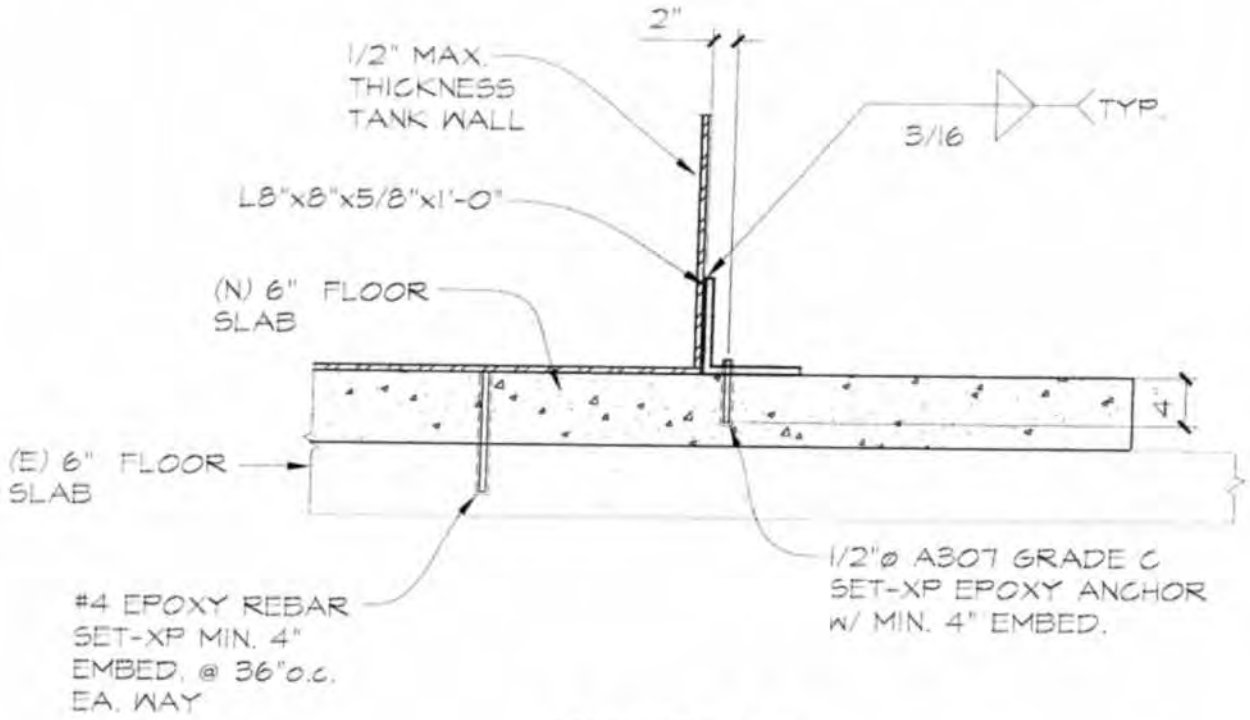

SECTION A-A

N.T.S.

tobey wade
CONSULTING
329 Flint Street
Reno, Nevada 89501
Tel. (775) 324-7757 Fax (775) 324-7797

PHILIP SERVICES CORPORATION
FERNLEY FACILITY
TANK NO.'s T-2 & T-3
FERNLEY, NEVADA

Project No.
R115-07-08
D-3
Date: April 15, 2009

SCHIFF ASSOCIATES

gbell@schiffassociates.com

www.schiffassociates.com
Consulting Corrosion Engineers – Since 1959

October 6, 2009

via email to: Burgess, Aubry [ABurgess@pscnow.com]

PSC ENVIRONMENTAL SERVICES
2095 Newlands Drive E
Fernley, NV 89408

Attention: Mr. Aubry Burgess
Maintenance Supervisor

Re: **Compatibility Certification for Planned Replacement Tank T-3**
for Treatment of Waste Corrosives
Amended Tank Replacement Plan
Fernely, NV
SA#08-1334LGL

Dear Mr. Burgess:

We review information relating to the planned replacement for Tank T-3. The planned replacement will be a coated and lined steel tank. The tank may or may not have a steel top and our recommendations include both alternatives.

Based on this information we have been provided about the historic and planned waste streams, we have determined that the internal surfaces of the planned replacement steel tank should be lined with PermaRez 333, a 120 mil heavy-duty lining system for steel substrates, combines vinyl ester novolac resin, inert mineral fillers and fiberglass or synthetic reinforcement to produce a dimensionally stable liner suited for immersion and splash/spillage exposure of concentrated acids and aggressive solvents. The compatible PolySpec 310 (primer) and PolySpec731 (non-sag gel) should be used for building a smooth cove in the transition between floor, shell and any transitions or corners. The cove will take the strain of a "hard angle" transition out of the coating system during the flex period created when head pressures and temperatures cause the steel to move. Product datasheets and specifications for the PermaRez 333 system and its components are attached.

If the tank has an open top, then the exterior of the tank should be encapsulated/coated with the same material as the lining (PermaRez 333). If a fixed roof is used, then the exterior coating systems should be a Sherwin Williams Macropoxy 646 with a Urethane top coat of Poly Lon HP also by Sherwin Williams. Exterior Film Thickness should be 4 to 6 mils DFT each of Macropoxy 646 (two coats) and 2 to 4 mils each Poly Lon HP (1

1489 W. Warm Springs Road #110 · Henderson, NV 89014
Phone: 702.966.8266 · Fax: 702.946.6767

ADDITION DATE 10/09/09

REVISION NUMBER 1

coat) with a target total exterior dry film thickness of 10 mils. Product data sheets for these exterior coatings for fixed roof tanks are attached.

As with all high-performance lining and coating systems, quality assurance and control during application is critical to service performance. We recommend full-time third-party inspection by Level III certified NACE International Coating inspectors.

I certify that based on the information provided to me that the above recommended liner system is suitable for the waste processing stream of the PSC Facility as configured and intended per the Amended Tank Replacement Program outlined in the letter from Thomas Nelson of PSC to Nevada Division of Environmental Protection dated March 25, 2008.

CERTIFICATION

I certify under penalty of law that this document and all attachments were prepared under my direction or supervision according to a system designed to assure that qualified personnel properly gather and evaluate the information submitted. Based on my inquiry of the person or persons who manage the system, or those persons directly for gathering the information, the information submitted is, to the best of my knowledge and belief, true, accurate, and complete. I am aware that there are significant penalties for submitting false information, including the possibility of fine and imprisonment for knowing violations.

CLOSURE

Our services have been performed with the usual thoroughness and competence of the engineering profession. No other warranty or representation, either expressed or implied, is included or intended.

Sincerely,
SCHIFF ASSOCIATES

GRAHAM E.C. BELL
EXP. 12-31-10
MECHANICAL

Graham E.C. Bell, PE
Principal Engineer
NACE International Corrosion Specialist #5350

Attachments: PermaRez 33, FlakeRex 304, PolySpec 310, PolySpec 731 Tech Data Sheets
General Specification for Lining Steel Tanks with PermaRez
Macropoxy 646, Polylon HP Ployurethane Tech Data Sheets and MSDS

PermaRez® 333

TECHNICAL DATA SHEET

Reinforced Lining for Concrete & Steel, Acid & Solvent Resistant

DESCRIPTION

PermaRez 333, a 120 mil heavy-duty lining system for concrete and steel substrates, combines vinyl ester novolac resin, inert mineral fillers and fiberglass or synthetic reinforcement to produce a dimensionally stable liner ideally suited for immersion and splash/spillage exposure of concentrated acids and aggressive solvents.

TYPICAL APPLICATION

• Primer	PolySpec 310 (steel) / 320 (concrete) @ 2–3 mils DFT
• Detail Preparation	PolySpec 731
• Basecoat	PermaRez 333 w/F-4 Powder @ 50–60 mils
• Fabric	Type W (10 oz. woven-roving)
• Saturant	PermaRez 333 @ 25 mils
• Topcoat	PermaRez 333 w/F-4 Powder @ 50–60 mils PolySpec Smoothing Liquid #1
• Options	Carbon-Filled, Non-Silica Applications (recommended for fluoride or caustic service) – Powder: F-5 Powder – Fabric: Type V (Nexus Veil)

PERFORMANCE DATA

Compressive Strength (ASTM C-579)	12,000 psi
Tensile Strength (ASTM C-307)	3,000 psi
Flexural Strength (ASTM C-580)	12,500 psi
Hardness, Shore D (ASTM D-2240)	85–90
Bond Strength (ASTM D-4541)	425 psi
Abrasion Resistance (ASTM D-4060)	100 mg
Operating Temperature, maximum ...Dry:	350–400°F
...Wet:	Dependant on chemical exposure
VOC	1.58 lb/gal; 190 gm/L

STORAGE & INSTALLATION

Storage Environment	Dry area, 65–80°F
Application Temperature, ambient	50–95°F
Application Temperature, substrate	Minimum 5°F above dew point
Shelf Life, PROVIDED STORAGE ENVIRONMENT GUIDELINES ARE FOLLOWED	60 days
Pot Life, @ 77°F	35 minutes
Full Service, @ 77°F	7 days

Material cures more slowly at cooler temperatures, and working time will be substantially reduced at higher temperatures. In hot weather, material should be cooled to 65°F to 80°F prior to mixing and application to improve workability and avoid shortened pot life. The data shown above reflects typical results based on laboratory testing under controlled conditions. Reasonable variations from the data shown above may result.

CONSIDERATIONS & LIMITATIONS

1. For best results, work area should be humidity and temperature controlled.
2. Work area must be well ventilated. Fresh air fed respirators are recommended when working with this product.
3. Do not thin with solvents unless advised to do so by PolySpec.
4. Confirm product performance in specific chemical environment prior to use.
5. Prepare substrate according to "Surface Preparation" portion of this document.
6. Do not apply to slabs on grade unless a heavy unruptured vapor barrier has been installed under the slab.
7. Always use protective clothing, gloves and goggles consistent with OSHA regulations during use. Avoid eye and skin contact. Do not ingest or inhale. Refer to Material Safety Data Sheet for detailed safety precautions.
8. For industrial/commercial use. Installation by trained personnel only.

BENEFITS

- *Excellent resistance to aggressive acids, alkalies and solvents; withstands attack from 75% sulfuric acid, 37% hydrochloric acid and 100% phosphoric acid*
- *Seamless, high tensile strength composite*
- *Extremely low permeation rate; superior performance to acid-proof brick*
- *Excellent dimensional stability; withstands wide temperature range*
- *Temperature resistant: Wet 220°F / Dry 400°F*
- *Superior compatibility with concrete and steel when compared with conventional coatings*

RECOMMENDED USES

- *Steel process and storage tanks*
- *Concrete waste treatment sumps*
- *Trenches, pedestals, curbs*
- *Secondary containment*
- *Truck loading/unloading areas*
- *Chemical pump pads*

GENERIC DESCRIPTION

Vinyl Ester Novolac

STANDARD COLORS

Gray
(Amber liquid, before addition of Powder)

PACKAGING

5-Gallon Unit

Filler Powder sold separately; per 5-Gallon Unit:
- *125 pounds F-4 Powder, sold in 50 lb bags*
- *30 pounds F-5 Powder, sold in 30 lb pails*

Fabric sold separately:
- *Type W (10 oz cloth) sold in 2,231 ft² rolls*
- *Type V (Nexus Veil) sold in 6,000 ft² rolls*

PolySpec 731 and PolySpec Smoothing Liquid #1 sold separately

COVERAGE

15 ft² / gallon @ 120 mils
(Includes two 60 mil coats and saturant)

SEE SYSTEM DETAILS IN "TYPICAL INSTALLATION" PORTION OF THIS DOCUMENT

SURFACE PREPARATION

Concrete: Apply only to clean, dry and sound concrete substrates that are free of all coatings, sealers, curing compounds, oils, greases or any other contaminants.

- *New concrete should be cured a minimum of 28 days.*
- *Concrete that has been contaminated with chemicals or other foreign matter must be neutralized or removed.*
- *Remove any laitance or weak surface layers.*
- *Concrete should have a minimum surface tensile strength of at least 300 PSI per ASTM D-4541.*
- *Surface profile shall be CSP-3 to CSP-5 meeting ICRI (International Concrete Repair Institute) standard guideline #03732 for coating concrete, producing a profile equal to 60-grit sandpaper or coarser. Prepare surface by mechanical means to achieve this desired profile.*
- *Moisture vapor transmission should be 3 pounds or less per 1,000 square feet over a 24 hour time period, as confirmed through a calcium chloride test, as per ASTM E-1907. Quantitative relative humidity (RH) testing, ASTM F-2170, should confirm concrete RH results <75%.*
- *All surface irregularities, cracks, expansion joints and control joints should be properly addressed prior to application.*
- *Outgassing may occur due to the porosity of some concrete surfaces. To reduce the effect of outgassing, the primer and coating should be applied when the temperature of the concrete substrate is dropping. This usually occurs in the evening; however, the concrete substrate temperature should be measured with a surface thermometer for verification. Double priming will greatly reduce the effects of outgassing by additionally filling the pores in the concrete.*

Steel: For immersion service, "White Metal" abrasive blast with an anchor profile of 2–4 mils in accordance with Steel Structures Painting Council Specification SP-5-63 or NACE No. 1 is required. For splash and spillage exposure, "Near White" SP-10-63 or NACE No. 2 is required.

Refer to PolySpec Surface Preparation Guidelines for more details.

INSTALLATION STEPS

1. Prime surface with PolySpec 310 (steel) or PolySpec 320 (concrete) Primer. See data sheet for application details.
2. Use PolySpec 731 to round the corner radius of vertical to horizontal transitions, to smooth weld seams, and to patch holes and irregularities. See data sheet for application details.
3. Pour Hardener #3 into PermaRez 333 Resin pail. Mix thoroughly using a jiffy-type mixer operated at low speed until a proper blend is attained. Scrape the sides of the pail to ensure the product has been properly mixed; any unmixed material left on the side of the pail will not cure.

   NOTE: Mix ratio is 2.5 ounces Hardener #3 to one gallon PermaRez 333 Resin.
4. Stir in F-4 or F-5 filler powder and mix well until all particles are wetted out.

   NOTE: Mix ratio is approximately 25 pounds F-4 (or 6 pounds F-5) filler per mixed gallon of binder.
5. Spread basecoat mixture onto surface by trowel to a thickness of 1/16". Immediately lay the reinforcement fabric into the basecoat and press out all air pockets with a dry paint roller.
6. Saturate the reinforcement with a coat of catalyzed PermaRez 333 Resin (without powder). Roll out saturant coat until the whiteness of the reinforcement disappears.
7. After the saturated basecoat has dried, grind down any burrs that have appeared on the surface.
8. Spread topcoat mixture (PermaRez 333 with filler powder) with a steel trowel as evenly as possible to a thickness of 1/16".

   NOTE: Recoat time over saturant coat is normally 24 hours.
9. Before topcoat is allowed to dry, smooth with a paint brush dipped lightly in PolySpec Smoothing Liquid #1.
10. For best results, clean tools and equipment with PolySpec® All Purpose Cleaner, a nonflammable and non-evaporating cleaner. Always wear gloves when using this product.

1 gal R: 2.5 oz H / DOC PR333-TDS

Rev 04/08

PermaRez and PolySpec are ® Registered Trademarks of PolySpec L.P.

© Copyright 2005 PolySpec L.P. All rights reserved. Published technical data and instructions are subject to change without notice. Please visit the online catalog at www.polyspec.com for the most current technical data and instructions. Or, you may contact your PolySpec representative for current technical data and instructions.

PolySpec, L.P. warrants its products to be free from defects in material and workmanship. PolySpec's sole obligation and Buyer's exclusive remedy in connection with the products shall be limited, at PolySpec's option, to either replacement of products not conforming to this warranty or credit to Buyer's account in the invoiced amount of the nonconforming products. Any claim under this Warranty must be made by Buyer to PolySpec in writing within five days of Buyer's discovery of the claimed defect, but in no event later than the expiration of the applicable shelf life, or one year from the delivery date, whichever is earlier. Buyer's failure to notify PolySpec of such nonconformance as required herein shall bar Buyer from recovery under this warranty.

PolySpec makes no other warranties concerning this product. No other warranties, either expressed or implied, or statutory, such as warranties of merchantability or fitness for a particular purpose, shall apply. In no event shall PolySpec be liable for consequential or incidental damages.

Any recommendation or suggestion relating to the use of the products made by PolySpec, whether in its technical literature, or in response to specific inquiry, or otherwise, is based on data believed to be reliable; however, the products and information are intended for use by Buyers having requisite skill and know-how in the industry, and therefore it is for the Buyer to satisfy itself of the suitability of the products for its own particular use, and it shall be deemed that Buyer has done so, at its sole discretion and risk. Variation in environment changes in procedures of use, or extrapolation of data may cause unsatisfactory results. PolySpec cannot guarantee that color will conform to sample, if provided.

POLYSPEC L.P. • 6614 GANT ROAD, HOUSTON TEXAS 77066 USA • T: 281 397 0033 • F: 281 397 0512 • www.polyspec.com

FlakeRez® 304

TECHNICAL DATA SHEET

Concrete & Steel Coating, Graphite Flake-Filled, Fluoride Resistant

DESCRIPTION

FlakeRez 304, a two component, graphite flake-filled vinyl ester novolac resin coating for primary and secondary containment, resists higher concentrations of acids and solvents where most other coatings fail. FlakeRez coatings contain inert flake reinforcement for dependability in maintaining their overlapping structure. The flakes within the chemical resistant resin matrix provide an extremely low permeation rate, which greatly reduces passage of ions through the coating.

TYPICAL APPLICATION

• Primer	PolySpec 310 (steel) / 320 (concrete) @ 2–3 mils DFT
• Detail Preparation	PolySpec 731
• Basecoat	FlakeRez 304 @ 15–20 mils DFT
• Topcoat	FlakeRez 304 @ 15–20 mils DFT

PERFORMANCE DATA

Tensile Strength (ASTM C-307)	3,500 psi
Flexural Strength (ASTM C-580)	8,500 psi
Hardness, Barcol (ASTM D-2583)	35–40
Abrasion Resistance (ASTM D-4060)	25 mg
Moisture Permeability, perm. in. (ASTM E-96)	0.002
Operating Temperature, maximum . Dry:	300–350°F
Wet:	Dependant on chemical exposure
VOC	1.23 lb/gal; 148 gm/L

STORAGE & INSTALLATION

Storage Environment	Dry enclosed area, 65–80°F
Application Temperature, ambient	50–95°F
Application Temperature, substrate	Minimum 5°F above dew point
Shelf Life, PROVIDED STORAGE ENVIRONMENT GUIDELINES ARE FOLLOWED	60 days
Pot Life, @ 77°F	30 minutes
Full Service, @ 77°F	3–5 days

Material cures more slowly at cooler temperatures, and working time will be substantially reduced at higher temperatures. In hot weather, material should be cooled to 65°F to 80°F prior to mixing and application to improve workability and avoid shortened pot life. The data shown above reflects typical results based on laboratory testing under controlled conditions. Reasonable variations from the data shown above may result.

CONSIDERATIONS & LIMITATIONS

1. For best results, work area should be humidity and temperature controlled.
2. Work area must be well ventilated. Fresh air fed respirators are recommended when working with this product.
3. Do not thin with solvents unless advised to do so by PolySpec.
4. Confirm product performance in specific chemical environment prior to use.
5. Prepare substrate according to "Surface Preparation" portion of this document.
6. Do not apply to slabs on grade unless a heavy unruptured vapor barrier has been installed under the slab.
7. Always use protective clothing, gloves and goggles consistent with OSHA regulations during use. Avoid eye and skin contact. Do not ingest or inhale. Refer to Material Safety Data Sheet for detailed safety precautions.
8. For industrial/commercial use. Installation by trained personnel only.

BENEFITS

- *Excellent resistance to fluorides such as hydrofluoric and hydrofluosilicic acids*
- *Seamless, jointless barrier coating*
- *Long-term reliability due to extremely low permeation rate of overlapping flake technology*
- *Easy application in two 20-mil coats*
- *No baking required*
- *Withstands high operating temperatures*

RECOMMENDED USES

- *Tank interior lining*
- *Process vessels*
- *Process floors*
- *Tank and effluent sump dikes*

GENERIC DESCRIPTION

Graphite Flake-Filled Vinyl Ester Novolac

STANDARD COLORS

Charcoal Gray

PACKAGING

4.5-Gallon Unit

COVERAGE

25–30 ft^2 / gallon @ 35–40 mils DFT

(INCLUDES 2 COATS @ 15–20 MILS DFT EACH)

5614 GANT ROAD • HOUSTON, TEXAS 77066 • TEL: 281-397-0033 • FAX: 281-397-6512
www.polyspec.com

PolySpec

SURFACE PREPARATION

Concrete: Apply only to clean, dry and sound concrete substrates that are free of all coatings, sealers, curing compounds, oils, greases or any other contaminants.

- *New concrete should be cured a minimum of 28 days.*
- *Concrete that has been contaminated with chemicals or other foreign matter must be neutralized or removed.*
- *Remove any laitance or weak surface layers.*
- *Concrete should have a minimum surface tensile strength of at least 300 PSI per ASTM D-4541.*
- *Surface profile shall be CSP-3 to CSP-5 meeting ICRI (International Concrete Repair Institute) standard guideline #03732 for coating concrete, producing a profile equal to 60-grit sandpaper or coarser. Prepare surface by mechanical means to achieve this desired profile.*
- *Moisture vapor transmission should be 3 pounds or less per 1,000 square feet over a 24 hour time period, as confirmed through a calcium chloride test, as per ASTM E-1907. Quantitative relative humidity (RH) testing, ASTM F-2170, should confirm concrete RH results <75%.*
- *All surface irregularities, cracks, expansion joints and control joints should be properly addressed prior to application.*
- *Outgassing may occur due to the porosity of some concrete surfaces. To reduce the effect of outgassing, the primer and coating should be applied when the temperature of the concrete substrate is dropping. This usually occurs in the evening; however, the concrete substrate temperature should be measured with a surface thermometer for verification. Double priming will greatly reduce the effects of outgassing by additionally filling the pores in the concrete.*

Steel: For immersion service, "White Metal" abrasive blast with an anchor profile of 2–4 mils in accordance with Steel Structures Painting Council Specification SP-5-63 or NACE No. 1 is required. For splash and spillage exposure, "Near White" SP-10-63 or NACE No. 2 is required.

Refer to PolySpec Surface Preparation Guidelines for more details.

INSTALLATION STEPS

1. Prime surface with PolySpec 310 (steel) or PolySpec 320 (concrete) Primer. See data sheet for application details.

   NOTE: For enclosed steel structures, if dehumidification equipment is utilized, the coating may be applied directly to the prepared substrate without the use of primer.

2. Use PolySpec 731 to round the corner radius of vertical to horizontal transitions, to smooth weld seams, and to patch holes and irregularities. See data sheet for application details.

3. Weld seams should be ground smooth prior to coating application. It may be necessary to apply a precoat of FlakeRez 304 to all seam areas.

4. Catalyze FlakeRez 304 by adding 3 ounces of Hardener #1 per gallon to the resin and mixing well with a mechanical mixer operated at low speed.

5. Apply first coating at 15–20 dry mils:

   a. **Spray Application: Conventional or Airless Spray**

   Detail all edges prior to spray application.

   When applying by spray, apply in a criss-cross pattern, taking care to avoid excessive build-up of coating.

   b. **Brush or Roller Application**

   Brush or roll onto substrate.

6. Allow product to cure for 2–4 hours @ 75°F. Apply second coat.

   NOTE: Add 3oz. wax solution per gallon to the topcoat to minimize surface tack.

   NOTE: Maximum recoat window is 48 hours.

   NOTE: Two 15–20 dry mil coats are adequate for most jobs.

   NOTE: If coating is allowed to cure for over 12 hours prior to recoating, check bond by rubbing surface with PolySpec® Smoothing Liquid #1. If coating becomes slightly tacky, then surface is ready for second coat. If surface is unaffected, sand lightly before recoating.

7. After coating is completed, allow 3–5 days for curing. Random sample checks using a Barcol Hardness gauge should indicate a minimum reading of 30.

8. Before placing into service, pinhole test the entire surface using 2,500 to 3,000 volts. All pinhole areas should be recoated and retested.

9. For best results, clean tools and equipment with PolySpec® All Purpose Cleaner, a nonflammable and non-evaporating cleaner. Always wear gloves when using this product.

1 GAL R: 3 OZ H / DOC FR304-TDS

FlakeRez and PolySpec are ® Registered Trademarks of PolySpec L.P. Rev 06/07

© Copyright 2005 PolySpec L.P. All rights reserved. Published technical data and instructions are subject to change without notice. Please visit the online catalog at www.polyspec.com for the most current technical data and instructions. Or, you may contact your PolySpec representative for current technical data and instructions.

PolySpec, L.P. warrants its products to be free from defects in material and workmanship. PolySpec's sole obligation and Buyer's exclusive remedy in connection with the products shall be limited, at PolySpec's option, to either replacement of products not conforming to this warranty or credit to Buyer's account in the invoiced amount of the nonconforming products. Any claim under this Warranty must be made by Buyer to PolySpec in writing within five days of Buyer's discovery of the claimed defect, but in no event later than the expiration of the applicable shelf life, or one year from the delivery date, whichever is earlier. Buyer's failure to notify PolySpec of such nonconformance as required herein shall bar Buyer from recovery under this warranty.

PolySpec makes no other warranties concerning this product. No other warranties, either expressed or implied, or statutory, such as warranties of merchantability or fitness for a particular purpose, shall apply. In no event shall PolySpec be liable for consequential or incidental damages.

Any recommendation or suggestion relating to the use of the products made by PolySpec, whether in its technical literature, or in response to specific inquiry, or otherwise, is based on data believed to be reliable; however, the products and information are intended for use by Buyers having requisite skill and know-how in the industry, and therefore it is for the Buyer to satisfy itself of the suitability of the products for its own particular use, and it shall be deemed that Buyer has done so, at its sole discretion and risk. Variation in environment changes in procedures of use, or extrapolation of data may cause unsatisfactory results. PolySpec cannot guarantee that color will conform to sample, if provided.

PolySpec® 310

TECHNICAL DATA SHEET

Primer for Vinyl Esters & Polyesters on Steel

DESCRIPTION

PolySpec 310 primer is used on blasted steel surfaces prior to application of FlakeRez and PermaRez coatings and lining systems.

TYPICAL APPLICATION

• Primer	PolySpec 310 @ 250–350 ft²/gallon
• Overcoat	Flooring or Lining System from PolySpec

PERFORMANCE DATA

Tensile Strength (ASTM D-412)	10,000 psi
Elongation (ASTM D-638)	10–12%
Hardness, Barcol	30

STORAGE & INSTALLATION

Storage Environment	Dry area, 65–80°F
Application Temperature, ambient	50–95°F
Application Temperature, substrate	Minimum 5°F above dew point
Shelf Life, PROVIDED STORAGE ENVIRONMENT GUIDELINES ARE FOLLOWED	60 days
Pot Life, @ 77°F	25 minutes
Minimum Recoat, @77°F	6–8 hours

Material cures more slowly at cooler temperatures, and working time will be substantially reduced at higher temperatures. In hot weather, material should be cooled to 65°F to 80°F prior to mixing and application to improve workability and avoid shortened pot life. The data shown above reflects typical results based on laboratory testing under controlled conditions. Reasonable variations from the data shown above may result.

CONSIDERATIONS & LIMITATIONS

1. Apply PolySpec 310 within eight (8) hours of the blasting operation to protect the blasted surface from rusting.
2. For best results, this product should be applied in a humidity and temperature-controlled environment.
3. Do not thin with solvents unless advised to do so by PolySpec.
4. Confirm product performance in specific chemical environment prior to use.
5. Prepare substrate according to "Surface Preparation" portion of this document.
6. Always use protective clothing, gloves and goggles consistent with OSHA regulations during use. Avoid eye and skin contact. Do not ingest or inhale. Refer to Material Safety Data Sheet for detailed safety precautions.
7. For industrial/commercial use. Installation by trained personnel only.

BENEFITS

- *Provides flexible transition between steel substrate and lining system*
  - *Excellent surface adhesion to steel substrate*
  - *Excellent bond to subsequent lining systems*
- *Protects blasted steel surface from rust*
- *Contains no lead pigment*

RECOMMENDED USES

- *Used in conjunction with FlakeRez® and PermaRez® polyester or vinyl ester coatings & lining systems for steel*

GENERIC DESCRIPTION

Primer

STANDARD COLORS

Amber

PACKAGING

1-Gallon Unit

5-Gallon Unit

COVERAGE

250–300 ft² / gallon @ 1–3 mils DFT

6614 GANT ROAD • HOUSTON, TEXAS 77066 • TEL: 281-397-0033 • FAX: 281-397-6512
www.polyspec.com

PolySpec

SURFACE PREPARATION

Steel: For immersion service, "White Metal" abrasive blast with an anchor profile of 2–4 mils in accordance with Steel Structures Painting Council Specification SP-5-63 or NACE No. 1 is required. For splash and spillage exposure, "Near White" SP-10-63 or NACE No. 2 is required.

Refer to PolySpec Surface Preparation Guidelines for more details.

INSTALLATION STEPS

NOTE: For best results, this product should be applied in a humidity and temperature-controlled environment.

NOTE: Apply PolySpec 310 within eight (8) hours of the blasting operation to protect the blasted surface from rusting.

1. Add 2 ounces of Hardener #1 per gallon of resin. Mix thoroughly using a mechanical jiffy-type mixer operated at low speed.
2. Apply by roller or spray.
3. After the prime coat is dry to the touch (usually 6–8 hours at 77°F), proceed to installation of FlakeRez® or PermaRez® coating/lining system.

   NOTE: PolySpec 310 must be recoated within 72 hours. For longer waiting periods, wipe with styrene until surface becomes tacky. If surface remains hard, sandblasting is required.
4. For best results, clean tools and equipment with PolySpec® All Purpose Cleaner, a nonflammable and non-evaporating cleaner. Always wear gloves when using this product.

1galR : 2ozH / DOC PS310-TDS

PolySpec, FlakeRez and PermaRez are ® Registered Trademarks of PolySpec L.P. Rev 07/05

© Copyright 2005 PolySpec L.P. All rights reserved. Published technical data and instructions are subject to change without notice. Please visit the online catalog at www.polyspec.com for the most current technical data and instructions. Or, you may contact your PolySpec representative for current technical data and instructions.

PolySpec, L.P. warrants its products to be free from defects in material and workmanship. PolySpec's sole obligation and Buyer's exclusive remedy in connection with the products shall be limited, at PolySpec's option, to either replacement of products not conforming to this warranty or credit to Buyer's account in the invoiced amount of the nonconforming products. Any claim under this Warranty must be made by Buyer to PolySpec in writing within five days of Buyer's discovery of the claimed defect, but in no event later than the expiration of the applicable shelf life, or one year from the delivery date, whichever is earlier. Buyer's failure to notify PolySpec of such nonconformance as required herein shall bar Buyer from recovery under this warranty.

PolySpec makes no other warranties concerning this product. No other warranties, either expressed or implied, or statutory, such as warranties of merchantability or fitness for a particular purpose, shall apply. In no event shall PolySpec be liable for consequential or incidental damages.

Any recommendation or suggestion relating to the use of the products made by PolySpec, whether in its technical literature, or in response to specific inquiry, or otherwise, is based on data believed to be reliable; however, the products and information are intended for use by Buyers having requisite skill and know-how in the industry, and therefore it is for the Buyer to satisfy itself of the suitability of the products for its own particular use, and it shall be deemed that Buyer has done so at its sole discretion and risk. Variation in environment changes in procedures of use, or extrapolation of data may cause unsatisfactory results. PolySpec cannot guarantee that color will conform to sample, if provided.

POLYSPEC L.P. • 8614 GANT ROAD, HOUSTON TEXAS 77066 USA • T 281 397 0033 • F 281 397 6512 • www.polyspec.com

PolySpec® 731

TECHNICAL DATA SHEET

Non-Sag Gel, for use with Vinyl Esters & Polyesters

DESCRIPTION

PolySpec 731 is a polyester putty material used with polyester and vinyl ester lining systems. It is used primarily to round the corner radius at vertical to horizontal transitions in steel and concrete prior to lining applications.

PERFORMANCE DATA

Tensile Strength (ASTM D-412)	1,800 psi
Bond Strength (ASTM D-4541)	300 psi
Viscosity	Heavy Paste
VOC	0.405 lb/gal; 296 gm/L

STORAGE & INSTALLATION

Storage Environment	Dry area, 65–80°F
Application Temperature, ambient	50–95°F
Application Temperature, substrate	Minimum 5°F above dew point
Shelf Life, PROVIDED STORAGE ENVIRONMENT GUIDELINES ARE FOLLOWED	60 days
Pot Life, @ 77°F	20–25 minutes
Set Time, @ 77°F	2–4 hours

Material cures more slowly at cooler temperatures, and working time will be substantially reduced at higher temperatures. In hot weather, material should be cooled to 65°F to 80°F prior to mixing and application to improve workability and avoid shortened pot life. The data shown above reflects typical results based on laboratory testing under controlled conditions. Reasonable variations from the data shown above may result.

CONSIDERATIONS & LIMITATIONS

1. Do not install in thicknesses greater than 1/2" in one application.
2. Unlike epoxies, PolySpec 731 does not build up heat until after the initial set has occurred, making his product well suited for use on horizontal and vertical surfaces.
3. Do not thin with solvents unless advised to do so by PolySpec.
4. Confirm product performance in specific chemical environment prior to use.
5. Prepare substrate according to "Surface Preparation" portion of this document.
6. Always use protective clothing, gloves and goggles consistent with OSHA regulations during use. Avoid eye and skin contact. Do not ingest or inhale. Refer to Material Safety Data Sheet for detailed safety precautions.
7. For industrial/commercial use. Installation by trained personnel only.

BENEFITS

- *Anti-sag formula*
- *Long recoat times*
- *Ease of application*
- *Suited for horizontal and vertical surfaces*

RECOMMENDED USES

- *Round the corner radius at vertical to horizontal transitions*
  - *concrete walls and pedestals*
  - *steel tank chimes*
- *Smooth welds*
- *Fill small pits and voids in concrete*
- *General purpose patching*

GENERIC DESCRIPTION

Polyester Putty

STANDARD COLORS

Amber

PACKAGING

5-Gallon Unit

COVERAGE

231 in^3 / gallon

6 ft^2 / gallon @ 1/4" thickness

6614 GANT ROAD • HOUSTON, TEXAS 77066 • TEL: 281-397-0033 • FAX: 281-397-6512
www.polyspec.com

PolySpec

SURFACE PREPARATION

Concrete: Apply only to clean, dry and sound concrete substrates that are free of all coatings, sealers, curing compounds, oils, greases or any other contaminants.

- *New concrete should be cured a minimum of 28 days.*
- *Concrete that has been contaminated with chemicals or other foreign matter must be neutralized or removed.*
- *Remove any laitance or weak surface layers.*
- *Concrete should have a minimum surface tensile strength of at least 300 PSI per ASTM D-4541.*
- *Surface profile shall be CSP-3 to CSP-5 meeting ICRI (International Concrete Repair Institute) standard guideline #03732 for coating concrete, producing a profile equal to 60-grit sandpaper or coarser. Prepare surface by mechanical means to achieve this desired profile.*
- *Moisture vapor transmission should be 3 pounds or less per 1,000 square feet over a 24 hour time period, as confirmed through a calcium chloride test, as per ASTM E-1907. Quantitative relative humidity (RH) testing, ASTM F-2170, should confirm concrete RH results <75%.*

Steel: For immersion service, "White Metal" abrasive blast with an anchor profile of 2–4 mils in accordance with Steel Structures Painting Council Specification SP-5-63 or NACE No. 1 is required. For splash and spillage exposure, "Near White" SP-10-63 or NACE No. 2 is required.

Refer to PolySpec Surface Preparation Guidelines for more details.

INSTALLATION STEPS

1. Prime surface with PolySpec 310 or 320 Primer. See data sheet for installation instructions.
2. Pour clear catalyst Hardener #1 into putty container. Stir well for one minute using a mechanical jiffy-type mixer operated at low speed.

   For best results (due to pot life), mix small quantities of PolySpec 731 at a time.

MIX RATIO	
• PolySpec 731 Putty	1 gallon
• Hardener #1	2 ounces

3. Trowel material onto surface using a spatula, putty knife or trowel.

   NOTE: Do not install in thicknesses greater than 1/2" in one application.
4. To smooth the surface, lightly brush the putty with a brush dipped in PolySpec Smoothing Liquid #1.

   NOTE: Some shrinkage may occur.
5. A second coat can be applied up to 72 hours after the first application.

   NOTE: Minimum recoat time is 2 hours @ 75°F.
6. For best results, clean tools and equipment with PolySpec® All Purpose Cleaner, a nonflammable and non-evaporating cleaner. Always wear gloves when using this product.

1gal Putty : 2 oz H / DOC PS731-TDS

Rev 03/05

PolySpec is a ® Registered Trademark of PolySpec L.P.

© Copyright 2005 PolySpec L.P. All rights reserved. Published technical data and instructions are subject to change without notice. Please visit the online catalog at www.polyspec.com for the most current technical data and instructions. Or, you may contact your PolySpec representative for current technical data and instructions.

PolySpec, L.P. warrants its products to be free from defects in material and workmanship. PolySpec's sole obligation and Buyer's exclusive remedy in connection with the products shall be limited, at PolySpec's option, to either replacement of products not conforming to this warranty or credit to Buyer's account in the invoiced amount of the nonconforming products. Any claim under this Warranty must be made by Buyer to PolySpec in writing within five days of Buyer's discovery of the claimed defect, but in no event later than the expiration of the applicable shelf life, or one year from the delivery date, whichever is earlier. Buyer's failure to notify PolySpec of such nonconformance as required herein shall bar Buyer from recovery under this warranty.

PolySpec makes no other warranties concerning this product. No other warranties, either expressed or implied, or statutory, such as warranties of merchantability or fitness for a particular purpose, shall apply. In no event shall PolySpec be liable for consequential or incidental damages.

Any recommendation or suggestion relating to the use of the products made by PolySpec, whether in its technical literature, or in response to specific inquiry, or otherwise, is based on data believed to be reliable; however, the products and information are intended for use by Buyers having requisite skill and know-how in the industry, and therefore it is for the Buyer to satisfy itself of the suitability of the products for its own particular use, and it shall be deemed that Buyer has done so, at its sole discretion and risk. Variation in environment, changes of procedures of use, or extrapolation of data may cause unsatisfactory results. PolySpec cannot guarantee that color will conform to sample, if provided.

GENERAL SPECIFICATION FOR LINING STEEL TANKS WITH PERMAREZ[7] 333 CHEMICAL RESISTANT LINING

1.0 General

1.1 This specification covers the minimum requirements for installing PermaRez 333 Lining to the interior surfaces of steel tanks. Application should be done in accordance with this guideline by contractors qualified in installing this product.

1.2 A qualified contractor is defined as one with 1) a minimum of five years of experience in installing similar systems, 2) demonstrated financial stability in warranting work and 3) certification by PolySpec Corporation.

1.3 The work to be performed shall include furnishing of all labor, materials, tools and equipment required for lining all steel surfaces as outlined in this specification.

2.0 References

2.1 National Association of Corrosion Engineers (NACE):

NACE Standard RP0178-91 - Fabrication Details, Surface Finish Requirements, and Proper Design Considerations for Tanks and Vessels to be Lined for Immersion Service.

NACE Standard RP0188-90 - Discontinuity (Holiday) Testing of Protective Coatings.

NACE Standard RP0287-91 - Field Measurement of Surface Profile of Abrasive Blast Cleaned Steel Surfaces Using a Replica Tape.

NACE Standard RP0288-94 - Inspection of Linings on Steel and Concrete.

NACE Standard TM0170-70 - Visual Standards for Surfaces of New Steel Air Blast Cleaned with Sand Abrasive.

NACE No. 1 - White Metal Blast Cleaning.

2.2 Steel Structures Painting Council (SSPC):

SSPC-VIS-1-89 - Visual Standard for Abrasive Blast Cleaned Steel.

SSPC-SP 5 - White Metal Blast Cleaning.

3.0 Materials

Materials shall be manufactured by PolySpec Corporation (Phone 281-397-0033; Fax 281-397-6512) as indicated below:

3.1 PermaRez 333 Lining Resin

A pre-promoted vinyl ester novolac resin for saturating fiberglass and synthetic veils.

3.2 PermaRez 333 Topcoat Resin

A pre-promoted vinyl ester novolac resin containing a wax solution used for topcoating.

3.3 PolySpec[7] 300 Primer

A 10% high elongation vinyl ester primer with a minimum tensile bond to carbon steel of 1300 psi.

3.4 PolySpec[7] 730 Pre-Surfacer

A silica filled coating used for filling small holes and pits in steel surfaces prior to lining.

3.5 PolySpec[7] 731 Putty

A very high viscosity silica filled polyester putty for application to chime area and for smoothing welds prior to lining.

3.6 Fiberglass Chopped Strand Mat and Woven Roving

Reinforcement used with lining resin to provide high tensile strength.

3.7 Hardener #1

Methyl Ethyl Ketone Peroxide catalyst for the above resin systems. Hardener should be added at 1-1/2 to 2 oz. per gallon of resin product.

4.0 Delivery and Storage

4.1 All lining materials shall be delivered to the jobsite in their original, unopened containers with the proper, fully legible labels attached. Damaged containers shall be set apart and returned to the manufacturer for replacement.

4.2 Whenever possible, the work area and mixing area should be covered from exposure to direct sunlight. Due to limited shelf life, materials should be stored in their tightly sealed original containers in a dry place at temperatures between 65 and 80° F. Materials hall be used soon after containers have been opened. Shelf life for PermaRez 333 is 30 days from date of manufacture. Lining materials should only be applied at temperatures between 50 and 95° F.

5.0 Safety and Tank Preparation

5.1 All the preparation and application steps in this guideline specification shall be in accordance with manufacturer's MSDS instructions as well as Owner's site conditions and applicable Federal, state, and local rules and regulations.

5.2 Precautions should be taken when working with styrene based materials. Use materials only in adequately ventilated areas, keep away from open flames, and store in dry, covered areas. Organic peroxides are extremely volatile and shall be stored in a special location away from sources of heat.

5.3 Workers should always wear protective clothing, gloves and eyewear when working with these products. Respiratory protection is required.

5.4 Tanks shall be disconnected, commercially cleaned, and freed of gas below toxic and explosive limits by Owner.

5.5 The tank shall be well ventilated and equipped with sufficient explosion-proof equipment to remove dust and fumes from the tank interior.

5.6 All interior lighting shall be explosion-proof. All electrical equipment shall employ a ground fault interrupter.

5.7 Dehumidification equipment is required when working with vinyl ester resin based materials.

6.0 Tank Fabrication Requirements

6.1 Internal stiffeners and brackets shall be made of pipes and rods instead of angles and channels.

6.2 Internal welds shall be continuous but not necessarily smooth.

6.3 All sharp corners and edges of internal structural members shall be rounded

to a radius of 1/8" minimum.

6.4 Flanged connections should not be under 2" in diameter.

6.5 Small diameter nozzle inserts made of vinyl ester fiberglass reinforced material shall be provided and installed by the contractor.

7.0 Surface Preparation

7.1 All weld splatter shall be removed, and all burrs and sharp edges shall be ground down.

7.2 Surfaces to be lined shall be blasted to a SSPC-SP 5 or NACE No. 1 "White Metal" blast.

7.3 An anchor mil profile of 2-1/2-3 mils is required.

7.4 A non-silica grit, such as Black Beauty, is required (except boiler slag).

7.5 All traces of abrasive media and dust shall be removed after blasting.

8.0 Application

8.1 Priming. The blasted surface shall be primed before the surface begins to form rust. If rust begins to form, the surface shall be re-blasted. Apply one coat of PolySpec[7] 300 Primer by spray or roller. Primer resin is catalyzed by adding 1-1/2 to 2 oz. of Hardener #1 to a gallon of resin. Working time is limited, so the primer should be quickly applied. Recommended primer thickness is about 2-4 mils. Contractor shall take care to avoid excessive build-up of primer.

8.2 Putty. PolySpec[7] 731 Putty shall be catalyzed and applied by putty knife to the following areas:

a. Small pits, depressions and imperfections.

b. Welded plates, protrusions and lap joints (to smooth the surface transition).

c. The chime area to form a smooth radius.

d. Any riveted seams, where applicable.

8.3 Laminating Resin. Lining application may proceed once the primer is dry to the touch (usually after 6-8 hours at 70° F.) If the lining is delayed longer than three days, the surface may have to be re-primed.

The lay-up operation shall proceed as follows:

a. Cut two or three layers of chopped strand mat. Allowances shall be made for staggered joints with at least a 2" overlap.

b. Catalyze the resin with Hardener #1 at a rate of 1-1/2 to 2 oz./gallon of resin. Mix well.

c. Apply a heavy coat of catalyzed resin onto the surface by roller or spray.

d. Lay a fiberglass mat into the wet resin. Press the mat out using a serrated roller. All mat fibers shall be wetted out so that the whiteness of the mat disappears. Repeat until three bubble-free layers of chopped strand mat have been installed in one application.

e. Care should be taken that the mat is neither too dry nor too resin rich.

Each section of fiberglass shall overlap the next section by at least 3".

The bottom lay-up operation shall proceed with successive parallel courses with a 3" overlap.

8.4 Topcoat. A final topcoat shall be applied by roller or spray to all lined surfaces. This acts as a sealer to prevent air from inhibiting the ultimate cure. The entire lined area should be reinspected as outlined below. Patches can be made to the topcoat without grinding down the resin topcoat.

9.0 Inspection/Quality Assurance

9.1 There will be a pre-job meeting attended by all personnel including Owner, Contractor/Subcontractor, Safety Engineer, Inspector and Lining Manufacturer Representative.

9.2 All inspections shall be recorded and shall include the following information:

Date and time of day
Weather conditions (air and surface, humidity)
Description of surface preparation
Thicknesses per coat
Visual inspection of workmanship

9.3 Application temperature shall be at least 5 degrees above the dew point.

9.4 The Contractor shall take mil profile readings at periodic intervals during the blasting process.

9.5 After lamination, the entire lined surface should be inspected for defects such as resin puddling, wrinkles, burrs, bubbles and uncured resin.

9.6 The Contractor shall randomly test the lining thickness with a dry film mil gauge. Total dry film thickness is a minimum of 100 mils.

9.7 To test curability of the lining, the Contractor shall randomly test the surface hardness with a Barcol Hardness Tester. The lining should show a minimum reading of 30 after 24 hours of curing and 40 after five to seven days of curing.

9.8 Pinholes in the lining should be detected using a Holiday Detector set at a minimum of 10,000 volts or 100 volts/mil.

9.9 Defects in the lining shall be repaired with a patch of the resin/fiberglass lining that extends at least 3" over the patched area. The patch should be applied using the same techniques as outlined above. Where it is necessary to cut into the lining to remove an inferior section, the depression should be filled with putty prior to the application of the patch.

9.10 Retest all patched areas following the above steps.

10.0 Warranty

10.1 Manufacturer shall warrant that its products are free from defects. Manufacturer shall provide a materials warranty to the Owner for a period of one year from date of manufacture. Liability, if any, is limited to product replacement.

10.2 Manufacturer and contractor may also provide a joint warranty for product installation for a period of one year from date of installation. The contract shall specifically stipulate what constitutes a failure of the coating system and the operating conditions for the coating system. Liability, if any, for the manufacturer is limited to product replacement and, for the contractor, re-installation costs. This warranty specifically excludes liabilities for consequential or incidental damages.

Industrial & Marine Coatings

4.53 MACROPOXY® 646 FAST CURE EPOXY

PART A B58-600
PART B B58V600

SERIES
HARDENER

PRODUCT INFORMATION

Revised 9/07

PRODUCT DESCRIPTION

MACROPOXY 646 FAST CURE EPOXY is a high solids, high build, fast drying, polyamide epoxy designed to protect steel and concrete in industrial exposures. Ideal for maintenance painting and fabrication shop applications. The high solids content ensures adequate protection of sharp edges, corners, and welds. This product can be applied directly to marginally prepared steel surfaces.

- Low VOC
- Low odor
- Chemical resistant
- Abrasion resistant

RECOMMENDED USES

- Marine applications
- Fabrication shops
- Pulp and paper mills
- Power plants
- Offshore platforms
- Refineries
- Chemical plants
- Tank exteriors
- Water treatment plants
- Mill White and Black are acceptable for immersion use for salt water and fresh water, not acceptable for potable water
- Suitable for use in USDA inspected facilities

Conforms to AWWA D102-03 OCS #5

PRODUCT CHARACTERISTICS

Finish: Semi-Gloss

Color: Mill White, Black and a wide range of colors available through tinting

Volume Solids: Mill White — 72% ± 2%, mixed

Weight Solids: Mill White — 85% ± 2%, mixed

VOC (EPA Method 24): mixed
Unreduced: <250 g/L; 2.08 lb/gal
Reduced 10%: <300 g/L; 2.50 lb/gal

Mix Ratio: 1:1 by volume

Recommended Spreading Rate per coat:

Wet mils:	7.0 - 13.5
Dry mils:	5.0 - 10.0*
Coverage:	116 - 232 sq ft/gal approximate

NOTE: Brush or roll application may require multiple coats to achieve maximum film thickness and uniformity of appearance.
* See Recommended Systems

Drying Schedule @ 7.0 mils wet and 50% RH:

	@ 40°F	@ 77°F	@ 100°F
To touch:	4-5 hours	2 hours	1½ hours
To handle:	48 hours	8 hours	4½ hours
To recoat:			
minimum:	48 hours	8 hours	4½ hours
maximum:	1 year	1 year	1 year
Cure for			
service:	10 days	7 days	4 days
immersion:	14 days	7 days	4 days

If maximum recoat time is exceeded, abrade surface before recoating.
Drying time is temperature, humidity and film thickness dependent.

Pot Life:	10 hours	4 hours	2 hours
Sweat-in-time:	30 minutes	30 minutes	15 minutes

Shelf Life: 36 months, unopened
Store indoors at 40°F to 100°F.

Flash Point: 91°F, TCC, mixed

Reducer/Clean Up: Reducer, R7K15
In California: Reducer R7K111 or Oxsol 100

PERFORMANCE CHARACTERISTICS

System Tested: (unless otherwise indicated)
Substrate: Steel
Surface Preparation: SSPC-SP10
1 ct. Macropoxy 646 Fast Cure @ 6.0 mils dft

Abrasion Resistance:
Method: ASTM D4060, CS17 wheel, 1000 cycles, 1 kg load
Result: 84 mg loss

Accelerated Weathering - QUV, Zinc Clad II Plus Primer:
Method: ASTM D4587, QUV-A, 12,000 hours
Results: passes

Adhesion:
Method: ASTM D4541
Result: 1,037 psi

Corrosion Weathering, Zinc Clad II Plus Primer:
Method: ASTM D5894, 36 cycles, 12,000 hours
Result: Rating 10 per ASTM D714 for blistering
Rating 9 per ASTM D610 for rusting

Direct Impact Resistance:
Method: ASTM D2794
Result: 30 in. lb.

Dry Heat Resistance:
Method: ASTM D2485
Result: 250°F

Exterior Durability:
Method: 1 year at 45° South
Result: Excellent, chalks

Flexibility:
Method: ASTM D522, 180° bend, 3/4" mandrel
Result: Passes

Humidity Resistance
Method: ASTM D4585, 6000 hrs
Result: No blistering, cracking, or rusting

Immersion:
Method: 1 year fresh and salt water
Result: Passes, no rusting, blistering, or loss of adhesion

Irradiation-Effects on Coatings used in Nuclear Power Plants
Method: ANSI 5.12 / ASTM D4082-89
Result: Passes

Pencil Hardness:
Method: ASTM D3363
Result: 3H

Water Vapor Permeance:
Method: ASTM D1653, Method B
Result: 1.16 US perms

Salt Fog Resistance, Zinc Clad II Plus Primer::
Method: ASTM B117, 6,500 hours
Result: Rating 10 per ASTM D610 for rusting
Rating 9 per ASTM D1654 for corrosion

Slip Coefficient, Mill White:
Method: AISC Specification for Structural Joints Using ASTM A325 or ASTM A490 Bolts
Result: Class A, 0.36

Epoxy coatings may darken or discolor following application and curing.

continued on back

Industrial & Marine Coatings

4.53 MACROPOXY® 646 FAST CURE EPOXY

PART A B58-600
PART B B58V600

SERIES
HARDENER

PRODUCT INFORMATION

RECOMMENDED SYSTEMS

Immersion and atmospheric:

Steel:
2 cts. Macropoxy 646 @ 5.0 - 10.0 mils dft/ct

Concrete/Masonry, smooth:
2 cts. Macropoxy 646 @ 5.0 - 10.0 mils dft/ct

Concrete Block:
1 ct. Kem Cati-Coat HS Epoxy Filler/Sealer @ 10.0 - 20.0 mils dft, as needed to fill voids and provide a continuous substrate.
2 cts. Macropoxy 646 @ 5.0 - 10.0 mils dft/ct

Atmospheric:
***Steel:**
(Shop applied system, new construction, AWWA D102-03, can also be used at 3 mils minimum dft when used as an intermediate coat as part of a multi-coat system)
1 ct. Macropoxy 646 Fast Cure Epoxy @ 3.0 - 6.0 mils dft
1-2 cts. of recommended topcoat

Steel:
1 ct. Recoatable Epoxy Primer @ 4.0 - 6.0 mils dft
2 cts. Macropoxy 646 @ 5.0 - 10.0 mils dft/ct

***Steel:**
1 ct. Macropoxy 646 @ 4.0 - 6.0 mils dft
1-2 cts. Acrolon 218 Polyurethane @ 3.0 - 6.0 mils dft/ct
or Hi-Solids Polyurethane @ 3.0 - 5.0 mils dft/ct
or SherThane 2K Urethane @ 2.0 - 4.0 mils dft/ct

Steel:
2 cts. Macropoxy 646 @ 5.0 - 10.0 mils dft/ct
1-2 cts. Tile-Clad HS Epoxy @ 2.5 - 4.0 mils dft/ct

Steel:
1 ct. Zinc Clad II Plus @ 3.0 - 6.0 mils dft
1 ct. Macropoxy 646 @ 5.0 - 10.0 mils dft
1-2 cts. Acrolon 218 Polyurethane @ 3.0 - 6.0 mils dft/ct

Steel:
1 ct. Zinc Clad III HS @ 3.0 - 5.0 mils dft
or Zinc Clad IV @ 3.0 - 5.0 mils dft
1 ct. Macropoxy 646 @ 5.0 - 10.0 mils dft
1-2 cts. Acrolon 218 Polyurethane @ 3.0 - 6.0 mils dft/ct

Aluminum:
2 cts. Macropoxy 646 @ 5.0 - 10.0 mils dft/ct

Galvanizing:
2 cts. Macropoxy 646 @ 5.0 - 10.0 mils dft/ct

The systems listed above are representative of the product's use. Other systems may be appropriate.

SURFACE PREPARATION

Surface must be clean, dry, and in sound condition. Remove all oil, dust, grease, dirt, loose rust, and other foreign material to ensure good adhesion.
Refer to product Application Bulletin for detailed surface preparation information.
Minimum recommended surface preparation:

Iron & Steel	
Atmospheric:	SSPC-SP2/3
Immersion:	SSPC-SP10/NACE 2, 2-3 mil profile
Aluminum:	SSPC-SP1
Galvanizing:	SSPC-SP1
Concrete & Masonry	
Atmospheric:	SSPC-SP13/NACE 6, or ICRI 03732, CSP 1-3
Immersion:	SSPC-SP13/NACE 6-4.3.1 or 4.3.2, or ICRI 03732, CSP 1-3

TINTING

Tint Part A with 844 Colorants at 150% strength. Five minutes minimum mixing on a mechanical shaker is required for complete mixing of color.

Tinting is not recommended for immersion service.

APPLICATION CONDITIONS

Temperature:	40°F minimum, 140°F maximum (air, surface, and material)
	At least 5°F above dew point
Relative humidity:	85% maximum

Refer to product Application Bulletin for detailed application information.

ORDERING INFORMATION

Packaging:	
Part A:	1 and 5 gallon containers
Part B:	1 and 5 gallon containers
Weight per gallon:	12.9 ± 0.2 lb mixed, may vary by color

SAFETY PRECAUTIONS

Refer to the MSDS sheet before use.

Published technical data and instructions are subject to change without notice. Contact your Sherwin-Williams representative for additional technical data and instructions.

DISCLAIMER

The information and recommendations set forth in this Product Data Sheet are based upon tests conducted by or on behalf of The Sherwin-Williams Company. Such information and recommendations set forth herein are subject to change and pertain to the product offered at the time of publication. Consult your Sherwin-Williams representative to obtain the most recent Product Data Information and Application Bulletin.

WARRANTY

The Sherwin-Williams Company warrants our products to be free of manufacturing defects in accord with applicable Sherwin-Williams quality control procedures. Liability for products proven defective, if any, is limited to replacement of the defective product or the refund of the purchase price paid for the defective product as determined by Sherwin-Williams. NO OTHER WARRANTY OR GUARANTEE OF ANY KIND IS MADE BY SHERWIN-WILLIAMS, EXPRESSED OR IMPLIED, STATUTORY, BY OPERATION OF LAW OR OTHERWISE, INCLUDING MERCHANTABILITY AND FITNESS FOR A PARTICULAR PURPOSE.

Industrial & Marine Coatings

4.53A MACROPOXY® 646 FAST CURE EPOXY

PART A B58-600
PART B B58V600

SERIES
HARDENER

APPLICATION BULLETIN

Revised 9/07

SURFACE PREPARATION

Surface must be clean, dry, and in sound condition. Remove all oil, dust, grease, dirt, loose rust, and other foreign material to ensure adequate adhesion.

Iron & Steel, Atmospheric Service:
Minimum surface preparation is Hand Tool Clean per SSPC-SP2. Remove all oil and grease from surface by Solvent Cleaning per SSPC-SP1. For better performance, use Commercial Blast Cleaning per SSPC-SP6/NACE 3, blast clean all surfaces using a sharp, angular abrasive for optimum surface profile (2 mils). Prime any bare steel within 8 hours or before flash rusting occurs.

Iron & Steel, Immersion Service:
Remove all oil and grease from surface by Solvent Cleaning per SSPC-SP1. Minimum surface preparation is Near White Metal Blast Cleaning per SSPC-SP10/NACE 2. Blast clean all surfaces using a sharp, angular abrasive for optimum surface profile (2-3 mils). Remove all weld spatter and round all sharp edges by grinding. Prime any bare steel the same day as it is cleaned.

Aluminum
Remove all oil, grease, dirt, oxide and other foreign material by Solvent Cleaning per SSPC-SP1.

Galvanized Steel
Allow to weather a minimum of six months prior to coating. Solvent Clean per SSPC-SP1 (recommended solvent is VM&P Naphtha). When weathering is not possible, or the surface has been treated with chromates or silicates, first Solvent Clean per SSPC-SP1 and apply a test patch. Allow paint to dry at least one week before testing adhesion. If adhesion is poor, brush blasting per SSPC-SP7 is necessary to remove these treatments. Rusty galvanizing requires a minimum of Hand Tool Cleaning per SSPC-SP2, prime the area the same day as cleaned.

Concrete and Masonry, Atmospheric Service:
For surface preparation, refer to NACE 6/SSPC-SP13, or ICRI 03732, CSP 1-3. Surfaces should be thoroughly clean and dry. Concrete and mortar must be cured at least 28 days @ 75°F. Remove all loose mortar and foreign material. Surface must be free of laitance, concrete dust, dirt, form release agents, moisture curing membranes, loose cement and hardeners. Fill bug holes, air pockets and other voids with a cement patching compound. Weathered masonry and soft or porous cement board must be brush blasted or power tool cleaned to remove loosely adhering contamination and to get to a hard, firm surface. Laitance must be removed by etching with a 10% muriatic acid solution and thoroughly neutralized with water.

Concrete and Masonry, Immersion Service:
For surface preparation, refer to SSPC-SP13/NACE 6, Section 4.3.1 or 4.3.2, or ICRI 03732, CSP 1-3.

Previously Painted Surfaces
If in sound condition, clean the surface of all foreign material. Smooth, hard or glossy coatings and surfaces should be dulled by abrading the surface. Apply a test area, allowing paint to dry one week before testing adhesion. If adhesion is poor, or if this product attacks the previous finish, removal of the previous coating may be necessary. If paint is peeling or badly weathered, clean surface to sound substrate and treat as a new surface as above.

APPLICATION CONDITIONS

Temperature:	40°F minimum, 140°F maximum (air, surface, and material) At least 5°F above dew point
Relative humidity:	85% maximum

APPLICATION EQUIPMENT

The following is a guide. Changes in pressures and tip sizes may be needed for proper spray characteristics. Always purge spray equipment before use with listed reducer. Any reduction must be compliant with existing VOC regulations and compatible with the existing environmental and application conditions.

Reducer/Clean Up ..... Reducer R7K15
In California ..... Reducer R7K111

Airless Spray
Pump 30:1
Pressure ..... 2800 - 3000 psi
Hose ..... 1/4" ID
Tip ..... .017" - .023"
Filter ..... 60 mesh
Reduction ..... As needed up to 10% by volume

Conventional Spray
Gun ..... DeVilbiss MBC-510
Fluid Tip ..... E
Air Nozzle 704
Atomization Pressure .. 60-65 psi
Fluid Pressure ..... 10-20 psi
Reduction ..... As needed up to 10% by volume
Requires oil and moisture separators

Brush
Brush ..... Nylon/Polyester or Natural Bristle
Reduction ..... Not recommended

Roller
Cover ..... 3/8" woven with phenolic core
Reduction ..... Not recommended

If specific application equipment is listed above, equivalent equipment may be substituted.

continued on back

Industrial & Marine Coatings

4.53A

MACROPOXY® 646 FAST CURE EPOXY

PART A B58-600
PART B B58V600 SERIES HARDENER

APPLICATION BULLETIN

APPLICATION PROCEDURES

Surface preparation must be completed as indicated.

Mix contents of each component thoroughly with power agitation. Make certain no pigment remains on the bottom of the can. Then combine one part by volume of Part A with one part by volume of Part B. Thoroughly agitate the mixture with power agitation. Allow the material to sweat-in as indicated prior to application. Re-stir before using.

If reducer solvent is used, add only after both components have been thoroughly mixed, after sweat-in.

Apply paint to the recommended film thickness and spreading rate as indicated below:

Recommended Spreading Rate per coat:

Wet mils:	7.0 - 13.5
Dry mils:	5.0 - 10.0*
Coverage:	116 - 232 sq ft/gal approximate

NOTE: Brush or roll application may require multiple coats to achieve maximum film thickness and uniformity of appearance.
* See Recommended Systems

Drying Schedule @ 7.0 mils wet and 50% RH:

	@ 40°F	@ 77°F	@ 100°F
To touch:	4-5 hours	2 hours	1½ hours
To handle:	48 hours	8 hours	4½ hours
To recoat:			
minimum:	48 hours	8 hours	4½ hours
maximum:	1 year	1 year	1 year
Cure for			
service:	10 days	7 days	4 days
immersion:	14 days	7 days	4 days

If maximum recoat time is exceeded, abrade surface before recoating.
Drying time is temperature, humidity and film thickness dependent.

Pot Life:	10 hours	4 hours	2 hours
Sweat-In-time:	30 minutes	30 minutes	15 minutes

Application of coating above maximum or below minimum recommended spreading rate may adversely affect coating performance.

PERFORMANCE TIPS

Stripe coat all crevices, welds, and sharp angles to prevent early failure in these areas.

When using spray application, use a 50% overlap with each pass of the gun to avoid holidays, bare areas, and pinholes. If necessary, cross spray at a right angle

Spreading rates are calculated on volume solids and do not include an application loss factor due to surface profile, roughness or porosity of the surface, skill and technique of the applicator, method of application, various surface irregularities, material lost during mixing, spillage, overthinning, climatic conditions, and excessive film build.

Excessive reduction of material can affect film build, appearance, and adhesion.

Do not mix previously catalyzed material with new.

Do not apply the material beyond recommended pot life.

In order to avoid blockage of spray equipment, clean equipment before use or before periods of extended downtime with Reducer R7K15. In California use Reducer R7K111.

Tinting is not recommended for immersion service.

Use only Mil White and Black for immersion service.

Quik-Kick Epoxy Accelerator is acceptable for use. See data page 4.99 for details.

Refer to Product Information sheet for additional performance characteristics and properties.

CLEAN UP INSTRUCTIONS

Clean spills and spatters immediately with Reducer R7K15. Clean tools immediately after use with Reducer R7K15. In California use Reducer R7K111. Follow manufacturer's safety recommendations when using any solvent.

SAFETY PRECAUTIONS

Refer to the MSDS sheet before use.

Published technical data and instructions are subject to change without notice. Contact your Sherwin-Williams representative for additional technical data and instructions.

MATERIAL SAFETY DATA SHEET

B58W610
12 00

DATE OF PREPARATION
Mar 26, 2009

SECTION 1 — PRODUCT AND COMPANY IDENTIFICATION

PRODUCT NUMBER
B58W610
PRODUCT NAME
MACROPOXY® 646 Fast Cure Epoxy Coating (Part A), Mill White
MANUFACTURER'S NAME
THE SHERWIN-WILLIAMS COMPANY
101 Prospect Avenue N.W.
Cleveland, OH 44115

Telephone Numbers and Websites

Product Information	www.sherwin-williams.com
Regulatory Information	(216) 566-2902 www.paintdocs.com
Medical Emergency	(216) 566-2917
Transportation Emergency*	(800) 424-9300
**for Chemical Emergency ONLY (spill, leak, fire, exposure, or accident)*	

SECTION 2 — COMPOSITION/INFORMATION ON INGREDIENTS

% by Weight	CAS Number	Ingredient	Units	Vapor Pressure
3	100-41-4	**Ethylbenzene**		
		ACGIH TLV	100 PPM	7.1 mm
		ACGIH TLV	125 PPM STEL	
		OSHA PEL	100 PPM	
		OSHA PEL	125 PPM STEL	
15	1330-20-7	**Xylene**		
		ACGIH TLV	100 PPM	5.9 mm
		ACGIH TLV	150 PPM STEL	
		OSHA PEL	100 PPM	
		OSHA PEL	150 PPM STEL	
11	68410-23-1	**Polyamide**		
		ACGIH TLV	Not Available	
		OSHA PEL	Not Available	
9	14807-96-6	**Talc**		
		ACGIH TLV	2 mg/m3 as Resp. Dust	
		OSHA PEL	2 mg/m3 as Resp. Dust	
31	13463-67-7	**Titanium Dioxide**		
		ACGIH TLV	10 mg/m3 as Dust	
		OSHA PEL	10 mg/m3 Total Dust	
		OSHA PEL	5 mg/m3 Respirable Fraction	

SECTION 3 — HAZARDS IDENTIFICATION

ROUTES OF EXPOSURE
INHALATION of vapor or spray mist.
EYE or SKIN contact with the product, vapor or spray mist.

HMIS Codes

Health	3*
Flammability	3
Reactivity	0

EFFECTS OF OVEREXPOSURE
EYES: Irritation.
SKIN: Prolonged or repeated exposure may cause irritation.
INHALATION: Irritation of the upper respiratory system.

May cause nervous system depression. Extreme overexposure may result in unconsciousness and possibly death.
Prolonged overexposure to solvent ingredients in Section 2 may cause adverse effects to the liver, urinary and reproductive systems.

SIGNS AND SYMPTOMS OF OVEREXPOSURE
Headache, dizziness, nausea, and loss of coordination are indications of excessive exposure to vapors or spray mists.
Redness and itching or burning sensation may indicate eye or excessive skin exposure.

MEDICAL CONDITIONS AGGRAVATED BY EXPOSURE
May cause allergic skin reaction in susceptible persons or skin sensitization.
CANCER INFORMATION
For complete discussion of toxicology data refer to Section 11.

SECTION 4 — FIRST AID MEASURES

EYES: Flush eyes with large amounts of water for 15 minutes. Get medical attention.
SKIN: Wash affected area thoroughly with soap and water.
Remove contaminated clothing and launder before re-use.
INHALATION: If affected, remove from exposure. Restore breathing. Keep warm and quiet.
INGESTION: Do not induce vomiting. Get medical attention immediately.

SECTION 5 — FIRE FIGHTING MEASURES

FLASH POINT	LEL	UEL	FLAMMABILITY CLASSIFICATION
85 °F PMCC	1.0	7.0	RED LABEL -- Flammable, Flash below 100 °F (38 °C)

EXTINGUISHING MEDIA
Carbon Dioxide, Dry Chemical, Foam
UNUSUAL FIRE AND EXPLOSION HAZARDS
Closed containers may explode when exposed to extreme heat.
Application to hot surfaces requires special precautions.
During emergency conditions overexposure to decomposition products may cause a health hazard. Symptoms may not be immediately apparent. Obtain medical attention.
SPECIAL FIRE FIGHTING PROCEDURES
Full protective equipment including self-contained breathing apparatus should be used.
Water spray may be ineffective. If water is used, fog nozzles are preferable. Water may be used to cool closed containers to prevent pressure build-up and possible autoignition or explosion when exposed to extreme heat.

SECTION 6 — ACCIDENTAL RELEASE MEASURES

STEPS TO BE TAKEN IN CASE MATERIAL IS RELEASED OR SPILLED
- Remove all sources of ignition. Ventilate the area.
- Remove with inert absorbent.

SECTION 7 — HANDLING AND STORAGE

STORAGE CATEGORY
DOL Storage Class IC
PRECAUTIONS TO BE TAKEN IN HANDLING AND STORAGE
Contents are FLAMMABLE. Keep away from heat, sparks, and open flame.
During use and until all vapors are gone: Keep area ventilated - Do not smoke - Extinguish all flames, pilot lights, and heaters - Turn off stoves, electric tools and appliances, and any other sources of ignition.
Consult NFPA Code. Use approved Bonding and Grounding procedures.
Keep container closed when not in use. Transfer only to approved containers with complete and appropriate labeling. Do not take internally. Keep out of the reach of children.

SECTION 8 — EXPOSURE CONTROLS/PERSONAL PROTECTION

PRECAUTIONS TO BE TAKEN IN USE
Use only with adequate ventilation.
Avoid contact with skin and eyes. Avoid breathing vapor and spray mist.
Wash hands after using.
This coating may contain materials classified as nuisance particulates (listed "as Dust" in Section 2) which may be present at hazardous levels only during sanding or abrading of the dried film. If no specific dusts are listed in Section 2, the applicable limits for nuisance dusts are ACGIH TLV 10 mg/m3 (total dust), 3 mg/m3 (respirable fraction), OSHA PEL 15 mg/m3 (total dust), 5 mg/m3 (respirable fraction).
VENTILATION
Local exhaust preferable. General exhaust acceptable if the exposure to materials in Section 2 is maintained below applicable exposure limits. Refer to OSHA Standards 1910.94, 1910.107, 1910.108.
RESPIRATORY PROTECTION
If personal exposure cannot be controlled below applicable limits by ventilation, wear a properly fitted organic vapor/particulate respirator approved by NIOSH/MSHA for protection against materials in Section 2.
When sanding or abrading the dried film, wear a dust/mist respirator approved by NIOSH/MSHA for dust which may be generated from this product, underlying paint, or the abrasive.
PROTECTIVE GLOVES
Wear gloves which are recommended by glove supplier for protection against materials in Section 2.
EYE PROTECTION
Wear safety spectacles with unperforated sideshields.

OTHER PRECAUTIONS

This product must be mixed with other components before use. Before opening the packages, READ AND FOLLOW WARNING LABELS ON ALL COMPONENTS.

Intentional misuse by deliberately concentrating and inhaling the contents can be harmful or fatal.

SECTION 9 — PHYSICAL AND CHEMICAL PROPERTIES

PRODUCT WEIGHT	12.19 lb/gal	1460 g/l
SPECIFIC GRAVITY	1.47	
BOILING POINT	277 - 292 °F	136 - 144 °C
MELTING POINT	Not Available	
VOLATILE VOLUME	29%	
EVAPORATION RATE	Slower than ether	
VAPOR DENSITY	Heavier than air	
SOLUBILITY IN WATER	N.A.	

VOLATILE ORGANIC COMPOUNDS (VOC Theoretical - As Packaged)

2.11lb/gal	253g/l	Less Water and Federally Exempt Solvents
2.11lb/gal	253g/l	Emitted VOC

SECTION 10 — STABILITY AND REACTIVITY

STABILITY — Stable

CONDITIONS TO AVOID

None known.

INCOMPATIBILITY

None known.

HAZARDOUS DECOMPOSITION PRODUCTS

By fire: Carbon Dioxide, Carbon Monoxide

HAZARDOUS POLYMERIZATION

Will not occur

SECTION 11 — TOXICOLOGICAL INFORMATION

CHRONIC HEALTH HAZARDS

Reports have associated repeated and prolonged overexposure to solvents with permanent brain and nervous system damage.

Ethylbenzene is classified by IARC as possibly carcinogenic to humans (2B) based on inadequate evidence in humans and sufficient evidence in laboratory animals. Lifetime inhalation exposure of rats and mice to high ethylbenzene concentrations resulted in increases in certain types of cancer, including kidney tumors in rats and lung and liver tumors in mice. These effects were not observed in animals exposed to lower concentrations. There is no evidence that ethylbenzene causes cancer in humans.

IARC's Monograph No. 93 reports there is sufficient evidence of carcinogenicity in experimental rats exposed to titanium dioxide but inadequate evidence for carcinogenicity in humans and has assigned a Group 2B rating. In addition, the IARC summary concludes, "No significant exposure to titanium dioxide is thought to occur during the use of products in which titanium is bound to other materials, such as paint."

TOXICOLOGY DATA

CAS No.	Ingredient Name			
100-41-4	Ethylbenzene			
		LC50 RAT	4HR	Not Available
		LD50 RAT		3500 mg/kg
1330-20-7	Xylene			
		LC50 RAT	4HR	5000 ppm
		LD50 RAT		4300 mg/kg
68410-23-1	Polyamide			
		LC50 RAT	4HR	Not Available
		LD50 RAT		8000. mg/kg
14807-96-6	Talc			
		LC50 RAT	4HR	Not Available
		LD50 RAT		Not Available
13463-67-7	Titanium Dioxide			
		LC50 RAT	4HR	Not Available
		LD50 RAT		Not Available

SECTION 12 — ECOLOGICAL INFORMATION

ECOTOXICOLOGICAL INFORMATION

No data available.

SECTION 13 — DISPOSAL CONSIDERATIONS

WASTE DISPOSAL METHOD

Waste from this product may be hazardous as defined under the Resource Conservation and Recovery Act (RCRA) 40 CFR 261.
Waste must be tested for Ignitability to determine the applicable EPA hazardous waste numbers.
Incinerate in approved facility. Do not incinerate closed container. Dispose of in accordance with Federal, State/Provincial, and Local regulations regarding pollution.

SECTION 14 — TRANSPORT INFORMATION

US Ground (DOT)

1 Gallon and Less may be Classed as CONSUMER COMMODITY, ORM-D
Larger Containers are Regulated as:
UN1263, PAINT, 3, PG III, (ERG#128)

DOT (Dept of Transportation) Hazardous Substances & Reportable Quantities

Ethyl benzene 1000 lb RQ
Xylenes (Isomers and mixture) 100 lb RQ

Bulk Containers may be Shipped as (check reportable quantities):

RQ, UN1263, PAINT, 3, PG III, (XYLENES (ISOMERS AND MIXTURE)), (ERG#128)

Canada (TDG)

UN1263, PAINT, CLASS 3, PG III, LIMITED QUANTITY, (ERG#128)

IMO

UN1263, PAINT, CLASS 3, PG III, (29 C c.c.), EmS F-E, S-E

SECTION 15 — REGULATORY INFORMATION

SARA 313 *(40 CFR 372.65C)* SUPPLIER NOTIFICATION

CAS No.	CHEMICAL/COMPOUND	% by WT	% Element
100-41-4	Ethylbenzene	3	
1330-20-7	Xylene	15	

CALIFORNIA PROPOSITION 65

WARNING: This product contains chemicals known to the State of California to cause cancer and birth defects or other reproductive harm.

TSCA CERTIFICATION

All chemicals in this product are listed, or are exempt from listing, on the TSCA Inventory.

SECTION 16 — OTHER INFORMATION

This product has been classified in accordance with the hazard criteria of the Canadian Controlled Products Regulations (CPR) and the MSDS contains all of the information required by the CPR.

The above information pertains to this product as currently formulated, and is based on the information available at this time. Addition of reducers or other additives to this product may substantially alter the composition and hazards of the product. Since conditions of use are outside our control, we make no warranties, express or implied, and assume no liability in connection with any use of this information.

Industrial & Marine Coatings

5.35

POLYLON HP POLYURETHANE

PART A B65-525
PART B B65V525

SERIES
HARDENER

PRODUCT INFORMATION

Revised 11/08

PRODUCT DESCRIPTION

POLYLON HP POLYURETHANE is a high performance, high solids two component, exterior/interior, low VOC, polyester-aliphatic urethane coating. Provides a high gloss, excellent chemical resistance, color retention, and chalk resistance.

- Outstanding resistance to a wide range of chemical, weather, and mechanical conditions
- Abrasion and impact resistant
- Superior exterior color and gloss retention.

RECOMMENDED USES

- For industrial, commercial, or marine applications where a heavy duty polyurethane coating is required
- Resists splash, spillage, and fumes of dilute acids, alkalies, solvents, and fuels
- Tank Exteriors
- Pipelines
- Bridges
- Machinery and Equipment
- Marine Vessels
- Product finish type application
- Suitable for use in USDA inspected facilities

PRODUCT CHARACTERISTICS

Finish: Gloss

Color: Wide range of colors available

Volume Solids: 70% ± 2%, mixed, may vary by color

Weight Solids: 80% ± 2%, mixed, may vary by color

VOC (EPA Method 24): Unreduced: <250 g/L; 2.1 lb/gal
mixed Reduced 10%: <340 g/L; 2.8 lb/gal

Mix Ratio: 2:1 by volume

Recommended Spreading Rate per coat:

Wet mils:	3.0 - 4.5
Dry mils:	2.0 - 3.0
Coverage:	380 - 570 sq ft/gal approximate

Drying Schedule @ 4.0 mils wet @ 50% RH:

	@50°F	@ 77°F	@100°F
To touch:	16 hours	2 hours	30 minutes
To handle:	24 hours	5 hours	2 hours
To recoat:			
minimum:	24 hours	12 hours	2 hours
maximum:	3 days48 hours		24 hours
To cure:	7 days7 days 5 days		

If maximum recoat time is exceeded, abrade surface before recoating. Drying time is temperature, humidity, and film thickness dependent.

Pot Life: 5 hours 4 hours 45 minutes

Sweat-in-Time: None required

Shelf Life:
Part A: 36 months, unopened
Part B: 24 months, unopened
Store indoors at 40°F to 100°F

Flash Point: 102°F TCC, mixed

Reducer: Reducer #225, R7K225

PERFORMANCE CHARACTERISTICS

System Tested: (Unless otherwise indicated)
Substrate: Steel
Surface Preparation: SSPC-SP10
1 ct. Macropoxy 646 @6.0 mils dft
1 ct. Polylon HP @ 3.0 mils dft

Abrasion Resistance:
Method: ASTM D4060, CS17 wheel, 1000 cycles, 1 kg load
Result: 63 mg loss (average of 5 trials)

Accelerated Weathering -QUV:
Method: ASTM D4587, QUV-A 3000 hours
Results: Passes, >70% Gloss retention
Meets the requirements of SSPC Paint No.36, Level3.

Adhesion, steel:
Method: ASTM D3359 Method B Method: ASTM D4541
Result: 5B Result: 1200 psi

Direct Impact Resistance:
Method: ASTM D2794
Result: 100 in. lb.

Dry Heat Resistance:
Method: ASTM D2485
Result: 200°F, 250°F intermittent

Exterior Durability:
Method: 2 years at 45° South
Result: Excellent, 87% gloss retention

Flexibility:
Method: ASTM D522, 180° bend, 1/4" mandrel
Result: Passes

Humidity Resistance:
Method: ASTM D4585, 100°F, 2000 hours
Result: No blistering, cracking, softening or delamination

Pencil Hardness:
Method: ASTM D3363
Result: H

Salt Fog Resistance, with primer:
Method: ASTM B117, 1000 hours
Result: Rating 10 per ASTM D610 for rusting, less than 1/16" creepage at scribe. No blistering, cracking, softening, or delamination of the film.

continued on back

SHERWIN WILLIAMS

Industrial & Marine Coatings

PART A B65-525
PART B B65V525

5.35 POLYLON HP POLYURETHANE

SERIES
HARDENER

PRODUCT INFORMATION

RECOMMENDED SYSTEMS

Steel:
1-2 cts. Macropoxy 646 @ 5.0 - 10.0 mils dft/ct
1-2 cts. Poly-Lon HP Polyurethane @ 2.0 - 3.0 mils dft/ct

Steel:
1-2 cts. Recoatable Epoxy Primer @ 4.0 - 6.0 mils dft/ct
1-2 cts. Poly-Lon HP Polyurethane @ 2.0 - 3.0 mils dft/ct

Steel:
1 ct. Zinc Clad II Plus @ 3.0 - 5.0 mils dft
1 ct. Epolon II Epoxy Primer @ 2.0 - 4.0 mils dft
1-2 cts. Poly-Lon HP Polyurethane @ 2.0 - 3.0 mils dft/ct

Steel:
1 ct. Epoxy Mastic Aluminum II @ 6.0 mils dft
1-2 cts. Poly-Lon HP Polyurethane @ 2.0 - 3.0 mils dft/ct

Galvanizing:
1-2 cts. Epolon II Epoxy Primer @ 2.0 - 4.0 mils dft/ct
1-2 cts. Poly-Lon HP Polyurethane @ 2.0 - 3.0 mils dft/ct

Concrete/Masonry:
1 ct. Kem Cati-Coat HS Epoxy Filler/Sealer @ 10.0 - 20.0 mils dft
1-2 cts. Poly-Lon HP Polyurethane @ 2.0 - 3.0 mils dft/ct

The systems listed above are representative of the product's use. Other systems may be appropriate.

SURFACE PREPARATION

Surface must be clean, dry, and in sound condition. Remove all oil, dust, grease, dirt, loose rust, and other foreign material to ensure adequate adhesion.

Refer to product Application Bulletin for detailed surface preparation information.

Minimum recommended surface preparation:

* Iron & Steel:	SSPC-SP6/NACE 3
* Aluminum	SSPC-SP-1
* Galvanizing	SSPC-SP-1
* Primer required	

TINTING

Tint Part A with 844 Colorant at 100% tint strength (white tint base and clear tint base only). Five minutes minimum mixing on a mechanical shaker is required for complete mixing of color

APPLICATION CONDITIONS

Temperature:	40°F minimum, 120°F maximum (air, surface, and material)
	At least 5°F above dew point
Relative humidity:	85% maximum

Refer to product Application Bulletin for detailed application information.

ORDERING INFORMATION

Packaging:

Part A:	1 gal
Part B:	~2 gal in a 3 gal container l/2 gal and 1 gal
Weight per gallon:	10.78 ± 0.2 lb mixed, may vary with color

SAFETY PRECAUTIONS

Refer to the MSDS sheet before use.

Published technical data and instructions are subject to change without notice. Contact your Sherwin-Williams representative for additional technical data and instructions.

DISCLAIMER

The information and recommendations set forth in this Product Data Sheet are based upon tests conducted by or on behalf of The Sherwin-Williams Company. Such information and recommendations set forth herein are subject to change and pertain to the product offered at the time of publication. Consult your Sherwin-Williams representative to obtain the most recent Product Data Information and Application Bulletin.

WARRANTY

The Sherwin-Williams Company warrants our products to be free of manufacturing defects in accord with applicable Sherwin-Williams quality control procedures. Liability for products proven defective, if any, is limited to replacement of the defective product or the refund of the purchase price paid for the defective product as determined by Sherwin-Williams. NO OTHER WARRANTY OR GUARANTEE OF ANY KIND IS MADE BY SHERWIN-WILLIAMS, EXPRESSED OR IMPLIED, STATUTORY, BY OPERATION OF LAW OR OTHERWISE, INCLUDING MERCHANTABILITY AND FITNESS FOR A PARTICULAR PURPOSE.

Industrial & Marine Coatings

5.35A

POLYLON HP POLYURETHANE

PART A B65-525
PART B B65V525

SERIES
HARDENER

APPLICATION BULLETIN

Revised 11/08

SURFACE PREPARATION

Surface must be clean, dry, and in sound condition. Remove all oil, dust, grease, dirt, loose rust, and other foreign material to ensure adequate adhesion.

Iron & Steel
Remove all oil and grease from surface by Solvent Cleaning per SSPC-SP1. Minimum surface preparation is Commercial Blast Cleaning per SSPC-SP6/NACE 3. For better performance, use Near White Metal Blast Cleaning per SSPC-SP10/NACE 2. Blast clean all surfaces using a sharp, angular abrasive for optimum surface profile (1-2 mils). Prime any bare steel the same day as it is cleaned or before flash rusting occurs. Primer Required.

Previously Painted Surfaces:
If in sound condition, clean the surface of all foreign material. Smooth, hard or glossy coatings and surfaces should be dulled by abrading the surface. Apply a test area, allowing paint to dry one week before testing adhesion. If adhesion is poor, or if this products attacks the previous finish, removal of the previous coating may be necessary. If paint is peeling or badly weathered, clean surface to sound substrate and treat as a new surface as above.

Galvanized Steel
Allow to weather a minimum of six months prior to coating. Solvent Clean per SSPC-SP1. When weathering is not possible, or the surface has been treated with chromates or silicates, first Solvent Clean per SSPC-SP1 and apply a test patch. Allow paint to dry at least one week before testing adhesion. If adhesion is poor, brush blasting per SSPC-SP7 is necessary to remove these treatments. Rusty galvanizing requires a minimum of Hand Tool Cleaning per SSPC-SP2, prime the area the same day as cleaned or before flash rusting occurs. Primer required.

Poured Concrete
New
For surface preparation, refer to SSPC-SP13/NACE 6, or ICRI 03732, CSP 1-3. Surfaces must be clean, dry, sound and offer sufficient profile to achieve adequate adhesion. Minimum substrate cure is 28 days at 75°F. Remove all form release agents, curing compounds, salts, efflorescence, laitance, and other foreign matter by sandblasting, shot-blasting, mechanical scarification, or suitable chemical means. Refer to ASTM D4260. Rinse thoroughly to achieve a final pH between 8.0 and 10.0. Allow to dry thoroughly prior to coating.
Old
Surface preparation is done in much the same manner as new concrete, however, if the concrete is contaminated with oils, grease, chemicals, etc., they must be removed by cleaning with a strong detergent. Refer to ASTM D4258. Form release agents, hardeners, etc. must be removed by sandblasting, shotblasting, mechanical scarification, or suitable chemical means. If surface deterioration presents an unacceptably rough surface, Kem Cati-Coat HS Epoxy Filler/Sealer is recommended to patch and resurface damaged concrete.
Fill all cracks, voids and bugholes with ArmorSeal Crack Filler.

Always follow the standard methods listed below:
ASTM D4258 Standard Practice for Cleaning Concrete.
ASTM D4259 Standard Practice for Abrading Concrete.
ASTM D4260 Standard Practice for Etching Concrete.
ASTM F1869 Standard Test Method for Measuring Moisture Vapor Emission Rate of Concrete.
SSPC-SP 13/Nace 6 Surface Preparation of Concrete.
ICRI 03732, Concrete Surface Preparation

APPLICATION CONDITIONS

Temperature:	40°F minimum, 120°F maximum (air, surface, and material) At least 5°F above dew point
Relative humidity:	85% maximum

APPLICATION EQUIPMENT

The following is a guide. Changes in pressures and tip sizes may be needed for proper spray characteristics. Always purge spray equipment before use with listed reducer. Any reduction must be compliant with existing VOC regulations and compatible with the existing environmental and application conditions.

Reducer .....Reducer #225, R7K225

Clean Up .....R6K30, MAK

Airless Spray
Pressure.....2400 - 3000 psi
Hose.....3/8" ID
Tip.....013" - .017"
Filter.....60 mesh
Reduction.....As needed up to 10% by volume

Conventional Spray
Gun.....Binks 95
Cap.....63P
Tip.....66
Atomization Pressure.....50 - 60 psi
Fluid Pressure.....20 - 30 psi
Reduction.....As needed up to 10% by volume

Brush
Brush.....Natural Bristle
Reduction.....As needed up to 10% by volume

Roller
Cover.....1/4" woven with phenolic core
Reduction.....As needed up to 10% by volume

If specific application equipment is not listed above, equivalent equipment may be substituted.

continued on back

Industrial & Marine Coatings

5.35A

POLYLON HP POLYURETHANE

PART A	B65-525	SERIES
PART B	B65V525	HARDENER

APPLICATION BULLETIN

APPLICATION PROCEDURES

Surface preparation must be completed as indicated.
Mix contents of each component thoroughly with power agitation. Make certain no pigment remains on the bottom of the can. Then combine two parts by volume of Part A with one part by volume of Part B. Thoroughly agitate the mixture with power agitation. Allow the material to sweat-in as indicated. Re-stir before using.
If reducer is used, add only after both components have been thoroughly mixed.

Apply paint at the recommended film thickness and spreading rate as indicated below:

Recommended Spreading Rate per coat:

Wet mils:	3.0 - 4.5
Dry mils:	2.0 - 3.0
Coverage:	380 - 570 sq ft/gal approximate

Drying Schedule @ 4.0 mils wet @ 50% RH:

	@50°F	@ 77°F	@100°F
To touch:	16 hours	2 hours	30 minutes
To handle:	24 hours	5 hours	2 hours
To recoat:			
minimum:	24 hours	12 hours	2 hours
maximum:	3 days	48 hours	24 hours
To cure:	7 days	7 days	5 days

If maximum recoat time is exceeded, abrade surface before recoating. Drying time is temperature, humidity, and film thickness dependent.

Pot Life:	5 hours	4 hours	45 minutes

Sweat-in-Time: None required

Application of coating above maximum or below minimum recommended spreading rate may adversely affect coating performance.

PERFORMANCE TIPS

Stripe coat all crevices, welds, and sharp angles to prevent early failure in these areas.

When using spray application, use a 50% overlap with each pass of the gun to avoid holidays, bare areas, and pinholes. If necessary, cross spray at a right angle.

Spreading rates are calculated on volume solids and do not include an application loss factor due to surface profile, roughness or porosity of the surface, skill and technique of the applicator, method of application, various surface irregularities, material lost during mixing, spillage, overthinning, climatic conditions, and excessive film build.

Excessive reduction of material can affect film build, appearance, and adhesion.

Do not apply the material beyond recommended pot life.

Do not mix previously catalyzed material with new.

In order to avoid blockage of spray equipment, clean equipment before use or before periods of extended downtime with Reducer #R6K30.

Mixed coating is sensitive to water. Use water traps in all air lines. Moisture contact can reduce pot life and affect gloss and color.

When rolling this product, always maintain a wet edge to avoid roller marks. Roll as close to any cut-in areas as possible to eliminate visual imperfections. Roller application must be from a roller tray, not by pouring the material onto the surface.

Refer to Product Information sheet for additional performance characteristics and properties.

CLEAN UP INSTRUCTIONS

Clean spills and spatters immediately with Reducer #R6K30. Clean tools immediately after use with Reducer #R6K30. Follow manufacturer's safety recommendations when using any solvent.

SAFETY PRECAUTIONS

Refer to the MSDS sheet before use.

Published technical data and instructions are subject to change without notice. Contact your Sherwin-Williams representative for additional technical data and instructions.

DISCLAIMER

The information and recommendations set forth in this Product Data Sheet are based upon tests conducted by or on behalf of The Sherwin-Williams Company. Such information and recommendations set forth herein are subject to change and pertain to the product offered at the time of publication. Consult your Sherwin-Williams representative to obtain the most recent Product Data Information and Application Bulletin.

WARRANTY

The Sherwin-Williams Company warrants our products to be free of manufacturing defects in accord with applicable Sherwin-Williams quality control procedures. Liability for products proven defective, if any, is limited to replacement of the defective product or the refund of the purchase price paid for the defective product as determined by Sherwin-Williams. NO OTHER WARRANTY OR GUARANTEE OF ANY KIND IS MADE BY SHERWIN-WILLIAMS, EXPRESSED OR IMPLIED, STATUTORY, BY OPERATION OF LAW OR OTHERWISE, INCLUDING MERCHANTABILITY AND FITNESS FOR A PARTICULAR PURPOSE.

MATERIAL SAFETY DATA SHEET

B65W525
04 00

DATE OF PREPARATION
Mar 25, 2009

SECTION 1 — PRODUCT AND COMPANY IDENTIFICATION

PRODUCT NUMBER
B65W525
PRODUCT NAME
POLY-LON® HP Polyester Polyurethane (Part A), Extra White
MANUFACTURER'S NAME
THE SHERWIN-WILLIAMS COMPANY
101 Prospect Avenue N.W.
Cleveland, OH 44115

Telephone Numbers and Websites

Product Information	www.sherwin-williams.com
Regulatory Information	(216) 566-2902 www.paintdocs.com
Medical Emergency	(216) 566-2917
Transportation Emergency*	(800) 424-9300
**for Chemical Emergency ONLY (spill, leak, fire, exposure, or accident)*	

SECTION 2 — COMPOSITION/INFORMATION ON INGREDIENTS

% by Weight	CAS Number	Ingredient	Units	Vapor Pressure
6	110-43-0	**Methyl n-Amyl Ketone**		
		ACGIH TLV	50 PPM	3.855 mm
		OSHA PEL	100 PPM	
10	123-86-4	**n-Butyl Acetate**		
		ACGIH TLV	150 PPM	10 mm
		ACGIH TLV	200 PPM STEL	
		OSHA PEL	150 PPM	
		OSHA PEL	200 PPM STEL	
4	108-65-6	**1-Methoxy-2-Propanol Acetate**		
		ACGIH TLV	Not Available	1.8 mm
		OSHA PEL	Not Available	
1	1332-58-7	**Kaolin**		
		ACGIH TLV	2 mg/m3 as Resp. Dust	
		OSHA PEL	10 mg/m3 Total Dust	
		OSHA PEL	5 mg/m3 Respirable Fraction	
17	13463-67-7	**Titanium Dioxide**		
		ACGIH TLV	10 mg/m3 as Dust	
		OSHA PEL	10 mg/m3 Total Dust	
		OSHA PEL	5 mg/m3 Respirable Fraction	

SECTION 3 — HAZARDS IDENTIFICATION

ROUTES OF EXPOSURE
INHALATION of vapor or spray mist.
EYE or SKIN contact with the product, vapor or spray mist.

HMIS Codes

Health	2*
Flammability	2
Reactivity	0

EFFECTS OF OVEREXPOSURE
EYES: Irritation.
SKIN: Prolonged or repeated exposure may cause irritation.
INHALATION: Irritation of the upper respiratory system.

May cause nervous system depression. Extreme overexposure may result in unconsciousness and possibly death.
Prolonged overexposure to solvent ingredients in Section 2 may cause adverse effects to the liver, urinary and blood forming systems.

SIGNS AND SYMPTOMS OF OVEREXPOSURE
Headache, dizziness, nausea, and loss of coordination are indications of excessive exposure to vapors or spray mists.
Redness and itching or burning sensation may indicate eye or excessive skin exposure.

MEDICAL CONDITIONS AGGRAVATED BY EXPOSURE

May cause allergic respiratory and/or skin reaction in susceptible persons or sensitization. This effect may be delayed several hours after exposure.

Persons sensitive to isocyanates will experience increased allergic reaction on repeated exposure.

CANCER INFORMATION

For complete discussion of toxicology data refer to Section 11.

SECTION 4 — FIRST AID MEASURES

EYES: Flush eyes with large amounts of water for 15 minutes. Get medical attention.

SKIN: Wash affected area thoroughly with soap and water. Remove contaminated clothing and launder before re-use.

INHALATION: If any breathing problems occur during use, **LEAVE THE AREA** and get fresh air. If problems remain or occur later, **IMMEDIATELY** get medical attention.

INGESTION: Do not induce vomiting. Get medical attention immediately.

SECTION 5 — FIRE FIGHTING MEASURES

FLASH POINT	LEL	UEL	FLAMMABILITY CLASSIFICATION
102 °F PMCC	1.1	13.1	Combustible, Flash above 99 and below 200 °F

EXTINGUISHING MEDIA

Carbon Dioxide, Dry Chemical, Foam

UNUSUAL FIRE AND EXPLOSION HAZARDS

Closed containers may explode when exposed to extreme heat.

Application to hot surfaces requires special precautions.

During emergency conditions overexposure to decomposition products may cause a health hazard. Symptoms may not be immediately apparent. Obtain medical attention.

SPECIAL FIRE FIGHTING PROCEDURES

Full protective equipment including self-contained breathing apparatus should be used.

Water spray may be ineffective. If water is used, fog nozzles are preferable. Water may be used to cool closed containers to prevent pressure build-up and possible autoignition or explosion when exposed to extreme heat.

SECTION 6 — ACCIDENTAL RELEASE MEASURES

STEPS TO BE TAKEN IN CASE MATERIAL IS RELEASED OR SPILLED

- Remove all sources of ignition. Ventilate the area.
- Remove with inert absorbent.

SECTION 7 — HANDLING AND STORAGE

STORAGE CATEGORY

DOL Storage Class II

PRECAUTIONS TO BE TAKEN IN HANDLING AND STORAGE

Contents are COMBUSTIBLE. Keep away from heat and open flame.

Consult NFPA Code. Use approved Bonding and Grounding procedures.

Keep container closed when not in use. Transfer only to approved containers with complete and appropriate labeling. Do not take internally. Keep out of the reach of children.

SECTION 8 — EXPOSURE CONTROLS/PERSONAL PROTECTION

PRECAUTIONS TO BE TAKEN IN USE

NO PERSON SHOULD USE THIS PRODUCT, OR BE IN THE AREA WHERE IT IS BEING USED, IF THEY HAVE CHRONIC (LONG-TERM) LUNG OR BREATHING PROBLEMS OR IF THEY EVER HAD A REACTION TO ISOCYANATES.

Use only with adequate ventilation.

Avoid contact with skin and eyes. Avoid breathing vapor and spray mist.

Wash hands after using.

This coating may contain materials classified as nuisance particulates (listed "as Dust" in Section 2) which may be present at hazardous levels only during sanding or abrading of the dried film. If no specific dusts are listed in Section 2, the applicable limits for nuisance dusts are ACGIH TLV 10 mg/m3 (total dust), 3 mg/m3 (respirable fraction), OSHA PEL 15 mg/m3 (total dust), 5 mg/m3 (respirable fraction).

VENTILATION

Local exhaust preferable. General exhaust acceptable if the exposure to materials in Section 2 is maintained below applicable exposure limits. Refer to OSHA Standards 1910.94, 1910.107, 1910.108.

RESPIRATORY PROTECTION

Where overspray is present, a positive pressure air supplied respirator (TC19C NIOSH/MSHA approved) should be worn. If unavailable, a properly fitted organic vapor/particulate respirator approved by NIOSH/MSHA for protection against materials in Section 2 may be effective. Follow respirator manufacturers directions for use. Wear the respirator for the whole time of spraying and until all vapors and mists are gone. **NO PERSONS SHOULD BE ALLOWED IN THE AREA WHERE THIS PRODUCT IS BEING USED UNLESS EQUIPPED WITH THE SAME RESPIRATOR PROTECTION RECOMMENDED FOR THE PAINTERS.**

When sanding or abrading the dried film, wear a dust/mist respirator approved by NIOSH/MSHA for dust which may be generated from this product, underlying paint, or the abrasive.

PROTECTIVE GLOVES

To prevent skin contact, wear gloves which are recommended by glove supplier for protection against materials in Section 2.

EYE PROTECTION

Wear safety spectacles with unperforated sideshields.

OTHER PROTECTIVE EQUIPMENT

Use barrier cream on exposed skin.

OTHER PRECAUTIONS

This product must be mixed with other components before use. Before opening the packages, READ AND FOLLOW WARNING LABELS ON ALL COMPONENTS.

Intentional misuse by deliberately concentrating and inhaling the contents can be harmful or fatal.

SECTION 9 — PHYSICAL AND CHEMICAL PROPERTIES

PRODUCT WEIGHT	11.51 lb/gal	1379 g/l
SPECIFIC GRAVITY	1.39	
BOILING POINT	255 - 308 °F	123 - 153 °C
MELTING POINT	Not Available	
VOLATILE VOLUME	34%	
EVAPORATION RATE	Slower than ether	
VAPOR DENSITY	Heavier than air	
SOLUBILITY IN WATER	N.A.	

VOLATILE ORGANIC COMPOUNDS (VOC Theoretical - As Packaged)

2.49lb/gal	299g/l	Less Water and Federally Exempt Solvents
2.49lb/gal	299g/l	Emitted VOC

SECTION 10 — STABILITY AND REACTIVITY

STABILITY — Stable

CONDITIONS TO AVOID

None known.

INCOMPATIBILITY

None known.

HAZARDOUS DECOMPOSITION PRODUCTS

By fire: Carbon Dioxide, Carbon Monoxide

HAZARDOUS POLYMERIZATION

Will not occur

SECTION 11 — TOXICOLOGICAL INFORMATION

CHRONIC HEALTH HAZARDS

Reports have associated repeated and prolonged overexposure to solvents with permanent brain and nervous system damage.

IARC's Monograph No. 93 reports there is sufficient evidence of carcinogenicity in experimental rats exposed to titanium dioxide but inadequate evidence for carcinogenicity in humans and has assigned a Group 2B rating. In addition, the IARC summary concludes, "No significant exposure to titanium dioxide is thought to occur during the use of products in which titanium is bound to other materials, such as paint."

TOXICOLOGY DATA

CAS No.	Ingredient Name			
110-43-0	**Methyl n-Amyl Ketone**			
		LC50 RAT	4HR	Not Available
		LD50 RAT		1670 mg/kg
123-86-4	**n-Butyl Acetate**			
		LC50 RAT	4HR	2000 ppm
		LD50 RAT		13100 mg/kg
108-65-6	**1-Methoxy-2-Propanol Acetate**			
		LC50 RAT	4HR	Not Available
		LD50 RAT		8500 mg/kg
1332-58-7	**Kaolin**			
		LC50 RAT	4HR	Not Available
		LD50 RAT		Not Available
13463-67-7	**Titanium Dioxide**			
		LC50 RAT	4HR	Not Available
		LD50 RAT		Not Available

SECTION 12 — ECOLOGICAL INFORMATION

ECOTOXICOLOGICAL INFORMATION
No data available.

SECTION 13 — DISPOSAL CONSIDERATIONS

WASTE DISPOSAL METHOD
Waste from this product may be hazardous as defined under the Resource Conservation and Recovery Act (RCRA) 40 CFR 261.
Waste must be tested for ignitability to determine the applicable EPA hazardous waste numbers.
Incinerate in approved facility. Do not incinerate closed container. Dispose of in accordance with Federal, State/Provincial, and Local regulations regarding pollution.

SECTION 14 — TRANSPORT INFORMATION

US Ground (DOT)
May be Classed as a Combustible Liquid for U.S. Ground.
UN1263, PAINT, 3, PG III, (ERG#128)
DOT (Dept of Transportation) Hazardous Substances & Reportable Quantities
Xylenes (Isomers and mixture) 100 lb RQ
Bulk Containers may be Shipped as (check reportable quantities):
UN1263, PAINT, COMBUSTIBLE LIQUID, PG III, (ERG#128)
Canada (TDG)
May be Classed as a Combustible Liquid for Canadian Ground.
UN1263, PAINT, CLASS 3, PG III, (ERG#128)
IMO
UN1263, PAINT, CLASS 3, PG III, (39 C c.c.), EmS F-E, S-E

SECTION 15 — REGULATORY INFORMATION

SARA 313 *(40 CFR 372.65C)* SUPPLIER NOTIFICATION

CAS No.	CHEMICAL/COMPOUND	% by WT	% Element

No ingredients in this product are subject to SARA 313 (40 CFR 372.65C) Supplier Notification.
CALIFORNIA PROPOSITION 65
WARNING: This product contains chemicals known to the State of California to cause cancer and birth defects or other reproductive harm.
TSCA CERTIFICATION
All chemicals in this product are listed, or are exempt from listing, on the TSCA Inventory.

SECTION 16 — OTHER INFORMATION

This product has been classified in accordance with the hazard criteria of the Canadian Controlled Products Regulations (CPR) and the MSDS contains all of the information required by the CPR.

The above information pertains to this product as currently formulated, and is based on the information available at this time. Addition of reducers or other additives to this product may substantially alter the composition and hazards of the product. Since conditions of use are outside our control, we make no warranties, express or implied, and assume no liability in connection with any use of this information.

tobeywade
STRUCTURAL ENGINEERS

May 16, 2012
Project No. R115-12-12

Mr. Aubry Burgess
Plant Manager
PSC FERNLEY FACILITY
2095 Newlands Drive East
Fernley, NV 89408

RE: TANK T-3 CERTIFICATION

Dear Mr. Burgess:

In accordance with the Fernley Facility Amended Tank Replacement plan as prepared by PSC and dated March 25, 2008, each tank is required to be certified by Independent Registered Professional Engineers (IRPE's) prior to being placed into service. This letter has been prepared to document the evaluation of Tank T-3 as performed by Tobey-Wade Consulting.

Background

Tank T-3 is a structural steel tank with a working (design) capacity of 6,125 gallons. The tank has been designed in accordance with International Building Code (IBC) and American Institute of Steel Construction (AISC) requirements. The tank was fabricated by Peabody & Associates.

Infinity Corrosion Group, Inc. has evaluated the tank's suitability and compatibility for its proposed use in PSC's facility and has also certified the tank coating and lining systems. Their certifications have been provided under separate cover to PSC.

Findings

Based on our analysis, the following systems are hereby certified as being in compliance with the Amended Tank Replacement plan:

- Tank T-3 will have sufficient strength to contain the proposed waste materials without rupturing.
- Tank T-3 is situated on a reinforced concrete foundation system which is capable of adequately supporting the tank and its contents under static and dynamic conditions.

NEVADA OFFICE
329 FLINT STREET ■ RENO, NEVADA 89501 ■ TEL: (775) 324.7757 ■ FAX: (775) 324.7797

- Tank T-2 is located in an area with sufficient secondary containment as required by 40 CFR Ch. I, 264.193.
- Tank T-2 is stabile against overturning when subjected to loads based on 2006 International Building Code level seismic events.
- Tank T-2 is anchored to prevent sliding when subjected to loads based on 2006 International Building Code level seismic events. Structural Observation and Special Inspection of the anchorage system has been performed as required by the International Building Code. The Structural Observation and Special Inspection reports are attached.
- Tank T-2 has been tested for leakage and found to be watertight. The Tank Leakage Test results are included in the Tank Inspection Report, copy attached.
- The exterior of Tank T-2's shell wall has been inspected and found to be undamaged. The Tank Shell Inspection results are included in the Tank Inspection Report, copy attached.

Structural Observation, tank leakage and tank shell inspections were performed by Tobey-Wade Consulting, under my direct supervision. Special Inspections were performed by ICC-certified inspectors from Black Eagle Consulting based on anchorage requirements provided by Tobey-Wade Consulting.

Certification Statement

I certify under penalty of law that this report and all attachments were prepared under my direction and supervision in accordance with a system developed to assure that qualified personnel properly gather and evaluate the information submitted. Based on my inquiry of the person or persons who manage the system or those persons directly responsible for gathering the information, the information, submitted is, to the best of my knowledge and belief, true, accurate, and complete. I am aware that there are significant penalties for submitting false information, including the possibility of fines and imprisonment for knowing violations.

This report has been prepared in accordance with acceptable engineering practices and is subject to the assumptions and limitations stated in the report. Also note that this certification covers the aforementioned aspects of Tank T-2 only.

Please feel free to contact me at your convenience should you have any questions relating to our findings.

Sincerely,
TOBEY-WADE CONSULTING

Terrence R. Tobey

TERRENCE R. TOBEY, P.E., S.E.
Principal Structural Engineer

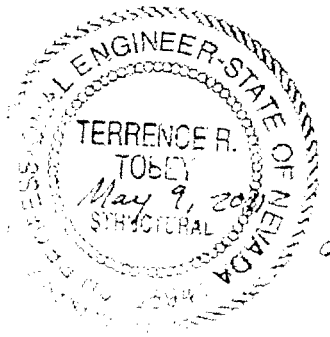

Exp. 6.30.12

TANK DATA SHEET

RCRA-Regulated? YES
Tank Location: DETOX ROOM
Tank Name: TREATMENT TANK
Tank Numbers: T-1, T-2, T-3
Process Description: WASTE NEUTRALIZATION, TREATMENT
Vessel Fluid: AQUEOUS-BASED WASTE LIQUIDS
Specific Gravity: ≤ 1.50
Normal Operating Pressure (psig): ATMOSPHERIC
Freeboard At Working Vol (ft^3): 1' – 0"
Temperature (°F): AMBIENT

	Material	Thickness	Type
Bottom	CARBON STEEL PLATE	5/16" NOMINAL	FLAT
Shell	CARBON STEEL PLATE	5/16" NOMINAL	STRAIGHT
Roof	CARBON STEEL PLATE	¼" NOMINAL	FLAT, BOLTED

Working Volume (USG): 5,125 GALLONS
Nominal Volume (USG): 7,000 GALLONS
Tank I.D. (ft): 6'-6" x 18'-0"
Design Code Used: 2006 IBC
Insulation: NONE
Method of Construction: WELDED STEEL
Tank Height or Length (ft): 8' – 0"
Date in Service: PLANNED Tanks
Anchorage: BOLTED TO CONCRETE. Anchorage designs per 2006 IBC.

Connections

Item No.	Size (In.)	Gasket	Description
1	24"		ROOF MANWAY
2	4"		SIDE FLANGE NOZZLE
3	3"		FILL NOZZLE
4	8"		MIXER NOZZLE
5	4"		VENT FLANGE NOZZLE
6	4"		FLANGE ROOF NOZZLE
7	3"		FLANGE ROOF NOZZLE
8	2"		LEVEL SENSOR CONN.
9	1 ½"		FLANGE NOZZLES (3)
10			
11			
12			
13			
14			
15			

Tank Sketch

Interior Coating: POLYSPEC VINYL ESTER NOVOLAC SYSTEM.
Exterior Coating: BASECOAT EPOXY, TOPCOAT POLYURETHANE ENAMEL.
Tank Mfger: to be determined.

Remarks: Planned tanks for replacement of existing tanks T-1, T-2, and T-3.

TANK INSPECTION FORM

Philip Services Corporation / 21 EMI
PSC Femley Facility
2095 Newlands Drive East
Femley, NV 89408
(775)575-2760

TANK NO.: T-3

79" w x 217" long
by 8' tall w/ 4 ribs
TS6x6

TANK SHELL INSPECTION

34 1/2" between tank shells

Date Inspected: May 14, 2012

Findings: No scrapes, dents; coating looks good

TANK ANCHORAGE STRUCTURAL OBSERVATION

Type of Anchorage System: See details

Date Inspected: May 14, 2012

# of Anchor Plates: 12

AB Type and Diameter: 1/2" ϕ

Plate Contact with Tank: Yes (welded)

Special Inspection Completed?

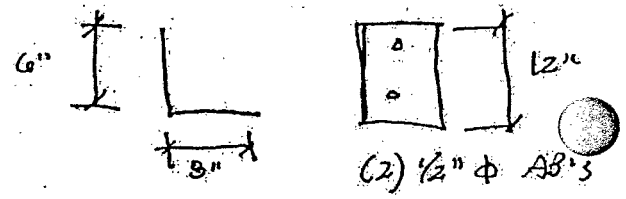

11" edge dist.

TANK LEAKAGE TEST

Date Filled: May 14, 2012

Water Level below Inspection Hatch: 28" ±

Date of Re-inspection: ~~[illegible]~~ May 15, 2012

Water Level below Inspection Hatch: 28 ±

Shell Leakage? No

Leakage on Floor/Drain Pan at Manifold?

INSPECTOR: Lawrence Tobey DATE: 5.14.12

INSPECTOR: Brandon [illegible] DATE: 5-15-12

Frank Evans

DAILY FIELD REPORT

BLACK EAGLE CONSULTING, INC.
GEOTECHNICAL AND CONSTRUCTION SERVICES
1345 Capital Boulevard, Suite A
Reno, NV 89502-7140
Phone: (775) 359-6600
Fax: (775) 359-7766

Project: 3 TANK Replacements	Project Number: 0560-03-1	Date: 3-23 + 3-30-12
Client: Philips Services	Contact: Aubry Burgress	Total Hrs.: 6
Location: Peabody INC	Weather:	Temp.:
Contractor:	Contact:	Stand By Hrs.:

TYPE OF INSPECTION/TESTING		CONCRETE, MORTAR & GROUT TEST DATA					
☐ Site Inspection	☐ Const. Materials Sampling	Set No.					
☐ Construction Observations	☐ Batch Plant Inspection	Mix No.					
☐ Earthwork/Mass Grading	☐ Coring Asphalt/Concrete	Time a.m. p.m.					
☐ Footings/Foundations	☐ Bldg. Pad Certification	Truck No.					
☐ Utilities (Gas, Elect, Wtr)	☐ Reinforcing Steel Insp.	Amb. Temp °F					
☐ Aggregate Base	☒ Structural Welding/Bolting	Mix. Temp °F					
☐ Asphalt Paving	☐ Masonry Inspection	Slump, inches					
☐ Portland Cement Concrete	☐ Fire Proofing Inspection	Air Content, %					
☐ Other	☐ Other	Other					

Equipment in use:

Observations/Comments:

Checked Welder Qualifications, Procedures And Fitup.

AB = Agg Base BS = Bedding Sand B = Below BG = Below Grade FG = Finished Grade FTG = Footing SF = Structural Fill SG = Subgrade SOG = Slab-on Grade

Reviewed By	Technician	Report No.

DAILY FIELD REPORT

BLACK EAGLE CONSULTING, INC.
GEOTECHNICAL AND CONSTRUCTION SERVICES
1345 Capital Boulevard, Suite A
Reno, NV 89502-7140
Phone: (775) 359-6600
Fax: (775) 359-7766

Project: 3 TANK Replacements	Project Number: 0560-03-1	Date: 4-2 - 4/6
Client: Phillips Services	Contact: Aubry Burgess	Total Hrs.: 12½ Hrs
Location: Peabody INC	Weather:	Temp.:
Contractor:	Contact:	Stand By Hrs.:

TYPE OF INSPECTION/TESTING		CONCRETE, MORTAR & GROUT TEST DATA						
☐ Site Inspection	☐ Const. Materials Sampling	Set No.						
☐ Construction Observations	☐ Batch Plant Inspection	Mix No.						
☐ Earthwork/Mass Grading	☐ Coring Asphalt/Concrete	Time a.m. p.m.						
☐ Footings/Foundations	☐ Bldg. Pad Certification	Truck No.						
☐ Utilities (Gas, Elect, Wtr)	☐ Reinforcing Steel Insp.	Amb. Temp °F						
☐ Aggregate Base	☒ Structural Welding/Bolting	Mix. Temp °F						
☐ Asphalt Paving	☐ Masonry Inspection	Slump, inches						
☐ Portland Cement Concrete	☐ Fire Proofing Inspection	Air Content, %						
☐ Other	☐ Other	Other						

Equipment in use:

Observations/Comments:

Went over welding specification and inspected weld Quality. All is acceptable in accordance with AWS D1.1.

AB = Agg. Base BS = Bedding Sand B = Below BG = Below Grade FG = Finished Grade FTG = Footing SF = Structural Fill SG = Subgrade SOG = Slab-on Grade

Reviewed By	Technician	Report No.

DAILY FIELD REPORT

BLACK EAGLE CONSULTING, INC.
GEOTECHNICAL AND CONSTRUCTION SERVICES
1345 Capital Boulevard, Suite A
Reno, NV 89502-7140
Phone: (775) 359-6600
Fax: (775) 359-7766

Project: 3 TANK Replacements	Project Number: 0560-03-1	Date: 4/9 – 4/13/12
Client: Philips Services	Contact: Aubry Burgress	Total Hrs.: 15 1/2
Location: Peabody INC	Weather:	Temp.:
Contractor:	Contact:	Stand By Hrs.:

TYPE OF INSPECTION/TESTING		CONCRETE, MORTAR & GROUT TEST DATA					
☐ Site Inspection	☐ Const. Materials Sampling	Set No.					
☐ Construction Observations	☐ Batch Plant Inspection	Mix No.					
☐ Earthwork/Mass Grading	☐ Coring Asphalt/Concrete	Time a.m. p.m.					
☐ Footings/Foundations	☐ Bldg. Pad Certification	Truck No.					
☐ Utilities (Gas, Elect, Wtr)	☐ Reinforcing Steel Insp.	Amb. Temp °F					
☐ Aggregate Base	☐ Structural Welding/Bolting	Mix. Temp °F					
☐ Asphalt Paving	☐ Masonry Inspection	Slump, inches					
☐ Portland Cement Concrete	☐ Fire Proofing Inspection	Air Content, %					
☐ Other	☐ Other	Other					

Equipment in use:

Observations/Comments:

ALL welding is acceptable – to date. Two tank shells are complete.

AB = Agg Base BS = Bedding Sand B = Below BG = Below Grade FG = Finished Grade FTG = Footing SF = Structural Fill SG = Subgrade SOG = Slab-on Grade

Reviewed By:	Technician	Report No.

N:\Masters\Forms\QC Field Report Template\daily\pfw\dgn\ Inched form.new fmt.doc

DAILY FIELD REPORT

BLACK EAGLE CONSULTING, INC.
GEOTECHNICAL AND CONSTRUCTION SERVICES
1345 Capital Boulevard, Suite A
Reno, NV 89502-7140
Phone: (775) 359-6600
Fax: (775) 359-7766

Project: 3 Tank Replacements	Project Number: 0560-03-1	Date: 4/16 - 4/18
Client: Phillips Services	Contact: Aubry Burgess	Total Hrs.: 8 1/2
Location: Peabody ENC	Weather:	Temp.:
Contractor:	Contact:	Stand By Hrs.:

TYPE OF INSPECTION/TESTING		CONCRETE, MORTAR & GROUT TEST DATA						
☐ Site Inspection	☐ Const. Materials Sampling	Set No.						
☐ Construction Observations	☐ Batch Plant Inspection	Mix No.						
☐ Earthwork/Mass Grading	☐ Coring Asphalt/Concrete	Time a.m. p.m.						
☐ Footings/Foundations	☐ Bldg. Pad Certification	Truck No.						
☐ Utilities (Gas, Elect, Wtr)	☐ Reinforcing Steel Insp.	Amb. Temp °F						
☐ Aggregate Base	☐ Structural Welding/Bolting	Mix. Temp °F						
☐ Asphalt Paving	☐ Masonry Inspection	Slump, inches						
☐ Portland Cement Concrete	☐ Fire Proofing Inspection	Air Content, %						
☐ Other	☐ Other	Other						

Equipment in use:

Observations/Comments:

welding on third tank is complete and welding on the three lids are complete.

AB = Agg Base BS = Bedding Sand B = Below BG = Below Grade FG = Finished Grade FTG = Footing SF = Structural Fill SG = Subgrade SOG = Slab-on Grade

Reviewed By	Technician	Report No.

DAILY FIELD REPORT

Page 1 of 1

BLACK EAGLE CONSULTING, INC.
GEOTECHNICAL AND CONSTRUCTION SERVICES
1345 Capital Boulevard, Suite A
Reno, NV 89502-7140
Phone: (775) 359-6600
Fax: (775) 359-7766

Project: 3 TANK Replacements	Project Number: 0560-03-1	Date: 4/18/12
Client: Philips Services	Contact: Aubry Burgress	Total Hrs.:
Location: Peabody, INC	Weather:	Temp.:
Contractor:	Contact:	Stand By Hrs.:

TYPE OF INSPECTION/TESTING		CONCRETE, MORTAR & GROUT TEST DATA					
☐ Site Inspection	☐ Const. Materials Sampling	Set No.					
☐ Construction Observations	☐ Batch Plant Inspection	Mix No.					
☐ Earthwork/Mass Grading	☐ Coring Asphalt/Concrete	Time a.m. p.m.					
☐ Footings/Foundations	☐ Bldg. Pad Certification	Truck No.					
☐ Utilities (Gas, Elect, Wtr)	☐ Reinforcing Steel Insp.	Amb. Temp °F					
☐ Aggregate Base	☒ Structural Welding/Bolting	Mix. Temp °F					
☐ Asphalt Paving	☐ Masonry Inspection	Slump, inches					
☐ Portland Cement Concrete	☐ Fire Proofing Inspection	Air Content, %					
☐ Other	☐ Other	Other					

Equipment in use:

Observations/Comments: From 3/23 thru 4/18 Peabody Inc Fabricated 3 Replacement tanks For Philips Services. The three tanks were Fabricated to plans and Specifications and all welding is in accordance with AWS D1.

AB = Agg Base BS = Bedding Sand B = Below BG = Below Grade FG = Finished Grade FTG = Footing SF = Structural Fill SG = Subgrade SOG = Slab-on Grade

Reviewed By	Technician	Report No.

N:\Masters\Forms\QC Field Report Templates\daily field rpt locked forms new feet.doc

DAILY FIELD REPORT

BLACK EAGLE CONSULTING, INC.
GEOTECHNICAL AND CONSTRUCTION SERVICES
1345 Capital Boulevard, Suite A
Reno, NV 89502-7140
Phone: (775) 359-6600
Fax: (775) 359-7766

Project: PSC Tank Replacements	Project Number: 0560-03-1	Date: 5-2-12
Client: PSC	Contact: Aubrey	Total Hrs.: 3.0
Location: Fernley	Weather: Clear	Temp:
Contractor: L & H Construction	Contact: Matt	Stand By Hrs.:

TYPE OF INSPECTION/TESTING

☐ Site Inspection	☒ Const. Materials Sampling
☒ Construction Observations	☐ Batch Plant Inspection
☐ Earthwork/Mass Grading	☐ Coring Asphalt/Concrete
☐ Footings/Foundations	☐ Bldg. Pad Certification
☐ Utilities (Gas, Elect, Wtr)	☒ Reinforcing Steel Insp.
☐ Aggregate Base	☐ Structural Welding/Bolting
☐ Asphalt Paving	☐ Masonry Inspection
☒ Portland Cement Concrete	☐ Fire Proofing Inspection
☐ Other	☐ Other

CONCRETE, MORTAR & GROUT TEST DATA

Set No.	1					
Ticket No.	19051					
Time a.m. p.m.	10:41					
Truck No.	21					
Amb. Temp °F	64*F					
Mix. Temp °F	76*F					
Slump, inches	4"					
Air Content, %	N/A					
Other	Fiber Added Mix					

Equipment in use:

Observations/Comments: Performed a visual reinforcing steel inspection prior to concrete placement for TS-3 tank pad. A bonding agent was applied inside the forms and reinforcing steel mat was placed with #4 bars at 18" O.C. E.W. Reinforcing steel was tied at a min of 50% No problems noted. Observed the placement of 3D concrete place approx. 5 yards for TS-3 Tank Pad. Concrete was placed by wheelbarrow. Sampling and testing was performed ref break sheets for additional info. No problems noted.

AB – Agg Base BS – Bedding Sand B – Below BG – Below Grade FG – Finished Grade FTG – Footing SF – Structural Fill SG – Subgrade SOG – Slab-on Grade

Reviewed By _____ 5-8-12

Technician: Adam Hutchings | Report No.

COMPRESSIVE STRENGTH TEST REPORT

REPORT TO:	Philip Services Corporation	PROJECT NAME:	PSC Tank Replacement PO 12103-2
	2095 Newlands Drive	PROJECT NO.:	0560-03-1
	Fernley, NV 89408	DATE SAMPLED:	May 2, 2012
ATTENTION:	Mr. Aubry Burgess	SAMPLED BY:	Adam Hutchings
STRUCTURE:	Tank Pad TS-3		
LOCATION IN STRUCTURE:	Mid Pad		

FIELD DATA

MATERIAL SAMPLED:	Portland Cement Concrete	SET NO:	1
CONTRACTOR:	L & H Concrete	TIME CAST:	10:40 AM
SUPPLIER:	3D Concrete	TRUCK NO:	21
MIX I.D. NO.:	1126 RP	TICKET NO.:	19051
REQ. STRENGTH (28-DAY) psi:	4,500	MIX TEMPERATURE:	76 °F
ADMIXTURES:	1 Gallon Plasticizer	SLUMP:	4 in
CUBIC YARDS PLACED:	5	AIR CONTENT:	N/R %
FIELD NOTES:		AMBIENT TEMPERATURE:	64 °F
REMARKS			

LABORATORY DATA

SAMPLE I.D.	8878	8879	8880	8881	8882
DATE TESTED:	5/9/2012	5/30/2012	5/30/2012	5/30/2012	
AGE, DAYS:	7	28	28	28	Hold
DIMENSION [dia. X ht.] (in):	4 X 8	4 X 8	4 X 8	4 X 8	
AREA, SQUARE (in^2):	12.57	12.57	12.57	12.57	
ULTIMATE LOAD (lbs)	69,410				Not Tested
TYPE OF FRACTURE: *	B				
COMPRESSIVE STRENGTH (psi)	5,520				
DATE RECEIVED:	5/3/12	CAPPING METHOD:	Neoprene Caps	AVERAGE 28-DAY STRENGTH (psi):	#DIV/0!
DISTRIBUTION:					

James Quinn - 3D Concrete (email)

Respectfully Submitted by:
Patrick A. Pilling, Ph.D., P.E., D.GE. - President

DRAFT

BLACK EAGLE CONSULTING, INC.
1345 Capital Boulevard, Suite A
Reno, Nevada 89502

*TYPES OF FRACTURES: A = CONE; B = CONE & SPLIT; C = CONE & SHEAR; D = SHEAR; E = COLUMNAR

TESTING AND SAMPLING WERE PERFORMED IN ACCORDANCE WITH ASTM C39, C78, C143, C172, C173, C231, AND C617 STANDARDS AS APPLICABLE

PSC FERNLEY FACILITY

EPOXY ANCHORS - SPECIAL INSPECTION CHECKLIST

TANK NO./EQUIPMENT NAME: T3

LOCATION: Fernley NV

INSPECTING FIRM & INSPECTOR: Black Eagle Consulting Dan McEwin

DATE: 5-1-12

ANCHORS SUBJECT TO PERIODIC INSPECTION

- Anchor Type — Simpson SET-XP (yes/no) Yes
- Anchor Material and Grade — #4 rebar Grade 60
- Anchor Diameter — 1/2"
- Anchor Length — 9 1/2"
- Hole Location per Details — 15 locations shown 21 dowels installed
- Hole Diameter — 5/8"
- Hole Embedment Depth — 4"
- Hole Cleaning Procedure

	Yes/No
a. Remove dust with oil free compressed air (Min. 4 seconds)	Yes
b. Clean with Nylon Brush (minimum 4 cycles)	Yes
c. Remove dust with oil free compressed air (Min.4 seconds)	Yes

- Anchor Spacing per Details — 21 Dowels installed 7 lines w/ 3 ea. Line Eq spaces
- Edge Distance per Details — Yes
- Anchor Embedment — 4"
- Tightening Torque — N/A
- Adhesive Type — Simpson SET-XP (yes/no) Yes
- Expiration Date — 8-31-12
- Adhesive Installation Method per Simpson requirements (yes/no) Yes

SPECIAL INSPECTOR DAILY REPORT

Page___of___

BLACK EAGLE CONSULTING, INC.
GEOTECHNICAL AND CONSTRUCTION SERVICES
1345 Capital Blvd., Suite A, Reno, Nevada 89502-7140
Phone (775) 359-6600 Fax (775) 359-7766

Project: PSC Tank Replacement Ph1	Project No.: 560-03-1	Date: 5-1-12
Client: PSC	Contact: Aubrey Burgess	Total Hrs.: 2 1/2
Location: Fernley NV	Weather:	Temp.:
Contractor: L&H	Contact: Matt Long	Stand By Hrs.:

Equipment in use:

Describe Inspections Made, Including Locations: Epoxy inspection of (21) #4 x 9 1/2" rebar for tie in from existing SOG to New F3 plan. Simpson Set XP ICC ES ESR 2508 Exp 8-31-12 used as per manufacturer's recommendations. Minimum of 4" embedment obtained.

List Tests Made:

List Items Requiring Correction, Corrections of Previously Listed Items, and Previously Listed Uncorrected Items:

List Changes to Approved Plans Authorized by the Building Official and Architect or Engineer:

Comments: Plans called for (15) #4 contractor placed 21 @ their Disgretion

Signed: [signature] Date: 5-1-12

Print Full Name: Daniel W. McEwing I.D. Number: 0876922881

Reviewed By: [signature] Date: 5-8-12

White to Client Canary to Office File Green to Field File

cc:

QA/QC SIDR # 4

PSC FERNLEY FACILITY

EPOXY ANCHORS - SPECIAL INSPECTION CHECKLIST

TANK NO./EQUIPMENT NAME: TS-3

LOCATION: Fernley, NV

INSPECTING FIRM & INSPECTOR: BLACK EAGLE CONSULTING / ADAM Hutchings

DATE: 5-11-12

ANCHORS SUBJECT TO CONTINUOUS INSPECTION

- Anchor Type — Simpson SET-XP (yes/no) Yes
- Anchor Material and Grade — ASTM A307 All-THREAD
- Anchor Diameter — 1/2"
- Anchor Length — 5"
- Hole Location per Details — Yes
- Hole Drilling Method - Rotary hammer with carbide-tipped drill bits (yes/no) Yes
- Hole Diameter — 5/8
- Hole Embedment Depth — 4"
- Hole Cleaning Procedure

	Yes/No
a. Remove dust with oil free compressed air (Min. 4 seconds)	Yes
b. Clean with Nylon Brush (minimum 4 cycles)	Yes
c. Remove dust with oil free compressed air (Min.4 seconds)	Yes

- Anchor Spacing per Details — Yes
- Edge Distance per Details — Yes
- Anchor Embedment — 4"
- Tightening Torque — Not done @ time of Epoxy
- Adhesive Type — Simpson SET-XP (yes/no) Yes
- Expiration Date — 01/14
- Adhesive Installation Method per Simpson requirements (yes/no) Yes

DAILY FIELD REPORT

BLACK EAGLE CONSULTING, INC.
GEOTECHNICAL AND CONSTRUCTION SERVICES
1345 Capital Boulevard, Suite A
Reno, NV 89502-7140
Phone: (775) 359-6600
Fax: (775) 359-7766

Project: PSC Tank Replacements	Project Number: 0560-03-1	Date: 5-11-12
Client: PSC	Contact: Aubrey	Total Hrs.: 2.5
Location: Fernley	Weather: Clear / Sunny	Temp:
Contractor: Bragg Crane Service	Contact: Vick	Stand By Hrs.:

TYPE OF INSPECTION/TESTING		CONCRETE, MORTAR & GROUT TEST DATA					
☐ Site Inspection	☐ Const. Materials Sampling	Set No.					
☐ Construction Observations	☐ Batch Plant Inspection	Mix No.					
☐ Earthwork/Mass Grading	☐ Coring Asphalt/Concrete	Time a.m. p.m.					
☐ Footings/Foundations	☐ Bldg. Pad Certification	Truck No.					
☐ Utilities (Gas, Elect, Wtr)	☐ Reinforcing Steel Insp.	Amb. Temp °F					
☐ Aggregate Base	☐ Structural Welding/Bolting	Mix. Temp °F					
☐ Asphalt Paving	☐ Masonry Inspection	Slump, inches					
☐ Portland Cement Concrete	☐ Fire Proofing Inspection	Air Content, %					
☒ Other	☒ Other	Other					

Equipment in use:

Observations/Comments: Arrived on-site to observed the continuous inspection of drilling 5/8" holes with a min depth of 4". ½" dia A307 all-thread bolts placed using Simpson Set XP Epoxy ESR# 2508 EXP Date 01/14. (24) total bolts placed, with a min of 4" embedment. Holes were brushed and blown clean using compressed air and a wire brush. No Problems noted during continuous inspection.

AB = Agg Base BS = Bedding Sand B = Below EG = Below Grade FG = Finished Grade FTG = Footing SF = Structural Fill SG = Subgrade SOG = Slab-on Grade

Reviewed By	Technician: Adam Hutchings	Report No.

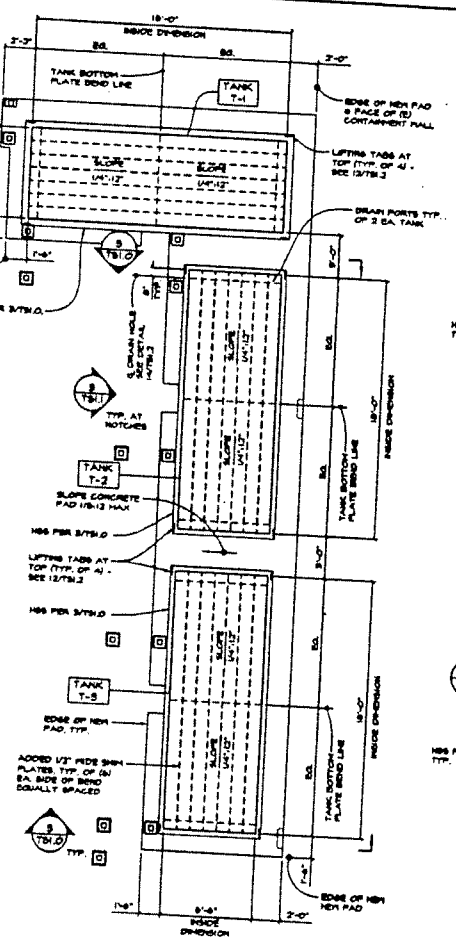

TANK NO. T-1, NO. T-2 AND NO. T-3 PLAN VIEW (PHASE I CONSTRUCTION)
SCALE: 1/4"=1'-0"

NOTES: 1. SEE 1/TS1.1 FOR ANCHORAGE PLAN.
2. SEE TS1.2 FOR TANK LID PLAN & DETAILS.
3. FOR LOCATION OF HSS COLUMNS, SEE S2.0.

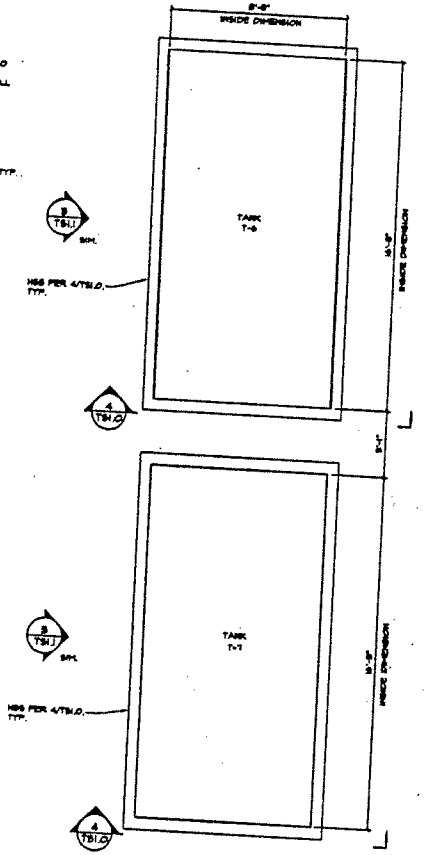

TANK NO. T-6 & T-7 PLAN VIEW
SCALE: 3/8"=1'-0"

NOTES: 1. SEE DETAIL 1/TS1.2 FOR ANCHORAGE PLAN.
2. SEE TS1.2 FOR TANK LID PLAN & DETAILS.

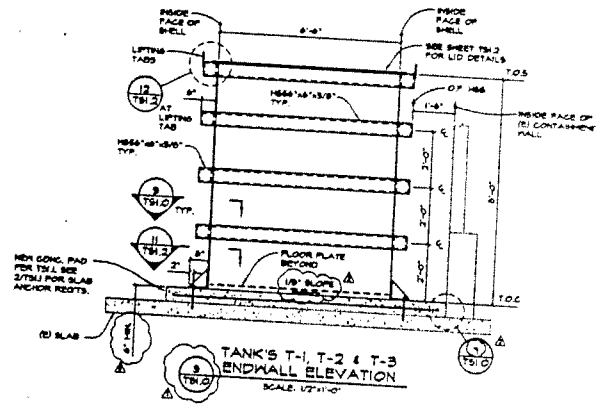

TANK'S T-1, T-2 & T-3 ENDWALL ELEVATION
SCALE: 1/2"=1'-0"

NOTES: 1. TANK SIDEWALLS ARE SIMILAR.

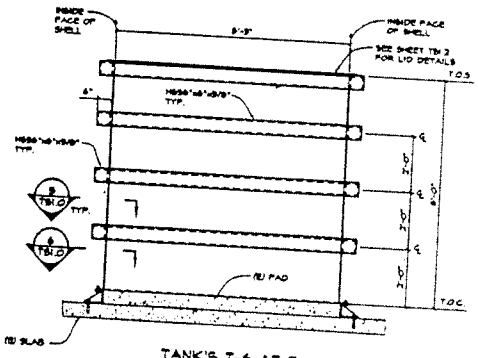

TANK'S T-6 & T-7 ENDWALL ELEVATION
SCALE: 1/2"=1'-0"

NOTES: 1. TANK SIDEWALLS ARE SIMILAR.

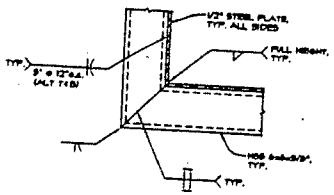

SECTION AT CORNER
SCALE: 1 1/2"=1'-0"

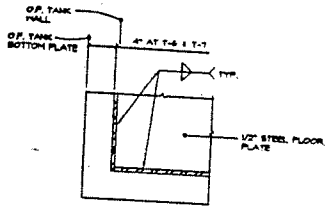

FLOOR PLATE DETAIL
SCALE: 1 1/2"=1'-0"

NOTE: 1. ANCHORAGE ANGLE NOT SHOWN.

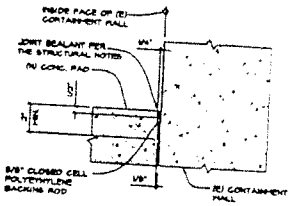

JOINT SEALANT DETAIL
N.T.S

NOTES: 1. REINFORCING NOT SHOWN FOR CLARITY.

ISSUED FOR PERMIT

tobey wade CONSULTING
139 Flint Street
Reno, Nevada 89501
Tel. (775) 324-7757 Fax (775) 324-7797

TANK NO.'S T-1, T-2, T-3, T-6 & T-7 PLANS AND DETAILS
PSC FERNLEY - TANK REPLACEMENT PROJECT
PREPARED FOR
WESTERN PSI
FERNLEY

TS1.0

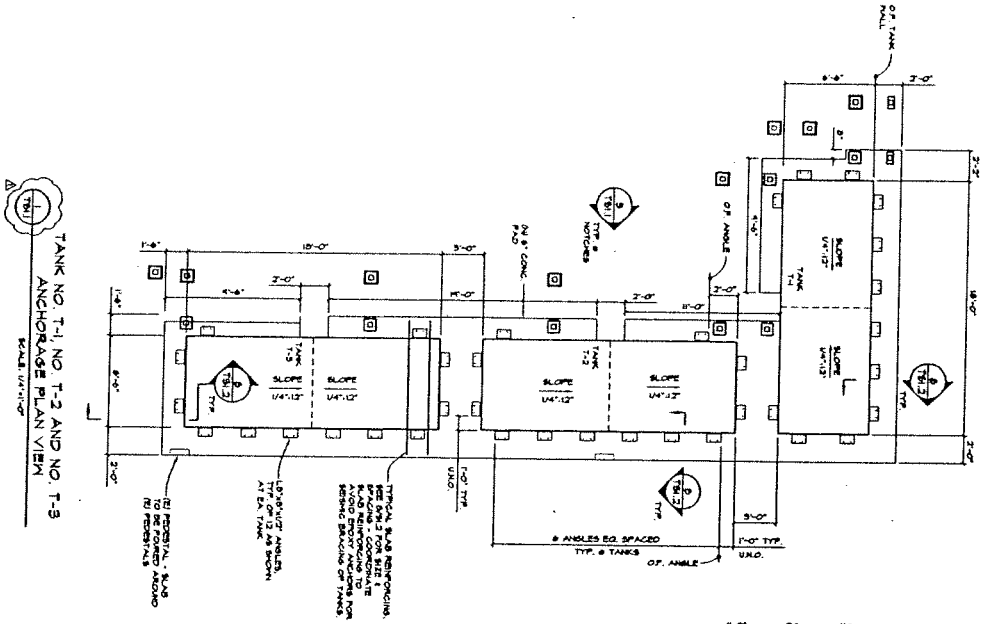

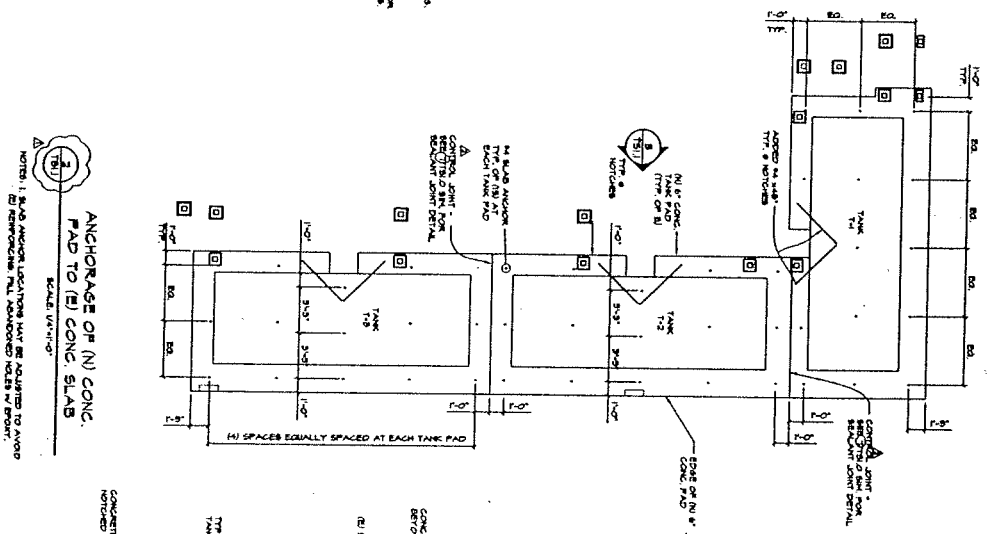

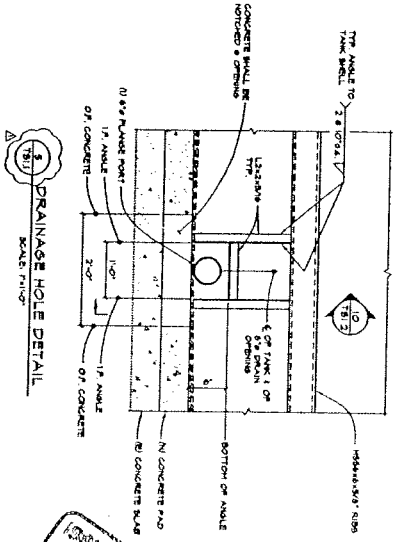

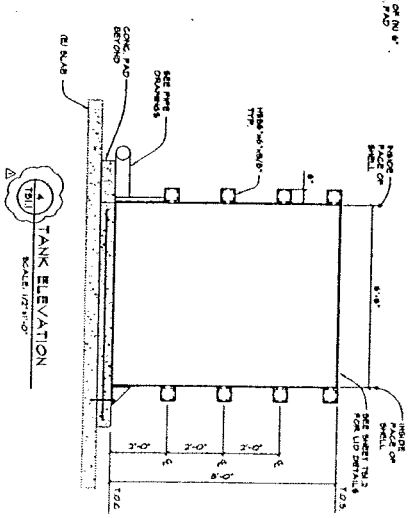

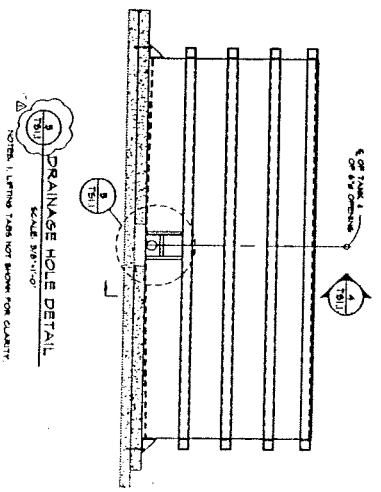

TS1.1

TANK NO.'S T-1 THRU T-3 ANCHORAGE PLAN, T1 THRU T-3, T-6 & T-7 DETAILS

PSC FERNLEY - TANK REPLACEMENT PROJECT

PREPARED FOR

AUSENCO PSI

FERNLEY — LYON COUNTY — NEVADA

tobey wade
CONSULTING
329 Flint Street
Reno, Nevada 89501
Tel. (775) 324-7757 Fax (775) 324-7797

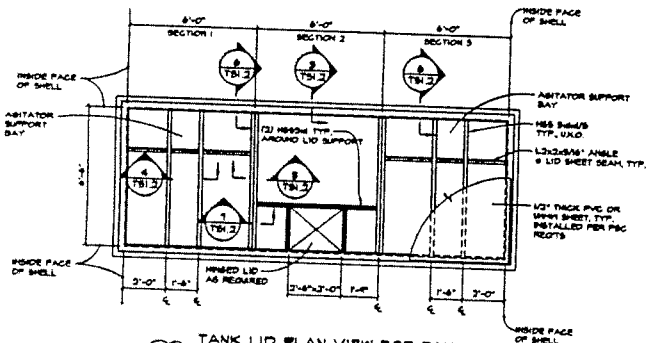

TANK LID PLAN VIEW FOR TANK NO. T-1, NO. T-2 & NO. T-3

SCALE: 3/8"=1'-0"

NOTES: 1. MOTOR WEIGHT SHALL NOT EXCEED 400 LBS.
2. THE LID FRAMING HAS BEEN DESIGNED FOR A LIVE LOAD = 20 psf

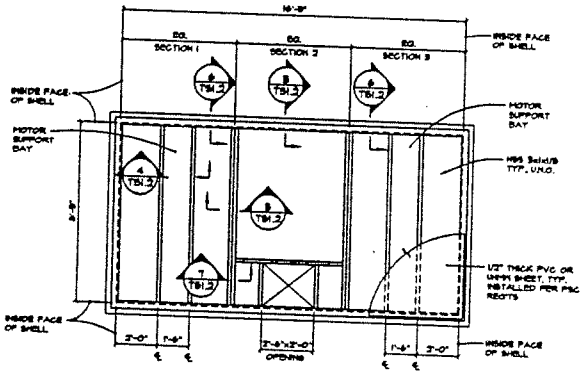

TANK LID PLAN VIEW FOR TANK NO. T-6 & NO. T-7

SCALE: 3/8"=1'-0"

NOTES: 1. MOTOR WEIGHT SHALL NOT EXCEED 400 LBS.
2. THE LID FRAMING HAS BEEN DESIGNED FOR A LIVE LOAD = 20 psf.

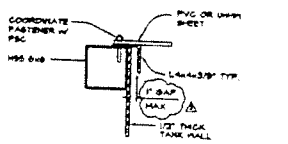

TYPICAL SECTION AT EDGE

SCALE: 1 1/2"=1'-0"

SECTION AT MOTOR SUPPORT

SCALE: 1 1/2"=1'-0"

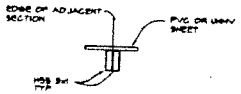

INTERIOR EDGE SUPPORT

SCALE: 1 1/2"=1'-0"

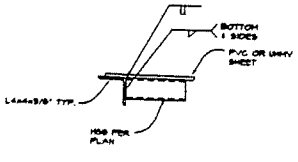

BEAM TO ANGLE CONNECTION

SCALE: 1 1/2"=1'-0"

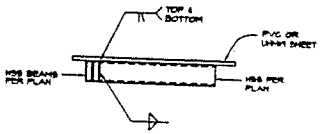

BEAM TO BEAM CONNECTION

SCALE: 1 1/2"=1'-0"

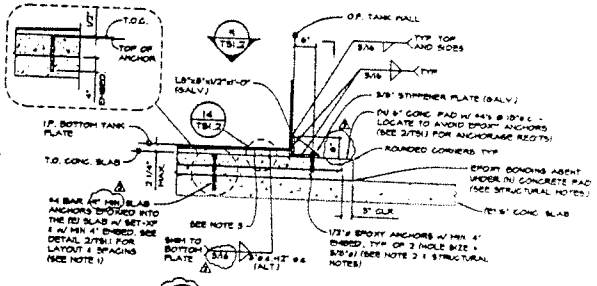

ANCHORAGE DETAIL

SCALE: 3/4"=1'-0"

NOTES: 1. SLAB ANCHORS SHALL HAVE PERIODIC INSPECTION
2. EPOXY ANCHORS SHALL HAVE CONTINUOUS INSPECTION
3. 1/2" PLATE SHIMS @ 1'12" o.c.

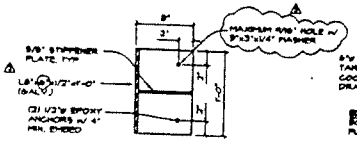

SECTION

SCALE: 1 1/2"=1'-0"

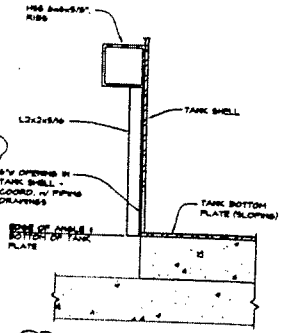

DRAINAGE HOLE DETAIL

SCALE: 1 1/2"=1'-0"

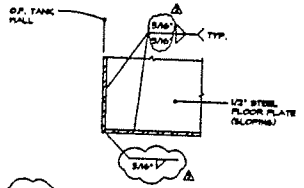

FLOOR PLATE DETAIL

SCALE: 1 1/2"=1'-0"

NOTE: 1. ANCHORAGE ANGLE NOT SHOWN FOR CLARITY.

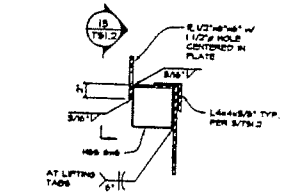

LIFTING TAB DETAIL

SCALE: 1 1/2"=1'-0"

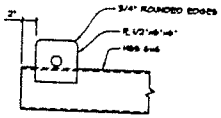

LIFTING TAB DETAIL

SCALE: 1 1/2"=1'-0"

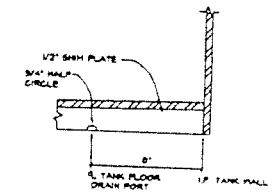

FLOOR PLATE DETAIL

SCALE: 3"=1'-0"

NOTE: 1. ANCHORAGE ANGLE NOT SHOWN FOR CLARITY

ISSUED FOR PERMIT

tobey wade
CONSULTING
329 Flint Street
Reno, Nevada 89501
tel. (775) 324-7757 fax (775) 324-7797

PSC FERNLEY - TANK REPLACEMENT PROJECT

TS1.2

tobeywade
STRUCTURAL ENGINEERS

October 4, 2012
Project No. R115-12-12

Mr. Larry Wilson
Regional General Manager
PSC FERNLEY FACILITY
2095 Newlands Drive East
Fernley, NV 89408

RE: INTERIM TANK T-3 CERTIFICATION

Dear Mr. Wilson:

In accordance with the PSC - Fernley Tank Replacement Project Three Phase Approach plan as prepared by PSC and dated April 18, 2012, each tank is required to be certified by Independent Registered Professional Engineers (IRPE's) prior to being placed into service. This letter has been prepared to document the evaluation of Tank T-3 as performed by Tobey-Wade Consulting.

Please note that the installation of Tank T-3 is being performed under Phase 1 of the three phases of construction. Tank T-3 will be serviced by temporary flexible piping attached to the process piping connection located at the bottom of the tank near its mid-point. The permanent process piping servicing Tank T-3 will be installed in Phase 3 as outlined in the above-referenced April 18, 2012 Three Phase Approach plan. Accordingly, this certification is being provided as an interim certification. Final certification of Tank T-3 will be provided after the permanent piping and all other associated permanent systems have been installed and inspected.

Background

Tank T-3 is a structural steel tank with a working (design) capacity of 6,125 gallons. The tank has been designed in accordance with International Building Code (IBC) and American Institute of Steel Construction (AISC) requirements. The tank was fabricated by Peabody & Associates.

Infinity Corrosion Group, Inc. has evaluated the tank's suitability and compatibility for its proposed use in PSC's facility and has also certified the tank coating and lining systems. Their certifications have been provided under separate cover to PSC.

Findings

Based on our analysis, the following systems are hereby certified as being in compliance with the Amended Tank Replacement plan:

- Tank T-3 will have sufficient strength to contain the proposed waste materials without rupturing.
- Tank T-3 is situated on a reinforced concrete foundation system which is capable of adequately supporting the tank and its contents under static and dynamic conditions.
- Tank T-3 is located in an area with sufficient secondary containment as required by 40 CFR Ch. I, 264.193.
- Tank T-3 is stabile against overturning when subjected to loads based on 2006 International Building Code level seismic events.
- Tank T-3 is anchored to prevent sliding when subjected to loads based on 2006 International Building Code level seismic events. Structural Observation and Special Inspection of the anchorage system has been performed as required by the International Building Code. The Structural Observation and Special Inspection reports are attached.
- Tank T-3 has been tested for leakage and found to be watertight. The Tank Leakage Test results are included in the Tank Inspection Report, copy attached.
- The exterior of Tank T-3's shell wall has been inspected and found to be undamaged. The Tank Shell Inspection results are included in the Tank Inspection Report, copy attached.
- The process piping connection has been inspected and found to be undamaged and with no evidence of leakage. The piping connection has adequate anchorage to prevent displacement during an earthquake. The associated process piping connection inspection form is attached.

Structural Observation, tank leakage and tank shell inspections were performed by Tobey-Wade Consulting, under my direct supervision. Special Inspections were performed by ICC-certified inspectors from Black Eagle Consulting based on anchorage requirements provided by Tobey-Wade Consulting.

Certification Statement

I certify under penalty of law that this report and all attachments were prepared under my direction and supervision in accordance with a system developed to assure that qualified personnel properly gather and evaluate the information submitted. Based on my inquiry of the person or persons who manage the system or those persons directly responsible for gathering the information, the information, submitted is, to the best of my knowledge and belief, true, accurate, and complete. I am aware that there are significant penalties for submitting false information, including the possibility of fines and imprisonment for knowing violations.

This report has been prepared in accordance with acceptable engineering practices and is subject to the assumptions and limitations stated in the report. Also note that this certification covers the aforementioned aspects of Tank T-3 only.

Please feel free to contact me at your convenience should you have any questions relating to our findings.

Sincerely,
TOBEY-WADE CONSULTING

Terrence R. Tobey

TERRENCE R. TOBEY, P.E., S.E.
Principal Structural Engineer

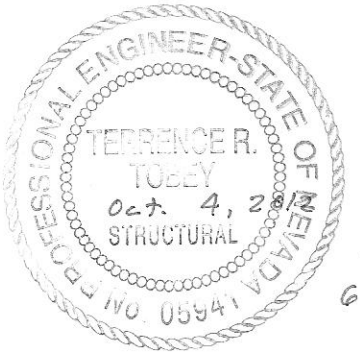

Exp.
6.30.12

TANK DATA SHEET

RCRA-Regulated? YES
Tank Location: DETOX ROOM
Tank Name: TREATMENT TANK
Tank Numbers: T - 1, T - 2, T - 3
Process Description: WASTE NEUTRALIZATION, TREATMENT
Vessel Fluid: AQUEOUS-BASED WASTE LIQUIDS
Specific Gravity: ≤ 1.50 Freeboard At Working Vol (ft^3): 1' – 0"
Normal Operating Pressure (psig): ATMOSPHERIC Temperature (°F): AMBIENT

	Material	Thickness	Type
Bottom	CARBON STEEL PLATE	5/16" NOMINAL	FLAT
Shell	CARBON STEEL PLATE	5/16" NOMINAL	STRAIGHT
Roof	CARBON STEEL PLATE	¼" NOMINAL	FLAT, BOLTED

Working Volume (USG): 6,125 GALLONS Insulation: NONE
Nominal Volume (USG): 7,000 GALLONS Method of Construction: WELDED STEEL
Tank I.D. (ft): 6'-6" x 18'-0" Tank Height or Length (ft): 8' – 0"
Design Code Used: 2006 IBC Date in Service: PLANNED Tanks
Anchorage: BOLTED TO CONCRETE. Anchorage designs per 2006 IBC.

Connections

Item No.	Size (In.)	Gasket	Description
1	24"		ROOF MANWAY
2	4"		SIDE FLANGE NOZZLE
3	3"		FILL NOZZLE
4	8"		MIXER NOZZLE
5	4"		VENT FLANGE NOZZLE
6	4"		FLANGE ROOF NOZZLE
7	3"		FLANGE ROOF NOZZLE
8	2"		LEVEL SENSOR CONN.
9	1 ½"		FLANGE NOZZLES (3)
10			
11			
12			
13			
14			
15			

Tank Sketch

Interior Coating: POLYSPEC VINYL ESTER NOVOLAC SYSTEM.
Exterior Coating: BASECOAT EPOXY, TOPCOAT POLYURETHANE ENAMEL.
Tank Mfger: to be determined.

Remarks: Planned tanks for replacement of existing tanks T-1, T-2, and T-3.

TANK INSPECTION FORM

Philip Services Corporation / 21 EMI
PSC Fernley Facility
2095 Newlands Drive East
Fernley, NV 89408
(775)575-2760

TANK NO.: T-3

79" W x 217" long by 8' tall w/ 4 ribs T56x6

TANK SHELL INSPECTION

Date Inspected: May 14, 2012

Findings: No scrapes, dents; coating looks good

34 1/2" between tank shells

TANK ANCHORAGE STRUCTURAL OBSERVATION

Type of Anchorage System: See details

Date Inspected: May 14, 2012

# of Anchor Plates: 12

AB Type and Diameter: 1/2" ϕ

Plate Contact with Tank: Yes (welded)

Special Inspection Completed?

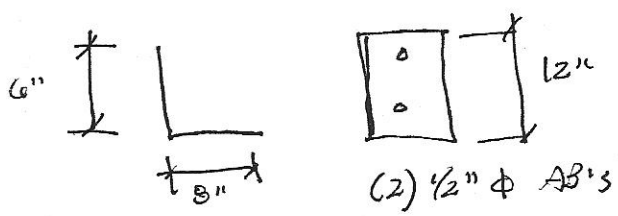

11" edge dist.

TANK LEAKAGE TEST

Date Filled: May 14, 2012 Water Level below Inspection Hatch: 28" ±

Date of Re-inspection: ~~May~~ May 15, 2012 Water Level below Inspection Hatch: 28±

Shell Leakage? No

Leakage on Floor/Drain Pan at Manifold?

INSPECTOR: Terence Tobey **DATE:** 5.14.12

INSPECTOR: Brandon Gill **DATE:** 5-15-12

Frank Evans

TANK INSPECTION FORM

Philip Services Corporation / 21 EMI
PSC Fernley Facility
2095 Newlands Drive East
Fernley, NV 89408
(775)575-2760

TANK NO.: T-3

TANK SHELL INSPECTION Process Piping Connection

Date Inspected: 9/26/12

Findings: No Damage to Process Piping Connection Assembly or to Tank Shell. No Evidence of Leaks.

TANK ANCHORAGE STRUCTURAL OBSERVATION

Type of Anchorage System: N/A

Date Inspected:

# of Anchor Plates:

AB Type and Diameter:

Plate Contact with Tank:

Special Inspection Completed?

TANK LEAKAGE TEST N/A

Date Filled: Water Level below Inspection Hatch:

Date of Re-inspection: Water Level below Inspection Hatch:

Shell Leakage?

Leakage on Floor/Drain Pan at Manifold?

INSPECTOR: Brandt **DATE:** 9/26/12

INSPECTOR: _____ **DATE:** _____

DAILY FIELD REPORT

BLACK EAGLE CONSULTING, INC.
GEOTECHNICAL AND CONSTRUCTION SERVICES
1345 Capital Boulevard, Suite A
Reno, NV 89502-7140
Phone: (775) 359-6600
Fax: (775) 359-7766

Project: 3 TANK REPLACEMENTS	Project Number: 0560-03-1	Date: 3-23 + 3-30-12
Client: PHILIPS SERVICES	Contact: Aubry Burgess	Total Hrs.: 6
Location: Peabody INC	Weather:	Temp.:
Contractor:	Contact:	Stand By Hrs.:

TYPE OF INSPECTION/TESTING		CONCRETE, MORTAR & GROUT TEST DATA						
☐ Site Inspection	☐ Const. Materials Sampling	Set No.						
☐ Construction Observations	☐ Batch Plant Inspection	Mix No.						
☐ Earthwork/Mass Grading	☐ Coring Asphalt/Concrete	Time a.m. p.m.						
☐ Footings/Foundations	☐ Bldg. Pad Certification	Truck No.						
☐ Utilities (Gas, Elect, Wtr)	☐ Reinforcing Steel Insp.	Amb. Temp °F						
☐ Aggregate Base	☒ Structural Welding/Bolting	Mix. Temp °F						
☐ Asphalt Paving	☐ Masonry Inspection	Slump, inches						
☐ Portland Cement Concrete	☐ Fire Proofing Inspection	Air Content, %						
☐ Other	☐ Other	Other						

Equipment in use:

Observations/Comments:

CHECKED WELDER QUALIFICATIONS, PROCEDURES AND FITUP.

AB = Agg Base BS = Bedding Sand B = Below BG = Below Grade FG = Finished Grade FTG = Footing SF = Structural Fill SG = Subgrade SOG = Slab-on Grade

Reviewed By	Technician	Report No.

DAILY FIELD REPORT

BLACK EAGLE CONSULTING, INC.
GEOTECHNICAL AND CONSTRUCTION SERVICES
1345 Capital Boulevard, Suite A
Reno, NV 89502-7140
Phone: (775) 359-6600
Fax: (775) 359-7766

Project: 3 TANK Replacements	Project Number: 0560-03-1	Date: 4-2 - 4/6
Client: PHILIPS Services	Contact: Aubry Burgess	Total Hrs.: 12½ Hrs
Location: Peabody INC	Weather:	Temp.:
Contractor:	Contact:	Stand By Hrs.:

TYPE OF INSPECTION/TESTING		CONCRETE, MORTAR & GROUT TEST DATA						
☐ Site Inspection	☐ Const. Materials Sampling	Set No.						
☐ Construction Observations	☐ Batch Plant Inspection	Mix No.						
☐ Earthwork/Mass Grading	☐ Coring Asphalt/Concrete	Time a.m. p.m.						
☐ Footings/Foundations	☐ Bldg. Pad Certification	Truck No.						
☐ Utilities (Gas, Elect, Wtr)	☐ Reinforcing Steel Insp.	Amb. Temp °F						
☐ Aggregate Base	☒ Structural Welding/Bolting	Mix. Temp °F						
☐ Asphalt Paving	☐ Masonry Inspection	Slump, inches						
☐ Portland Cement Concrete	☐ Fire Proofing Inspection	Air Content, %						
☐ Other	☐ Other	Other						

Equipment in use:

Observations/Comments:

Went over welding specification and inspected weld quality, ALL is acceptable in accordance with AWS D1.1.

AB = Agg Base BS = Bedding Sand B = Below BG = Below Grade FG = Finished Grade FTG = Footing SF = Structural Fill SG = Subgrade SOG = Slab-on Grade

Reviewed By	Technician	Report No.

DAILY FIELD REPORT

BLACK EAGLE CONSULTING, INC.
GEOTECHNICAL AND CONSTRUCTION SERVICES
1345 Capital Boulevard, Suite A
Reno, NV 89502-7140
Phone: (775) 359-6600
Fax: (775) 359-7766

Project: 3 TANK Replacements	Project Number: 0560-03-1	Date: 4/9 – 4/13/12
Client: Philips Services	Contact: Aubry Burgress	Total Hrs.: 15 1/2
Location: Peabody INC	Weather:	Temp.:
Contractor:	Contact:	Stand By Hrs.:

TYPE OF INSPECTION/TESTING		CONCRETE, MORTAR & GROUT TEST DATA					
☐ Site Inspection	☐ Const. Materials Sampling	Set No.					
☐ Construction Observations	☐ Batch Plant Inspection	Mix No.					
☐ Earthwork/Mass Grading	☐ Coring Asphalt/Concrete	Time a.m. p.m.					
☐ Footings/Foundations	☐ Bldg. Pad Certification	Truck No.					
☐ Utilities (Gas, Elect, Wtr)	☐ Reinforcing Steel Insp.	Amb. Temp °F					
☐ Aggregate Base	☐ Structural Welding/Bolting	Mix. Temp °F					
☐ Asphalt Paving	☐ Masonry Inspection	Slump, inches					
☐ Portland Cement Concrete	☐ Fire Proofing Inspection	Air Content, %					
☐ Other	☐ Other	Other					

Equipment in use:

Observations/Comments:

ALL welding is acceptable – to date. Two tank shells are complete.

AB = Agg Base BS = Bedding Sand B = Below BG = Below Grade FG = Finished Grade FTG = Footing SF = Structural Fill SG = Subgrade SOG = Slab-on Grade

Reviewed By	Technician	Report No.

DAILY FIELD REPORT

Page 1 of 1

BLACK EAGLE CONSULTING, INC.
GEOTECHNICAL AND CONSTRUCTION SERVICES
1345 Capital Boulevard, Suite A
Reno, NV 89502-7140
Phone: (775) 359-6600
Fax: (775) 359-7766

Project: 3 TANK Replacements	Project Number: 0560-03-1	Date: 4/16 - 4/18
Client: Phillips Services	Contact: Aubry Burgress	Total Hrs.: 8 1/2
Location: Peabody FNC	Weather:	Temp.:
Contractor:	Contact:	Stand By Hrs.:

TYPE OF INSPECTION/TESTING		CONCRETE, MORTAR & GROUT TEST DATA						
☐ Site Inspection	☐ Const. Materials Sampling	Set No.						
☐ Construction Observations	☐ Batch Plant Inspection	Mix No.						
☐ Earthwork/Mass Grading	☐ Coring Asphalt/Concrete	Time a.m. p.m.						
☐ Footings/Foundations	☐ Bldg. Pad Certification	Truck No.						
☐ Utilities (Gas, Elect, Wtr)	☐ Reinforcing Steel Insp.	Amb. Temp °F						
☐ Aggregate Base	☐ Structural Welding/Bolting	Mix. Temp °F						
☐ Asphalt Paving	☐ Masonry Inspection	Slump, inches						
☐ Portland Cement Concrete	☐ Fire Proofing Inspection	Air Content, %						
☐ Other	☐ Other	Other						

Equipment in use:

Observations/Comments:

welding on third tank is complete and welding on the three lids are complete.

AB = Agg Base BS = Bedding Sand B = Below BG = Below Grade FG = Finished Grade FTG = Footing SF = Structural Fill SG = Subgrade SOG = Slab-on Grade

Reviewed By	Technician	Report No.

DAILY FIELD REPORT

BLACK EAGLE CONSULTING, INC.
GEOTECHNICAL AND CONSTRUCTION SERVICES
1345 Capital Boulevard, Suite A
Reno, NV 89502-7140
Phone: (775) 359-6600
Fax: (775) 359-7766

Project: 3 TANK Replacements	Project Number: 0560-03-1	Date: 4/18/12
Client: PHilips Services	Contact: Aubry Burgess	Total Hrs.:
Location: Peabody, INC	Weather:	Temp.:
Contractor:	Contact:	Stand By Hrs.:

TYPE OF INSPECTION/TESTING		CONCRETE, MORTAR & GROUT TEST DATA						
☐ Site Inspection	☐ Const. Materials Sampling	Set No.						
☐ Construction Observations	☐ Batch Plant Inspection	Mix No.						
☐ Earthwork/Mass Grading	☐ Coring Asphalt/Concrete	Time a.m. p.m.						
☐ Footings/Foundations	☐ Bldg. Pad Certification	Truck No.						
☐ Utilities (Gas, Elect, Wtr)	☐ Reinforcing Steel Insp.	Amb. Temp °F						
☐ Aggregate Base	☒ Structural Welding/Bolting	Mix. Temp °F						
☐ Asphalt Paving	☐ Masonry Inspection	Slump, inches						
☐ Portland Cement Concrete	☐ Fire Proofing Inspection	Air Content, %						
☐ Other	☐ Other	Other						

Equipment in use:

Observations/Comments: From 3/23 thru 4/18 Peabody INC Fabricated 3 Replacement tanks For PHilips Services. The three tanks were Fabricated to plans and Specifications and all welding is in accordance with AWS D1.1.

AB = Agg Base BS = Bedding Sand B = Below BG = Below Grade FG = Finished Grade FTG = Footing SF = Structural Fill SG = Subgrade SOG = Slab-on Grade

Reviewed By	Technician	Report No.

DAILY FIELD REPORT

BLACK EAGLE CONSULTING, INC.
GEOTECHNICAL AND CONSTRUCTION SERVICES
1345 Capital Boulevard, Suite A
Reno, NV 89502-7140
Phone: (775) 359-6600
Fax: (775) 359-7766

Project: PSC Tank Replacements	Project Number: 0560-03-1	Date: 5-2-12
Client: PSC	Contact: Aubrey	Total Hrs.: 3.0
Location: Fernley	Weather: Clear	Temp:
Contractor: L & H Construction	Contact: Matt	Stand By Hrs.:

TYPE OF INSPECTION/TESTING **CONCRETE, MORTAR & GROUT TEST DATA**

☐ Site Inspection	☒ Const. Materials Sampling	Set No.	1				
☒ Construction Observations	☐ Batch Plant Inspection	Ticket No.	19051				
☐ Earthwork/Mass Grading	☐ Coring Asphalt/Concrete	Time a.m. p.m.	10:41				
☐ Footings/Foundations	☐ Bldg. Pad Certification	Truck No.	21				
☐ Utilities (Gas, Elect, Wtr)	☒ Reinforcing Steel Insp.	Amb. Temp °F	64*F				
☐ Aggregate Base	☐ Structural Welding/Bolting	Mix. Temp °F	76*F				
☐ Asphalt Paving	☐ Masonry Inspection	Slump, inches	4"				
☒ Portland Cement Concrete	☐ Fire Proofing Inspection	Air Content, %	N/A				
☐ Other	☐ Other	Other	Fiber Added Mix				

Equipment in use:

Observations/Comments: Performed a visual reinforcing steel inspection prior to concrete placement for TS-3 tank pad. A bonding agent was applied inside the forms and reinforcing steel mat was placed with #4 bars at 18" O.C. E.W. Reinforcing steel was tied at a min of 50% No problems noted. Observed the placement of 3D concrete place approx. 5 yards for TS-3 Tank Pad. Concrete was placed by wheelbarrow. Sampling and testing was performed ref break sheets for additional info. No problems noted.

AB – Agg Base BS – Bedding Sand B – Below BG – Below Grade FG – Finished Grade FTG – Footing SF – Structural Fill SG – Subgrade SOG – Slab-on Grade		
Reviewed By [signature] 5-8-12	Technician: Adam Hutchings	Report No.

COMPRESSIVE STRENGTH TEST REPORT

REPORT TO:	Philip Services Corporation	PROJECT NAME:	PSC Tank Replacement PO 12103-2
	2095 Newlands Drive	PROJECT NO.:	0560-03-1
	Fernley, NV 89408	DATE SAMPLED:	May 2, 2012
ATTENTION:	Mr. Aubry Burgess	SAMPLED BY:	Adam Hutchings
STRUCTURE:	Tank Pad TS-3		
LOCATION IN STRUCTURE:	Mid Pad		

FIELD DATA

MATERIAL SAMPLED:	Portland Cement Concrete	SET NO:	1
CONTRACTOR:	L & H Concrete	TIME CAST:	10:40 AM
SUPPLIER:	3D Concrete	TRUCK NO:	21
MIX I.D. NO.:	1126 RP	TICKET NO.:	19051
REQ. STRENGTH (28-DAY) psi:	4,500	MIX TEMPERATURE:	76 °F
ADMIXTURES:	1 Gallon Plasticizer	SLUMP:	4 in
CUBIC YARDS PLACED:	5	AIR CONTENT:	N/R %
FIELD NOTES:		AMBIENT TEMPERATURE:	64 °F
REMARKS			

LABORATORY DATA

SAMPLE I.D.	8878	8879	8880	8881	8882
DATE TESTED:	5/9/2012	5/30/2012	5/30/2012	5/30/2012	
AGE, DAYS:	7	28	28	28	Hold
DIMENSION [dia. X ht.] (in):	4 X 8	4 X 8	4 X 8	4 X 8	
AREA, SQUARE (in^2):	12.57	12.57	12.57	12.57	
ULTIMATE LOAD (lbs)	69,410				Not Tested
TYPE OF FRACTURE: *	B				
COMPRESSIVE STRENGTH (psi)	5,520				

DATE RECEIVED:	5/3/12	CAPPING METHOD:	Neoprene Caps	AVERAGE 28-DAY STRENGTH (psi):	#DIV/0!

DISTRIBUTION:

James Quinn - 3D Concrete (email)

Respectfully Submitted by:
Patrick A. Pilling, Ph.D., P.E., D.GE. - President

DRAFT

BLACK EAGLE CONSULTING, INC.
1345 Capital Boulevard, Suite A
Reno, Nevada 89502

*TYPES OF FRACTURES: A = CONE; B = CONE & SPLIT; C = CONE & SHEAR; D = SHEAR; E = COLUMNAR

TESTING AND SAMPLING WERE PERFORMED IN ACCORDANCE WITH ASTM C39, C78, C143, C172, C173, C231, AND C617 STANDARDS AS APPLICABLE

PSC FERNLEY FACILITY

EPOXY ANCHORS - SPECIAL INSPECTION CHECKLIST

TANK NO./EQUIPMENT NAME: T3

LOCATION: Fernley NV

INSPECTING FIRM & INSPECTOR: Black Eagle Consulting Dan McEwin

DATE: 5-1-12

ANCHORS SUBJECT TO PERIODIC INSPECTION

- Anchor Type — Simpson SET-XP (yes/no) Yes
- Anchor Material and Grade — #4 rebar Grade 60
- Anchor Diameter — 1/2"
- Anchor Length — 9 1/2"
- Hole Location per Details — 15 locations shown 21 total Dowels installed
- Hole Diameter — 5/8"
- Hole Embedment Depth — 4"
- Hole Cleaning Procedure

	Yes/No
a. Remove dust with oil free compressed air (Min. 4 seconds)	Yes
b. Clean with Nylon Brush (minimum 4 cycles)	Yes
c. Remove dust with oil free compressed air (Min.4 seconds)	Yes

- Anchor Spacing per Details — 21 Dowels installed 7 lines w/ 3 ea. Line Eq spaces
- Edge Distance per Details — Yes
- Anchor Embedment — 4"
- Tightening Torque — N/A
- Adhesive Type — Simpson SET-XP (yes/no) Yes
- Expiration Date — 6-31-12
- Adhesive Installation Method per Simpson requirements (yes/no) Yes

SPECIAL INSPECTOR DAILY REPORT

Page___of___

BLACK EAGLE CONSULTING, INC.
GEOTECHNICAL AND CONSTRUCTION SERVICES
1345 Capital Blvd., Suite A, Reno, Nevada 89502-7140
Phone (775) 359-6600 Fax (775) 359-7766

Project: PSC Tank Replacement Ph1	Project No.: 560-03-1	Date: 5-1-12
Client: PSC	Contact: Aubrey Burgess	Total Hrs.: 2 1/2
Location: Fernley NV	Weather:	Temp.:
Contractor: L&H	Contact: Matt Long	Stand By Hrs.:

Equipment in use:

Describe Inspections Made, Including Locations: Epoxy inspection of (21) #4 x 9 1/2" rebar for tie in from existing SOG to New T3 plan. Simpson Set XP ICC ES ESR 2508 exp 8-31-12 used as per manufacturer's recommendations. Minimum of 4" embedment obtained.

List Tests Made:

List Items Requiring Correction, Corrections of Previously Listed Items, and Previously Listed Uncorrected Items:

List Changes to Approved Plans Authorized by the Building Official and Architect or Engineer:

Comments: Plans called for (15) #4 contractor placed 21 @ their disgretion

Signed: [signature] Date: 5-1-12

Print Full Name: Daniel W. McEwing I.D. Number: 0876922881

Reviewed By: [signature] Date 5-8-12

White to *Client* Canary to *Office File* Green to *Field File*

cc:

QA/QC SIDR # 4

PSC FERNLEY FACILITY

EPOXY ANCHORS - SPECIAL INSPECTION CHECKLIST

TANK NO./EQUIPMENT NAME: TS-3

LOCATION: Fernley, NV

INSPECTING FIRM & INSPECTOR: BLACK EAGLE CONSULTING / ADAM Hutchings

DATE: 5-11-12

ANCHORS SUBJECT TO <u>CONTINUOUS</u> INSPECTION

- Anchor Type — Simpson SET-XP (yes/no) Yes
- Anchor Material and Grade — ASTM A307 All-THREAD
- Anchor Diameter — 1/2"
- Anchor Length — 5"
- Hole Location per Details — Yes
- Hole Drilling Method - Rotary hammer with carbide-tipped drill bits (yes/no) Yes
- Hole Diameter — 5/8
- Hole Embedment Depth — 4"
- Hole Cleaning Procedure

	Yes/No
a. Remove dust with oil free compressed air (Min. 4 seconds)	Yes
b. Clean with Nylon Brush (minimum 4 cycles)	Yes
c. Remove dust with oil free compressed air (Min.4 seconds)	Yes

- Anchor Spacing per Details — Yes
- Edge Distance per Details — Yes
- Anchor Embedment — 4"
- Tightening Torque — Not done @ time of Epoxy
- Adhesive Type — Simpson SET-XP (yes/no) Yes
- Expiration Date — 01/14
- Adhesive Installation Method per Simpson requirements (yes/no) Yes

DAILY FIELD REPORT

BLACK EAGLE CONSULTING, INC.
GEOTECHNICAL AND CONSTRUCTION SERVICES
1345 Capital Boulevard, Suite A
Reno, NV 89502-7140
Phone: (775) 359-6600
Fax: (775) 359-7766

Project: PSC Tank Replacements	**Project Number: 0560-03-1**	**Date: 5-11-12**
Client: PSC	**Contact: Aubrey**	**Total Hrs.: 2.5**
Location: Fernley	**Weather: Clear / Sunny**	**Temp:**
Contractor: Bragg Crane Service	**Contact: Vick**	**Stand By Hrs.:**

TYPE OF INSPECTION/TESTING

			CONCRETE, MORTAR & GROUT TEST DATA				
☐ Site Inspection	☐ Const. Materials Sampling	Set No.					
☐ Construction Observations	☐ Batch Plant Inspection	Mix No.					
☐ Earthwork/Mass Grading	☐ Coring Asphalt/Concrete	Time a.m. p.m.					
☐ Footings/Foundations	☐ Bldg. Pad Certification	Truck No.					
☐ Utilities (Gas, Elect, Wtr)	☐ Reinforcing Steel Insp.	Amb. Temp °F					
☐ Aggregate Base	☐ Structural Welding/Bolting	Mix. Temp °F					
☐ Asphalt Paving	☐ Masonry Inspection	Slump, inches					
☐ Portland Cement Concrete	☐ Fire Proofing Inspection	Air Content, %					
☒ Other	☒ Other	Other					

Equipment in use:

Observations/Comments: Arrived on-site to observed the continuous inspection of drilling 5/8" holes with a min depth of 4". ½" dia A307 all-thread bolts placed using Simpson Set XP Epoxy ESR# 2508 EXP Date 01/14. (24) total bolts placed, with a min of 4" embedment. Holes were brushed and blown clean using compressed air and a wire brush. No Problems noted during continuous inspection.

MAC HD:Users:huchingsadam:Desktop:week ending 5-12-12:FDC 5-11-12.doc

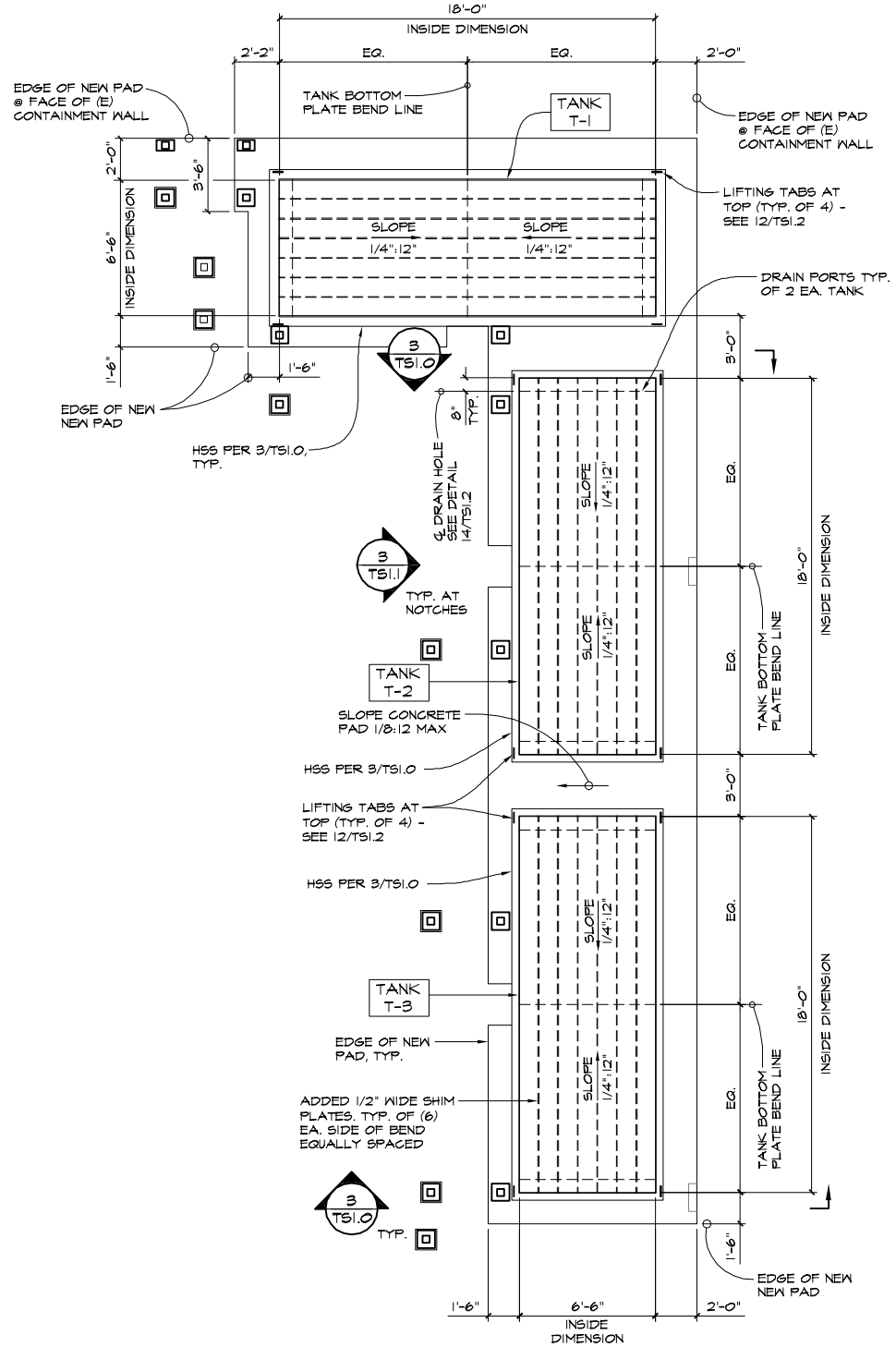

TANK NO. T-1, NO. T-2 AND NO. T-3 PLAN VIEW (PHASE I CONSTRUCTION)

1 TS1.0 — SCALE: 1/4"=1'-0"

NOTES: 1. SEE 1/TS1.1 FOR ANCHORAGE PLAN.
2. SEE TS1.2 FOR TANK LID PLAN & DETAILS.
3. FOR LOCATION OF HSS COLUMNS, SEE S2.0.

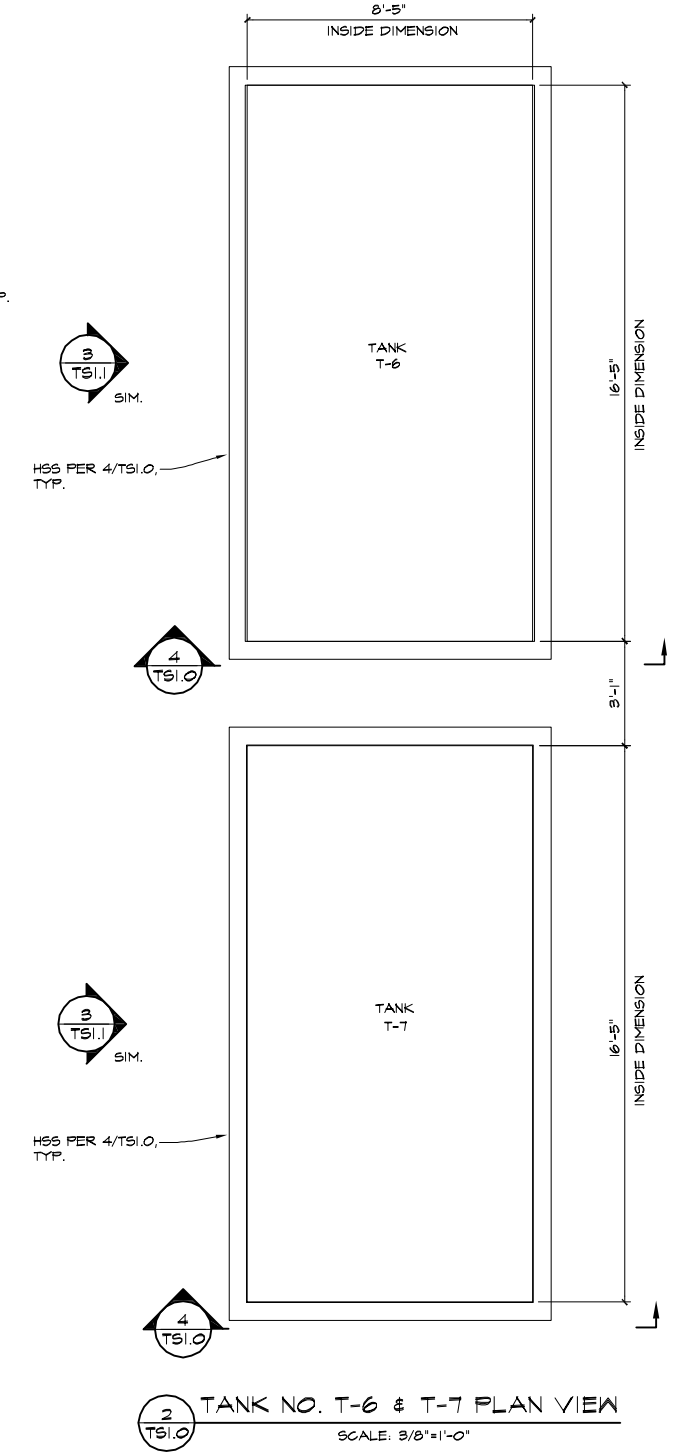

TANK NO. T-6 & T-7 PLAN VIEW

2 TS1.0 — SCALE: 3/8"=1'-0"

NOTES: 1. SEE DETAIL 1/TS1.3 FOR ANCHORAGE PLAN.
2. SEE TS1.2 FOR TANK LID PLAN & DETAILS.

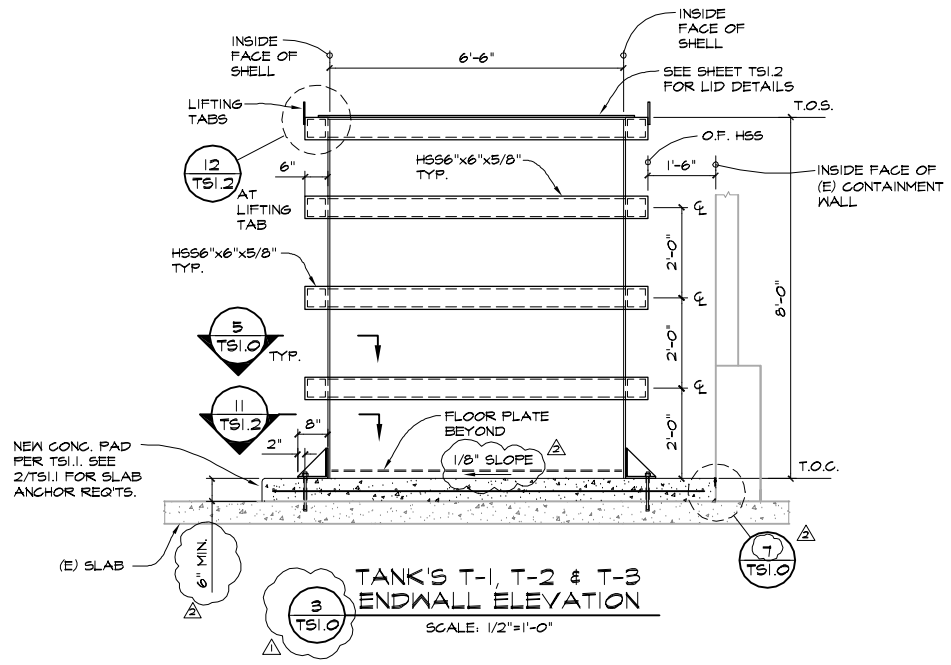

TANK'S T-1, T-2 & T-3 ENDWALL ELEVATION

3 TS1.0 — SCALE: 1/2"=1'-0"

NOTES: 1. TANK SIDEWALLS ARE SIMILAR.

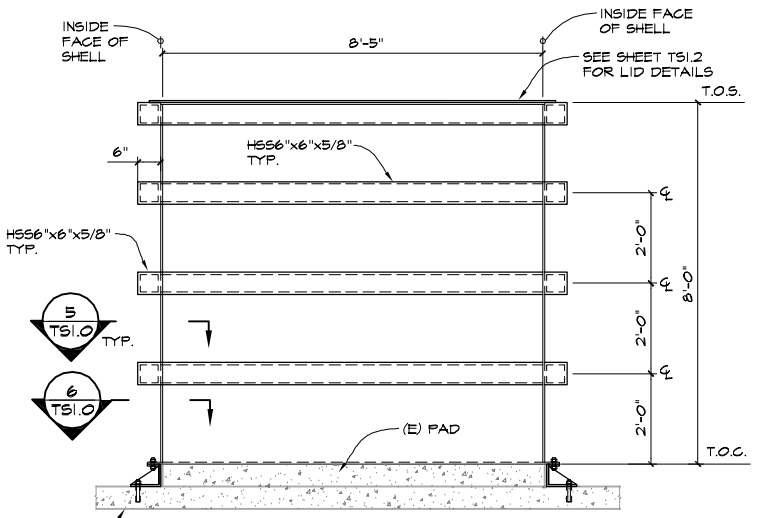

TANK'S T-6 & T-7 ENDWALL ELEVATION

4 TS1.0 — SCALE: 1/2"=1'-0"

NOTES: 1. TANK SIDEWALLS ARE SIMILAR.

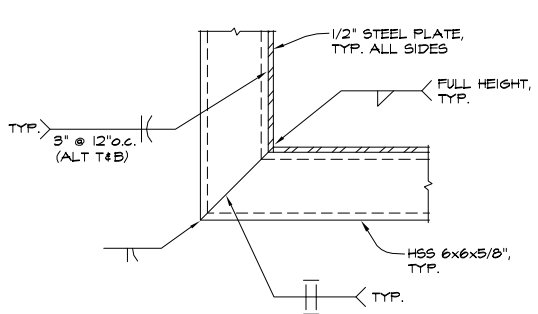

SECTION AT CORNER

5 TS1.0 — SCALE: 1 1/2"=1'-0"

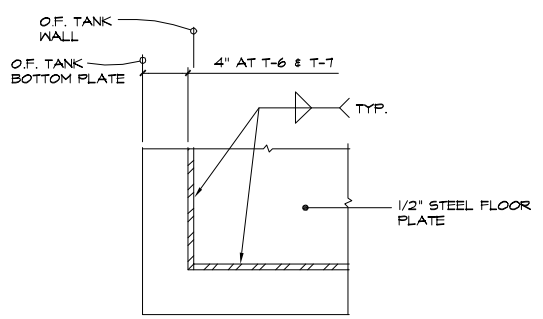

FLOOR PLATE DETAIL

6 TS1.0 — SCALE: 1 1/2"=1'-0"

NOTE: 1. ANCHORAGE ANGLE NOT SHOWN.

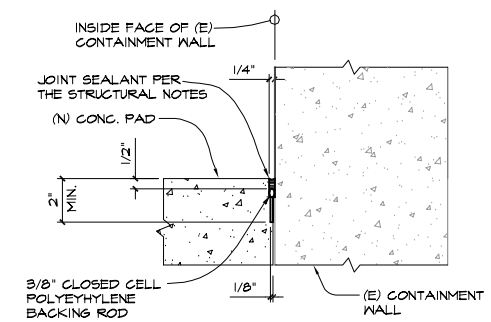

JOINT SEALANT DETAIL

7 TS1.0 — N.T.S.

NOTES: 1. REINFORCING NOT SHOWN FOR CLARITY.

ISSUED FOR PERMIT

© TOBEY WADE CONSULTING
THIS DRAWING IS THE PROPERTY OF TOBEY WADE CONSULTING, USE & DISCLOSURE SUBJECT TO THE TERMS OF THE AGREEMENT. IT MAY NOT BE REPRODUCED IN ANY FORM WITHOUT THE WRITTEN CONSENT OF TOBEY WADE CONSULTING. IT IS NOT TO BE USED FOR ANY PURPOSE OTHER THAN THAT FOR WHICH IT IS SUPPLIED. THE DRAWING IS NOT TO BE USED FOR ANY PROJECT OTHER THAN THE PROJECT FOR WHICH IT HAS BEEN PREPARED.

tobey wade
CONSULTING
329 Flint Street
Reno, Nevada 89501
Tel. (775) 324-7757 Fax (775) 324-7797

TANK NO.'s T-1 THRU T-3, T-6 & T-7 PLANS AND DETAILS

PSC FERNLEY - TANK REPLACEMENT PROJECT

PREPARED FOR
AUSENCO PSI

LYON COUNTY — NEVADA

FERNLEY

REVISIONS		
NO.	DESCRIPTION/DATE	BY
1	REVISED TANK T-1 & T-3 FLOOR PLATE & ANCHORAGE 3/2/12	TRT
2	CONSTRUCTION CHANGES 5/7/12	JMC

EXPIRES: JUNE 30, 2012
TERRENCE R. TOBEY, S.E.

JOB NO.	R371-01-11
DESIGNED	T.R.T.
DRAWN	B.C.E.
CONF.	
CHECKED	
DATE	OCT. 12, 2011

TS1.0

OF SHEETS

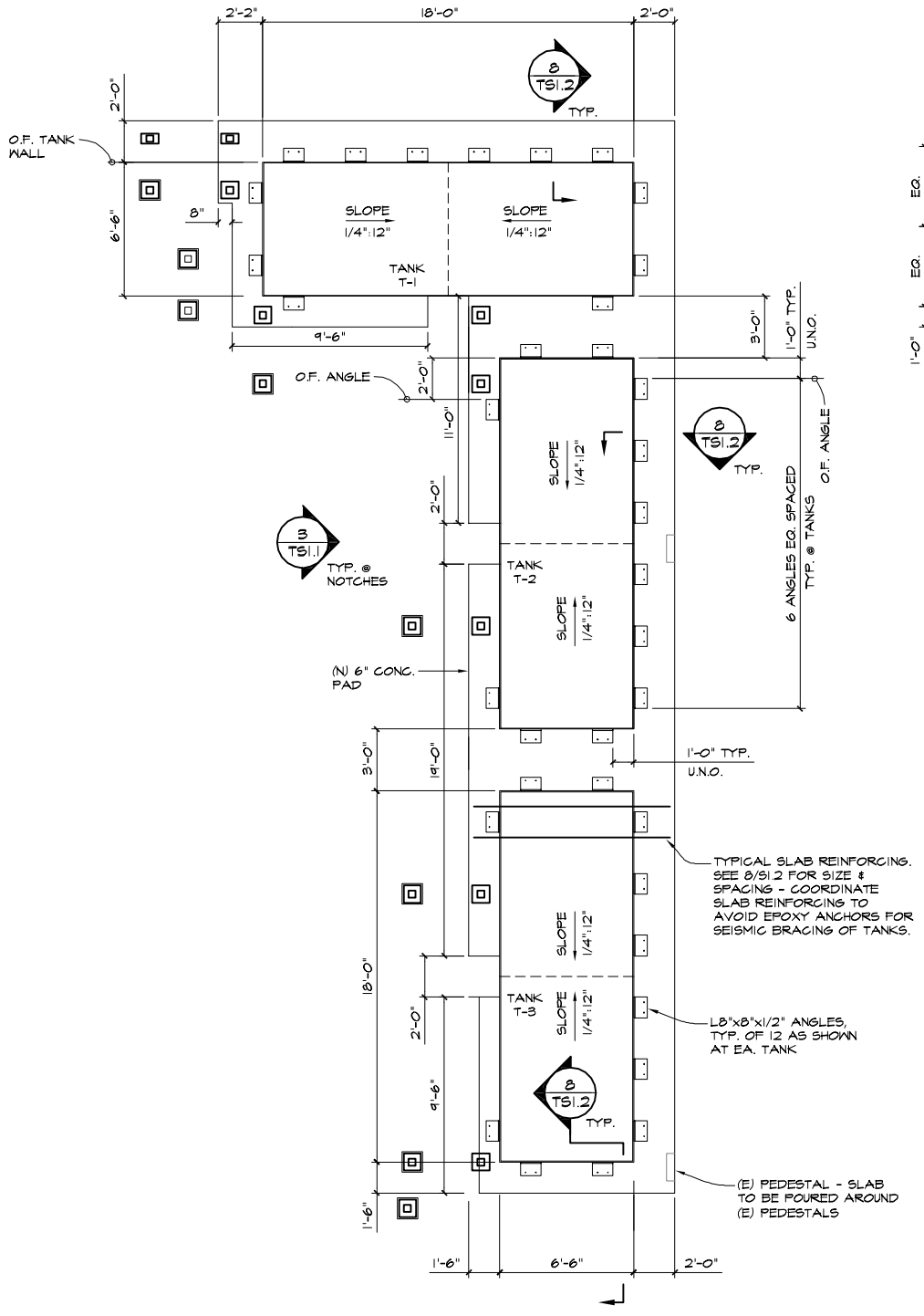

TANK NO. T-1, NO. T-2 AND NO. T-3 ANCHORAGE PLAN VIEW

1 TS1.1

SCALE: 1/4"=1'-0"

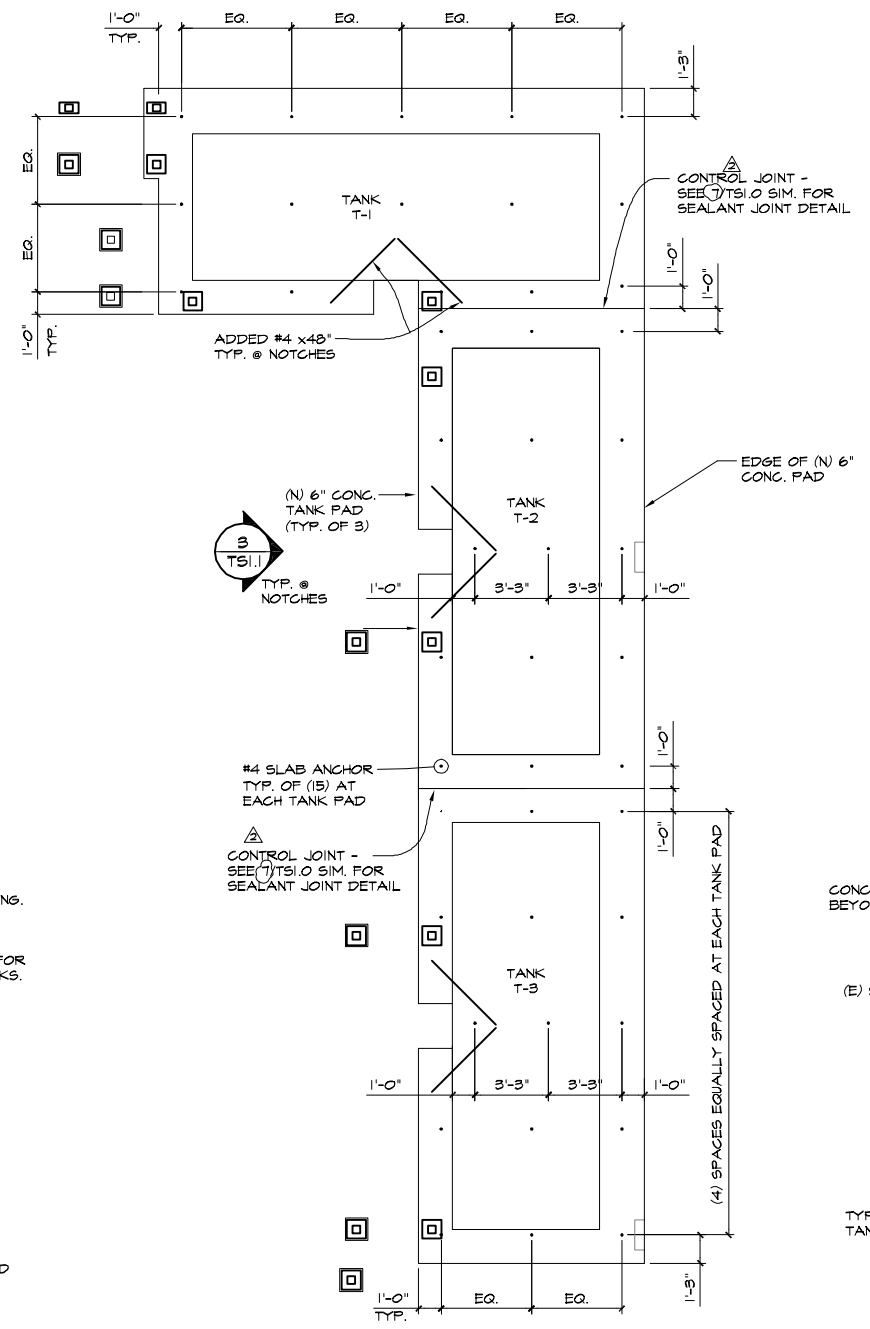

ANCHORAGE OF (N) CONC. PAD TO (E) CONC. SLAB

2 TS1.1

SCALE: 1/4"=1'-0"

NOTES: 1. SLAB ANCHOR LOCATIONS MAY BE ADJUSTED TO AVOID (E) REINFORCING. FILL ABANDONED HOLES W/ EPOXY.

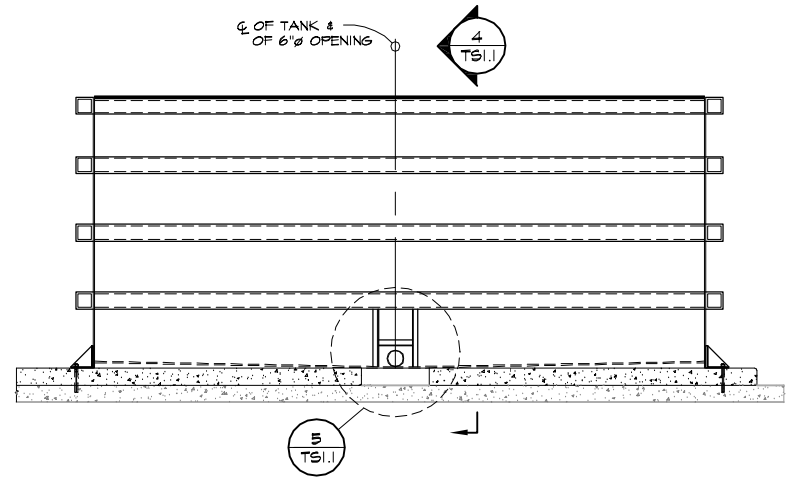

DRAINAGE HOLE DETAIL

3 TS1.1

SCALE: 3/8"=1'-0"

NOTES: 1. LIFTING TABS NOT SHOWN FOR CLARITY.

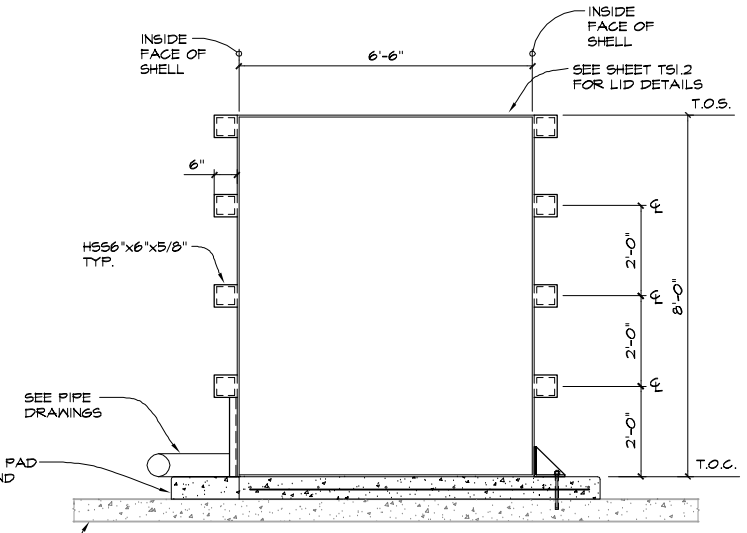

TANK ELEVATION

4 TS1.1

SCALE: 1/2"=1'-0"

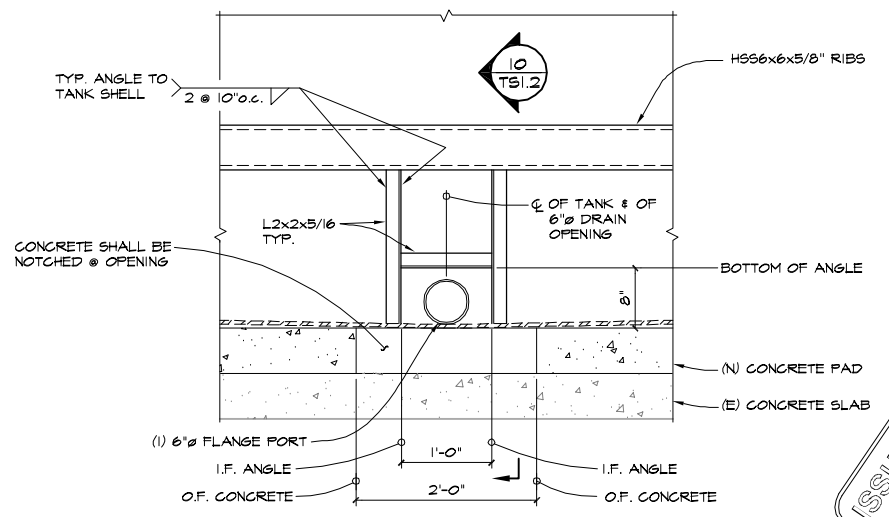

DRAINAGE HOLE DETAIL

5 TS1.1

SCALE: 1"=1'-0"

ISSUED FOR PERMIT

©TOBEY WADE CONSULTING
THIS DRAWING IS THE PROPERTY OF TOBEY WADE CONSULTING, LLC & CANNOT BE REPRODUCED IN ANY FORM WITHOUT THE EXPRESSED WRITTEN CONSENT OF TOBEY WADE CONSULTING, LLC. ANY REUSE OF THIS DRAWING WITHOUT SUCH WRITTEN CONSENT SHALL BE AT THE RECIPIENT'S SOLE RISK AND WITHOUT LIABILITY TO TOBEY WADE CONSULTING, LLC. RECIPIENT AGREES TO INDEMNIFY AND HOLD HARMLESS TOBEY WADE CONSULTING, LLC. FROM ANY AND ALL LOSSES, DAMAGES (ACTUAL AND CONSEQUENTIAL), THIS DRAWING IS NOT TO BE USED FOR ANY PROJECT OTHER THAN THE PROJECT FOR WHICH IT WAS PREPARED.

tobey wade
CONSULTING
329 Flint Street
Reno, Nevada 89501
Tel. (775) 324-7757 Fax (775) 324-7797

TANK NO.'S T-1 THRU T-3 ANCHORAGE PLAN, T1 THRU T-3, T-6 & T-7 DETAILS

PSC FERNLEY - TANK REPLACEMENT PROJECT

PREPARED FOR
AUSENCO PSI

LYON COUNTY NEVADA

FERNLEY

REVISIONS		
NO.	DESCRIPTION/DATE	BY
1	REVISED TANK T-1 - T-3 FLOOR PLATE & ANCHORAGE 5/21/12	T.R.T.
2	CONSTRUCTION CHANGES 9/7/12	T.R.T.

EXPIRES: JUNE 30, 2012
TERRENCE R. TOBEY, S.E.

JOB NO.	R371-01-11
DESIGNED	T.R.T.
DRAWN	B.C.E.
CONF.	
CHECKED	
DATE	OCT. 12, 2011

TS1.1

OF SHEETS

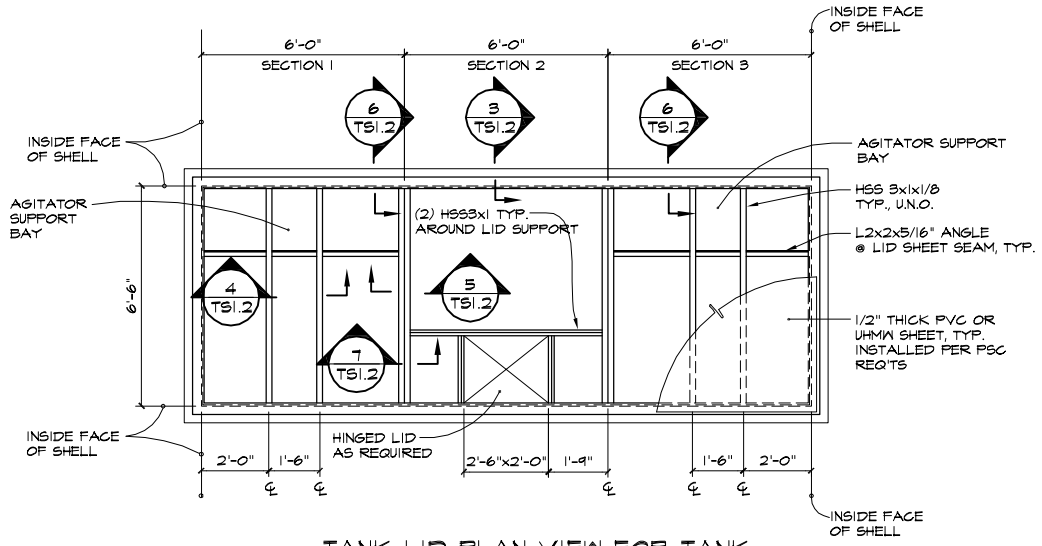

TANK LID PLAN VIEW FOR TANK NO. T-1, NO. T-2 & NO. T-3

1 TS1.2 — SCALE: 3/8"=1'-0"

NOTES: 1. MOTOR WEIGHT SHALL NOT EXCEED 400 LBS.
2. THE LID FRAMING HAS BEEN DESIGNED FOR A LIVE LOAD = 20 psf.

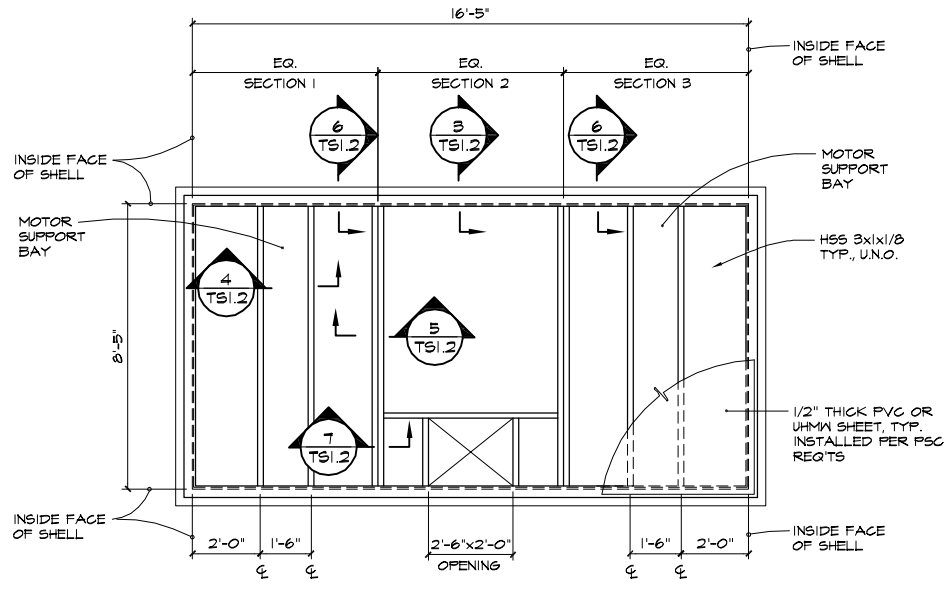

TANK LID PLAN VIEW FOR TANK NO. T-6 & NO. T-7

2 TS1.2 — SCALE: 3/8"=1'-0"

NOTES: 1. MOTOR WEIGHT SHALL NOT EXCEED 400 LBS.
2. THE LID FRAMING HAS BEEN DESIGNED FOR A LIVE LOAD = 20 psf.

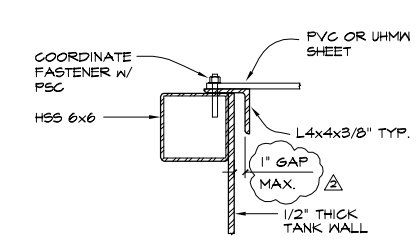

TYPICAL SECTION AT EDGE

3 TS1.2 — SCALE: 1 1/2"=1'-0"

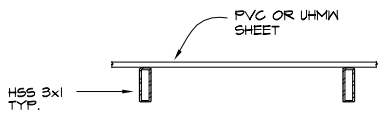

SECTION AT MOTOR SUPPORT

4 TS1.2 — SCALE: 1 1/2"=1'-0"

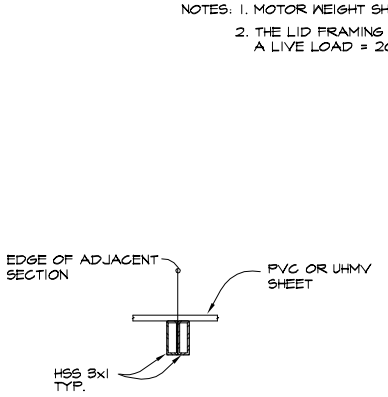

INTERIOR EDGE SUPPORT

5 TS1.2 — SCALE: 1 1/2"=1'-0"

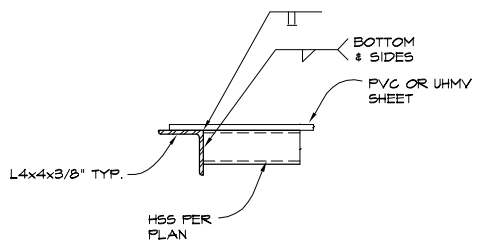

BEAM TO ANGLE CONNECTION

6 TS1.2 — SCALE: 1 1/2"=1'-0"

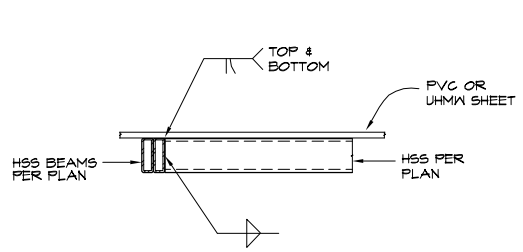

BEAM TO BEAM CONNECTION

7 TS1.2 — SCALE: 1 1/2"=1'-0"

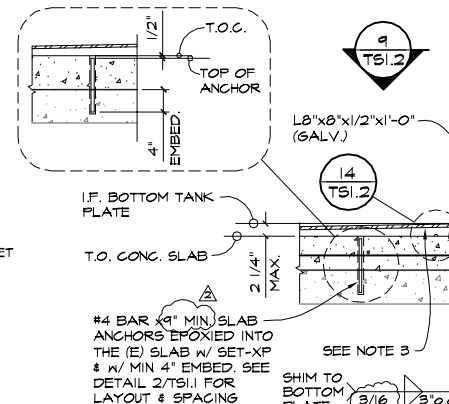

ANCHORAGE DETAIL

8 TS1.2 — SCALE: 3/4"=1'-0"

NOTES: 1. SLAB ANCHORS SHALL HAVE PERIODIC INSPECTION.
2. EPOXY ANCHORS SHALL HAVE CONTINUOUS INSPECTION.
3. 1/2" PLATE SHIMS @ ± 12"o.c.

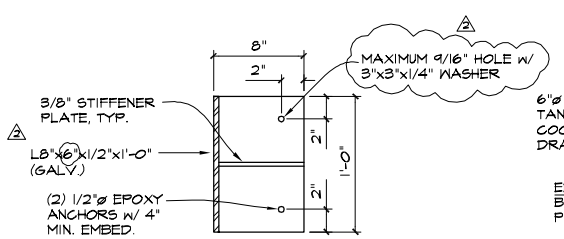

SECTION

9 TS1.2 — SCALE: 1 1/2"=1'-0"

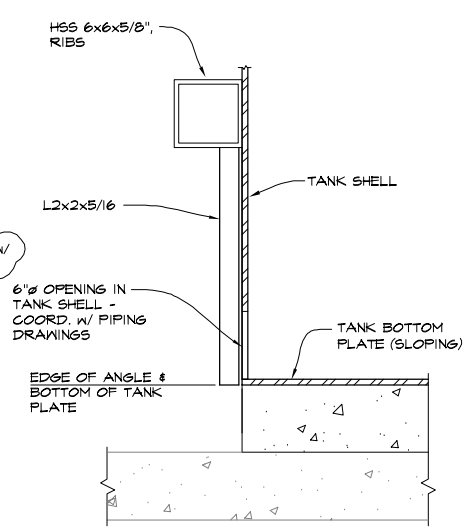

DRAINAGE HOLE DETAIL

10 TS1.2 — SCALE: 1 1/2"=1'-0"

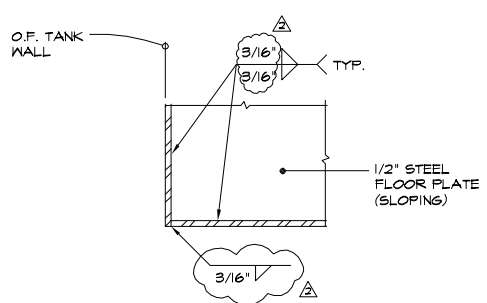

FLOOR PLATE DETAIL

11 TS1.2 — SCALE: 1 1/2"=1'-0"

NOTE: 1. ANCHORAGE ANGLE NOT SHOWN FOR CLARITY.

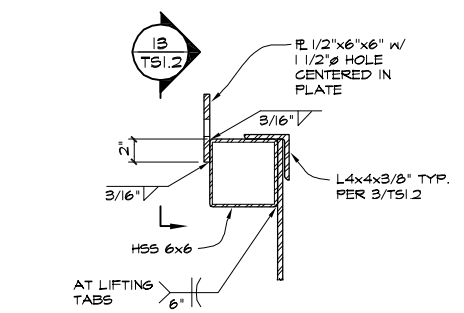

LIFTING TAB DETAIL

12 TS1.2 — SCALE: 1 1/2"=1'-0"

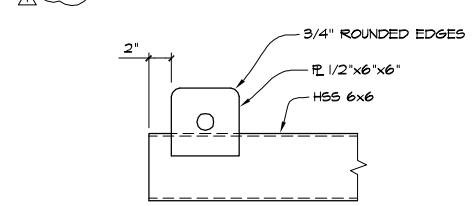

LIFTING TAB DETAIL

13 TS1.2 — SCALE: 1 1/2"=1'-0"

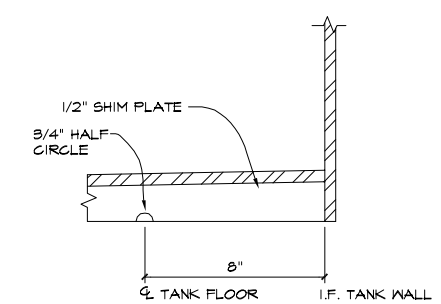

FLOOR PLATE DETAIL

14 TS1.2 — SCALE: 3"=1'-0"

NOTE: 1. ANCHORAGE ANGLE NOT SHOWN FOR CLARITY.

ISSUED FOR PERMIT

© TOBEY WADE CONSULTING
THIS DRAWING IS THE PROPERTY OF TOBEY WADE CONSULTING, USE, DISCLOSURE OR REPRODUCTION OF THIS DRAWING, IN WHOLE OR IN PART, WITHOUT THE WRITTEN CONSENT OF TOBEY WADE CONSULTING IS STRICTLY PROHIBITED. THIS DRAWING IS NOT TO BE USED FOR ANY PROJECT OTHER THAN THE PROJECT FOR WHICH IT HAS BEEN PREPARED.

tobey wade
CONSULTING
329 Flint Street
Reno, Nevada 89501
Tel. (775) 324-7757 Fax (775) 324-7797

TANK NO.'s T-1 THRU T-3, T-6 & T-7 DETAILS

PSC FERNLEY - TANK REPLACEMENT PROJECT

PREPARED FOR
AUSENCO PSI

LYON COUNTY — NEVADA

FERNLEY

REVISIONS		
NO.	DESCRIPTION/DATE	BY
1	REVISED TANK T-1 - T-3 FLOOR PLATE & ANCHORAGE 3/21/12	TRT
2	CONSTRUCTION CHANGES 9/7/12	JAB

EXPIRES: JUNE 30, 2012
TERRENCE R. TOBEY, S.E.

JOB NO.	R371-01-11
DESIGNED	T.R.T.
DRAWN	B.C.E.
CONF.	
CHECKED	
DATE	OCT. 12, 2011

TS1.2

OF SHEETS

Tank Data Sheet

RCRA Regulated? YES

Tank Location: DETOX ROOM

Tank Name: TREATMENT TANK

Tank Numbers: T-4, T-5

Process Description: NEUTRALIZATION, OXIDIZER, CYANIDE/SULFIDE TREATMENT

Vessel Fluid: AQUEOUS-BASED WASTE LIQUIDS

Specific Gravity: <1.25

Freeboard At Working Vol (ft cubed): 1' - 0"

Normal Operating Pressure: ATMOSPHERIC

Temperature (F°) AMBIENT

	Material	Thickness	Type
Bottom	CARBON STEEL PLATE	5/16" NOMINAL	FLAT
Shell	CARBON STEEL PLATE	5/16" NOMINAL	CYLINDRICAL-VERTICAL
Roof	CARBON STEEL PLATE	5/16" NOMINAL	SELF-SUPPORTING CONE

Working Volume (USG):	3,750 GALLONS	Insulation:	NONE
Nominal Volume (USG):	4,175 GALLONS	Method of Construction:	WELDED STEEL
Tank I.D. (ft):	8' - 6"	Tank Height or Length (ft):	9' - 10"
Design Code Used:	API 650.10TH EDITION	Date In Service:	TBD

Anchorage: BOLTED TO CONCRETE. Anchorage designs per 2006 IBC.

Connections:

Item No:	Size (In.)	Gasket	Description
1	24"		SIDE MANWAY
2	4"		SIDE FLANGE NOZZLE (2)
3	24"		ROOF MANWAY
4	8"		MIXER FLANGE NOZZLE
5	8"		VENT FLANGE NOZZLE
6	4"		FLANGE NOZZLE
7	3"		FLANGE NOZZLE
8	2"		FLANGE NOZZLE
9	1 1/4"		FLANGE NOZZLE (6)
10			BAFFLES (4)
11			
12			
13			
14			
15			

Tank Sketch:

Interior Coating: VersaFlex LC-25 Lock Coat, VT-40 Finish Coat, FSS50 DM Spray Polyurea

Exterior Coating: Basecoat epoxy, Topcoat Polyurethane enamel

Tank Mfger: Frontenac Engineering

Remarks:

TANK DATA SHEET

RCRA-Regulated? **YES**
Tank Location: **DETOX ROOM**
Tank Name: **TREATMENT TANK**
Tank Numbers: **T - 1, T - 2, T - 3**
Process Description: **WASTE NEUTRALIZATION, TREATMENT**
Vessel Fluid: **AQUEOUS-BASED WASTE LIQUIDS**
Specific Gravity: **≤ 1.60** Freeboard At Working Vol (ft^3): **1' – 0"**
Normal Operating Pressure (psig): **ATMOSPHERIC** Temperature (°F): **AMBIENT**

	Material	Thickness	Type
Bottom	CARBON STEEL PLATE	5/16" NOMINAL	FLAT
Shell	CARBON STEEL PLATE	5/16" NOMINAL	STRAIGHT
Roof	CARBON STEEL PLATE	¼" NOMINAL	FLAT, BOLTED

Working Volume (USG): **6,125 GALLONS** Insulation: **NONE**
Nominal Volume (USG): **7,000 GALLONS** Method of Construction: **WELDED STEEL**
Tank I.D. (ft): **6'-6" x 18'-0"** Tank Height or Length (ft): **8' – 0"**
Design Code Used: **2006 IBC** Date in Service: **PLANNED Tanks**
Anchorage: **BOLTED TO CONCRETE. Anchorage designs per 2006 IBC.**

Connections **Tank Sketch**

Item No.	Size (In.)	Gasket	Description
1	24"		ROOF MANWAY
2	4"		SIDE FLANGE NOZZLE
3	3"		FILL NOZZLE
4	8"		MIXER NOZZLE
5	4"		VENT FLANGE NOZZLE
6	4"		FLANGE ROOF NOZZLE
7	3"		FLANGE ROOF NOZZLE
8	2"		LEVEL SENSOR CONN.
9	1 ½"		FLANGE NOZZLES (3)
10			
11			
12			
13			
14			
15			

Interior Coating: **POLYSPEC VINYL ESTER NOVOLAC SYSTEM.**
Exterior Coating: **BASECOAT EPOXY, TOPCOAT POLYURETHANE ENAMEL.**
Tank Mfger: **to be determined.**

Remarks: **Planned tanks for replacement of existing tanks T-1, T-2, and T-3.**

ADDITION DATE 10/09/09
REVISION NUMBER 1

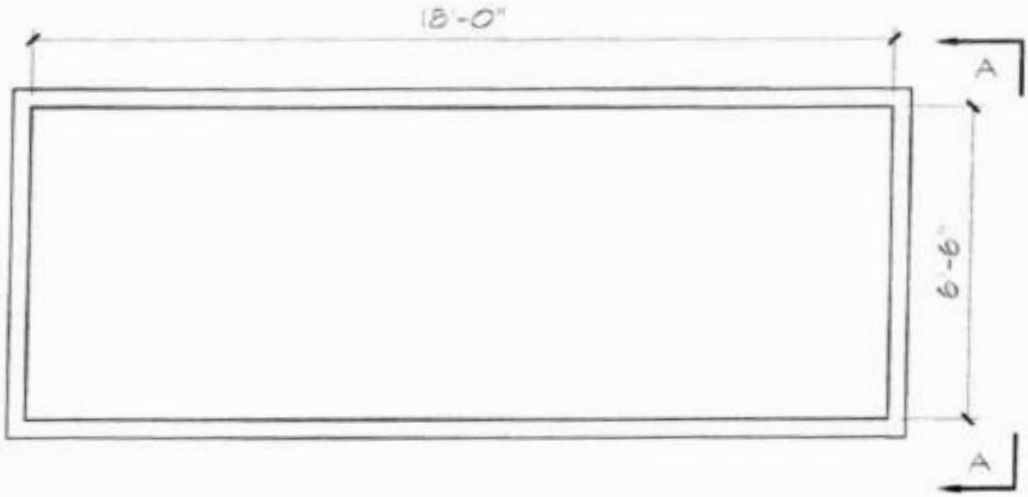

TANK NO's T-2 & T-3
PLAN VIEW

N.T.S.

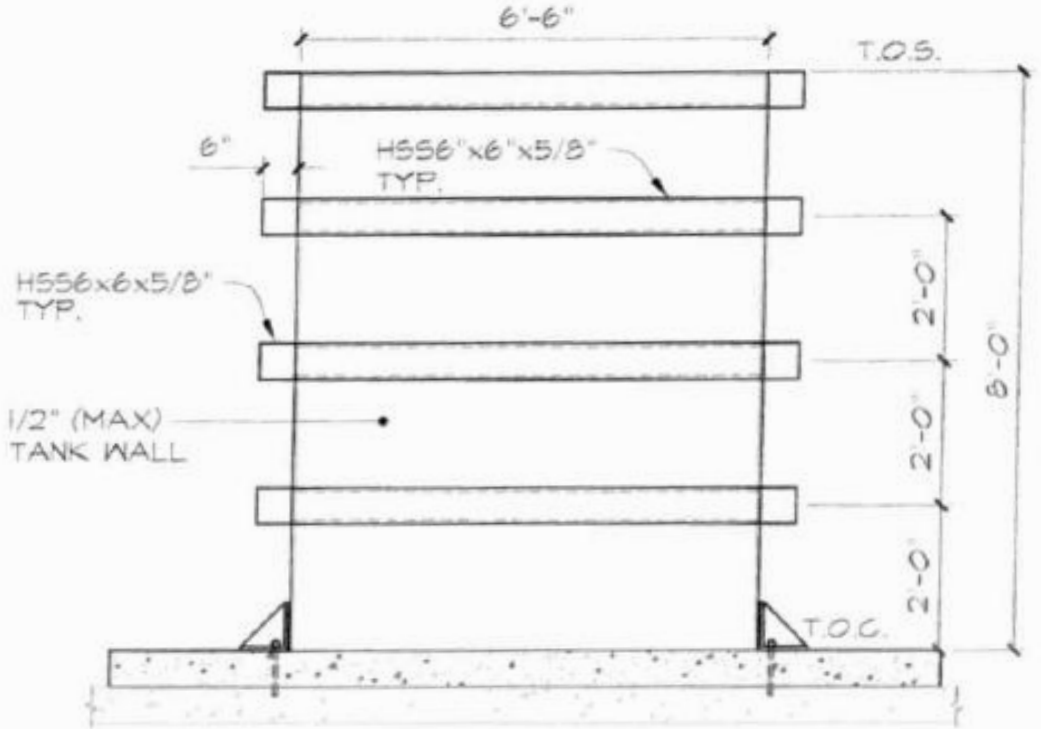

ELEVATION A-A

N.T.S.

tobey wade
CONSULTING
329 Flint Street
Reno, Nevada 89501
Tel. (775) 324-7757 Fax (775) 324-7797

PHILIP SERVICES CORPORATION
FERNLEY FACILITY
TANK NO.'s T-2 & T-3
FERNLEY, NEVADA

Project No.
R115-07-08
D-1
Date: April 15, 2009

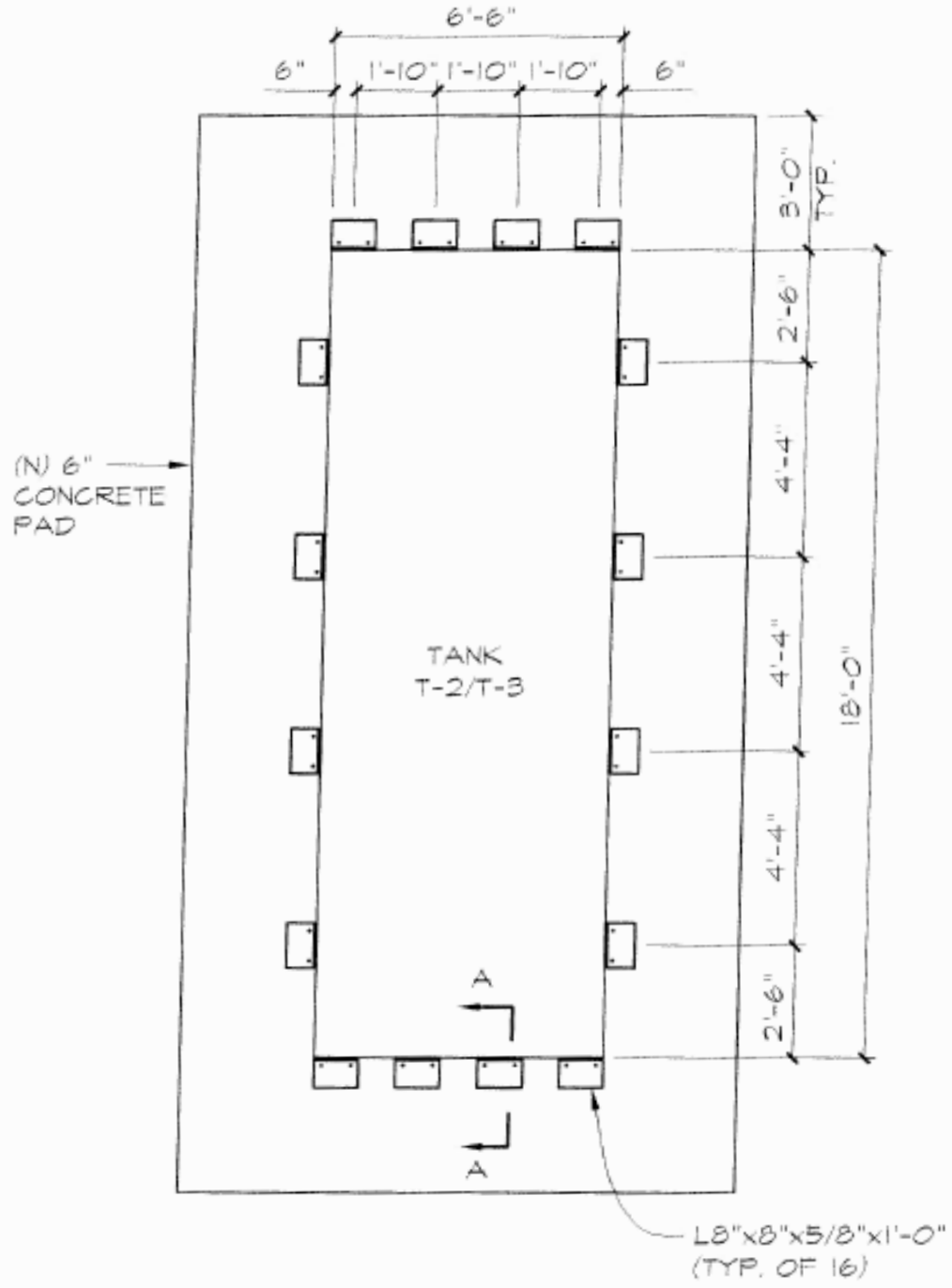

TANK NO's T-2 & T-3
ANCHORAGE PLAN

SCALE: 1/4"=1'-0"

tobey wade
CONSULTING
329 Flint Street
Reno, Nevada 89501
Tel. (775) 324-7757 Fax (775) 324-7797

PHILIP SERVICES CORPORATION
FERNLEY FACILITY
TANK NO.'s T-2 & T-3
FERNLEY, NEVADA

Project No.
R115-07-08
D-2
Date: April 15, 2009

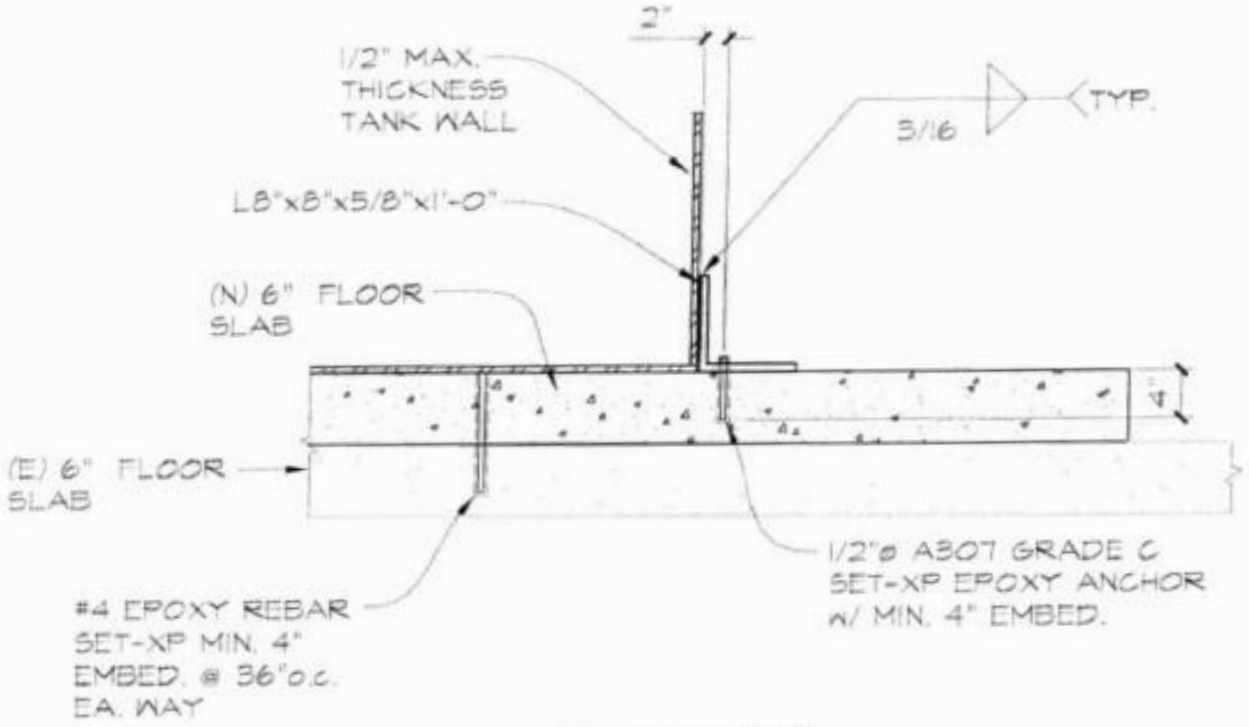

SECTION A-A

N.T.S.

tobey wade
CONSULTING
329 Flint Street
Reno, Nevada 89501
Tel. (775) 324-7757 Fax (775) 324-7797

PHILIP SERVICES CORPORATION
FERNLEY FACILITY
TANK NO.'s T-2 & T-3
FERNLEY, NEVADA

Project No.
R115-07-08
D-3
Date: April 15, 2009

SCHIFF ASSOCIATES

gbell@schiffassociates.com

www.schiffassociates.com
Consulting Corrosion Engineers – Since 1959

October 6, 2009 via email to: Burgess, Aubry [ABurgess@pscnow.com]

PSC ENVIRONMENTAL SERVICES
2095 Newlands Drive E
Fernley, NV 89408

Attention: Mr. Aubry Burgess
Maintenance Supervisor

Re: **Compatibility Certification for Planned Replacement Tank T-3**
for Treatment of Waste Corrosives
Amended Tank Replacement Plan
Fernely, NV
SA#08-1334LGL

Dear Mr. Burgess:

We review information relating to the planned replacement for Tank T-3. The planned replacement will be a coated and lined steel tank. The tank may or may not have a steel top and our recommendations include both alternatives.

Based on this information we have been provided about the historic and planned waste streams, we have determined that the internal surfaces of the planned replacement steel tank should be lined with PermaRez 333, a 120 mil heavy-duty lining system for steel substrates, combines vinyl ester novolac resin, inert mineral fillers and fiberglass or synthetic reinforcement to produce a dimensionally stable liner suited for immersion and splash/spillage exposure of concentrated acids and aggressive solvents. The compatible PolySpec 310 (primer) and PolySpec731 (non-sag gel) should be used for building a smooth cove in the transition between floor, shell and any transitions or corners. The cove will take the strain of a "hard angle" transition out of the coating system during the flex period created when head pressures and temperatures cause the steel to move. Product datasheets and specifications for the PermaRez 333 system and its components are attached.

If the tank has an open top, then the exterior of the tank should be encapsulated/coated with the same material as the lining (PermaRez 333). If a fixed roof is used, then the exterior coating systems should be a Sherwin Williams Macropoxy 646 with a Urethane top coat of Poly Lon HP also by Sherwin Williams. Exterior Film Thickness should be 4 to 6 mils DFT each of Macropoxy 646 (two coats) and 2 to 4 mils each Poly Lon HP (1

1489 W. Warm Springs Road #110 · Henderson, NV 89014
Phone: 702.966.8266 · Fax: 702.946.6767

ADDITION DATE 10/09/09

REVISION NUMBER 1

coat) with a target total exterior dry film thickness of 10 mils. Product data sheets for these exterior coatings for fixed roof tanks are attached.

As with all high-performance lining and coating systems, quality assurance and control during application is critical to service performance. We recommend full-time third-party inspection by Level III certified NACE International Coating inspectors.

I certify that based on the information provided to me that the above recommended liner system is suitable for the waste processing stream of the PSC Facility as configured and intended per the Amended Tank Replacement Program outlined in the letter from Thomas Nelson of PSC to Nevada Division of Environmental Protection dated March 25, 2008.

CERTIFICATION

I certify under penalty of law that this document and all attachments were prepared under my direction or supervision according to a system designed to assure that qualified personnel properly gather and evaluate the information submitted. Based on my inquiry of the person or persons who manage the system, or those persons directly for gathering the information, the information submitted is, to the best of my knowledge and belief, true, accurate, and complete. I am aware that there are significant penalties for submitting false information, including the possibility of fine and imprisonment for knowing violations.

CLOSURE

Our services have been performed with the usual thoroughness and competence of the engineering profession. No other warranty or representation, either expressed or implied, is included or intended.

Sincerely,
SCHIFF ASSOCIATES

GRAHAM E.C. BELL
EXP 12-31-10
MECHANICAL

Graham E.C. Bell, PE
Principal Engineer
NACE International Corrosion Specialist #5350

Attachments: PermaRez 33, FlakeRex 304, PolySpec 310, PolySpec 731 Tech Data Sheets
General Specification for Lining Steel Tanks with PermaRez
Macropoxy 646, Polylon HP Ployurethane Tech Data Sheets and MSDS

PermaRez® 333

TECHNICAL DATA SHEET

Reinforced Lining for Concrete & Steel, Acid & Solvent Resistant

DESCRIPTION

PermaRez 333, a 120 mil heavy-duty lining system for concrete and steel substrates, combines vinyl ester novolac resin, inert mineral fillers and fiberglass or synthetic reinforcement to produce a dimensionally stable liner ideally suited for immersion and splash/spillage exposure of concentrated acids and aggressive solvents.

TYPICAL APPLICATION

• Primer	PolySpec 310 (steel) / 320 (concrete) @ 2–3 mils DFT
• Detail Preparation	PolySpec 731
• Basecoat	PermaRez 333 w/F-4 Powder @ 50–60 mils
• Fabric	Type W (10 oz. woven-roving)
• Saturant	PermaRez 333 @ 25 mils
• Topcoat	PermaRez 333 w/F-4 Powder @ 50–60 mils PolySpec Smoothing Liquid #1
• Options	Carbon-Filled, Non-Silica Applications (recommended for fluoride or caustic service) – Powder: F-5 Powder – Fabric: Type V (Nexus Veil)

PERFORMANCE DATA

Compressive Strength (ASTM C-579)	12,000 psi
Tensile Strength (ASTM C-307)	3,000 psi
Flexural Strength (ASTM C-580)	12,500 psi
Hardness, Shore D (ASTM D-2240)	85–90
Bond Strength (ASTM D-4541)	425 psi
Abrasion Resistance (ASTM D-4060)	100 mg
Operating Temperature, maximum ...Dry:	350–400°F
...Wet:	Dependant on chemical exposure
VOC	1.58 lb/gal; 190 gm/L

STORAGE & INSTALLATION

Storage Environment	Dry area, 65–80°F
Application Temperature, ambient	50–95°F
Application Temperature, substrate	Minimum 5°F above dew point
Shelf Life, PROVIDED STORAGE ENVIRONMENT GUIDELINES ARE FOLLOWED	60 days
Pot Life, @ 77°F	35 minutes
Full Service, @ 77°F	7 days

Material cures more slowly at cooler temperatures, and working time will be substantially reduced at higher temperatures. In hot weather, material should be cooled to 65°F to 80°F prior to mixing and application to improve workability and avoid shortened pot life. The data shown above reflects typical results based on laboratory testing under controlled conditions. Reasonable variations from the data shown above may result.

CONSIDERATIONS & LIMITATIONS

1. For best results, work area should be humidity and temperature controlled.
2. Work area must be well ventilated. Fresh air fed respirators are recommended when working with this product.
3. Do not thin with solvents unless advised to do so by PolySpec.
4. Confirm product performance in specific chemical environment prior to use.
5. Prepare substrate according to "Surface Preparation" portion of this document.
6. Do not apply to slabs on grade unless a heavy unruptured vapor barrier has been installed under the slab.
7. Always use protective clothing, gloves and goggles consistent with OSHA regulations during use. Avoid eye and skin contact. Do not ingest or inhale. Refer to Material Safety Data Sheet for detailed safety precautions.
8. For industrial/commercial use. Installation by trained personnel only.

BENEFITS

- *Excellent resistance to aggressive acids, alkalies and solvents; withstands attack from 75% sulfuric acid, 37% hydrochloric acid and 100% phosphoric acid*
- *Seamless, high tensile strength composite*
- *Extremely low permeation rate; superior performance to acid-proof brick*
- *Excellent dimensional stability; withstands wide temperature range*
- *Temperature resistant: Wet 220°F / Dry 400°F*
- *Superior compatibility with concrete and steel when compared with conventional coatings*

RECOMMENDED USES

- *Steel process and storage tanks*
- *Concrete waste treatment sumps*
- *Trenches, pedestals, curbs*
- *Secondary containment*
- *Truck loading/unloading areas*
- *Chemical pump pads*

GENERIC DESCRIPTION

Vinyl Ester Novolac

STANDARD COLORS

Gray
(Amber liquid, before addition of Powder)

PACKAGING

5-Gallon Unit

Filler Powder sold separately; per 5-Gallon Unit:
- *125 pounds F-4 Powder, sold in 50 lb bags*
- *30 pounds F-5 Powder, sold in 30 lb pails*

Fabric sold separately:
- *Type W (10 oz cloth) sold in 2,231 ft² rolls*
- *Type V (Nexus Veil) sold in 6,000 ft² rolls*

PolySpec 731 and PolySpec Smoothing Liquid #1 sold separately

COVERAGE

15 ft² / gallon @ 120 mils
(Includes two 60 mil coats and saturant)

SEE SYSTEM DETAILS IN "TYPICAL INSTALLATION" PORTION OF THIS DOCUMENT

SURFACE PREPARATION

Concrete: Apply only to clean, dry and sound concrete substrates that are free of all coatings, sealers, curing compounds, oils, greases or any other contaminants.

- *New concrete should be cured a minimum of 28 days.*
- *Concrete that has been contaminated with chemicals or other foreign matter must be neutralized or removed.*
- *Remove any laitance or weak surface layers.*
- *Concrete should have a minimum surface tensile strength of at least 300 PSI per ASTM D-4541.*
- *Surface profile shall be CSP-3 to CSP-5 meeting ICRI (International Concrete Repair Institute) standard guideline #03732 for coating concrete, producing a profile equal to 60-grit sandpaper or coarser. Prepare surface by mechanical means to achieve this desired profile.*
- *Moisture vapor transmission should be 3 pounds or less per 1,000 square feet over a 24 hour time period, as confirmed through a calcium chloride test, as per ASTM E-1907. Quantitative relative humidity (RH) testing, ASTM F-2170, should confirm concrete RH results <75%.*
- *All surface irregularities, cracks, expansion joints and control joints should be properly addressed prior to application.*
- *Outgassing may occur due to the porosity of some concrete surfaces. To reduce the effect of outgassing, the primer and coating should be applied when the temperature of the concrete substrate is dropping. This usually occurs in the evening; however, the concrete substrate temperature should be measured with a surface thermometer for verification. Double priming will greatly reduce the effects of outgassing by additionally filling the pores in the concrete.*

Steel: For immersion service, "White Metal" abrasive blast with an anchor profile of 2–4 mils in accordance with Steel Structures Painting Council Specification SP-5-63 or NACE No. 1 is required. For splash and spillage exposure, "Near White" SP-10-63 or NACE No. 2 is required.

Refer to PolySpec Surface Preparation Guidelines for more details.

INSTALLATION STEPS

1. Prime surface with PolySpec 310 (steel) or PolySpec 320 (concrete) Primer. See data sheet for application details.
2. Use PolySpec 731 to round the corner radius of vertical to horizontal transitions, to smooth weld seams, and to patch holes and irregularities. See data sheet for application details.
3. Pour Hardener #3 into PermaRez 333 Resin pail. Mix thoroughly using a jiffy-type mixer operated at low speed until a proper blend is attained. Scrape the sides of the pail to ensure the product has been properly mixed; any unmixed material left on the side of the pail will not cure.

   NOTE: Mix ratio is 2.5 ounces Hardener #3 to one gallon PermaRez 333 Resin.
4. Stir in F-4 or F-5 filler powder and mix well until all particles are wetted out.

   NOTE: Mix ratio is approximately 25 pounds F-4 (or 6 pounds F-5) filler per mixed gallon of binder.
5. Spread basecoat mixture onto surface by trowel to a thickness of 1/16". Immediately lay the reinforcement fabric into the basecoat and press out all air pockets with a dry paint roller.
6. Saturate the reinforcement with a coat of catalyzed PermaRez 333 Resin (without powder). Roll out saturant coat until the whiteness of the reinforcement disappears.
7. After the saturated basecoat has dried, grind down any burrs that have appeared on the surface.
8. Spread topcoat mixture (PermaRez 333 with filler powder) with a steel trowel as evenly as possible to a thickness of 1/16".

   NOTE: Recoat time over saturant coat is normally 24 hours.
9. Before topcoat is allowed to dry, smooth with a paint brush dipped lightly in PolySpec Smoothing Liquid #1.
10. For best results, clean tools and equipment with PolySpec® All Purpose Cleaner, a nonflammable and non-evaporating cleaner. Always wear gloves when using this product.

1 gal R: 2.5 oz H / DOC PR333-TDS Rev 04/08

PermaRez and PolySpec are ® Registered Trademarks of PolySpec L.P.

© Copyright 2005 PolySpec L.P. All rights reserved. Published technical data and instructions are subject to change without notice. Please visit the online catalog at www.polyspec.com for the most current technical data and instructions. Or, you may contact your PolySpec representative for current technical data and instructions.

PolySpec, L.P. warrants its products to be free from defects in material and workmanship. PolySpec's sole obligation and Buyer's exclusive remedy in connection with the products shall be limited, at PolySpec's option, to either replacement of products not conforming to this warranty or credit to Buyer's account in the invoiced amount of the nonconforming products. Any claim under this Warranty must be made by Buyer to PolySpec in writing within five days of Buyer's discovery of the claimed defect, but in no event later than the expiration of the applicable shelf life, or one year from the delivery date, whichever is earlier. Buyer's failure to notify PolySpec of such nonconformance as required herein shall bar Buyer from recovery under this warranty.

PolySpec makes no other warranties concerning this product. No other warranties, either expressed or implied, or statutory, such as warranties of merchantability or fitness for a particular purpose, shall apply. In no event shall PolySpec be liable for consequential or incidental damages.

Any recommendation or suggestion relating to the use of the products made by PolySpec, whether in its technical literature, or in response to specific inquiry, or otherwise, is based on data believed to be reliable; however, the products and information are intended for use by Buyers having requisite skill and knowledge in the industry, and therefore it is for the Buyer to satisfy itself of the suitability of the products for its own particular use, and it shall be deemed that Buyer has done so, at its sole discretion and risk. Variation in environment changes in procedures of use, or extrapolation of data may cause unsatisfactory results. PolySpec cannot guarantee that color will conform to sample if provided.

POLYSPEC L.P. • 6014 GANT ROAD, HOUSTON TEXAS 77066 USA • T: 281 397 6333 • F: 281 397 6812 • www.polyspec.com

FlakeRez® 304

TECHNICAL DATA SHEET

Concrete & Steel Coating, Graphite Flake-Filled, Fluoride Resistant

DESCRIPTION

FlakeRez 304, a two component, graphite flake-filled vinyl ester novolac resin coating for primary and secondary containment, resists higher concentrations of acids and solvents where most other coatings fail. FlakeRez coatings contain inert flake reinforcement for dependability in maintaining their overlapping structure. The flakes within the chemical resistant resin matrix provide an extremely low permeation rate, which greatly reduces passage of ions through the coating.

TYPICAL APPLICATION

• Primer	PolySpec 310 (steel) / 320 (concrete) @ 2–3 mils DFT
• Detail Preparation	PolySpec 731
• Basecoat	FlakeRez 304 @ 15–20 mils DFT
• Topcoat	FlakeRez 304 @ 15–20 mils DFT

PERFORMANCE DATA

Tensile Strength (ASTM C-307)	3,500 psi
Flexural Strength (ASTM C-580)	8,500 psi
Hardness, Barcol (ASTM D-2583)	35–40
Abrasion Resistance (ASTM D-4060)	25 mg
Moisture Permeability, perm. in. (ASTM E-96)	0.002
Operating Temperature, maximum . Dry:	300–350°F
Wet:	Dependant on chemical exposure
VOC	1.23 lb/gal; 148 gm/L

STORAGE & INSTALLATION

Storage Environment	Dry enclosed area, 65–80°F
Application Temperature, ambient	50–95°F
Application Temperature, substrate	Minimum 5°F above dew point
Shelf Life, PROVIDED STORAGE ENVIRONMENT GUIDELINES ARE FOLLOWED	60 days
Pot Life, @ 77°F	30 minutes
Full Service, @ 77°F	3–5 days

Material cures more slowly at cooler temperatures, and working time will be substantially reduced at higher temperatures. In hot weather, material should be cooled to 65°F to 80°F prior to mixing and application to improve workability and avoid shortened pot life. The data shown above reflects typical results based on laboratory testing under controlled conditions. Reasonable variations from the data shown above may result.

CONSIDERATIONS & LIMITATIONS

1. For best results, work area should be humidity and temperature controlled.
2. Work area must be well ventilated. Fresh air fed respirators are recommended when working with this product.
3. Do not thin with solvents unless advised to do so by PolySpec.
4. Confirm product performance in specific chemical environment prior to use.
5. Prepare substrate according to "Surface Preparation" portion of this document.
6. Do not apply to slabs on grade unless a heavy unruptured vapor barrier has been installed under the slab.
7. Always use protective clothing, gloves and goggles consistent with OSHA regulations during use. Avoid eye and skin contact. Do not ingest or inhale. Refer to Material Safety Data Sheet for detailed safety precautions.
8. For industrial/commercial use. Installation by trained personnel only.

BENEFITS

- *Excellent resistance to fluorides such as hydrofluoric and hydrofluosilicic acids*
- *Seamless, jointless barrier coating*
- *Long-term reliability due to extremely low permeation rate of overlapping flake technology*
- *Easy application in two 20-mil coats*
- *No baking required*
- *Withstands high operating temperatures*

RECOMMENDED USES

- *Tank interior lining*
- *Process vessels*
- *Process floors*
- *Tank and effluent sump dikes*

GENERIC DESCRIPTION

Graphite Flake-Filled Vinyl Ester Novolac

STANDARD COLORS

Charcoal Gray

PACKAGING

4.5-Gallon Unit

COVERAGE

25–30 ft^2 / gallon @ 35–40 mils DFT

(INCLUDES 2 COATS @ 15–20 MILS DFT EACH)

8614 GANT ROAD • HOUSTON, TEXAS 77066 • TEL: 281-397-0033 • FAX: 281-397-6512
www.polyspec.com

PolySpec

SURFACE PREPARATION

Concrete: Apply only to clean, dry and sound concrete substrates that are free of all coatings, sealers, curing compounds, oils, greases or any other contaminants.

- *New concrete should be cured a minimum of 28 days.*
- *Concrete that has been contaminated with chemicals or other foreign matter must be neutralized or removed.*
- *Remove any laitance or weak surface layers.*
- *Concrete should have a minimum surface tensile strength of at least 300 PSI per ASTM D-4541.*
- *Surface profile shall be CSP-3 to CSP-5 meeting ICRI (International Concrete Repair Institute) standard guideline #03732 for coating concrete, producing a profile equal to 60-grit sandpaper or coarser. Prepare surface by mechanical means to achieve this desired profile.*
- *Moisture vapor transmission should be 3 pounds or less per 1,000 square feet over a 24 hour time period, as confirmed through a calcium chloride test, as per ASTM E-1907. Quantitative relative humidity (RH) testing, ASTM F-2170, should confirm concrete RH results <75%.*
- *All surface irregularities, cracks, expansion joints and control joints should be properly addressed prior to application.*
- *Outgassing may occur due to the porosity of some concrete surfaces. To reduce the effect of outgassing, the primer and coating should be applied when the temperature of the concrete substrate is dropping. This usually occurs in the evening; however, the concrete substrate temperature should be measured with a surface thermometer for verification. Double priming will greatly reduce the effects of outgassing by additionally filling the pores in the concrete.*

Steel: For immersion service, "White Metal" abrasive blast with an anchor profile of 2–4 mils in accordance with Steel Structures Painting Council Specification SP-5-63 or NACE No. 1 is required. For splash and spillage exposure, "Near White" SP-10-63 or NACE No. 2 is required.

Refer to PolySpec Surface Preparation Guidelines for more details.

INSTALLATION STEPS

1. Prime surface with PolySpec 310 (steel) or PolySpec 320 (concrete) Primer. See data sheet for application details.

   NOTE: For enclosed steel structures, if dehumidification equipment is utilized, the coating may be applied directly to the prepared substrate without the use of primer.

2. Use PolySpec 731 to round the corner radius of vertical to horizontal transitions, to smooth weld seams, and to patch holes and irregularities. See data sheet for application details.

3. Weld seams should be ground smooth prior to coating application. It may be necessary to apply a precoat of FlakeRez 304 to all seam areas.

4. Catalyze FlakeRez 304 by adding 3 ounces of Hardener #1 per gallon to the resin and mixing well with a mechanical mixer operated at low speed.

5. Apply first coating at 15–20 dry mils:

   a. **Spray Application: Conventional or Airless Spray**

      Detail all edges prior to spray application.

      When applying by spray, apply in a criss-cross pattern, taking care to avoid excessive build-up of coating.

   b. **Brush or Roller Application**

      Brush or roll onto substrate.

6. Allow product to cure for 2–4 hours @ 75°F. Apply second coat.

   NOTE: Add 3oz. wax solution per gallon to the topcoat to minimize surface tack.

   NOTE: Maximum recoat window is 48 hours.

   NOTE: Two 15–20 dry mil coats are adequate for most jobs.

   NOTE: If coating is allowed to cure for over 12 hours prior to recoating, check bond by rubbing surface with PolySpec® Smoothing Liquid #1. If coating becomes slightly tacky, then surface is ready for second coat. If surface is unaffected, sand lightly before recoating.

7. After coating is completed, allow 3–5 days for curing. Random sample checks using a Barcol Hardness gauge should indicate a minimum reading of 30.

8. Before placing into service, pinhole test the entire surface using 2,500 to 3,000 volts. All pinhole areas should be recoated and retested.

9. For best results, clean tools and equipment with PolySpec® All Purpose Cleaner, a nonflammable and non-evaporating cleaner. Always wear gloves when using this product.

1 GAL R: 3 OZ H / DOC FR304-TDS Rev 06/07

FlakeRez and PolySpec are ® Registered Trademarks of PolySpec L.P.

© Copyright 2005 PolySpec L.P. All rights reserved. Published technical data and instructions are subject to change without notice. Please visit the online catalog at www.polyspec.com for the most current technical data and instructions. Or, you may contact your PolySpec representative for current technical data and instructions.

PolySpec, L.P. warrants its products to be free from defects in material and workmanship. PolySpec's sole obligation and Buyer's exclusive remedy in connection with the products shall be limited, at PolySpec's option, to either replacement of products not conforming to this warranty or credit to Buyer's account in the invoiced amount of the nonconforming products. Any claim under this Warranty must be made by Buyer to PolySpec in writing within five days of Buyer's discovery of the claimed defect, but in no event later than the expiration of the applicable shelf life, or one year from the delivery date, whichever is earlier. Buyer's failure to notify PolySpec of such nonconformance as required herein shall bar Buyer from recovery under this warranty.

PolySpec makes no other warranties concerning this product. No other warranties, either expressed or implied, or statutory, such as warranties of merchantability or fitness for a particular purpose, shall apply. In no event shall PolySpec be liable for consequential or incidental damages.

Any recommendation or suggestion relating to the use of the products made by PolySpec, whether in its technical literature, or in response to specific inquiry, or otherwise, is based on tests believed to be reliable; however, the products and information are intended for use by Buyers having requisite skill and knowhow in the industry, and therefore it is for the Buyer to satisfy itself of the suitability of the products for its own particular use, and it shall be deemed that Buyer has done so, at its sole discretion and risk. Variation in environment, changes in procedures of use, or extrapolation of data may cause unsatisfactory results. PolySpec cannot guarantee that color will conform to sample, if provided.

PolySpec® 310

TECHNICAL DATA SHEET

Primer for Vinyl Esters & Polyesters on Steel

DESCRIPTION

PolySpec 310 primer is used on blasted steel surfaces prior to application of FlakeRez and PermaRez coatings and lining systems.

TYPICAL APPLICATION

• Primer	PolySpec 310 @ 250–350 ft²/gallon
• Overcoat	Flooring or Lining System from PolySpec

PERFORMANCE DATA

Tensile Strength (ASTM D-412)	10,000 psi
Elongation (ASTM D-638)	10–12%
Hardness, Barcol	30

STORAGE & INSTALLATION

Storage Environment	Dry area, 65–80°F
Application Temperature, ambient	50–95°F
Application Temperature, substrate	Minimum 5°F above dew point
Shelf Life, PROVIDED STORAGE ENVIRONMENT GUIDELINES ARE FOLLOWED	60 days
Pot Life, @ 77°F	25 minutes
Minimum Recoat, @77°F	6–8 hours

Material cures more slowly at cooler temperatures, and working time will be substantially reduced at higher temperatures. In hot weather, material should be cooled to 65°F to 80°F prior to mixing and application to improve workability and avoid shortened pot life. The data shown above reflects typical results based on laboratory testing under controlled conditions. Reasonable variations from the data shown above may result.

CONSIDERATIONS & LIMITATIONS

1. Apply PolySpec 310 within eight (8) hours of the blasting operation to protect the blasted surface from rusting.
2. For best results, this product should be applied in a humidity and temperature-controlled environment.
3. Do not thin with solvents unless advised to do so by PolySpec.
4. Confirm product performance in specific chemical environment prior to use.
5. Prepare substrate according to "Surface Preparation" portion of this document.
6. Always use protective clothing, gloves and goggles consistent with OSHA regulations during use. Avoid eye and skin contact. Do not ingest or inhale. Refer to Material Safety Data Sheet for detailed safety precautions.
7. For industrial/commercial use. Installation by trained personnel only.

BENEFITS

- *Provides flexible transition between steel substrate and lining system*
  - *Excellent surface adhesion to steel substrate*
  - *Excellent bond to subsequent lining systems*
- *Protects blasted steel surface from rust*
- *Contains no lead pigment*

RECOMMENDED USES

- *Used in conjunction with FlakeRez® and PermaRez® polyester or vinyl ester coatings & lining systems for steel*

GENERIC DESCRIPTION

Primer

STANDARD COLORS

Amber

PACKAGING

1-Gallon Unit

5-Gallon Unit

COVERAGE

250–300 ft² / gallon @ 1–3 mils DFT

6614 GANT ROAD • HOUSTON, TEXAS 77066 • TEL: 281-397-8033 • FAX: 281-397-6512
www.polyspec.com

PolySpec

SURFACE PREPARATION

Steel: For immersion service, "White Metal" abrasive blast with an anchor profile of 2–4 mils in accordance with Steel Structures Painting Council Specification SP-5-63 or NACE No. 1 is required. For splash and spillage exposure, "Near White" SP-10-63 or NACE No. 2 is required.

Refer to PolySpec Surface Preparation Guidelines for more details.

INSTALLATION STEPS

NOTE: For best results, this product should be applied in a humidity and temperature-controlled environment.

NOTE: Apply PolySpec 310 within eight (8) hours of the blasting operation to protect the blasted surface from rusting.

1. Add 2 ounces of Hardener #1 per gallon of resin. Mix thoroughly using a mechanical jiffy-type mixer operated at low speed.
2. Apply by roller or spray.
3. After the prime coat is dry to the touch (usually 6–8 hours at 77°F), proceed to installation of FlakeRez® or PermaRez® coating/lining system.

   NOTE: PolySpec 310 must be recoated within 72 hours. For longer waiting periods, wipe with styrene until surface becomes tacky. If surface remains hard, sandblasting is required.
4. For best results, clean tools and equipment with PolySpec® All Purpose Cleaner, a nonflammable and non-evaporating cleaner. Always wear gloves when using this product.

IgalR : JozH / DOC PS310-TDS Rev 07/05

PolySpec, FlakeRez and PermaRez are ® Registered Trademarks of PolySpec L.P.

© Copyright 2005 PolySpec L.P. All rights reserved. Published technical data and instructions are subject to change without notice. Please visit the online catalog at www.polyspec.com for the most current technical data and instructions. Or, you may contact your PolySpec representative for current technical data and instructions.

PolySpec, L.P. warrants its products to be free from defects in material and workmanship. PolySpec's sole obligation and Buyer's exclusive remedy in connection with the products shall be limited, at PolySpec's option, to either replacement of products not conforming to this warranty or credit to Buyer's account in the invoiced amount of the nonconforming products. Any claim under this Warranty must be made by Buyer to PolySpec in writing within five days of Buyer's discovery of the claimed defect, but in no event later than the expiration of the applicable shelf life, or one year from the delivery date, whichever is earlier. Buyer's failure to notify PolySpec of such nonconformance as required herein shall bar Buyer from recovery under this warranty.

PolySpec makes no other warranties concerning this product. No other warranties, either expressed or implied, or statutory, such as warranties of merchantability or fitness for a particular purpose, shall apply. In no event shall PolySpec be liable for consequential or incidental damages.

Any recommendation or suggestion relating to the use of the products made by PolySpec, whether in its technical literature, or in response to specific inquiry, or otherwise, is based on data believed to be reliable. However, the products and information are intended for use by Buyers having requisite skill and know-how in the industry, and therefore it is for the Buyer to satisfy itself of the suitability of the products for its own particular use, and it shall be deemed that Buyer has done so at its sole discretion and risk. Variation in circumstances of use or extrapolation of data may cause unsatisfactory results. PolySpec cannot guarantee that color will conform to sample, if provided.

POLYSPEC L.P. • 9714 GANT ROAD, HOUSTON TEXAS 77066 USA • T. 281 397 8033 • F. 281 397 6512 • **www.polyspec.com**

PolySpec® 731

TECHNICAL DATA SHEET

Non-Sag Gel, for use with Vinyl Esters & Polyesters

DESCRIPTION

PolySpec 731 is a polyester putty material used with polyester and vinyl ester lining systems. It is used primarily to round the corner radius at vertical to horizontal transitions in steel and concrete prior to lining applications.

PERFORMANCE DATA

Tensile Strength (ASTM D-412)	1,800 psi
Bond Strength (ASTM D-4541)	300 psi
Viscosity	Heavy Paste
VOC	0.405 lb/gal; 296 gm/L

STORAGE & INSTALLATION

Storage Environment	Dry area, 65–80°F
Application Temperature, ambient	50–95°F
Application Temperature, substrate	Minimum 5°F above dew point
Shelf Life, PROVIDED STORAGE ENVIRONMENT GUIDELINES ARE FOLLOWED	60 days
Pot Life, @ 77°F	20–25 minutes
Set Time, @ 77°F	2–4 hours

Material cures more slowly at cooler temperatures, and working time will be substantially reduced at higher temperatures. In hot weather, material should be cooled to 65°F to 80°F prior to mixing and application to improve workability and avoid shortened pot life. The data shown above reflects typical results based on laboratory testing under controlled conditions. Reasonable variations from the data shown above may result.

CONSIDERATIONS & LIMITATIONS

1. Do not install in thicknesses greater than 1/2" in one application.
2. Unlike epoxies, PolySpec 731 does not build up heat until after the initial set has occurred, making his product well suited for use on horizontal and vertical surfaces.
3. Do not thin with solvents unless advised to do so by PolySpec.
4. Confirm product performance in specific chemical environment prior to use.
5. Prepare substrate according to "Surface Preparation" portion of this document.
6. Always use protective clothing, gloves and goggles consistent with OSHA regulations during use. Avoid eye and skin contact. Do not ingest or inhale. Refer to Material Safety Data Sheet for detailed safety precautions.
7. For industrial/commercial use. Installation by trained personnel only.

BENEFITS

- *Anti-sag formula*
- *Long recoat times*
- *Ease of application*
- *Suited for horizontal and vertical surfaces*

RECOMMENDED USES

- *Round the corner radius at vertical to horizontal transitions*
  - *concrete walls and pedestals*
  - *steel tank chimes*
- *Smooth welds*
- *Fill small pits and voids in concrete*
- *General purpose patching*

GENERIC DESCRIPTION

Polyester Putty

STANDARD COLORS

Amber

PACKAGING

5-Gallon Unit

COVERAGE

231 in^3 / gallon

6 ft^2 / gallon @ 1/4" thickness

5614 GANT ROAD • HOUSTON, TEXAS 77066 • TEL: 281-397-8033 • FAX: 281-397-8512
www.polyspec.com

PolySpec

SURFACE PREPARATION

Concrete: Apply only to clean, dry and sound concrete substrates that are free of all coatings, sealers, curing compounds, oils, greases or any other contaminants.

- *New concrete should be cured a minimum of 28 days.*
- *Concrete that has been contaminated with chemicals or other foreign matter must be neutralized or removed.*
- *Remove any laitance or weak surface layers.*
- *Concrete should have a minimum surface tensile strength of at least 300 PSI per ASTM D-4541.*
- *Surface profile shall be CSP-3 to CSP-5 meeting ICRI (International Concrete Repair Institute) standard guideline #03732 for coating concrete, producing a profile equal to 60-grit sandpaper or coarser. Prepare surface by mechanical means to achieve this desired profile.*
- *Moisture vapor transmission should be 3 pounds or less per 1,000 square feet over a 24 hour time period, as confirmed through a calcium chloride test, as per ASTM E-1907. Quantitative relative humidity (RH) testing, ASTM F-2170, should confirm concrete RH results <75%.*

Steel: For immersion service, "White Metal" abrasive blast with an anchor profile of 2–4 mils in accordance with Steel Structures Painting Council Specification SP-5-63 or NACE No. 1 is required. For splash and spillage exposure, "Near White" SP-10-63 or NACE No. 2 is required.

Refer to PolySpec Surface Preparation Guidelines for more details.

INSTALLATION STEPS

1. Prime surface with PolySpec 310 or 320 Primer. See data sheet for installation instructions.
2. Pour clear catalyst Hardener #1 into putty container. Stir well for one minute using a mechanical jiffy-type mixer operated at low speed.

   For best results (due to pot life), mix small quantities of PolySpec 731 at a time.

MIX RATIO	
• PolySpec 731 Putty	1 gallon
• Hardener #1	2 ounces

3. Trowel material onto surface using a spatula, putty knife or trowel.

   NOTE: Do not install in thicknesses greater than 1/2" in one application.

4. To smooth the surface, lightly brush the putty with a brush dipped in PolySpec Smoothing Liquid #1.

   NOTE: Some shrinkage may occur.

5. A second coat can be applied up to 72 hours after the first application.

   NOTE: Minimum recoat time is 2 hours @ 75°F.

6. For best results, clean tools and equipment with PolySpec® All Purpose Cleaner, a nonflammable and non-evaporating cleaner. Always wear gloves when using this product.

1gal Putty : 2 oz H / DOC PS731-TDS Rev 03/05

PolySpec is a ® Registered Trademark of PolySpec L.P.

© Copyright 2005 PolySpec L.P. All rights reserved. Published technical data and instructions are subject to change without notice. Please visit the online catalog at www.polyspec.com for the most current technical data and instructions. Or, you may contact your PolySpec representative for current technical data and instructions.

PolySpec, L.P. warrants its products to be free from defects in material and workmanship. PolySpec's sole obligation and Buyer's exclusive remedy in connection with the products shall be limited, at PolySpec's option, to either replacement of products not conforming to this warranty or credit to Buyer's account in the invoiced amount of the nonconforming products. Any claim under this Warranty must be made by Buyer to PolySpec in writing within five days of Buyer's discovery of the claimed defect, but in no event later than the expiration of the applicable shelf life, or one year from the delivery date, whichever is earlier. Buyer's failure to notify PolySpec of such nonconformance as required herein shall bar Buyer from recovery under this warranty.

PolySpec makes no other warranties concerning this product. No other warranties, either expressed or implied, or statutory, such as warranties of merchantability or fitness for a particular purpose, shall apply. In no event shall PolySpec be liable for consequential or incidental damages.

Any recommendation or suggestion relating to the use of the products made by PolySpec, whether in its technical literature, or in response to specific inquiry, or otherwise, is based on data believed to be reliable; however, the products and information are intended for use by Buyers having requisite skill and know-how in the industry, and therefore it is for the Buyer to satisfy itself of the suitability of the products for its own particular use, and it shall be deemed that Buyer has done so, at its sole discretion and risk. Variation in environment changes in procedures of use, or extrapolation of data may cause unsatisfactory results. PolySpec cannot guarantee that, otherwise, it will vary to sample, if provided.

POLYSPEC L.P. • 8614 GANT ROAD, HOUSTON TEXAS 77066 USA • T 281 397 0033 • F 281 397 6612 • www.polyspec.com

GENERAL SPECIFICATION FOR LINING STEEL TANKS WITH PERMAREZ® 333 CHEMICAL RESISTANT LINING

1.0 General

1.1 This specification covers the minimum requirements for installing PermaRez 333 Lining to the interior surfaces of steel tanks. Application should be done in accordance with this guideline by contractors qualified in installing this product.

1.2 A qualified contractor is defined as one with 1) a minimum of five years of experience in installing similar systems, 2) demonstrated financial stability in warranting work and 3) certification by PolySpec Corporation.

1.3 The work to be performed shall include furnishing of all labor, materials, tools and equipment required for lining all steel surfaces as outlined in this specification.

2.0 References

2.1 National Association of Corrosion Engineers (NACE):

NACE Standard RP0178-91 - Fabrication Details, Surface Finish Requirements, and Proper Design Considerations for Tanks and Vessels to be Lined for Immersion Service.

NACE Standard RP0188-90 - Discontinuity (Holiday) Testing of Protective Coatings.

NACE Standard RP0287-91 - Field Measurement of Surface Profile of Abrasive Blast Cleaned Steel Surfaces Using a Replica Tape.

NACE Standard RP0288-94 - Inspection of Linings on Steel and Concrete.

NACE Standard TM0170-70 - Visual Standards for Surfaces of New Steel Air Blast Cleaned with Sand Abrasive.

NACE No. 1 - White Metal Blast Cleaning.

2.2 Steel Structures Painting Council (SSPC):

SSPC-VIS-1-89 - Visual Standard for Abrasive Blast Cleaned Steel.

SSPC-SP 5 - White Metal Blast Cleaning.

3.0 Materials

Materials shall be manufactured by PolySpec Corporation (Phone 281-397-0033; Fax 281-397-6512) as indicated below:

3.1 PermaRez 333 Lining Resin

A pre-promoted vinyl ester novolac resin for saturating fiberglass and synthetic veils.

3.2 PermaRez 333 Topcoat Resin

A pre-promoted vinyl ester novolac resin containing a wax solution used for topcoating.

3.3 PolySpec[7] 300 Primer

A 10% high elongation vinyl ester primer with a minimum tensile bond to carbon steel of 1300 psi.

3.4 PolySpec[7] 730 Pre-Surfacer

A silica filled coating used for filling small holes and pits in steel surfaces prior to lining.

3.5 PolySpec[7] 731 Putty

A very high viscosity silica filled polyester putty for application to chime area and for smoothing welds prior to lining.

3.6 Fiberglass Chopped Strand Mat and Woven Roving

Reinforcement used with lining resin to provide high tensile strength.

3.7 Hardener #1

Methyl Ethyl Ketone Peroxide catalyst for the above resin systems. Hardener should be added at 1-1/2 to 2 oz. per gallon of resin product.

4.0 Delivery and Storage

4.1 All lining materials shall be delivered to the jobsite in their original, unopened containers with the proper, fully legible labels attached. Damaged containers shall be set apart and returned to the manufacturer for replacement.

4.2 Whenever possible, the work area and mixing area should be covered from exposure to direct sunlight. Due to limited shelf life, materials should be stored in their tightly sealed original containers in a dry place at temperatures between 65 and 80° F. Materials hall be used soon after containers have been opened. Shelf life for PermaRez 333 is 30 days from date of manufacture. Lining materials should only be applied at temperatures between 50 and 95° F.

5.0 Safety and Tank Preparation

5.1 All the preparation and application steps in this guideline specification shall be in accordance with manufacturer's MSDS instructions as well as Owner's site conditions and applicable Federal, state, and local rules and regulations.

5.2 Precautions should be taken when working with styrene based materials. Use materials only in adequately ventilated areas, keep away from open flames, and store in dry, covered areas. Organic peroxides are extremely volatile and shall be stored in a special location away from sources of heat.

5.3 Workers should always wear protective clothing, gloves and eyewear when working with these products. Respiratory protection is required.

5.4 Tanks shall be disconnected, commercially cleaned, and freed of gas below toxic and explosive limits by Owner.

5.5 The tank shall be well ventilated and equipped with sufficient explosion-proof equipment to remove dust and fumes from the tank interior.

5.6 All interior lighting shall be explosion-proof. All electrical equipment shall employ a ground fault interrupter.

5.7 Dehumidification equipment is required when working with vinyl ester resin based materials.

6.0 Tank Fabrication Requirements

6.1 Internal stiffeners and brackets shall be made of pipes and rods instead of angles and channels.

6.2 Internal welds shall be continuous but not necessarily smooth.

6.3 All sharp corners and edges of internal structural members shall be rounded

to a radius of 1/8" minimum.

6.4 Flanged connections should not be under 2" in diameter.

6.5 Small diameter nozzle inserts made of vinyl ester fiberglass reinforced material shall be provided and installed by the contractor.

7.0 Surface Preparation

7.1 All weld splatter shall be removed, and all burrs and sharp edges shall be ground down.

7.2 Surfaces to be lined shall be blasted to a SSPC-SP 5 or NACE No. 1 "White Metal" blast.

7.3 An anchor mil profile of 2-1/2-3 mils is required.

7.4 A non-silica grit, such as Black Beauty, is required (except boiler slag).

7.5 All traces of abrasive media and dust shall be removed after blasting.

8.0 Application

8.1 Priming. The blasted surface shall be primed before the surface begins to form rust. If rust begins to form, the surface shall be re-blasted. Apply one coat of PolySpec[7] 300 Primer by spray or roller. Primer resin is catalyzed by adding 1-1/2 to 2 oz. of Hardener #1 to a gallon of resin. Working time is limited, so the primer should be quickly applied. Recommended primer thickness is about 2-4 mils. Contractor shall take care to avoid excessive build-up of primer.

8.2 Putty. PolySpec[7] 731 Putty shall be catalyzed and applied by putty knife to the following areas:

a. Small pits, depressions and imperfections.

b. Welded plates, protrusions and lap joints (to smooth the surface transition).

c. The chime area to form a smooth radius.

d. Any riveted seams, where applicable.

8.3 Laminating Resin. Lining application may proceed once the primer is dry to the touch (usually after 6-8 hours at 70° F.) If the lining is delayed longer than three days, the surface may have to be re-primed.

The lay-up operation shall proceed as follows:

a. Cut two or three layers of chopped strand mat. Allowances shall be made for staggered joints with at least a 2" overlap.

b. Catalyze the resin with Hardener #1 at a rate of 1-1/2 to 2 oz./gallon of resin. Mix well.

c. Apply a heavy coat of catalyzed resin onto the surface by roller or spray.

d. Lay a fiberglass mat into the wet resin. Press the mat out using a serrated roller. All mat fibers shall be wetted out so that the whiteness of the mat disappears. Repeat until three bubble-free layers of chopped strand mat have been installed in one application.

e. Care should be taken that the mat is neither too dry nor too resin rich.

Each section of fiberglass shall overlap the next section by at least 3".

The bottom lay-up operation shall proceed with successive parallel courses with a 3" overlap.

8.4 Topcoat. A final topcoat shall be applied by roller or spray to all lined surfaces. This acts as a sealer to prevent air from inhibiting the ultimate cure. The entire lined area should be reinspected as outlined below. Patches can be made to the topcoat without grinding down the resin topcoat.

9.0 Inspection/Quality Assurance

9.1 There will be a pre-job meeting attended by all personnel including Owner, Contractor/Subcontractor, Safety Engineer, Inspector and Lining Manufacturer Representative.

9.2 All inspections shall be recorded and shall include the following information:

Date and time of day
Weather conditions (air and surface, humidity)
Description of surface preparation
Thicknesses per coat
Visual inspection of workmanship

9.3 Application temperature shall be at least 5 degrees above the dew point.

9.4 The Contractor shall take mil profile readings at periodic intervals during the blasting process.

9.5 After lamination, the entire lined surface should be inspected for defects such as resin puddling, wrinkles, burrs, bubbles and uncured resin.

9.6 The Contractor shall randomly test the lining thickness with a dry film mil gauge. Total dry film thickness is a minimum of 100 mils.

9.7 To test curability of the lining, the Contractor shall randomly test the surface hardness with a Barcol Hardness Tester. The lining should show a minimum reading of 30 after 24 hours of curing and 40 after five to seven days of curing.

9.8 Pinholes in the lining should be detected using a Holiday Detector set at a minimum of 10,000 volts or 100 volts/mil.

9.9 Defects in the lining shall be repaired with a patch of the resin/fiberglass lining that extends at least 3" over the patched area. The patch should be applied using the same techniques as outlined above. Where it is necessary to cut into the lining to remove an inferior section, the depression should be filled with putty prior to the application of the patch.

9.10 Retest all patched areas following the above steps.

10.0 Warranty

10.1 Manufacturer shall warrant that its products are free from defects. Manufacturer shall provide a materials warranty to the Owner for a period of one year from date of manufacture. Liability, if any, is limited to product replacement.

10.2 Manufacturer and contractor may also provide a joint warranty for product installation for a period of one year from date of installation. The contract shall specifically stipulate what constitutes a failure of the coating system and the operating conditions for the coating system. Liability, if any, for the manufacturer is limited to product replacement and, for the contractor, re-installation costs. This warranty specifically excludes liabilities for consequential or incidental damages.

Industrial & Marine Coatings

4.53 MACROPOXY® 646 FAST CURE EPOXY

PART A B58-600 SERIES
PART B B58V600 HARDENER

PRODUCT INFORMATION

Revised 9/07

PRODUCT DESCRIPTION

MACROPOXY 646 FAST CURE EPOXY is a high solids, high build, fast drying, polyamide epoxy designed to protect steel and concrete in industrial exposures. Ideal for maintenance painting and fabrication shop applications. The high solids content ensures adequate protection of sharp edges, corners, and welds. This product can be applied directly to marginally prepared steel surfaces.

- Low VOC
- Low odor
- Chemical resistant
- Abrasion resistant

RECOMMENDED USES

- Marine applications
- Fabrication shops
- Pulp and paper mills
- Power plants
- Offshore platforms
- Refineries
- Chemical plants
- Tank exteriors
- Water treatment plants
- Mill White and Black are acceptable for immersion use for salt water and fresh water, not acceptable for potable water
- Suitable for use in USDA inspected facilities

Conforms to AWWA D102-03 OCS #5

PRODUCT CHARACTERISTICS

Finish: Semi-Gloss

Color: Mill White, Black and a wide range of colors available through tinting

Volume Solids: 72% ± 2%, mixed
Mill White

Weight Solids: 85% ± 2%, mixed
Mill White

VOC (EPA Method 24): Unreduced: <250 g/L; 2.08 lb/gal
mixed Reduced 10%: <300 g/L; 2.50 lb/gal

Mix Ratio: 1:1 by volume

Recommended Spreading Rate per coat:

Wet mils:	7.0 - 13.5
Dry mils:	5.0 - 10.0*
Coverage:	116 - 232 sq ft/gal approximate

NOTE: Brush or roll application may require multiple coats to achieve maximum film thickness and uniformity of appearance.
* See Recommended Systems

Drying Schedule @ 7.0 mils wet and 50% RH:

	@ 40°F	@ 77°F	@ 100°F
To touch:	4-5 hours	2 hours	1½ hours
To handle:	48 hours	8 hours	4½ hours
To recoat:			
minimum:	48 hours	8 hours	4½ hours
maximum:	1 year	1 year	1 year
Cure for			
service:	10 days	7 days	4 days
immersion:	14 days	7 days	4 days

If maximum recoat time is exceeded, abrade surface before recoating.
Drying time is temperature, humidity and film thickness dependent.

Pot Life:	10 hours	4 hours	2 hours
Sweat-in-time:	30 minutes	30 minutes	15 minutes

Shelf Life: 36 months, unopened
Store indoors at 40°F to 100°F.

Flash Point: 91°F, TCC, mixed

Reducer/Clean Up: Reducer, R7K15
In California: Reducer R7K111 or Oxsol 100

PERFORMANCE CHARACTERISTICS

System Tested: (unless otherwise indicated)
Substrate: Steel
Surface Preparation: SSPC-SP10
1 ct. Macropoxy 646 Fast Cure @ 6.0 mils dft

Abrasion Resistance:
Method: ASTM D4060, CS17 wheel, 1000 cycles, 1 kg load
Result: 84 mg loss

Accelerated Weathering - QUV, Zinc Clad II Plus Primer:
Method: ASTM D4587, QUV-A, 12,000 hours
Results: passes

Adhesion:
Method: ASTM D4541
Result: 1,037 psi

Corrosion Weathering, Zinc Clad II Plus Primer:
Method: ASTM D5894, 36 cycles, 12,000 hours
Result: Rating 10 per ASTM D714 for blistering
Rating 9 per ASTM D610 for rusting

Direct Impact Resistance:
Method: ASTM D2794
Result: 30 in. lb.

Dry Heat Resistance:
Method: ASTM D2485
Result: 250°F

Exterior Durability:
Method: 1 year at 45° South
Result: Excellent, chalks

Flexibility:
Method: ASTM D522, 180° bend, 3/4" mandrel
Result: Passes

Humidity Resistance
Method: ASTM D4585, 6000 hrs
Result: No blistering, cracking, or rusting

Immersion:
Method: 1 year fresh and salt water
Result: Passes, no rusting, blistering, or loss of adhesion

Irradiation-Effects on Coatings used in Nuclear Power Plants
Method: ANSI 5.12 / ASTM D4082-89
Result: Passes

Pencil Hardness:
Method: ASTM D3363
Result: 3H

Water Vapor Permeance:
Method: ASTM D1653, Method B
Result: 1.16 US perms

Salt Fog Resistance, Zinc Clad II Plus Primer::
Method: ASTM B117, 6,500 hours
Result: Rating 10 per ASTM D610 for rusting
Rating 9 per ASTM D1654 for corrosion

Slip Coefficient, Mill White:
Method: AISC Specification for Structural Joints Using ASTM A325 or ASTM A490 Bolts
Result: Class A, 0.36

Epoxy coatings may darken or discolor following application and curing.

continued on back

Industrial & Marine Coatings

4.53 MACROPOXY® 646 FAST CURE EPOXY

PART A B58-600 SERIES
PART B B58V600 HARDENER

PRODUCT INFORMATION

RECOMMENDED SYSTEMS

Immersion and atmospheric:

Steel:
2 cts. Macropoxy 646 @ 5.0 - 10.0 mils dft/ct

Concrete/Masonry, smooth:
2 cts. Macropoxy 646 @ 5.0 - 10.0 mils dft/ct

Concrete Block:
1 ct. Kem Cati-Coat HS Epoxy Filler/Sealer @ 10.0 - 20.0 mils dft, as needed to fill voids and provide a continuous substrate.
2 cts. Macropoxy 646 @ 5.0 - 10.0 mils dft/ct

Atmospheric:
***Steel:**
(Shop applied system, new construction, AWWA D102-03, can also be used at 3 mils minimum dft when used as an intermediate coat as part of a multi-coat system)
1 ct. Macropoxy 646 Fast Cure Epoxy @ 3.0 - 6.0 mils dft
1-2 cts. of recommended topcoat

Steel:
1 ct. Recoatable Epoxy Primer @ 4.0 - 6.0 mils dft
2 cts. Macropoxy 646 @ 5.0 - 10.0 mils dft/ct

***Steel:**
1 ct. Macropoxy 646 @ 4.0 - 6.0 mils dft
1-2 cts. Acrolon 218 Polyurethane @ 3.0 - 6.0 mils dft/ct
or Hi-Solids Polyurethane @ 3.0 - 5.0 mils dft/ct
or SherThane 2K Urethane @ 2.0 - 4.0 mils dft/ct

Steel:
2 cts. Macropoxy 646 @ 5.0 - 10.0 mils dft/ct
1-2 cts. Tile-Clad HS Epoxy @ 2.5 - 4.0 mils dft/ct

Steel:
1 ct. Zinc Clad II Plus @ 3.0 - 6.0 mils dft
1 ct. Macropoxy 646 @ 5.0 - 10.0 mils dft
1-2 cts. Acrolon 218 Polyurethane @ 3.0 - 6.0 mils dft/ct

Steel:
1 ct. Zinc Clad III HS @ 3.0 - 5.0 mils dft
or Zinc Clad IV @ 3.0 - 5.0 mils dft
1 ct. Macropoxy 646 @ 5.0 - 10.0 mils dft
1-2 cts. Acrolon 218 Polyurethane @ 3.0 - 6.0 mils dft/ct

Aluminum:
2 cts. Macropoxy 646 @ 5.0 - 10.0 mils dft/ct

Galvanizing:
2 cts. Macropoxy 646 @ 5.0 - 10.0 mils dft/ct

The systems listed above are representative of the product's use. Other systems may be appropriate.

SURFACE PREPARATION

Surface must be clean, dry, and in sound condition. Remove all oil, dust, grease, dirt, loose rust, and other foreign material to ensure good adhesion.
Refer to product Application Bulletin for detailed surface preparation information.
Minimum recommended surface preparation:

Iron & Steel	
Atmospheric:	SSPC-SP2/3
Immersion:	SSPC-SP10/NACE 2, 2-3 mil profile
Aluminum:	SSPC-SP1
Galvanizing:	SSPC-SP1
Concrete & Masonry	
Atmospheric:	SSPC-SP13/NACE 6, or ICRI 03732, CSP 1-3
Immersion:	SSPC-SP13/NACE 6-4.3.1 or 4.3.2, or ICRI 03732, CSP 1-3

TINTING

Tint Part A with 844 Colorants at 150% strength. Five minutes minimum mixing on a mechanical shaker is required for complete mixing of color.

Tinting is not recommended for immersion service.

APPLICATION CONDITIONS

Temperature:	40°F minimum, 140°F maximum (air, surface, and material)
	At least 5°F above dew point
Relative humidity:	85% maximum

Refer to product Application Bulletin for detailed application information.

ORDERING INFORMATION

Packaging:	
Part A:	1 and 5 gallon containers
Part B:	1 and 5 gallon containers
Weight per gallon:	12.9 ± 0.2 lb mixed, may vary by color

SAFETY PRECAUTIONS

Refer to the MSDS sheet before use.

Published technical data and instructions are subject to change without notice. Contact your Sherwin-Williams representative for additional technical data and instructions.

DISCLAIMER

The information and recommendations set forth in this Product Data Sheet are based upon tests conducted by or on behalf of The Sherwin-Williams Company. Such information and recommendations set forth herein are subject to change and pertain to the product offered at the time of publication. Consult your Sherwin-Williams representative to obtain the most recent Product Data Information and Application Bulletin.

WARRANTY

The Sherwin-Williams Company warrants our products to be free of manufacturing defects in accord with applicable Sherwin-Williams quality control procedures. Liability for products proven defective, if any, is limited to replacement of the defective product or the refund of the purchase price paid for the defective product as determined by Sherwin-Williams. NO OTHER WARRANTY OR GUARANTEE OF ANY KIND IS MADE BY SHERWIN-WILLIAMS, EXPRESSED OR IMPLIED, STATUTORY, BY OPERATION OF LAW OR OTHERWISE, INCLUDING MERCHANTABILITY AND FITNESS FOR A PARTICULAR PURPOSE.

Industrial & Marine Coatings

4.53A MACROPOXY® 646 FAST CURE EPOXY

PART A B58-600
PART B B58V600
SERIES HARDENER

APPLICATION BULLETIN

Revised 9/07

SURFACE PREPARATION

Surface must be clean, dry, and in sound condition. Remove all oil, dust, grease, dirt, loose rust, and other foreign material to ensure adequate adhesion.

Iron & Steel, Atmospheric Service:
Minimum surface preparation is Hand Tool Clean per SSPC-SP2. Remove all oil and grease from surface by Solvent Cleaning per SSPC-SP1. For better performance, use Commercial Blast Cleaning per SSPC-SP6/NACE 3, blast clean all surfaces using a sharp, angular abrasive for optimum surface profile (2 mils). Prime any bare steel within 8 hours or before flash rusting occurs.

Iron & Steel, Immersion Service:
Remove all oil and grease from surface by Solvent Cleaning per SSPC-SP1. Minimum surface preparation is Near White Metal Blast Cleaning per SSPC-SP10/NACE 2. Blast clean all surfaces using a sharp, angular abrasive for optimum surface profile (2-3 mils). Remove all weld spatter and round all sharp edges by grinding. Prime any bare steel the same day as it is cleaned.

Aluminum
Remove all oil, grease, dirt, oxide and other foreign material by Solvent Cleaning per SSPC-SP1.

Galvanized Steel
Allow to weather a minimum of six months prior to coating. Solvent Clean per SSPC-SP1 (recommended solvent is VM&P Naphtha). When weathering is not possible, or the surface has been treated with chromates or silicates, first Solvent Clean per SSPC-SP1 and apply a test patch. Allow paint to dry at least one week before testing adhesion. If adhesion is poor, brush blasting per SSPC-SP7 is necessary to remove these treatments. Rusty galvanizing requires a minimum of Hand Tool Cleaning per SSPC-SP2, prime the area the same day as cleaned.

Concrete and Masonry, Atmospheric Service:
For surface preparation, refer to NACE 6/SSPC-SP13, or ICRI 03732, CSP 1-3. Surfaces should be thoroughly clean and dry. Concrete and mortar must be cured at least 28 days @ 75°F. Remove all loose mortar and foreign material. Surface must be free of laitance, concrete dust, dirt, form release agents, moisture curing membranes, loose cement and hardeners. Fill bug holes, air pockets and other voids with a cement patching compound. Weathered masonry and soft or porous cement board must be brush blasted or power tool cleaned to remove loosely adhering contamination and to get to a hard, firm surface. Laitance must be removed by etching with a 10% muriatic acid solution and thoroughly neutralized with water.

Concrete and Masonry, Immersion Service:
For surface preparation, refer to SSPC-SP13/NACE 6, Section 4.3.1 or 4.3.2, or ICRI 03732, CSP 1-3.

Previously Painted Surfaces
If in sound condition, clean the surface of all foreign material. Smooth, hard or glossy coatings and surfaces should be dulled by abrading the surface. Apply a test area, allowing paint to dry one week before testing adhesion. If adhesion is poor, or if this product attacks the previous finish, removal of the previous coating may be necessary. If paint is peeling or badly weathered, clean surface to sound substrate and treat as a new surface as above.

APPLICATION CONDITIONS

Temperature:	40°F minimum, 140°F maximum (air, surface, and material) At least 5°F above dew point
Relative humidity:	85% maximum

APPLICATION EQUIPMENT

The following is a guide. Changes in pressures and tip sizes may be needed for proper spray characteristics. Always purge spray equipment before use with listed reducer. Any reduction must be compliant with existing VOC regulations and compatible with the existing environmental and application conditions.

Reducer/Clean Up ..... Reducer R7K15
In California ..... Reducer R7K111

Airless Spray
Pump 30:1
Pressure ..... 2800 - 3000 psi
Hose ..... 1/4" ID
Tip ..... .017" - .023"
Filter ..... 60 mesh
Reduction ..... As needed up to 10% by volume

Conventional Spray
Gun ..... DeVilbiss MBC-510
Fluid Tip ..... E
Air Nozzle 704
Atomization Pressure .. 60-65 psi
Fluid Pressure ..... 10-20 psi
Reduction ..... As needed up to 10% by volume
Requires oil and moisture separators

Brush
Brush ..... Nylon/Polyester or Natural Bristle
Reduction ..... Not recommended

Roller
Cover ..... 3/8" woven with phenolic core
Reduction ..... Not recommended

If specific application equipment is listed above, equivalent equipment may be substituted.

continued on back

Industrial & Marine Coatings

4.53A MACROPOXY® 646 FAST CURE EPOXY

PART A B58-600
PART B B58V600
SERIES HARDENER

APPLICATION BULLETIN

APPLICATION PROCEDURES

Surface preparation must be completed as indicated.

Mix contents of each component thoroughly with power agitation. Make certain no pigment remains on the bottom of the can. Then combine one part by volume of Part A with one part by volume of Part B. Thoroughly agitate the mixture with power agitation. Allow the material to sweat-in as indicated prior to application. Re-stir before using.

If reducer solvent is used, add only after both components have been thoroughly mixed, after sweat-in.

Apply paint to the recommended film thickness and spreading rate as indicated below:

Recommended Spreading Rate per coat:

Wet mils:	7.0 - 13.5
Dry mils:	5.0 - 10.0*
Coverage:	116 - 232 sq ft/gal approximate

NOTE: Brush or roll application may require multiple coats to achieve maximum film thickness and uniformity of appearance.
* See Recommended Systems

Drying Schedule @ 7.0 mils wet and 50% RH:

	@ 40°F	@ 77°F	@ 100°F
To touch:	4-5 hours	2 hours	1½ hours
To handle:	48 hours	8 hours	4½ hours
To recoat:			
minimum:	48 hours	8 hours	4½ hours
maximum:	1 year	1 year	1 year
Cure for			
service:	10 days	7 days	4 days
immersion:	14 days	7 days	4 days

If maximum recoat time is exceeded, abrade surface before recoating. Drying time is temperature, humidity and film thickness dependent.

Pot Life:	10 hours	4 hours	2 hours
Sweat-In-time:	30 minutes	30 minutes	15 minutes

Application of coating above maximum or below minimum recommended spreading rate may adversely affect coating performance.

PERFORMANCE TIPS

Stripe coat all crevices, welds, and sharp angles to prevent early failure in these areas.

When using spray application, use a 50% overlap with each pass of the gun to avoid holidays, bare areas, and pinholes. If necessary, cross spray at a right angle

Spreading rates are calculated on volume solids and do not include an application loss factor due to surface profile, roughness or porosity of the surface, skill and technique of the applicator, method of application, various surface irregularities, material lost during mixing, spillage, overthinning, climatic conditions, and excessive film build.

Excessive reduction of material can affect film build, appearance, and adhesion.

Do not mix previously catalyzed material with new.

Do not apply the material beyond recommended pot life.

In order to avoid blockage of spray equipment, clean equipment before use or before periods of extended downtime with Reducer R7K15. In California use Reducer R7K111.

Tinting is not recommended for immersion service.

Use only Mil White and Black for immersion service.

Quik-Kick Epoxy Accelerator is acceptable for use. See data page 4.99 for details.

Refer to Product Information sheet for additional performance characteristics and properties.

CLEAN UP INSTRUCTIONS

Clean spills and spatters immediately with Reducer R7K15. Clean tools immediately after use with Reducer R7K15. In California use Reducer R7K111. Follow manufacturer's safety recommendations when using any solvent.

SAFETY PRECAUTIONS

Refer to the MSDS sheet before use.

Published technical data and instructions are subject to change without notice. Contact your Sherwin-Williams representative for additional technical data and instructions.

MATERIAL SAFETY DATA SHEET

B58W610
12 00

DATE OF PREPARATION
Mar 26, 2009

SECTION 1 — PRODUCT AND COMPANY IDENTIFICATION

PRODUCT NUMBER
B58W610
PRODUCT NAME
MACROPOXY® 646 Fast Cure Epoxy Coating (Part A), Mill White
MANUFACTURER'S NAME
THE SHERWIN-WILLIAMS COMPANY
101 Prospect Avenue N.W.
Cleveland, OH 44115

Telephone Numbers and Websites

Product Information	www.sherwin-williams.com
Regulatory Information	(216) 566-2902 www.paintdocs.com
Medical Emergency	(216) 566-2917
Transportation Emergency*	(800) 424-9300
**for Chemical Emergency ONLY (spill, leak, fire, exposure, or accident)*	

SECTION 2 — COMPOSITION/INFORMATION ON INGREDIENTS

% by Weight	CAS Number	Ingredient	Units	Vapor Pressure
3	100-41-4	**Ethylbenzene**		
		ACGIH TLV	100 PPM	7.1 mm
		ACGIH TLV	125 PPM STEL	
		OSHA PEL	100 PPM	
		OSHA PEL	125 PPM STEL	
15	1330-20-7	**Xylene**		
		ACGIH TLV	100 PPM	5.9 mm
		ACGIH TLV	150 PPM STEL	
		OSHA PEL	100 PPM	
		OSHA PEL	150 PPM STEL	
11	68410-23-1	**Polyamide**		
		ACGIH TLV	Not Available	
		OSHA PEL	Not Available	
9	14807-96-6	**Talc**		
		ACGIH TLV	2 mg/m3 as Resp. Dust	
		OSHA PEL	2 mg/m3 as Resp. Dust	
31	13463-67-7	**Titanium Dioxide**		
		ACGIH TLV	10 mg/m3 as Dust	
		OSHA PEL	10 mg/m3 Total Dust	
		OSHA PEL	5 mg/m3 Respirable Fraction	

SECTION 3 — HAZARDS IDENTIFICATION

ROUTES OF EXPOSURE
INHALATION of vapor or spray mist.
EYE or SKIN contact with the product, vapor or spray mist.

HMIS Codes

Health	3*
Flammability	3
Reactivity	0

EFFECTS OF OVEREXPOSURE
EYES: Irritation.
SKIN: Prolonged or repeated exposure may cause irritation.
INHALATION: Irritation of the upper respiratory system.

May cause nervous system depression. Extreme overexposure may result in unconsciousness and possibly death.
Prolonged overexposure to solvent ingredients in Section 2 may cause adverse effects to the liver, urinary and reproductive systems.

SIGNS AND SYMPTOMS OF OVEREXPOSURE
Headache, dizziness, nausea, and loss of coordination are indications of excessive exposure to vapors or spray mists.
Redness and itching or burning sensation may indicate eye or excessive skin exposure.

MEDICAL CONDITIONS AGGRAVATED BY EXPOSURE
May cause allergic skin reaction in susceptible persons or skin sensitization.
CANCER INFORMATION
For complete discussion of toxicology data refer to Section 11.

SECTION 4 — FIRST AID MEASURES

EYES: Flush eyes with large amounts of water for 15 minutes. Get medical attention.
SKIN: Wash affected area thoroughly with soap and water.
Remove contaminated clothing and launder before re-use.
INHALATION: If affected, remove from exposure. Restore breathing. Keep warm and quiet.
INGESTION: Do not induce vomiting. Get medical attention immediately.

SECTION 5 — FIRE FIGHTING MEASURES

FLASH POINT	LEL	UEL	FLAMMABILITY CLASSIFICATION
85 °F PMCC	1.0	7.0	RED LABEL -- Flammable, Flash below 100 °F (38 °C)

EXTINGUISHING MEDIA
Carbon Dioxide, Dry Chemical, Foam
UNUSUAL FIRE AND EXPLOSION HAZARDS
Closed containers may explode when exposed to extreme heat.
Application to hot surfaces requires special precautions.
During emergency conditions overexposure to decomposition products may cause a health hazard. Symptoms may not be immediately apparent. Obtain medical attention.
SPECIAL FIRE FIGHTING PROCEDURES
Full protective equipment including self-contained breathing apparatus should be used.
Water spray may be ineffective. If water is used, fog nozzles are preferable. Water may be used to cool closed containers to prevent pressure build-up and possible autoignition or explosion when exposed to extreme heat.

SECTION 6 — ACCIDENTAL RELEASE MEASURES

STEPS TO BE TAKEN IN CASE MATERIAL IS RELEASED OR SPILLED
- Remove all sources of ignition. Ventilate the area.
- Remove with inert absorbent.

SECTION 7 — HANDLING AND STORAGE

STORAGE CATEGORY
DOL Storage Class IC
PRECAUTIONS TO BE TAKEN IN HANDLING AND STORAGE
Contents are FLAMMABLE. Keep away from heat, sparks, and open flame.
During use and until all vapors are gone: Keep area ventilated - Do not smoke - Extinguish all flames, pilot lights, and heaters - Turn off stoves, electric tools and appliances, and any other sources of ignition.
Consult NFPA Code. Use approved Bonding and Grounding procedures.
Keep container closed when not in use. Transfer only to approved containers with complete and appropriate labeling. Do not take internally. Keep out of the reach of children.

SECTION 8 — EXPOSURE CONTROLS/PERSONAL PROTECTION

PRECAUTIONS TO BE TAKEN IN USE
Use only with adequate ventilation.
Avoid contact with skin and eyes. Avoid breathing vapor and spray mist.
Wash hands after using.
This coating may contain materials classified as nuisance particulates (listed "as Dust" in Section 2) which may be present at hazardous levels only during sanding or abrading of the dried film. If no specific dusts are listed in Section 2, the applicable limits for nuisance dusts are ACGIH TLV 10 mg/m3 (total dust), 3 mg/m3 (respirable fraction), OSHA PEL 15 mg/m3 (total dust), 5 mg/m3 (respirable fraction).
VENTILATION
Local exhaust preferable. General exhaust acceptable if the exposure to materials in Section 2 is maintained below applicable exposure limits. Refer to OSHA Standards 1910.94, 1910.107, 1910.108.
RESPIRATORY PROTECTION
If personal exposure cannot be controlled below applicable limits by ventilation, wear a properly fitted organic vapor/particulate respirator approved by NIOSH/MSHA for protection against materials in Section 2.
When sanding or abrading the dried film, wear a dust/mist respirator approved by NIOSH/MSHA for dust which may be generated from this product, underlying paint, or the abrasive.
PROTECTIVE GLOVES
Wear gloves which are recommended by glove supplier for protection against materials in Section 2.
EYE PROTECTION
Wear safety spectacles with unperforated sideshields.

OTHER PRECAUTIONS

This product must be mixed with other components before use. Before opening the packages, READ AND FOLLOW WARNING LABELS ON ALL COMPONENTS.

Intentional misuse by deliberately concentrating and inhaling the contents can be harmful or fatal.

SECTION 9 — PHYSICAL AND CHEMICAL PROPERTIES

PRODUCT WEIGHT	12.19 lb/gal	1460 g/l
SPECIFIC GRAVITY	1.47	
BOILING POINT	277 - 292 °F	136 - 144 °C
MELTING POINT	Not Available	
VOLATILE VOLUME	29%	
EVAPORATION RATE	Slower than ether	
VAPOR DENSITY	Heavier than air	
SOLUBILITY IN WATER	N.A.	

VOLATILE ORGANIC COMPOUNDS (VOC Theoretical - As Packaged)

2.11lb/gal	253g/l	Less Water and Federally Exempt Solvents
2.11lb/gal	253g/l	Emitted VOC

SECTION 10 — STABILITY AND REACTIVITY

STABILITY — Stable

CONDITIONS TO AVOID

None known.

INCOMPATIBILITY

None known.

HAZARDOUS DECOMPOSITION PRODUCTS

By fire: Carbon Dioxide, Carbon Monoxide

HAZARDOUS POLYMERIZATION

Will not occur

SECTION 11 — TOXICOLOGICAL INFORMATION

CHRONIC HEALTH HAZARDS

Reports have associated repeated and prolonged overexposure to solvents with permanent brain and nervous system damage.

Ethylbenzene is classified by IARC as possibly carcinogenic to humans (2B) based on inadequate evidence in humans and sufficient evidence in laboratory animals. Lifetime inhalation exposure of rats and mice to high ethylbenzene concentrations resulted in increases in certain types of cancer, including kidney tumors in rats and lung and liver tumors in mice. These effects were not observed in animals exposed to lower concentrations. There is no evidence that ethylbenzene causes cancer in humans.

IARC's Monograph No. 93 reports there is sufficient evidence of carcinogenicity in experimental rats exposed to titanium dioxide but inadequate evidence for carcinogenicity in humans and has assigned a Group 2B rating. In addition, the IARC summary concludes, "No significant exposure to titanium dioxide is thought to occur during the use of products in which titanium is bound to other materials, such as paint."

TOXICOLOGY DATA

CAS No.	Ingredient Name			
100-41-4	Ethylbenzene			
		LC50 RAT	4HR	Not Available
		LD50 RAT		3500 mg/kg
1330-20-7	Xylene			
		LC50 RAT	4HR	5000 ppm
		LD50 RAT		4300 mg/kg
68410-23-1	Polyamide			
		LC50 RAT	4HR	Not Available
		LD50 RAT		8000. mg/kg
14807-96-6	Talc			
		LC50 RAT	4HR	Not Available
		LD50 RAT		Not Available
13463-67-7	Titanium Dioxide			
		LC50 RAT	4HR	Not Available
		LD50 RAT		Not Available

SECTION 12 — ECOLOGICAL INFORMATION

ECOTOXICOLOGICAL INFORMATION

No data available.

SECTION 13 — DISPOSAL CONSIDERATIONS

WASTE DISPOSAL METHOD

Waste from this product may be hazardous as defined under the Resource Conservation and Recovery Act (RCRA) 40 CFR 261.
Waste must be tested for ignitability to determine the applicable EPA hazardous waste numbers.
Incinerate in approved facility. Do not incinerate closed container. Dispose of in accordance with Federal, State/Provincial, and Local regulations regarding pollution.

SECTION 14 — TRANSPORT INFORMATION

US Ground (DOT)

1 Gallon and Less may be Classed as CONSUMER COMMODITY, ORM-D
Larger Containers are Regulated as:
UN1263, PAINT, 3, PG III, (ERG#128)

DOT (Dept of Transportation) Hazardous Substances & Reportable Quantities

Ethyl benzene 1000 lb RQ
Xylenes (isomers and mixture) 100 lb RQ

Bulk Containers may be Shipped as (check reportable quantities):

RQ, UN1263, PAINT, 3, PG III, (XYLENES (ISOMERS AND MIXTURE)), (ERG#128)

Canada (TDG)

UN1263, PAINT, CLASS 3, PG III, LIMITED QUANTITY, (ERG#128)

IMO

UN1263, PAINT, CLASS 3, PG III, (29 C c.c.), EmS F-E, S-E

SECTION 15 — REGULATORY INFORMATION

SARA 313 *(40 CFR 372.65C)* SUPPLIER NOTIFICATION

CAS No.	CHEMICAL/COMPOUND	% by WT	% Element
100-41-4	Ethylbenzene	3	
1330-20-7	Xylene	15	

CALIFORNIA PROPOSITION 65

WARNING: This product contains chemicals known to the State of California to cause cancer and birth defects or other reproductive harm.

TSCA CERTIFICATION

All chemicals in this product are listed, or are exempt from listing, on the TSCA Inventory.

SECTION 16 — OTHER INFORMATION

This product has been classified in accordance with the hazard criteria of the Canadian Controlled Products Regulations (CPR) and the MSDS contains all of the information required by the CPR.

The above information pertains to this product as currently formulated, and is based on the information available at this time. Addition of reducers or other additives to this product may substantially alter the composition and hazards of the product. Since conditions of use are outside our control, we make no warranties, express or implied, and assume no liability in connection with any use of this information.

Industrial & Marine Coatings

5.35

POLYLON HP POLYURETHANE

PART A B65-525 SERIES
PART B B65V525 HARDENER

PRODUCT INFORMATION

Revised 11/08

PRODUCT DESCRIPTION

POLYLON HP POLYURETHANE is a high performance, high solids two component, exterior/interior, low VOC, polyester-aliphatic urethane coating. Provides a high gloss, excellent chemical resistance, color retention, and chalk resistance.

- Outstanding resistance to a wide range of chemical, weather, and mechanical conditions
- Abrasion and impact resistant
- Superior exterior color and gloss retention.

RECOMMENDED USES

- For industrial, commercial, or marine applications where a heavy duty polyurethane coating is required
- Resists splash, spillage, and fumes of dilute acids, alkalies, solvents, and fuels
- Tank Exteriors
- Pipelines
- Bridges
- Machinery and Equipment
- Marine Vessels
- Product finish type application
- Suitable for use in USDA inspected facilities

PRODUCT CHARACTERISTICS

Finish: Gloss

Color: Wide range of colors available

Volume Solids: 70% ± 2%, mixed, may vary by color

Weight Solids: 80% ± 2%, mixed, may vary by color

VOC (EPA Method 24):
Unreduced: <250 g/L; 2.1 lb/gal
mixed
Reduced 10%: <340 g/L; 2.8 lb/gal

Mix Ratio: 2:1 by volume

Recommended Spreading Rate per coat:

Wet mils:	3.0 - 4.5
Dry mils:	2.0 - 3.0
Coverage:	380 - 570 sq ft/gal approximate

Drying Schedule @ 4.0 mils wet @ 50% RH:

	@50°F	@ 77°F	@100°F
To touch:	16 hours	2 hours	30 minutes
To handle:	24 hours	5 hours	2 hours
To recoat:			
minimum:	24 hours	12 hours	2 hours
maximum:	3 days	48 hours	24 hours
To cure:	7 days	7 days	5 days

If maximum recoat time is exceeded, abrade surface before recoating. Drying time is temperature, humidity, and film thickness dependent.

Pot Life: 5 hours 4 hours 45 minutes

Sweat-In-Time: None required

Shelf Life:
Part A: 36 months, unopened
Part B: 24 months, unopened
Store indoors at 40°F to 100°F

Flash Point: 102°F TCC, mixed

Reducer: Reducer #225, R7K225

PERFORMANCE CHARACTERISTICS

System Tested: (Unless otherwise indicated)
Substrate: Steel
Surface Preparation: SSPC-SP10
1 ct. Macropoxy 646 @6.0 mils dft
1 ct. Polylon HP @ 3.0 mils dft

Abrasion Resistance:
Method: ASTM D4060, CS17 wheel, 1000 cycles, 1 kg load
Result: 63 mg loss (average of 5 trials)

Accelerated Weathering -QUV:
Method: ASTM D4587, QUV-A 3000 hours
Results: Passes, >70% Gloss retention
Meets the requirements of SSPC Paint No.36, Level3.

Adhesion, steel:
Method: ASTM D3359 Method B Method: ASTM D4541
Result: 5B Result: 1200 psi

Direct Impact Resistance:
Method: ASTM D2794
Result: 100 in. lb.

Dry Heat Resistance:
Method: ASTM D2485
Result: 200°F, 250°F intermittent

Exterior Durability:
Method: 2 years at 45° South
Result: Excellent, 87% gloss retention

Flexibility:
Method: ASTM D522, 180° bend, 1/4" mandrel
Result: Passes

Humidity Resistance:
Method: ASTM D4585, 100°F, 2000 hours
Result: No blistering, cracking, softening or delamination

Pencil Hardness:
Method: ASTM D3363
Result: H

Salt Fog Resistance, with primer:
Method: ASTM B117, 1000 hours
Result: Rating 10 per ASTM D610 for rusting, less than 1/16" creepage at scribe. No blistering, cracking, softening, or delamination of the film.

continued on back

Industrial & Marine Coatings

5.35

POLYLON HP POLYURETHANE

PART A B65-525 **SERIES**
PART B B65V525 **HARDENER**

PRODUCT INFORMATION

RECOMMENDED SYSTEMS

Steel:
1-2 cts. Macropoxy 646 @ 5.0 - 10.0 mils dft/ct
1-2 cts. Poly-Lon HP Polyurethane @ 2.0 - 3.0 mils dft/ct

Steel:
1-2 cts. Recoatable Epoxy Primer @ 4.0 - 6.0 mils dft/ct
1-2 cts. Poly-Lon HP Polyurethane @ 2.0 - 3.0 mils dft/ct

Steel:
1 ct. Zinc Clad II Plus @ 3.0 - 5.0 mils dft
1 ct. Epolon II Epoxy Primer @ 2.0 - 4.0 mils dft
1-2 cts. Poly-Lon HP Polyurethane @ 2.0 - 3.0 mils dft/ct

Steel:
1 ct. Epoxy Mastic Aluminum II @ 6.0 mils dft
1-2 cts. Poly-Lon HP Polyurethane @ 2.0 - 3.0 mils dft/ct

Galvanizing:
1-2 cts. Epolon II Epoxy Primer @ 2.0 - 4.0 mils dft/ct
1-2 cts. Poly-Lon HP Polyurethane @ 2.0 - 3.0 mils dft/ct

Concrete/Masonry:
1 ct. Kem Cati-Coat HS Epoxy Filler/Sealer @ 10.0 - 20.0 mils dft
1-2 cts. Poly-Lon HP Polyurethane @ 2.0 - 3.0 mils dft/ct

The systems listed above are representative of the product's use. Other systems may be appropriate.

SURFACE PREPARATION

Surface must be clean, dry, and in sound condition. Remove all oil, dust, grease, dirt, loose rust, and other foreign material to ensure adequate adhesion.

Refer to product Application Bulletin for detailed surface preparation information.

Minimum recommended surface preparation:

* Iron & Steel:	SSPC-SP6/NACE 3
* Aluminum	SSPC-SP-1
* Galvanizing	SSPC-SP-1

* Primer required

TINTING

Tint Part A with 844 Colorant at 100% tint strength (white tint base and clear tint base only). Five minutes minimum mixing on a mechanical shaker is required for complete mixing of color

APPLICATION CONDITIONS

Temperature:	40°F minimum, 120°F maximum (air, surface, and material)
	At least 5°F above dew point
Relative humidity:	85% maximum

Refer to product Application Bulletin for detailed application information.

ORDERING INFORMATION

Packaging:

Part A:	1 gal
	~2 gal in a 3 gal container
Part B:	l/2 gal and 1 gal
Weight per gallon:	10.78 ± 0.2 lb mixed, may vary with color

SAFETY PRECAUTIONS

Refer to the MSDS sheet before use.

Published technical data and instructions are subject to change without notice. Contact your Sherwin-Williams representative for additional technical data and instructions.

DISCLAIMER

The information and recommendations set forth in this Product Data Sheet are based upon tests conducted by or on behalf of The Sherwin-Williams Company. Such information and recommendations set forth herein are subject to change and pertain to the product offered at the time of publication. Consult your Sherwin-Williams representative to obtain the most recent Product Data Information and Application Bulletin.

WARRANTY

The Sherwin-Williams Company warrants our products to be free of manufacturing defects in accord with applicable Sherwin-Williams quality control procedures. Liability for products proven defective, if any, is limited to replacement of the defective product or the refund of the purchase price paid for the defective product as determined by Sherwin-Williams. NO OTHER WARRANTY OR GUARANTEE OF ANY KIND IS MADE BY SHERWIN-WILLIAMS, EXPRESSED OR IMPLIED, STATUTORY, BY OPERATION OF LAW OR OTHERWISE, INCLUDING MERCHANTABILITY AND FITNESS FOR A PARTICULAR PURPOSE

Industrial & Marine Coatings

5.35A

POLYLON HP POLYURETHANE

PART A B65-525 SERIES
PART B B65V525 HARDENER

APPLICATION BULLETIN

Revised 11/08

SURFACE PREPARATION

Surface must be clean, dry, and in sound condition. Remove all oil, dust, grease, dirt, loose rust, and other foreign material to ensure adequate adhesion.

Iron & Steel
Remove all oil and grease from surface by Solvent Cleaning per SSPC-SP1. Minimum surface preparation is Commercial Blast Cleaning per SSPC-SP6/NACE 3. For better performance, use Near White Metal Blast Cleaning per SSPC-SP10/NACE 2. Blast clean all surfaces using a sharp, angular abrasive for optimum surface profile (1-2 mils). Prime any bare steel the same day as it is cleaned or before flash rusting occurs. Primer Required.

Previously Painted Surfaces:
If in sound condition, clean the surface of all foreign material. Smooth, hard or glossy coatings and surfaces should be dulled by abrading the surface. Apply a test area, allowing paint to dry one week before testing adhesion. If adhesion is poor, or if this products attacks the previous finish, removal of the previous coating may be necessary. If paint is peeling or badly weathered, clean surface to sound substrate and treat as a new surface as above.

Galvanized Steel
Allow to weather a minimum of six months prior to coating. Solvent Clean per SSPC-SP1. When weathering is not possible, or the surface has been treated with chromates or silicates, first Solvent Clean per SSPC-SP1 and apply a test patch. Allow paint to dry at least one week before testing adhesion. If adhesion is poor, brush blasting per SSPC-SP7 is necessary to remove these treatments. Rusty galvanizing requires a minimum of Hand Tool Cleaning per SSPC-SP2, prime the area the same day as cleaned or before flash rusting occurs. Primer required.

Poured Concrete
New
For surface preparation, refer to SSPC-SP13/NACE 6, or ICRI 03732, CSP 1-3. Surfaces must be clean, dry, sound and offer sufficient profile to achieve adequate adhesion. Minimum substrate cure is 28 days at 75°F. Remove all form release agents, curing compounds, salts, efflorescence, laitance, and other foreign matter by sandblasting, shotblasting, mechanical scarification, or suitable chemical means. Refer to ASTM D4260. Rinse thoroughly to achieve a final pH between 8.0 and 10.0. Allow to dry thoroughly prior to coating.
Old
Surface preparation is done in much the same manner as new concrete, however, if the concrete is contaminated with oils, grease, chemicals, etc., they must be removed by cleaning with a strong detergent. Refer to ASTM D4258. Form release agents, hardeners, etc. must be removed by sandblasting, shotblasting, mechanical scarification, or suitable chemical means. If surface deterioration presents an unacceptably rough surface, Kem Cati-Coat HS Epoxy Filler/Sealer is recommended to patch and resurface damaged concrete.
Fill all cracks, voids and bugholes with ArmorSeal Crack Filler.

Always follow the standard methods listed below:
ASTM D4258 Standard Practice for Cleaning Concrete.
ASTM D4259 Standard Practice for Abrading Concrete.
ASTM D4260 Standard Practice for Etching Concrete.
ASTM F1869 Standard Test Method for Measuring Moisture Vapor Emission Rate of Concrete.
SSPC-SP 13/Nace 6 Surface Preparation of Concrete.
ICRI 03732, Concrete Surface Preparation

APPLICATION CONDITIONS

Temperature:	40°F minimum, 120°F maximum (air, surface, and material) At least 5°F above dew point
Relative humidity:	85% maximum

APPLICATION EQUIPMENT

The following is a guide. Changes in pressures and tip sizes may be needed for proper spray characteristics. Always purge spray equipment before use with listed reducer. Any reduction must be compliant with existing VOC regulations and compatible with the existing environmental and application conditions.

Reducer .....Reducer #225, R7K225

Clean Up .....R6K30, MAK

Airless Spray
Pressure.....2400 - 3000 psi
Hose.....3/8" ID
Tip.....013" - .017"
Filter.....60 mesh
Reduction.....As needed up to 10% by volume

Conventional Spray
Gun.....Binks 95
Cap.....63P
Tip.....66
Atomization Pressure.....50 - 60 psi
Fluid Pressure.....20 - 30 psi
Reduction.....As needed up to 10% by volume

Brush
Brush.....Natural Bristle
Reduction.....As needed up to 10% by volume

Roller
Cover.....1/4" woven with phenolic core
Reduction.....As needed up to 10% by volume

If specific application equipment is not listed above, equivalent equipment may be substituted.

continued on back

SHERWIN WILLIAMS.

Industrial & Marine Coatings

5.35A

POLYLON HP POLYURETHANE

PART A B65-525 SERIES
PART B B65V525 HARDENER

APPLICATION BULLETIN

APPLICATION PROCEDURES

Surface preparation must be completed as indicated.
Mix contents of each component thoroughly with power agitation. Make certain no pigment remains on the bottom of the can. Then combine two parts by volume of Part A with one part by volume of Part B. Thoroughly agitate the mixture with power agitation. Allow the material to sweat-in as indicated. Re-stir before using.
If reducer is used, add only after both components have been thoroughly mixed.

Apply paint at the recommended film thickness and spreading rate as indicated below:

Recommended Spreading Rate per coat:

Wet mils:	3.0 - 4.5
Dry mils:	2.0 - 3.0
Coverage:	380 - 570 sq ft/gal approximate

Drying Schedule @ 4.0 mils wet @ 50% RH:

	@50°F	@77°F	@100°F
To touch:	16 hours	2 hours	30 minutes
To handle:	24 hours	5 hours	2 hours
To recoat:			
minimum:	24 hours	12 hours	2 hours
maximum:	3 days	48 hours	24 hours
To cure:	7 days	7 days	5 days

If maximum recoat time is exceeded, abrade surface before recoating. Drying time is temperature, humidity, and film thickness dependent.

Pot Life: 5 hours 4 hours 45 minutes

Sweat-in-Time: None required

Application of coating above maximum or below minimum recommended spreading rate may adversely affect coating performance.

PERFORMANCE TIPS

Stripe coat all crevices, welds, and sharp angles to prevent early failure in these areas.

When using spray application, use a 50% overlap with each pass of the gun to avoid holidays, bare areas, and pinholes. If necessary, cross spray at a right angle.

Spreading rates are calculated on volume solids and do not include an application loss factor due to surface profile, roughness or porosity of the surface, skill and technique of the applicator, method of application, various surface irregularities, material lost during mixing, spillage, overthinning, climatic conditions, and excessive film build.

Excessive reduction of material can affect film build, appearance, and adhesion.

Do not apply the material beyond recommended pot life.

Do not mix previously catalyzed material with new.

In order to avoid blockage of spray equipment, clean equipment before use or before periods of extended downtime with Reducer #R6K30.

Mixed coating is sensitive to water. Use water traps in all air lines. Moisture contact can reduce pot life and affect gloss and color.

When rolling this product, always maintain a wet edge to avoid roller marks. Roll as close to any cut-in areas as possible to eliminate visual imperfections. Roller application must be from a roller tray, not by pouring the material onto the surface.

Refer to Product Information sheet for additional performance characteristics and properties.

CLEAN UP INSTRUCTIONS

Clean spills and spatters immediately with Reducer #R6K30. Clean tools immediately after use with Reducer #R6K30. Follow manufacturer's safety recommendations when using any solvent.

SAFETY PRECAUTIONS

Refer to the MSDS sheet before use.

Published technical data and instructions are subject to change without notice. Contact your Sherwin-Williams representative for additional technical data and instructions.

DISCLAIMER

The information and recommendations set forth in this Product Data Sheet are based upon tests conducted by or on behalf of The Sherwin-Williams Company. Such information and recommendations set forth herein are subject to change and pertain to the product offered at the time of publication. Consult your Sherwin-Williams representative to obtain the most recent Product Data Information and Application Bulletin.

WARRANTY

The Sherwin-Williams Company warrants our products to be free of manufacturing defects in accord with applicable Sherwin-Williams quality control procedures. Liability for products proven defective, if any, is limited to replacement of the defective product or the refund of the purchase price paid for the defective product as determined by Sherwin-Williams. NO OTHER WARRANTY OR GUARANTEE OF ANY KIND IS MADE BY SHERWIN-WILLIAMS, EXPRESSED OR IMPLIED, STATUTORY, BY OPERATION OF LAW OR OTHERWISE, INCLUDING MERCHANTABILITY AND FITNESS FOR A PARTICULAR PURPOSE.

MATERIAL SAFETY DATA SHEET

B65W525
04 00

DATE OF PREPARATION
Mar 25, 2009

SECTION 1 — PRODUCT AND COMPANY IDENTIFICATION

PRODUCT NUMBER
B65W525
PRODUCT NAME
POLY-LON® HP Polyester Polyurethane (Part A), Extra White
MANUFACTURER'S NAME
THE SHERWIN-WILLIAMS COMPANY
101 Prospect Avenue N.W.
Cleveland, OH 44115

Telephone Numbers and Websites

Product Information	www.sherwin-williams.com
Regulatory Information	(216) 566-2902 www.paintdocs.com
Medical Emergency	(216) 566-2917
Transportation Emergency*	(800) 424-9300
**for Chemical Emergency ONLY (spill, leak, fire, exposure, or accident)*	

SECTION 2 — COMPOSITION/INFORMATION ON INGREDIENTS

% by Weight	CAS Number	Ingredient	Units	Vapor Pressure
6	110-43-0	**Methyl n-Amyl Ketone**		
		ACGIH TLV	50 PPM	3.855 mm
		OSHA PEL	100 PPM	
10	123-86-4	**n-Butyl Acetate**		
		ACGIH TLV	150 PPM	10 mm
		ACGIH TLV	200 PPM STEL	
		OSHA PEL	150 PPM	
		OSHA PEL	200 PPM STEL	
4	108-65-6	**1-Methoxy-2-Propanol Acetate**		
		ACGIH TLV	Not Available	1.8 mm
		OSHA PEL	Not Available	
1	1332-58-7	**Kaolin**		
		ACGIH TLV	2 mg/m3 as Resp. Dust	
		OSHA PEL	10 mg/m3 Total Dust	
		OSHA PEL	5 mg/m3 Respirable Fraction	
17	13463-67-7	**Titanium Dioxide**		
		ACGIH TLV	10 mg/m3 as Dust	
		OSHA PEL	10 mg/m3 Total Dust	
		OSHA PEL	5 mg/m3 Respirable Fraction	

SECTION 3 — HAZARDS IDENTIFICATION

HMIS Codes

Health	2*
Flammability	2
Reactivity	0

ROUTES OF EXPOSURE
INHALATION of vapor or spray mist.
EYE or SKIN contact with the product, vapor or spray mist.
EFFECTS OF OVEREXPOSURE
EYES: Irritation.
SKIN: Prolonged or repeated exposure may cause irritation.
INHALATION: Irritation of the upper respiratory system.

May cause nervous system depression. Extreme overexposure may result in unconsciousness and possibly death.
Prolonged overexposure to solvent ingredients in Section 2 may cause adverse effects to the liver, urinary and blood forming systems.
SIGNS AND SYMPTOMS OF OVEREXPOSURE
Headache, dizziness, nausea, and loss of coordination are indications of excessive exposure to vapors or spray mists.
Redness and itching or burning sensation may indicate eye or excessive skin exposure.

MEDICAL CONDITIONS AGGRAVATED BY EXPOSURE

May cause allergic respiratory and/or skin reaction in susceptible persons or sensitization. This effect may be delayed several hours after exposure.

Persons sensitive to isocyanates will experience increased allergic reaction on repeated exposure.

CANCER INFORMATION

For complete discussion of toxicology data refer to Section 11.

SECTION 4 — FIRST AID MEASURES

EYES: Flush eyes with large amounts of water for 15 minutes. Get medical attention.

SKIN: Wash affected area thoroughly with soap and water.
Remove contaminated clothing and launder before re-use.

INHALATION: If any breathing problems occur during use, **LEAVE THE AREA** and get fresh air. If problems remain or occur later, **IMMEDIATELY** get medical attention.

INGESTION: Do not induce vomiting. Get medical attention immediately.

SECTION 5 — FIRE FIGHTING MEASURES

FLASH POINT	LEL	UEL	FLAMMABILITY CLASSIFICATION
102 °F PMCC	1.1	13.1	Combustible, Flash above 99 and below 200 °F

EXTINGUISHING MEDIA

Carbon Dioxide, Dry Chemical, Foam

UNUSUAL FIRE AND EXPLOSION HAZARDS

Closed containers may explode when exposed to extreme heat.

Application to hot surfaces requires special precautions.

During emergency conditions overexposure to decomposition products may cause a health hazard. Symptoms may not be immediately apparent. Obtain medical attention.

SPECIAL FIRE FIGHTING PROCEDURES

Full protective equipment including self-contained breathing apparatus should be used.

Water spray may be ineffective. If water is used, fog nozzles are preferable. Water may be used to cool closed containers to prevent pressure build-up and possible autoignition or explosion when exposed to extreme heat.

SECTION 6 — ACCIDENTAL RELEASE MEASURES

STEPS TO BE TAKEN IN CASE MATERIAL IS RELEASED OR SPILLED

- Remove all sources of ignition. Ventilate the area.
- Remove with inert absorbent.

SECTION 7 — HANDLING AND STORAGE

STORAGE CATEGORY

DOL Storage Class II

PRECAUTIONS TO BE TAKEN IN HANDLING AND STORAGE

Contents are COMBUSTIBLE. Keep away from heat and open flame.

Consult NFPA Code. Use approved Bonding and Grounding procedures.

Keep container closed when not in use. Transfer only to approved containers with complete and appropriate labeling. Do not take internally. Keep out of the reach of children.

SECTION 8 — EXPOSURE CONTROLS/PERSONAL PROTECTION

PRECAUTIONS TO BE TAKEN IN USE

NO PERSON SHOULD USE THIS PRODUCT, OR BE IN THE AREA WHERE IT IS BEING USED, IF THEY HAVE CHRONIC (LONG-TERM) LUNG OR BREATHING PROBLEMS OR IF THEY EVER HAD A REACTION TO ISOCYANATES.

Use only with adequate ventilation.

Avoid contact with skin and eyes. Avoid breathing vapor and spray mist.

Wash hands after using.

This coating may contain materials classified as nuisance particulates (listed "as Dust" in Section 2) which may be present at hazardous levels only during sanding or abrading of the dried film. If no specific dusts are listed in Section 2, the applicable limits for nuisance dusts are ACGIH TLV 10 mg/m3 (total dust), 3 mg/m3 (respirable fraction), OSHA PEL 15 mg/m3 (total dust), 5 mg/m3 (respirable fraction).

VENTILATION

Local exhaust preferable. General exhaust acceptable if the exposure to materials in Section 2 is maintained below applicable exposure limits. Refer to OSHA Standards 1910.94, 1910.107, 1910.108.

RESPIRATORY PROTECTION

Where overspray is present, a positive pressure air supplied respirator (TC19C NIOSH/MSHA approved) should be worn. If unavailable, a properly fitted organic vapor/particulate respirator approved by NIOSH/MSHA for protection against materials in Section 2 may be effective. Follow respirator manufacturers directions for use. Wear the respirator for the whole time of spraying and until all vapors and mists are gone. **NO PERSONS SHOULD BE ALLOWED IN THE AREA WHERE THIS PRODUCT IS BEING USED UNLESS EQUIPPED WITH THE SAME RESPIRATOR PROTECTION RECOMMENDED FOR THE PAINTERS.**

When sanding or abrading the dried film, wear a dust/mist respirator approved by NIOSH/MSHA for dust which may be generated from this product, underlying paint, or the abrasive.

PROTECTIVE GLOVES

To prevent skin contact, wear gloves which are recommended by glove supplier for protection against materials in Section 2.

EYE PROTECTION

Wear safety spectacles with unperforated sideshields.

OTHER PROTECTIVE EQUIPMENT

Use barrier cream on exposed skin.

OTHER PRECAUTIONS

This product must be mixed with other components before use. Before opening the packages, READ AND FOLLOW WARNING LABELS ON ALL COMPONENTS.

Intentional misuse by deliberately concentrating and inhaling the contents can be harmful or fatal.

SECTION 9 — PHYSICAL AND CHEMICAL PROPERTIES

PRODUCT WEIGHT	11.51 lb/gal	1379 g/l
SPECIFIC GRAVITY	1.39	
BOILING POINT	255 - 308 °F	123 - 153 °C
MELTING POINT	Not Available	
VOLATILE VOLUME	34%	
EVAPORATION RATE	Slower than ether	
VAPOR DENSITY	Heavier than air	
SOLUBILITY IN WATER	N.A.	

VOLATILE ORGANIC COMPOUNDS (VOC Theoretical - As Packaged)

2.49lb/gal	299g/l	Less Water and Federally Exempt Solvents
2.49lb/gal	299g/l	Emitted VOC

SECTION 10 — STABILITY AND REACTIVITY

STABILITY — Stable

CONDITIONS TO AVOID

None known.

INCOMPATIBILITY

None known.

HAZARDOUS DECOMPOSITION PRODUCTS

By fire: Carbon Dioxide, Carbon Monoxide

HAZARDOUS POLYMERIZATION

Will not occur

SECTION 11 — TOXICOLOGICAL INFORMATION

CHRONIC HEALTH HAZARDS

Reports have associated repeated and prolonged overexposure to solvents with permanent brain and nervous system damage.

IARC's Monograph No. 93 reports there is sufficient evidence of carcinogenicity in experimental rats exposed to titanium dioxide but inadequate evidence for carcinogenicity in humans and has assigned a Group 2B rating. In addition, the IARC summary concludes, "No significant exposure to titanium dioxide is thought to occur during the use of products in which titanium is bound to other materials, such as paint."

TOXICOLOGY DATA

CAS No.	Ingredient Name			
110-43-0	**Methyl n-Amyl Ketone**			
		LC50 RAT	4HR	Not Available
		LD50 RAT		1670 mg/kg
123-86-4	**n-Butyl Acetate**			
		LC50 RAT	4HR	2000 ppm
		LD50 RAT		13100 mg/kg
108-65-6	**1-Methoxy-2-Propanol Acetate**			
		LC50 RAT	4HR	Not Available
		LD50 RAT		8500 mg/kg
1332-58-7	**Kaolin**			
		LC50 RAT	4HR	Not Available
		LD50 RAT		Not Available
13463-67-7	**Titanium Dioxide**			
		LC50 RAT	4HR	Not Available
		LD50 RAT		Not Available

SECTION 12 — ECOLOGICAL INFORMATION

ECOTOXICOLOGICAL INFORMATION

No data available.

SECTION 13 — DISPOSAL CONSIDERATIONS

WASTE DISPOSAL METHOD

Waste from this product may be hazardous as defined under the Resource Conservation and Recovery Act (RCRA) 40 CFR 261.
Waste must be tested for ignitability to determine the applicable EPA hazardous waste numbers.
Incinerate in approved facility. Do not incinerate closed container. Dispose of in accordance with Federal, State/Provincial, and Local regulations regarding pollution.

SECTION 14 — TRANSPORT INFORMATION

US Ground (DOT)

May be Classed as a Combustible Liquid for U.S. Ground.
UN1263, PAINT, 3, PG III, (ERG#128)

DOT (Dept of Transportation) Hazardous Substances & Reportable Quantities

Xylenes (isomers and mixture) 100 lb RQ

Bulk Containers may be Shipped as (check reportable quantities):

UN1263, PAINT, COMBUSTIBLE LIQUID, PG III, (ERG#128)

Canada (TDG)

May be Classed as a Combustible Liquid for Canadian Ground.
UN1263, PAINT, CLASS 3, PG III, (ERG#128)

IMO

UN1263, PAINT, CLASS 3, PG III, (39 C c.c.), EmS F-E, S-E

SECTION 15 — REGULATORY INFORMATION

SARA 313 *(40 CFR 372.65C)* SUPPLIER NOTIFICATION

CAS No.	CHEMICAL/COMPOUND	% by WT	% Element

No ingredients in this product are subject to SARA 313 (40 CFR 372.65C) Supplier Notification.

CALIFORNIA PROPOSITION 65

WARNING: This product contains chemicals known to the State of California to cause cancer and birth defects or other reproductive harm.

TSCA CERTIFICATION

All chemicals in this product are listed, or are exempt from listing, on the TSCA Inventory.

SECTION 16 — OTHER INFORMATION

This product has been classified in accordance with the hazard criteria of the Canadian Controlled Products Regulations (CPR) and the MSDS contains all of the information required by the CPR.

The above information pertains to this product as currently formulated, and is based on the information available at this time. Addition of reducers or other additives to this product may substantially alter the composition and hazards of the product. Since conditions of use are outside our control, we make no warranties, express or implied, and assume no liability in connection with any use of this information.

tobeywade
STRUCTURAL ENGINEERS

May 16, 2012
Project No. R115-12-12

Mr. Aubry Burgess
Plant Manager
PSC FERNLEY FACILITY
2095 Newlands Drive East
Fernley, NV 89408

RE: TANK T-3 CERTIFICATION

Dear Mr. Burgess:

In accordance with the Fernley Facility Amended Tank Replacement plan as prepared by PSC and dated March 25, 2008, each tank is required to be certified by Independent Registered Professional Engineers (IRPE's) prior to being placed into service. This letter has been prepared to document the evaluation of Tank T-3 as performed by Tobey-Wade Consulting.

Background

Tank T-3 is a structural steel tank with a working (design) capacity of 6,125 gallons. The tank has been designed in accordance with International Building Code (IBC) and American Institute of Steel Construction (AISC) requirements. The tank was fabricated by Peabody & Associates.

Infinity Corrosion Group, Inc. has evaluated the tank's suitability and compatibility for its proposed use in PSC's facility and has also certified the tank coating and lining systems. Their certifications have been provided under separate cover to PSC.

Findings

Based on our analysis, the following systems are hereby certified as being in compliance with the Amended Tank Replacement plan:

- Tank T-3 will have sufficient strength to contain the proposed waste materials without rupturing.
- Tank T-3 is situated on a reinforced concrete foundation system which is capable of adequately supporting the tank and its contents under static and dynamic conditions.

- Tank T-3 is located in an area with sufficient secondary containment as required by 40 CFR Ch. I, 264.193.
- Tank T-3 is stabile against overturning when subjected to loads based on 2006 International Building Code level seismic events.
- Tank T-3 is anchored to prevent sliding when subjected to loads based on 2006 International Building Code level seismic events. Structural Observation and Special Inspection of the anchorage system has been performed as required by the International Building Code. The Structural Observation and Special Inspection reports are attached.
- Tank T-3 has been tested for leakage and found to be watertight. The Tank Leakage Test results are included in the Tank Inspection Report, copy attached.
- The exterior of Tank T-3's shell wall has been inspected and found to be undamaged. The Tank Shell Inspection results are included in the Tank Inspection Report, copy attached.

Structural Observation, tank leakage and tank shell inspections were performed by Tobey-Wade Consulting, under my direct supervision. Special Inspections were performed by ICC-certified inspectors from Black Eagle Consulting based on anchorage requirements provided by Tobey-Wade Consulting.

Certification Statement

I certify under penalty of law that this report and all attachments were prepared under my direction and supervision in accordance with a system developed to assure that qualified personnel properly gather and evaluate the information submitted. Based on my inquiry of the person or persons who manage the system or those persons directly responsible for gathering the information, the information, submitted is, to the best of my knowledge and belief, true, accurate, and complete. I am aware that there are significant penalties for submitting false information, including the possibility of fines and imprisonment for knowing violations.

This report has been prepared in accordance with acceptable engineering practices and is subject to the assumptions and limitations stated in the report. Also note that this certification covers the aforementioned aspects of Tank T-3 only.

Please feel free to contact me at your convenience should you have any questions relating to our findings.

Sincerely,
TOBEY-WADE CONSULTING

Terrence R. Tobey

TERRENCE R. TOBEY, P.E., S.E.
Principal Structural Engineer

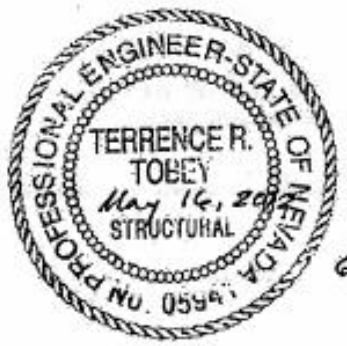

Exp.
6-30-12

TANK DATA SHEET

RCRA-Regulated? YES
Tank Location: DETOX ROOM
Tank Name: TREATMENT TANK
Tank Numbers: T - 1, T - 2, T - 3
Process Description: WASTE NEUTRALIZATION, TREATMENT
Vessel Fluid: AQUEOUS-BASED WASTE LIQUIDS
Specific Gravity: ≤ 1.50 Freeboard At Working Vol (ft^3): 1' – 0"
Normal Operating Pressure (psig): ATMOSPHERIC Temperature (°F): AMBIENT

	Material	Thickness	Type
Bottom	CARBON STEEL PLATE	5/16" NOMINAL	FLAT
Shell	CARBON STEEL PLATE	5/16" NOMINAL	STRAIGHT
Roof	CARBON STEEL PLATE	¼" NOMINAL	FLAT, BOLTED

Working Volume (USG): 5,125 GALLONS Insulation: NONE
Nominal Volume (USG): 7,000 GALLONS Method of Construction: WELDED STEEL
Tank I.D. (ft): 6'-6" x 18'-0" Tank Height or Length (ft): 8' – 0"
Design Code Used: 2006 IBC Data in Service: PLANNED Tanks
Anchorage: BOLTED TO CONCRETE. Anchorage designs per 2006 IBC.

Connections

Item No.	Size (in.)	Gasket	Description
1	24"		ROOF MANWAY
2	4"		SIDE FLANGE NOZZLE
3	3"		FILL NOZZLE
4	8"		MIXER NOZZLE
5	4"		VENT FLANGE NOZZLE
6	4"		FLANGE ROOF NOZZLE
7	3"		FLANGE ROOF NOZZLE
8	2"		LEVEL SENSOR CONN.
9	1 ½"		FLANGE NOZZLES (3)
10			
11			
12			
13			
14			
15			

Tank Sketch

Interior Coating: POLYSPEC VINYL ESTER NOVOLAC SYSTEM.
Exterior Coating: BASECOAT EPOXY, TOPCOAT POLYURETHANE ENAMEL.
Tank Mfgr: to be determined.

Remarks: Planned tanks for replacement of existing tanks T-1, T-2, and T-3.

TANK INSPECTION FORM

Philip Services Corporation / 21 EMI
PSC Fernley Facility
2095 Newlands Drive East
Fernley, NV 89408
(775)575-2760

TANK NO.: T-3

79" W x 217" long by 8' tall w/ 4 ribs T56x6

TANK SHELL INSPECTION

34 1/2" between tank shells

Date Inspected: May 14, 2012

Findings: No scrapes, dents; coating looks good

TANK ANCHORAGE STRUCTURAL OBSERVATION

Type of Anchorage System: See details

Date Inspected: May 14, 2012

# of Anchor Plates: 12

AB Type and Diameter: 1/2" ϕ

Plate Contact with Tank: Yes (welded)

Special Inspection Completed?

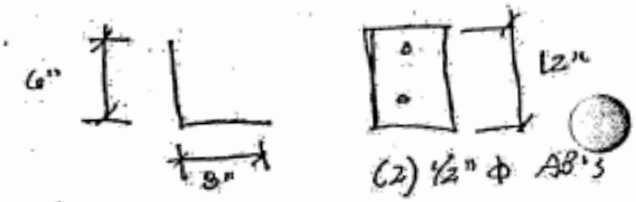

11" edge dist.

TANK LEAKAGE TEST

Date Filled: May 14, 2012 Water Level below Inspection Hatch: 28" ±

Date of Re-inspection: ~~May 15, 2012~~ Water Level below Inspection Hatch: 28±

Shell Leakage? No

Leakage on Floor/Drain Pan at Manifold?

INSPECTOR: Lawrence Tobey DATE: 5.14.12

INSPECTOR: Brandy Hall DATE: 5-15-12

Tank Ends

DAILY FIELD REPORT

BLACK EAGLE CONSULTING, INC.
GEOTECHNICAL AND CONSTRUCTION SERVICES
1345 Capital Boulevard, Suite A
Reno, NV 89502-7140
Phone: (775) 359-6600
Fax: (775) 359-7766

Project: 3 TANK Replacements	Project Number: 0560-03-1	Date: 3-23 + 3-30-12
Client: Philips Services	Contact: Aubry Burgress	Total Hrs.: 6
Location: Peabody INC	Weather:	Temp.:
Contractor:	Contact:	Stand By Hrs.:

TYPE OF INSPECTION/TESTING		CONCRETE, MORTAR & GROUT TEST DATA					
☐ Site Inspection	☐ Const. Materials Sampling	Set No.					
☐ Construction Observations	☐ Batch Plant Inspection	Mix No.					
☐ Earthwork/Mass Grading	☐ Coring Asphalt/Concrete	Time a.m. p.m.					
☐ Footings/Foundations	☐ Bldg. Pad Certification	Truck No.					
☐ Utilities (Gas, Elect, Wtr)	☐ Reinforcing Steel Insp.	Amb. Temp °F					
☐ Aggregate Base	☒ Structural Welding/Bolting	Mix. Temp °F					
☐ Asphalt Paving	☐ Masonry Inspection	Slump, inches					
☐ Portland Cement Concrete	☐ Fire Proofing Inspection	Air Content, %					
☐ Other	☐ Other	Other					

Equipment in use:

Observations/Comments:

Checked Welder Qualifications, Procedures And Fitup.

AB – Agg Base BS – Bedding Sand B – Below BG – Below Grade FG – Finished Grade FTG – Footing SF – Structural Fill SG – Subgrade SOG – Slab-on Grade

Reviewed By	Technician	Report No.

N:\Mission\Fleet\QC Field Report Template\daily field rpt locked from user files.doc

DAILY FIELD REPORT

Page 1 of 1

BLACK EAGLE CONSULTING, INC.
GEOTECHNICAL AND CONSTRUCTION SERVICES
1345 Capital Boulevard, Suite A
Reno, NV 89502-7140
Phone: (775) 359-6600
Fax: (775) 359-7766

Project: 3 TANK Replacements	Project Number: 0560-03-1	Date: 4-2 - 4/6
Client: Phillips Services	Contact: Aubry Burgess	Total Hrs.: 12½ HRS
Location: Peabody INC	Weather:	Temp.:
Contractor:	Contact:	Stand By Hrs.:

TYPE OF INSPECTION/TESTING		CONCRETE, MORTAR & GROUT TEST DATA						
☐ Site Inspection	☐ Const. Materials Sampling	Set No.						
☐ Construction Observations	☐ Batch Plant Inspection	Mix No.						
☐ Earthwork/Mass Grading	☐ Coring Asphalt/Concrete	Time a.m. p.m.						
☐ Footings/Foundations	☐ Bldg. Pad Certification	Truck No.						
☐ Utilities (Gas, Elect, Wtr)	☐ Reinforcing Steel Insp.	Amb. Temp °F						
☐ Aggregate Base	☒ Structural Welding/Bolting	Mix. Temp °F						
☐ Asphalt Paving	☐ Masonry Inspection	Slump, inches						
☐ Portland Cement Concrete	☐ Fire Proofing Inspection	Air Content, %						
☐ Other	☐ Other	Other						

Equipment in use:

Observations/Comments:

WENT over welding specification and inspected weld quality, All is acceptable in accordance with AWS D1.1.

AB = Agg Base BS = Bedding Sand B = Below BG = Below Grade FG = Finished Grade FTG = Footing SF = Structural Fill SG = Subgrade SOG = Slab-on Grade

Reviewed By	Technician	Report No.

DAILY FIELD REPORT

Page 1 of 1

BLACK EAGLE CONSULTING, INC.
GEOTECHNICAL AND CONSTRUCTION SERVICES
1345 Capital Boulevard, Suite A
Reno, NV 89502-7140
Phone: (775) 359-6600
Fax: (775) 359-7766

Project: 3 TANK Replacements	Project Number: 0560-03-1	Date: 4/9 – 4/13/12
Client: Phillips Services	Contact: Aubry Burgess	Total Hrs.: 15 1/2
Location: Peabody INC	Weather:	Temp.:
Contractor:	Contact:	Stand By Hrs.:

TYPE OF INSPECTION/TESTING		CONCRETE, MORTAR & GROUT TEST DATA					
☐ Site Inspection	☐ Const. Materials Sampling	Set No.					
☐ Construction Observations	☐ Batch Plant Inspection	Mix No.					
☐ Earthwork/Mass Grading	☐ Coring Asphalt/Concrete	Time a.m. p.m.					
☐ Footings/Foundations	☐ Bldg. Pad Certification	Truck No.					
☐ Utilities (Gas, Elect, Wtr)	☐ Reinforcing Steel Insp.	Amb. Temp °F					
☐ Aggregate Base	☐ Structural Welding/Bolting	Mix. Temp °F					
☐ Asphalt Paving	☐ Masonry Inspection	Slump, inches					
☐ Portland Cement Concrete	☐ Fire Proofing Inspection	Air Content, %					
☐ Other	☐ Other	Other					

Equipment in use:

Observations/Comments:

ALL welding is acceptable - to date. Two tank shells are complete.

AB = Agg Base BS = Bedding Sand B = Below BG = Below Grade FG = Finished Grade FTG = Footing SF = Structural Fill SG = Subgrade SOG = Slab-on Grade

Reviewed By:	Technician	Report No.

DAILY FIELD REPORT

Page 1 of 1

BLACK EAGLE CONSULTING, INC.
GEOTECHNICAL AND CONSTRUCTION SERVICES
1345 Capital Boulevard, Suite A
Reno, NV 89502-7140
Phone: (775) 359-6600
Fax: (775) 359-7766

Project: 3 Tank Replacements	Project Number: 0560-03-1	Date: 4/16 - 4/18
Client: Phillips Services	Contact: Aubry Burgess	Total Hrs.: 8 1/2
Location: Peabody ENC	Weather:	Temp.:
Contractor:	Contact:	Stand By Hrs.:

TYPE OF INSPECTION/TESTING		CONCRETE, MORTAR & GROUT TEST DATA						
☐ Site Inspection	☐ Const. Materials Sampling	Set No.						
☐ Construction Observations	☐ Batch Plant Inspection	Mix No.						
☐ Earthwork/Mass Grading	☐ Coring Asphalt/Concrete	Time a.m. p.m.						
☐ Footings/Foundations	☐ Bldg. Pad Certification	Truck No.						
☐ Utilities (Gas, Elect, Wtr)	☐ Reinforcing Steel Insp.	Amb. Temp °F						
☐ Aggregate Base	☐ Structural Welding/Bolting	Mix. Temp °F						
☐ Asphalt Paving	☐ Masonry Inspection	Slump, inches						
☐ Portland Cement Concrete	☐ Fire Proofing Inspection	Air Content, %						
☐ Other	☐ Other	Other						

Equipment in use:

Observations/Comments:

Welding on third tank is complete and welding on the three lids are complete.

AB = Agg Base BS = Bedding Sand B = Below BG = Below Grade FG = Finished Grade FTG = Footing SF = Structural Fill SG = Subgrade SOG = Slab-on Grade

Reviewed By	Technician	Report No.

DAILY FIELD REPORT

Page 1 of 1

BLACK EAGLE CONSULTING, INC.
GEOTECHNICAL AND CONSTRUCTION SERVICES
1345 Capital Boulevard, Suite A
Reno, NV 89502-7140
Phone: (775) 359-6600
Fax: (775) 359-7766

Project: 3 TANK Replacement	Project Number: 0560-03-1	Date: 4/18/12
Client: Philips Services	Contact: Aubry Burgess	Total Hrs.:
Location: Peabody, INC	Weather:	Temp.:
Contractor:	Contact:	Stand By Hrs.:

TYPE OF INSPECTION/TESTING		CONCRETE, MORTAR & GROUT TEST DATA						
☐ Site Inspection	☐ Const. Materials Sampling	Set No.						
☐ Construction Observations	☐ Batch Plant Inspection	Mix No.						
☐ Earthwork/Mass Grading	☐ Coring Asphalt/Concrete	Time a.m. p.m.						
☐ Footings/Foundations	☐ Bldg. Pad Certification	Truck No.						
☐ Utilities (Gas, Elect, Wtr)	☐ Reinforcing Steel Insp.	Amb. Temp °F						
☐ Aggregate Base	☒ Structural Welding/Bolting	Mix. Temp °F						
☐ Asphalt Paving	☐ Masonry Inspection	Slump, Inches						
☐ Portland Cement Concrete	☐ Fire Proofing Inspection	Air Content, %						
☐ Other	☐ Other	Other						

Equipment in use:

Observations/Comments: From 3/23 thru 4/18 Peabody Tnk. Fabricated 3 Replacement tanks For Philips Services. The three tanks were Fabricated to plans and Specifications and all welding is in accordance with AWS D1.1.

AB = Agg Base BS = Bedding Sand B = Below BG = Below Grade FG = Finished Grade FTG = Footing SF = Structural Fill SG = Subgrade SOG = Slab-on Grade

Reviewed By	Technician	Report No.

DAILY FIELD REPORT

BLACK EAGLE CONSULTING, INC.
GEOTECHNICAL AND CONSTRUCTION SERVICES
1345 Capital Boulevard, Suite A
Reno, NV 89502-7140
Phone: (775) 359-6600
Fax: (775) 359-7766

Project: PSC Tank Replacements	Project Number: 0560-03-1	Date: 5-2-12
Client: PSC	Contact: Aubrey	Total Hrs.: 3.0
Location: Fernley	Weather: Clear	Temp:
Contractor: L & H Construction	Contact: Matt	Stand By Hrs.:

TYPE OF INSPECTION/TESTING		CONCRETE, MORTAR & GROUT TEST DATA					
☐ Site Inspection	☒ Const. Materials Sampling	Set No.	1				
☒ Construction Observations	☐ Batch Plant Inspection	Ticket No.	19051				
☐ Earthwork/Mass Grading	☐ Coring Asphalt/Concrete	Time a.m. p.m.	10:41				
☐ Footings/Foundations	☐ Bldg. Pad Certification	Truck No.	21				
☐ Utilities (Gas, Elect, Wtr)	☒ Reinforcing Steel Insp.	Amb. Temp °F	64*F				
☐ Aggregate Base	☐ Structural Welding/Bolting	Mix. Temp °F	76*F				
☐ Asphalt Paving	☐ Masonry Inspection	Slump, inches	4"				
☒ Portland Cement Concrete	☐ Fire Proofing Inspection	Air Content, %	N/A				
☐ Other	☐ Other	Other	Fiber Added Mix				

Equipment in use:

Observations/Comments: Performed a visual reinforcing steel inspection prior to concrete placement for TS-3 tank pad. A bonding agent was applied inside the forms and reinforcing steel mat was placed with #4 bars at 18" O.C. E.W. Reinforcing steel was tied at a min of 50% No problems noted. Observed the placement of 3D concrete place approx. 5 yards for TS-3 Tank Pad. Concrete was placed by wheelbarrow. Sampling and testing was performed ref break sheets for additional info. No problems noted.

AB – Agg Base BS – Bedding Sand B – Below BG – Below Grade FG – Finished Grade FTG – Footing SF – Structural Fill SG – Subgrade SOG – Slab-on Grade

Reviewed By 5-8-12 | Technician: Adam Hutchings | Report No.

COMPRESSIVE STRENGTH TEST REPORT

REPORT TO:	Philip Services Corporation	PROJECT NAME:	PSC Tank Replacement PO 12103-2
	2095 Newlands Drive	PROJECT NO.:	0560-03-1
	Fernley, NV 89408	DATE SAMPLED:	May 2, 2012
ATTENTION:	Mr. Aubry Burgess	SAMPLED BY:	Adam Hutchings
STRUCTURE:	Tank Pad TS-3		
LOCATION IN STRUCTURE:	Mid Pad		

FIELD DATA

MATERIAL SAMPLED:	Portland Cement Concrete	SET NO:	1
CONTRACTOR:	L & H Concrete	TIME CAST:	10:40 AM
SUPPLIER:	3D Concrete	TRUCK NO:	21
MIX I.D. NO.:	1126 RP	TICKET NO.:	19051
REQ. STRENGTH (28-DAY) psi:	4,500	MIX TEMPERATURE:	76 °F
ADMIXTURES:	1 Gallon Plasticizer	SLUMP:	4 in
CUBIC YARDS PLACED:	5	AIR CONTENT:	N/R %
FIELD NOTES:		AMBIENT TEMPERATURE:	64 °F
REMARKS			

LABORATORY DATA

SAMPLE I.D.	8878	8879	8880	8881	8882
DATE TESTED:	5/9/2012	5/30/2012	5/30/2012	5/30/2012	
AGE, DAYS:	7	28	28	28	Hold
DIMENSION [dia. X ht.] (in):	4 X 8	4 X 8	4 X 8	4 X 8	
AREA, SQUARE (in^2):	12.57	12.57	12.57	12.57	
ULTIMATE LOAD (lbs)	69,410				Not Tested
TYPE OF FRACTURE: *	B				
COMPRESSIVE STRENGTH (psi)	5,520				

DATE RECEIVED:	5/3/12	CAPPING METHOD:	Neoprene Caps	AVERAGE 28-DAY STRENGTH (psi):	#DIV/0!

DISTRIBUTION:

James Quinn - 3D Concrete (email)

Respectfully Submitted by:
Patrick A. Pilling, Ph.D., P.E., D.GE. - President

DRAFT

BLACK EAGLE CONSULTING, INC.
1345 Capital Boulevard, Suite A
Reno, Nevada 89502

*TYPES OF FRACTURES: A = CONE; B = CONE & SPLIT; C = CONE & SHEAR; D = SHEAR; E = COLUMNAR

TESTING AND SAMPLING WERE PERFORMED IN ACCORDANCE WITH ASTM C39, C78, C143, C172, C173, C231, AND C617 STANDARDS AS APPLICABLE

PSC FERNLEY FACILITY

EPOXY ANCHORS - SPECIAL INSPECTION CHECKLIST

TANK NO./EQUIPMENT NAME: T3

LOCATION: Fernley NV

INSPECTING FIRM & INSPECTOR: Black Eagle Consulting Dan McEwen

DATE: 5-1-12

ANCHORS SUBJECT TO PERIODIC INSPECTION

- Anchor Type — Simpson SET-XP (yes/no) Yes
- Anchor Material and Grade — #4 Rebar Grade 60
- Anchor Diameter — 1/2"
- Anchor Length — 9 1/2"
- Hole Location per Details — 15 locations shown 21 total Dowels installed
- Hole Diameter — 5/8"
- Hole Embedment Depth — 4"
- Hole Cleaning Procedure

	Yes/No
a. Remove dust with oil free compressed air (Min. 4 seconds)	Yes
b. Clean with Nylon Brush (minimum 4 cycles)	Yes
c. Remove dust with oil free compressed air (Min.4 seconds)	Yes

- Anchor Spacing per Details — 21 Dowels installed 7 lines w/ 3 ea. Line Eq spaces
- Edge Distance per Details — Yes
- Anchor Embedment — 4"
- Tightening Torque — N/A
- Adhesive Type — Simpson SET-XP (yes/no) Yes
- Expiration Date — 6-31-12
- Adhesive Installation Method per Simpson requirements (yes/no) Yes

SPECIAL INSPECTOR DAILY REPORT

Page___of___

BLACK EAGLE CONSULTING, INC.
GEOTECHNICAL AND CONSTRUCTION SERVICES
1345 Capital Blvd., Suite A, Reno, Nevada 89502-7140
Phone (775) 359-6600 Fax (775) 359-7766

Project: PSC Tank Replacement Ph1	Project No.: 560-03-1	Date: 5-1-12
Client: PSC	Contact: Aubrey Burgess	Total Hrs.: 2 1/2
Location: Fernley NV	Weather:	Temp.:
Contractor: L&H	Contact: Matt Long	Stand By Hrs.:

Equipment in use:

Describe Inspections Made, Including Locations: Epoxy inspection of (21) #4 x 9 1/2" rebar for tie in from existing SOG to New F3 pan. Simpson Set XP ICC ES ESR 2508 Exp 8-31-12 used as per manufacturer's recommendations. Minimum of 4" embedment obtained.

List Tests Made:

List Items Requiring Correction, Corrections of Previously Listed Items, and Previously Listed Uncorrected Items:

List Changes to Approved Plans Authorized by the Building Official and Architect or Engineer:

Comments: Plans called for (15) #4 contractor placed 21 @ their Disgretion

Signed: [signature] Date: 5-1-12

Print Full Name: Daniel W. McEwing I.D. Number: 0870922 88

Reviewed By: [signature] Date: 5-8-12

White to Client Canary to Office File Green to Field File

cc:

QA/QC SIDR # 4

PSC FERNLEY FACILITY

EPOXY ANCHORS - SPECIAL INSPECTION CHECKLIST

TANK NO./EQUIPMENT NAME: TS-3

LOCATION: Fernley, NV

INSPECTING FIRM & INSPECTOR: BLACK EAGLE CONSULTING / ADAM Hutchings

DATE: 5-11-12

ANCHORS SUBJECT TO CONTINUOUS INSPECTION

- Anchor Type — Simpson SET-XP (yes/no) Yes
- Anchor Material and Grade — ASTM D307 ALL-THREAD
- Anchor Diameter — 1/2"
- Anchor Length — 5"
- Hole Location per Details — Yes
- Hole Drilling Method - Rotary hammer with carbide-tipped drill bits (yes/no) Yes
- Hole Diameter — 5/8
- Hole Embedment Depth — 4"
- Hole Cleaning Procedure

	Yes/No
a. Remove dust with oil free compressed air (Min. 4 seconds)	Yes
b. Clean with Nylon Brush (minimum 4 cycles)	Yes
c. Remove dust with oil free compressed air (Min.4 seconds)	Yes

- Anchor Spacing per Details — Yes
- Edge Distance per Details — Yes
- Anchor Embedment — 4"
- Tightening Torque — Not done @ time of Epoxy
- Adhesive Type — Simpson SET-XP (yes/no) Yes
- Expiration Date — 01/14
- Adhesive Installation Method per Simpson requirements (yes/no) Yes

DAILY FIELD REPORT

BLACK EAGLE CONSULTING, INC.
GEOTECHNICAL AND CONSTRUCTION SERVICES
1345 Capital Boulevard, Suite A
Reno, NV 89502-7140
Phone: (775) 359-6600
Fax: (775) 359-7766

Project: PSC Tank Replacements	Project Number: 0560-03-1	Date: 5-11-12
Client: PSC	Contact: Aubrey	Total Hrs.: 2.5
Location: Fernley	Weather: Clear / Sunny	Temp:
Contractor: Bragg Crane Service	Contact: Vick	Stand By Hrs.:

TYPE OF INSPECTION/TESTING		CONCRETE, MORTAR & GROUT TEST DATA					
☐ Site Inspection	☐ Const. Materials Sampling	Set No.					
☐ Construction Observations	☐ Batch Plant Inspection	Mix No.					
☐ Earthwork/Mass Grading	☐ Coring Asphalt/Concrete	Time a.m. p.m.					
☐ Footings/Foundations	☐ Bldg. Pad Certification	Truck No.					
☐ Utilities (Gas, Elect, Wtr)	☐ Reinforcing Steel Insp.	Amb. Temp °F					
☐ Aggregate Base	☐ Structural Welding/Bolting	Mix. Temp °F					
☐ Asphalt Paving	☐ Masonry Inspection	Slump, inches					
☐ Portland Cement Concrete	☐ Fire Proofing Inspection	Air Content, %					
☒ Other	☒ Other	Other					

Equipment in use:

Observations/Comments: Arrived on-site to observed the continuous inspection of drilling 5/8" holes with a min depth of 4". ½" dia A307 all-thread bolts placed using Simpson Set XP Epoxy ESR# 2508 EXP Date 01/14. (24) total bolts placed, with a min of 4" embedment. Holes were brushed and blown clean using compressed air and a wire brush. No Problems noted during continuous inspection.

AB = Agg Base BS = Bedding Sand B = Below EG = Below Grade FG = Finished Grade FTG = Footing SF = Structural Fill SG = Subgrade SOG = Slab-on Grade

Reviewed By	Technician: Adam Hutchings	Report No.

TANK NO's T-1 THRU T-5, T-4 & T-5 PLANS AND DETAILS

PSC FERNLEY - TANK REPLACEMENT PROJECT

SHEET NO.

TS1.0

tobey wade
CONSULTING
129 First Street
Reno, Nevada 89501
Tel. (775) 324-7767 Fax (775) 324-1797

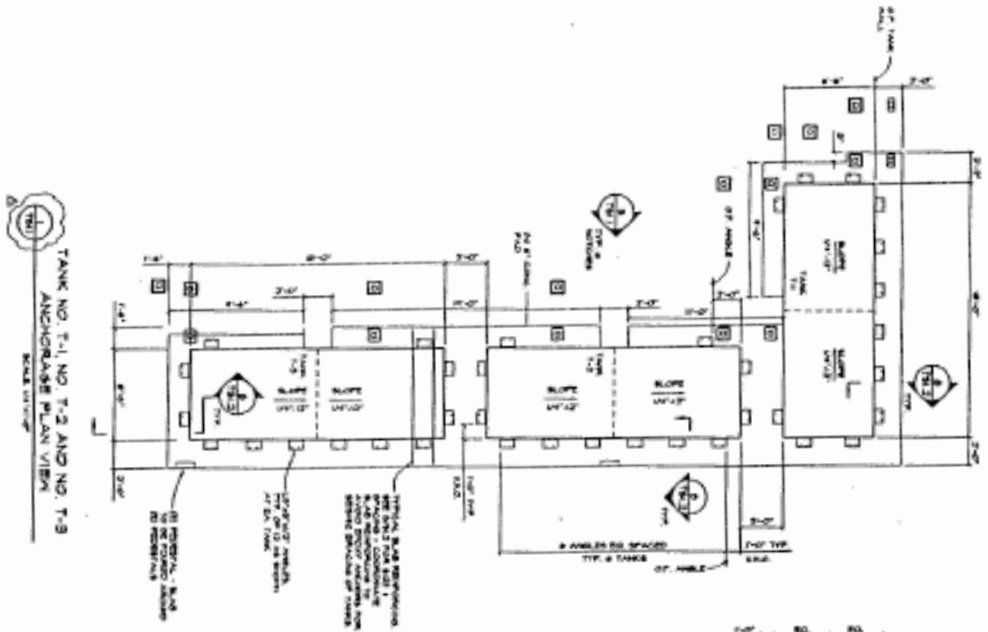

TANK NO. T-1, NO. T-2 AND NO. T-3
ANCHORAGE PLAN VIEW

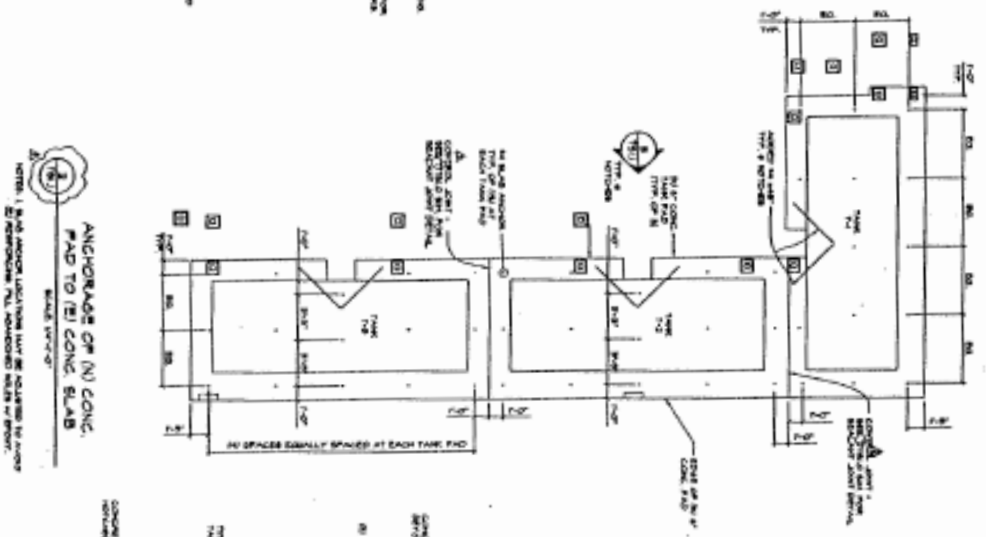

ANCHORAGE OF (N) CONC.
PAD TO (E) CONC. SLAB

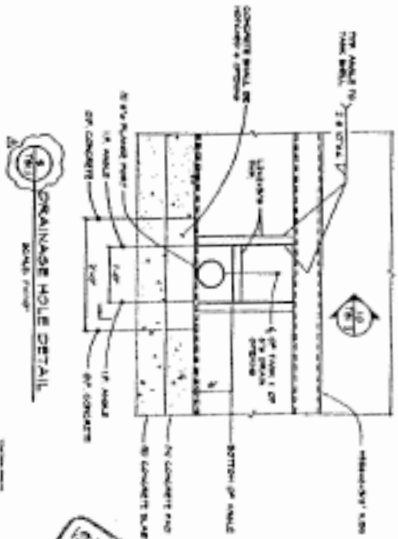

DRAINAGE HOLE DETAIL

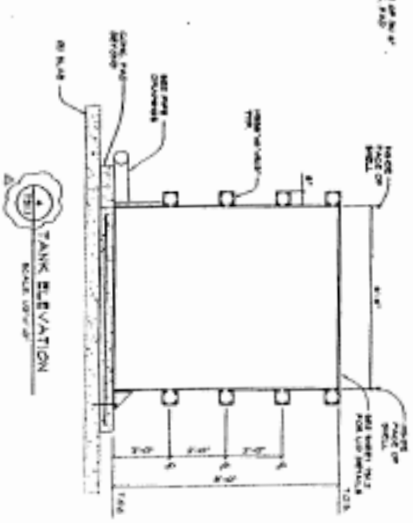

TANK ELEVATION

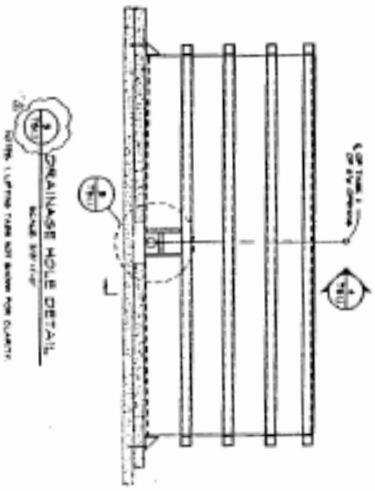

DRAINAGE HOLE DETAIL

ISSUED FOR PERMIT

TS1.1

TANK NO.'S T-1 THRU T-3 ANCHORAGE PLAN, T1 THRU T-3, T-6 & T-7 DETAILS

PSC FERNLEY - TANK REPLACEMENT PROJECT

PREPARED FOR
AUSENCO PSI

FERNLEY LYON COUNTY NEVADA

tobey wade
CONSULTING
329 Flint Street
Reno, Nevada 89501
tel. (775) 324-7757 Fax (775) 324-7797

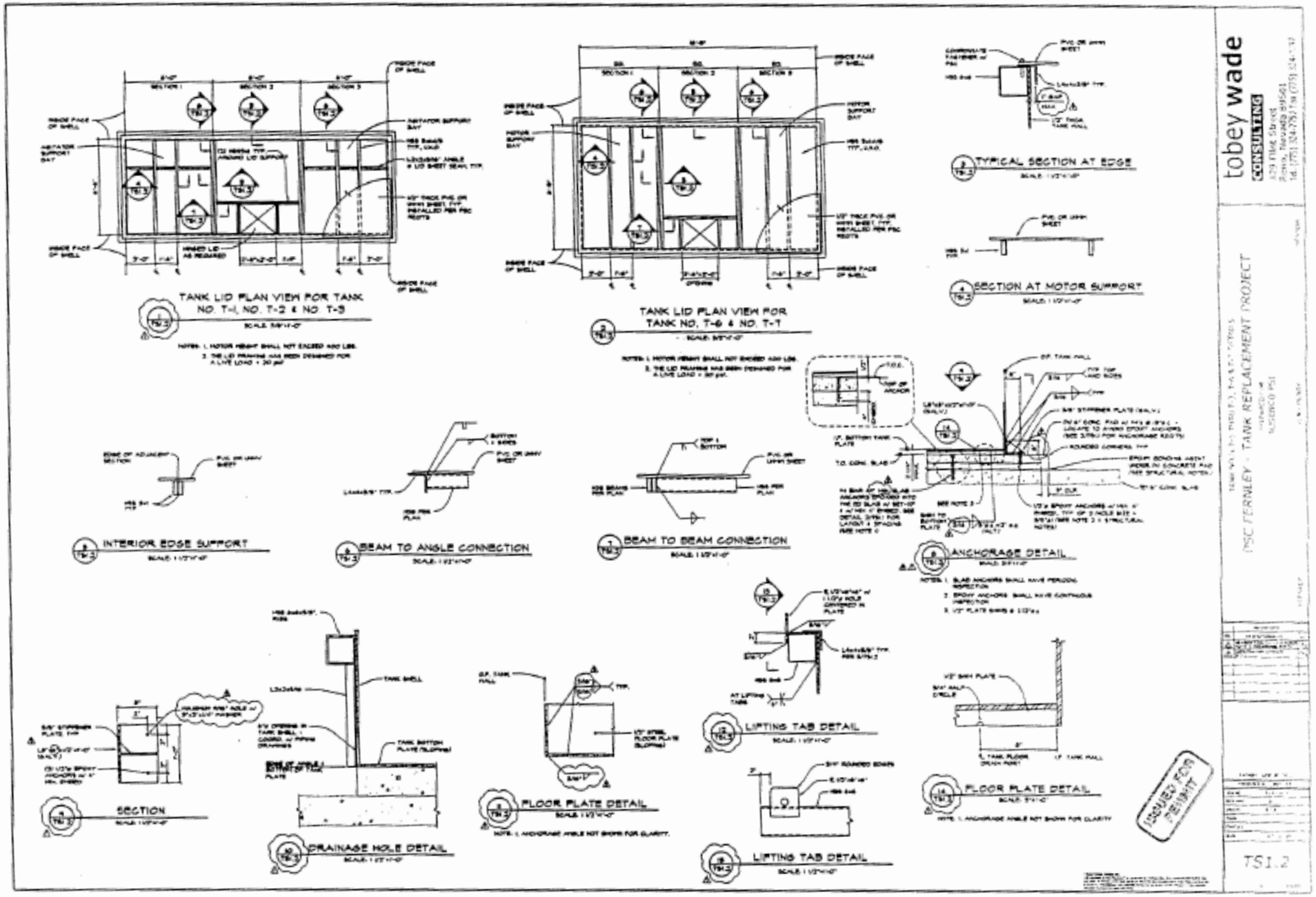
TANK LID PLAN VIEW FOR TANK NO. T-1, NO. T-2 & NO. T-3
TANK LID PLAN VIEW FOR TANK NO. T-6 & NO. T-7
TYPICAL SECTION AT EDGE
SECTION AT MOTOR SUPPORT
INTERIOR EDGE SUPPORT
BEAM TO ANGLE CONNECTION
BEAM TO BEAM CONNECTION
ANCHORAGE DETAIL
SECTION
DRAINAGE HOLE DETAIL
FLOOR PLATE DETAIL
LIFTING TAB DETAIL
LIFTING TAB DETAIL
FLOOR PLATE DETAIL
ISSUED FOR PERMIT
tobey wade
CONSULTING
PSC FERNLEY - TANK REPLACEMENT PROJECT
TS1.2

tobey wade
STRUCTURAL ENGINEERS

RECEIVED
SEP 24 2013
ENVIRONMENTAL PROTECTION

September 20, 2013
Project No. R405-13-13

Ms. Tracy Buono
Facility/Operations Manager
PSC FERNLEY FACILITY
2095 Newlands Drive East
Fernley, NV 89408

RE: TANK T-4 CERTIFICATION

Dear Ms. Buono:

In accordance with the Fernley Facility Amended Tank Replacement Plan dated December 17, 2012, and Appendix D-6 of the pending July 2012 RECRA Permit, each new tank is required to be certified by Independent Registered Professional Engineers (IRPE's) prior to being placed into service. This letter has been prepared to document the evaluation of Tank T-4 as performed by Tobey-Wade Consulting.

Background

Tank T-4 is a welded structural steel tank with a working capacity of 3,750 gallons. Frontenac Engineering designed the tank shell and conducted a structural evaluation to determine the foundation requirements under static and dynamic (seismic) loads. Frontenac Engineering also conducted a stability analysis and designed anchorage for the tank. A copy of their calculations is attached.

Certification of the tank liner's compatibility with the proposed waste stream has been provided by others.

Findings

Based on our evaluation, the following systems are hereby certified as being in compliance with the Amended Tank Replacement plan:

- Tank T-4 has sufficient strength to contain the proposed waste materials without rupturing based on the design analysis performed by Frontenac Engineering.

NEVADA OFFICE
648 LANDER STREET ■ RENO, NEVADA 89509 ■ TEL: (775) 324.7757 ■ FAX: (775) 324.7797

- Tank T-4 is situated on a reinforced concrete foundation system which is capable of adequately supporting the tank and its contents under static and dynamic conditions based on the design analysis performed by Frontenac Engineering.

- Tank T-4 is located in an area with sufficient secondary containment as required by 40 CFR Ch. I, 264.193.

- Tank T-4 is anchored to resist overturning when subjected to site-specific 2006 International Building Code level seismic events based on the design analysis performed by Frontenac Engineering.

- Tank T-4 is anchored to prevent sliding when subjected to site-specific 2006 International Building Code level seismic events based on the design analysis performed by Frontenac Engineering.

- Tank T-4 has been subjected to a 24-hour leak test and found to be watertight. The Tank Leakage Test results are included in the Tank Inspection Form, copy attached.

- The exterior of Tank T-4's shell wall has been inspected and found to be undamaged, other than for minor scrapes. The Tank Shell Inspection results are included in the Tank Inspection Form, copy attached.

- The process piping fill and discharge connections have been inspected and found to be undamaged and with no evidence of leakage. The piping connections are adequately attached to the tank to prevent displacement during an earthquake. The associated Process Piping inspection form is attached.

- Special Inspection of the new foundation slab and the tank anchor bolt installation was performed as required by the International Building Code. Copies of the Special Inspection reports are attached. The tank shell welding was inspected by Frontenac Engineering and found to meet code requirements. A copy of their inspection report is attached.

Tobey-Wade Consulting witnessed the tank leakage test and conducted the tank shell inspection, under my direct supervision. Special Inspections were performed by inspectors from Nortech Consultants based on anchorage requirements provided by Frontenac Engineering.

Certification Statement

I certify under penalty of law that this report and all attachments were prepared under my direction and supervision in accordance with a system developed to assure that qualified personnel properly gather and evaluate the information submitted. Based on my inquiry of the person or persons who manage the system or those persons directly responsible for gathering the information, the information, submitted is, to the best of my knowledge and belief, true, accurate, and complete. I am aware that there are significant penalties for submitting false information, including the possibility of fines and imprisonment for knowing violations.

This report has been prepared in accordance with accepted engineering practices and is subject to the assumptions and limitations stated in the report. Also note that this certification covers the aforementioned aspects of Tank T-4 only.

Please feel free to contact me at your convenience should you have any questions relating to our findings.

Sincerely,
TOBEY-WADE CONSULTING

Terrence R. Tobey

TERRENCE R. TOBEY, P.E., S.E.
Principal Structural Engineer

Exp.
6.30.14

TANK DATA SHEET

RCRA-Regulated? YES
Tank Location: DETOX ROOM
Tank Name: TREATMENT TANK
Tank Numbers: T - 4, T - 5
Process Description: NEUTRALIZATION, OXIDIZER, CYANIDE/SULFIDE TREATMENT
Vessel Fluid: AQUEOUS-BASED WASTE LIQUIDS
Specific Gravity: ≤ 1.25 Freeboard At Working Vol (ft^3): 1' – 0"
Normal Operating Pressure (psig): ATMOSPHERIC Temperature (°F): AMBIENT

	Material	Thickness	Type
Bottom	CARBON STEEL PLATE	5/16" NOMINAL	FLAT
Shell	CARBON STEEL PLATE	5/16" NOMINAL	CYLINDRICAL – VERTICAL
Roof	CARBON STEEL PLATE	¼" NOMINAL	SELF-SUPPORTING CONE

Working Volume (USG): 3,750 GALLONS Insulation: NONE
Nominal Volume (USG): 4,175 GALLONS Method of Construction: WELDED STEEL
Tank I.D. (ft): 8' – 6" Tank Height or Length (ft): 9' – 10"
Design Code Used: API 650, 10TH EDITION Date in Service: PLANNED Tanks
Anchorage: BOLTED TO CONCRETE. Anchorage designs per 2006 IBC.

Connections

Item No.	Size (In.)	Gasket	Description
1	24"		SIDE MANWAY
2	4"		SIDE FLANGE NOZZLE (2)
3	24"		ROOF MANWAY
4	8"		MIXER FLANGE NOZZLE
5	8"		VENT FLANGE NOZZLE
6	4"		FLANGE NOZZLE
7	3"		FLANGE NOZZLE
8	2"		FLANGE NOZZLE
9	1 ¼"		FLANGE NOZZLE (6)
10			BAFFLES (4)
11			
12			
13			
14			
15			

Tank Sketch

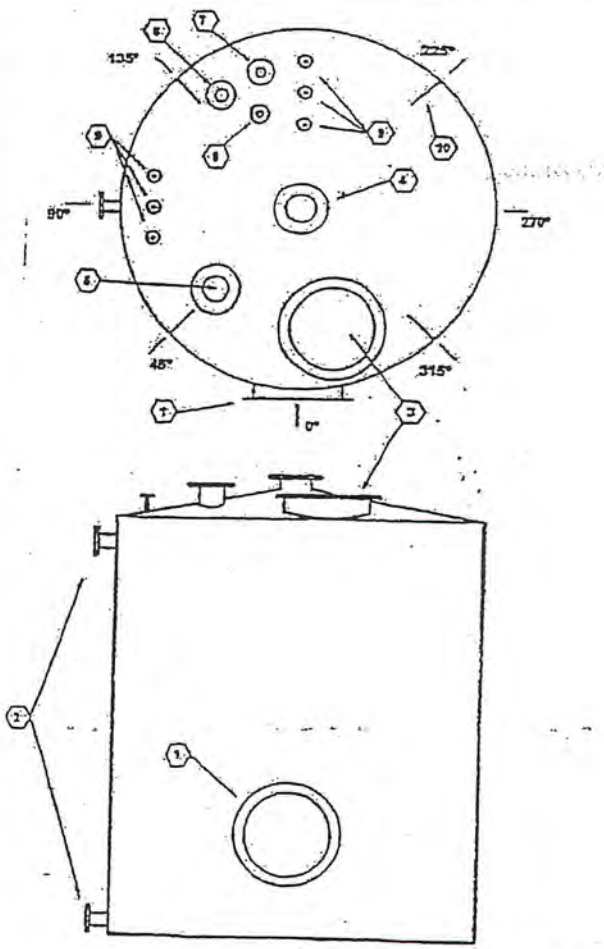

Interior Coating: To be Determined.
Exterior Coating: BASECOAT EPOXY, TOPCOAT POLYURETHANE ENAMEL.
Tank Mfger: to be determined.

Remarks: Planned tanks for replacement of existing tanks T-4 and T-5.

ADDITION DATE 10/09/09

REVISION NUMBER 1

tobey wade
STRUCTURAL ENGINEERS

RECEIVED
JUL 17 2013
ENVIRONMENTAL PROTECTION

June 27, 2013
Project No. R405-08-13

Ms. Tracy Buono
Facility/Operations Manager
PSC FERNLEY FACILITY
2095 Newlands Drive East
Fernley, NV 89408

RE: TANK T-4 INTERIM CERTIFICATION

Dear Ms. Buono:

In accordance with the Fernley Facility Amended Tank Replacement Plan dated December 17, 2012, and Appendix D-6 of the pending July 2012 RECRA Permit, each new tank is required to be certified by Independent Registered Professional Engineers (IRPE's) prior to being placed into service. This letter has been prepared to document the evaluation of Tank T-4 as performed by Tobey-Wade Consulting.

It should be noted that Tank T-4 currently has permanent bulkhead fittings with valves for connection of temporary fill and discharge lines. The permanent process piping servicing Tank T-4 will be installed in Phase 3 as outlined in the above-referenced documents. Accordingly, this certification is being provided as an interim certification. Final certification of Tank T-4 will be provided after the permanent piping and all other associated permanent systems have been installed and inspected.

Background

Tank T-4 is a welded structural steel tank with a working capacity of 3,750 gallons. Frontenac Engineering designed the tank shell and conducted a structural evaluation to determine the foundation requirements under static and dynamic (seismic) loads. Frontenac Engineering also conducted a stability analysis and designed anchorage for the tank. A copy of their calculations is attached.

Certification of the tank liner's compatibility with the proposed waste stream has been provided by others.

NEVADA OFFICE
648 LANDER STREET ■ RENO, NEVADA 89509 ■ TEL: (775) 324.7757 ■ FAX: (775) 324.7797

PDF processed with CutePDF evaluation edition www.CutePDF.com

Findings

Based on our evaluation, the following systems are hereby certified as being in compliance with the Amended Tank Replacement plan:

- Tank T-4 has sufficient strength to contain the proposed waste materials without rupturing based on the design analysis performed by Frontenac Engineering.
- Tank T-4 will be situated on a reinforced concrete foundation system which is capable of adequately supporting the tank and its contents under static and dynamic conditions based on the design analysis performed by Frontenac Engineering.
- Tank T-4 will be located in an area with sufficient secondary containment as required by 40 CFR Ch. I, 264.193.
- Tank T-4 is anchored to resist overturning when subjected to site-specific 2006 International Building Code level seismic events based on the design analysis performed by Frontenac Engineering.
- Tank T-4 is anchored to prevent sliding when subjected to site-specific 2006 International Building Code level seismic events based on the design analysis performed by Frontenac Engineering.
- Tank T-4 has been subjected to a 24-hour leak test and found to be watertight. The Tank Leakage Test results are included in the Tank Inspection Form, copy attached.
- The exterior of Tank T-4's shell wall has been inspected and found to be undamaged, other than for minor scrapes. The Tank Shell Inspection results are included in the Tank Inspection Form, copy attached.
- The process piping fill and discharge connections have been inspected and found to be undamaged and with no evidence of leakage. The piping connections are adequately attached to the tank to prevent displacement during an earthquake. The associated Process Piping inspection form is attached.
- Special Inspection of the new foundation slab and the tank anchor bolt installation was performed as required by the International Building Code. Copies of the Special Inspection reports are attached. The tank shell welding was inspected by Frontenac Engineering and found to meet code requirements. A copy of their inspection report is attached.

Tobey-Wade Consulting witnessed the tank leakage test and conducted the tank shell inspection, under my direct supervision. Special Inspections were performed by inspectors from Nortech Consultants based on anchorage requirements provided by Frontenac Engineering.

Certification Statement

I certify under penalty of law that this report and all attachments were prepared under my direction and supervision in accordance with a system developed to assure that qualified personnel properly gather and evaluate the information submitted. Based on my inquiry of the person or persons who manage the system or those persons directly responsible for gathering the information, the information, submitted is, to the best of my knowledge and belief, true, accurate, and complete. I am aware that there are significant penalties for submitting false information, including the possibility of fines and imprisonment for knowing violations.

This report has been prepared in accordance with accepted engineering practices and is subject to the assumptions and limitations stated in the report. Also note that this certification covers the aforementioned aspects of Tank T-4 only.

Please feel free to contact me at your convenience should you have any questions relating to our findings.

Sincerely,
TOBEY-WADE CONSULTING

Terrence L. Tobey

TERRENCE R. TOBEY, P.E., S.E.
Principal Structural Engineer

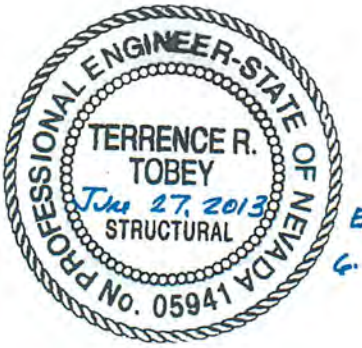

ESTABLISHED 1980
PRESIDENTS
1980 - 1991 HRINSIN, JOHN A.
1992 - BERTHOLD, WILLIAM K.

FRONTENAC ENGINEERING
CIVIL/STRUCTURAL/
LAND SURVEYING

June 27, 2013

Mr. Jim Dailey
Equipment Pro Inc.
721 Parkwood Drive
St. Genevieve, MO
573.883.2373

RE: Phase III Tank T-4 – Tank Inspection Certification
FEG Job No. 13255

Dear Jim,

Pursuant to your request, Frontenac Engineering Group, Inc. has conducted a visual inspection of the T-4 tank which is to be utilized at PSC Environmental Services, LLC, in Fernley, Nevada. The inspection was conducted per Section 8.5 of the API 650. The purpose of our inspection was to determine if the tank was constructed per the construction documents provided by Frontenac Engineering Group, Inc., which were developed per the eleventh edition of the API 650.

From our inspection of the tank, we have determined that the tank was constructed per the construction documents and, therefore, is in compliance with API 650 design. Also, we found that the condition of the welds were in compliance with the undercut, surface porosity, and reinforcement parameters of API 650, Section 8.5.

Please feel free to contact me with any questions or comments.

Thank you,

Joshua J. Schmitz
Joshua J. Schmitz, P.E.
Structural Engineer

PROFESSIONAL ENGINEER-STATE OF NEVADA
WILLIAM K. BERTHOLD
Exp. 12/31/13
CIVIL
No. 22305
6/27/13

CIVIL / STRUCTURAL / LAND SURVEYING

PSC Environmental Services, LLC
Fernley, Lyon County, Nevada

Structural Calculations
For
T-4 Tank and Foundation

Design Code: 2006 IBC

Prepared for:

Mr. Jim Dailey
Equipment Pro Incorporated
721 Parkwood Drive
Ste. Genevieve, MO 63670

June 26, 2013

FEG Project Number: 121039

Seismic Design of Tank and Anchors Per API 650

Date: June 26, 2013 Calc By: JJS

Job No. 121039 Check By: WKB

Description: Seismic Design of T-4 Tank and Anchors

Site Information

Seismic Use Group:	II
Importance Factor:	1.25
S_s	1.335
S_1	0.531
F_a	1.000
F_v	1.300
S_{MS}	1.335
S_{M1}	0.690
S_{DS}	0.890
S_{D1}	0.460
T_L	12
g	32.4

Tank Information

S.G.	1.25	
ρ	78	
D	8.5	
H	9.75	
D/H	0.871795	
W_f	800	Weight of Tank Bottom
W_p	39000	Weight of Tank Contents
W_r	1000	Weight of Tank Roof (includes framing, knuckles, etc.)
W_s	3500	Weight of Tank Shell (includes appurtenances)
W_T	44300	Total Weight of Tank (Wf + Wr + Ws + Wp)
E_s	29000000	
n_A	9	Number of Equally Spaced Anchors
t	0.3125	Thickness of shell ring under consideration
t_b	0.3125	Thickness of tank bottom minus corrosiion allowance
t_s	0.3125	Thickness of bottom shell course minus corrosion allowance
t_u	0.3125	Equivalent uniform thickness of tank shell
μ	0.4	Coefficient of friction between tank base and foundation
F_y	36000	

Impulsive Natural Period

H/D	1.15	
C_i	6.45	From Figure E-1
T_i	0.019	sec

Convective (Sloshing) Period

K_s	0.578	
T_c	1.686	sec

Impulsive spectral Acceleration Parameter, Ai:

R_{wi}	4	(3.5 for Self-Anchored, 4 for Mechanically Anchored)
A_i	0.278	

Convective Spectral Acceleration Parameter, Ac:

R_{wc}	2	
A_c	0.256	

Design Loads

W_i	31588	lb
W_c	7816.551	lb
V_i	10259	lb
V_c	2001	lb
V	10453	lb (SRSS)

Center of Action for Ringwall Overturning Moment

X_i	4.08	ft
X_c	7.50	ft

Center of Action for Slab Overturning Moment

X_{is}	5.385	ft

X_{cs}	7.57 ft	

Vertical Seismic Effects

F_v	5520 lb	

Dynamic Liquid Hoop Forces

N_i	41.4 psi	D/H>=1.33
N_i	34.9 psi	D/H<1.33
N_c	22.7 psi	
N_h	241.7 psi	
σ_{T1}	952.6 psi	D/H>=1.33
σ_{T2}	594.4 psi	
σ_{T1}	937.9 psi	D/H<1.33
σ_{T2}	376.5 psi	

Overturning Moment

M_{rw}	45222 ft-lb	
M_s	56820 ft-lb	

Overturning Resisting Force of Annulus

w_a	132.6 psi	

Anchorage Ratio

w_{rs}	37.4 lb/ft	
w_t	168.5 lb/ft	
J	2.98	Anchor Bolts are Required

Anchor Bolt Requirements

w_{AB}	843.4 lb/ft	
$(P_{AB})_U$	2502.3 lb	Ultimate Design Tension Force per Achor

Maximum Longitudinal Shell-Membrane Compression Stress (Mechanically Anchored Tanks)

σ_c	259.7 psi	

Allowable Longitudinal Shell-Membrane Compresion Stress

F_c	16800.52 psi	OK

Check Overturning Stability

M_{resist}	184025 ft-lb	
$(M_s)_U$	56820 ft-lb	
F.S.	3.24	Must be greater than 2.0.
$(M_s)_{max}$	39774.28	[0.7 x $(M_s)_U$] Service Moment for Use in Foundation Design

Sliding Resistance

V_s	16837 lb	
V	10453 lb	
F.S.	1.61	Must be greater than 1.0

Check Local Shear Transfer

V_{max}	783 lb	
V_{allow}	12934 lb	
F.S.	16.5	Must be greater than 1.0

Frontenac Engineering Group
2725 Sutton Boulevard
Saint Louis, Missouri 63143
314-644-2200 Fax 314-644-0645

JOB 13255 T-4 TANK
SHEET NO. _____ OF _____
CALCULATED BY JJS DATE 6/26/13
CHECKED BY _____ DATE _____
SCALE _____

CHECK SEISMIC HOOP STRESSES ON SHELL

FROM PREVIOUS CALCULATIONS:

$A_i = 0.278$
$A_c = 0.256$
$A_v = 0.2S_{DS} = 0.18$
$N_i = 34.9\ psi$
$N_c = 220.7\ psi$
$N_h = 241.7\ psi$
$t = 5/16 = 0.3125''$

$$\sigma_t = \sigma_m \pm \sigma_s = \frac{N_h \pm \sqrt{N_i^2 + N_c^2 + (A_v N_h)^2}}{t}$$

$$= \frac{241.7 \pm 60.2}{0.3125}$$

$\sigma_t = 966\ psi$

$\sigma_t = 580\ psi$

ALLOWABLE HOOP STRESS = $S_d = \underset{\text{GOVERNS}}{23{,}200} \leq 0.9F_y = 32{,}400$

SINCE $\sigma_t = 966\ psi < 23{,}200$, THICKESS IS ADEQUATE

Company:	FRONTENAC ENGINEERING GROUP, INC.	Page:	1
Specifier:	JJS	Project:	PSC FERNLEY,
Address:	2725 SUTTON BLVD	Sub-Project I Pos. No.:	T-5/T-4 ANCHORS
Phone I Fax:	314.644.2200 |	Date:	6/26/2013
E-Mail:	joshs@fe-stl.com		

Specifier's comments:

1 Input data

Anchor type and diameter:	**HIT-RE 500-SD + HAS B7 7/8**
Effective embedment depth:	$h_{ef,act}$ = 9.000 in. ($h_{ef,limit}$ = - in.)
Material:	ASTM A 193 Grade B7
Evaluation Service Report:	ESR-2322
Issued I Valid:	3/1/2013 | 4/1/2014
Proof:	design method ACI 318 / AC308
Stand-off installation:	e_b = 0.000 in. (no stand-off); t = 0.313 in.
Anchor plate:	l_x x l_y x t = 4.000 in. x 4.000 in. x 0.313 in.; (Recommended plate thickness: not calculated)
Profile:	no profile
Base material:	cracked concrete, 4000, f_c' = 4000 psi; h = 12.000 in., Temp. short/long: 32/32 °F
Installation:	hammer drilled hole, installation condition: dry
Reinforcement:	tension: condition B, shear: condition B; no supplemental splitting reinforcement present edge reinforcement: none or < No. 4 bar
Seismic loads (cat. C, D, E, or F)	yes (D.3.3.6)

Geometry [in.] & Loading [lb, in.lb]

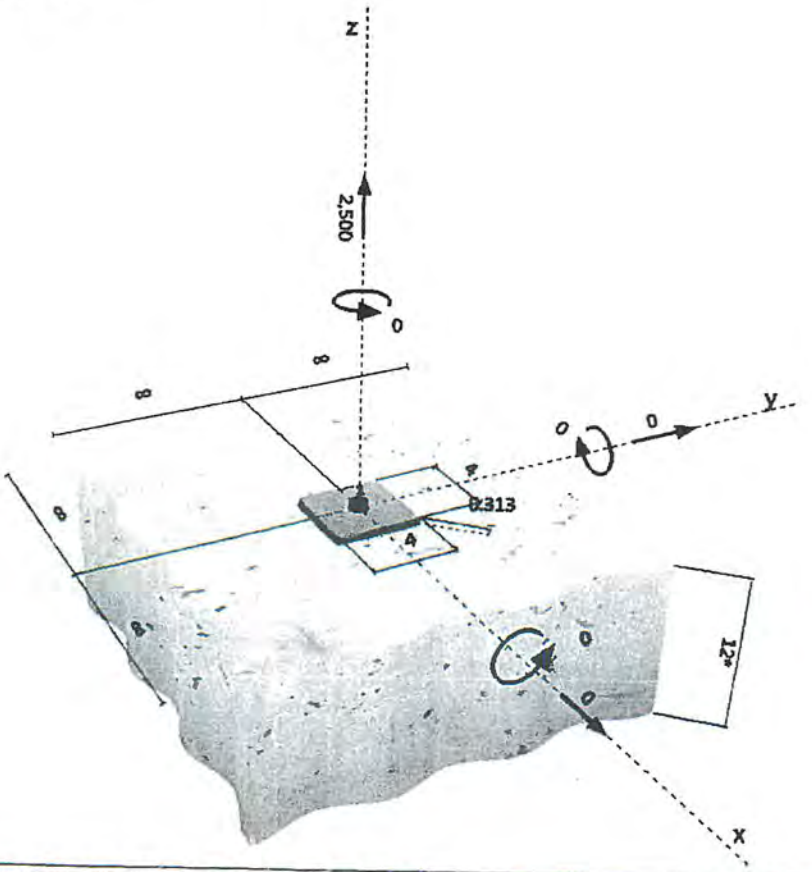

PROFIS Anchor (c) 2003-2009 Hilti AG, FL-9494 Schaan Hilti is a registered Trademark of Hilti AG, Schaan

Company: FRONTENAC ENGINEERING GROUP, INC.
Specifier: JJS
Address: 2725 SUTTON BLVD
Phone I Fax: 314.644.2200 |
E-Mail: joshs@fe-stl.com

Page: 2
Project: PSC FERNLEY,
Sub-Project I Pos. No.: T-5/T-4 ANCHORS
Date: 6/26/2013

2 Load case/Resulting anchor forces

Load case: Design loads

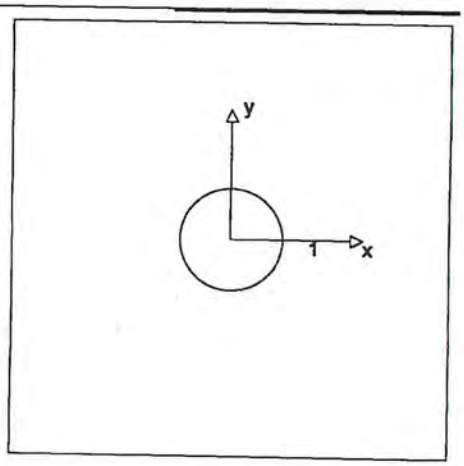

Anchor reactions [lb]
Tension force: (+Tension, -Compression)

Anchor	Tension force	Shear force	Shear force x	Shear force y
1	2500	0	0	0

max. concrete compressive strain: - [‰]
max. concrete compressive stress: - [psi]
resulting tension force in (x/y)=(0.000/0.000): 2500 [lb]
resulting compression force in (x/y)=(0.000/0.000): 0 [lb]

3 Tension load

	Load N_{ua} [lb]	Capacity ϕN_n [lb]	Utilization $\beta_N = N_{ua}/\phi N_n$	Status
Steel Strength*	2500	43282	6	OK
Bond Strength**	2500	2441	103	not recommended
Concrete Breakout Strength**	2500	5661	45	OK

* anchor having the highest loading **anchor group (anchors in tension)

3.1 Steel Strength

N_{sa} = ESR value refer to ICC-ES ESR-2322
$\phi N_{steel} \geq N_{ua}$ ACI 318-08 Eq. (D-1)

Variables

n	$A_{se,N}$ [in.^{2}]	f_{uta} [psi]
1	0.46	125000

Calculations

N_{sa} [lb]
57710

Results

N_{sa} [lb]	ϕ_{steel}	ϕN_{sa} [lb]	N_{ua} [lb]
57710	0.750	43282	2500

Input data and results must be checked for agreement with the existing conditions and for plausibility!
PROFIS Anchor (c) 2003-2009 Hilti AG, FL-9494 Schaan Hilti is a registered Trademark of Hilti AG, Schaan

Company: FRONTENAC ENGINEERING GROUP, INC.
Specifier: JJS
Address: 2725 SUTTON BLVD
Phone I Fax: 314.644.2200 |
E-Mail: joshs@fe-stl.com

3.2 Bond Strength

$N_a = \left(\frac{A_{Na}}{A_{Na0}}\right) \psi_{ed,Na}\, \psi_{p,Na}\, N_{a0}$ — ICC-ES AC308 Eq. (D-16a)

$\phi N_a \geq N_{ua}$ — ACI 318-08 Eq. (D-1)

A_{Na} = see ICC-ES AC308, Part D.5.3.7

$A_{Na0} = s_{cr,Na}^2$ — ICC-ES AC308 Eq. (D-16c)

$s_{cr,Na} = 20d \sqrt{\frac{\tau_{k,uncr}}{1450}} \leq 3\, h_{ef}$ — ICC-ES AC308 Eq. (D-16d)

$c_{cr,Na} = \frac{s_{cr,Na}}{2}$ — ICC-ES AC308 Eq. (D-16e)

$\psi_{ed,Na} = 0.7 + 0.3 \left(\frac{c_{a,min}}{c_{cr,Na}}\right) \leq 1.0$ — ICC-ES AC308 Eq. (D-16m)

$\psi_{g,Na} = \psi_{g,Na0} + \left[\left(\frac{s_{avg}}{s_{cr,Na}}\right)^{0.5} \cdot (1 - \psi_{g,Na0})\right] \geq 1.0$ — ICC-ES AC308 Eq. (D-16g)

$\psi_{g,Na0} = \sqrt{n} - \left[(\sqrt{n} - 1) \cdot \left(\frac{\tau_{k,c}}{\tau_{k,max,c}}\right)^{1.5}\right] \geq 1.0$ — ICC-ES AC308 Eq. (D-16h)

$\tau_{k,max,c} = \frac{k_c}{\pi \cdot d} \sqrt{h_{ef} \cdot f_c'}$ — ICC-ES AC308 Eq. (D-16l)

$\psi_{ec,Na} = \left(\frac{1}{1 + \frac{2e_N'}{s_{cr,Na}}}\right) \leq 1.0$ — ICC-ES AC308 Eq. (D-16j)

$\psi_{p,Na} = MAX\left(\frac{c_{a,min}}{c_{ac}}, \frac{c_{cr,Na}}{c_{ac}}\right) \leq 1.0$ — ICC-ES AC308 Eq. (D-16p)

$N_{a0} = \tau_{k,c} \cdot \alpha_{N,seis} \cdot k_{bond} \cdot \pi \cdot d \cdot h_{ef}$ — ICC-ES AC308 Eq. (D-16f)

Variables

$\tau_{k,c,uncr}$ [psi]	d_{anchor} [in.]	h_{ef} [in.]	$c_{a,min}$ [in.]	s_{avg} [in.]	n	$\tau_{k,c}$ [psi]
2000	0.875	9.000	∞	0.030	1	920

k_c	f_c' [psi]	$e_{c1,N}$ [in.]	$e_{c2,N}$ [in.]	c_{ac} [in.]	k_{bond}	$\alpha_{N,seis}$
17	4000	0.000	0.000	22.487	1.00	0.650

Calculations

$s_{cr,Na}$ [in.]	$c_{cr,Na}$ [in.]	A_{Na} [in.^{2}]	A_{Na0} [in.^{2}]	$\psi_{ed,Na}$	$\tau_{k,max}$ [psi]
20.553	10.276	422.41	422.41	1.000	1173

$\psi_{g,Na0}$	$\psi_{g,Na}$	$\psi_{ec1,Na}$	$\psi_{ec2,Na}$	$\psi_{p,Na}$	N_{a0} [lb]
1.000	1.000	1.000	1.000	1.000	14795

Results

N_a [lb]	ϕ_{bond}	$\phi_{seismic}$	$\phi_{nonductile}$	ϕN_a [lb]	N_{ua} [lb]
14795	0.550	0.750	0.400	2441	2500

2500/2441 ≈ 1,024 < 1,05
ok

Input data and results must be checked for agreement with the existing conditions and for plausibility!
PROFIS Anchor (c) 2003-2009 Hilti AG, FL-9494 Schaan Hilti is a registered Trademark of Hilti AG, Schaan

Company: FRONTENAC ENGINEERING GROUP, INC.
Specifier: JJS
Address: 2725 SUTTON BLVD
Phone I Fax: 314.644.2200 |
E-Mail: joshs@fe-stl.com

3.3 Concrete Breakout Strength

$N_{cb} = \left(\frac{A_{Nc}}{A_{Nc0}}\right) \psi_{ed,N}\, \psi_{c,N}\, \psi_{cp,N}\, N_b$ — ACI 318-08 Eq. (D-4)

$\phi\, N_{cb} \geq N_{ua}$ — ACI 318-08 Eq. (D-1)

A_{Nc} see ACI 318-08, Part D.5.2.1, Fig. RD.5.2.1(b)

$A_{Nc0} = 9\, h_{ef}^2$ — ACI 318-08 Eq. (D-6)

$\psi_{ec,N} = \left(\frac{1}{1 + \frac{2\, e'_N}{3\, h_{ef}}}\right) \leq 1.0$ — ACI 318-08 Eq. (D-9)

$\psi_{ed,N} = 0.7 + 0.3 \left(\frac{c_{a,min}}{1.5 h_{ef}}\right) \leq 1.0$ — ACI 318-08 Eq. (D-11)

$\psi_{cp,N} = \text{MAX}\left(\frac{c_{a,min}}{c_{ac}}, \frac{1.5 h_{ef}}{c_{ac}}\right) \leq 1.0$ — ACI 318-08 Eq. (D-13)

$N_b = k_c\, \lambda\, \sqrt{f'_c}\, h_{ef}^{1.5}$ — ACI 318-08 Eq. (D-7)

Variables

h_{ef} [in.]	$e_{c1,N}$ [in.]	$e_{c2,N}$ [in.]	$c_{a,min}$ [in.]	$\psi_{c,N}$
9.000	0.000	0.000	∞	1.000

c_{ac} [in.]	k_c	λ	f'_c [psi]
22.487	17	1	4000

Calculations

A_{Nc} [in.^{2}]	A_{Nc0} [in.^{2}]	$\psi_{ec1,N}$	$\psi_{ec2,N}$	$\psi_{ed,N}$	$\psi_{cp,N}$	N_b [lb]
729.00	729.00	1.000	1.000	1.000	1.000	29030

Results

N_{cb} [lb]	$\phi_{concrete}$	$\phi_{seismic}$	$\phi_{nonductile}$	$\phi\, N_{cb}$ [lb]	N_{ua} [lb]
29030	0.650	0.750	0.400	5661	2500

Input data and results must be checked for agreement with the existing conditions and for plausibility!
PROFIS Anchor (c) 2003-2009 Hilti AG, FL-9494 Schaan Hilti is a registered Trademark of Hilti AG, Schaan

Company: FRONTENAC ENGINEERING GROUP, INC.
Specifier: JJS
Address: 2725 SUTTON BLVD
Phone I Fax: 314.644.2200 |
E-Mail: joshs@fe-stl.com

4 Shear load

	Load V_{ua} [lb]	Capacity ϕV_n [lb]	Utilization $\beta_V = V_{ua}/\phi V_n$	Status
Steel Strength*	N/A	N/A	N/A	N/A
Steel failure (with lever arm)*	N/A	N/A	N/A	N/A
Pryout Strength (Bond Strength controls)*	N/A	N/A	N/A	N/A
Concrete edge failure in direction **	N/A	N/A	N/A	N/A

* anchor having the highest loading **anchor group (relevant anchors)

5 Warnings

- To avoid failure of the anchor plate the required thickness can be calculated in PROFIS Anchor. Load re-distributions on the anchors due to elastic deformations of the anchor plate are not considered. The anchor plate is assumed to be sufficiently stiff, in order not to be deformed when subjected to the loading!
- Condition A applies when supplementary reinforcement is used. The Φ factor is increased for non-steel Design Strengths except Pullout Strength and Pryout strength. Condition B applies when supplementary reinforcement is not used and for Pullout Strength and Pryout Strength. Refer to your local standard.
- Design Strengths of adhesive anchor systems are influenced by the cleaning method. Refer to the INSTRUCTIONS FOR USE given in the Evaluation Service Report for cleaning and installation instructions
- The present version of the software does not account for adhesive anchor special design provisions corresponding to overhead applications. Refer to the ICC-ES Evaluation Service Report (e.g. section 4.1.1 of the ICC-ESR 2322) for details.
- Checking the transfer of loads into the base material and the shear resistance are required in accordance with ACI318 or the relevant standard!
- An anchor design approach for structures assigned to Seismic Design Category C, D, E or F is given in ACI 318-08 Appendix D, Part D.3.3.4 that requires the governing design strength of an anchor or group of anchors be limited by ductile steel failure. If this is NOT the case, Part D.3.3.5 requires that the attachment that the anchor is connecting to the structure shall be designed so that the attachment will undergo ductile yielding at a load level corresponding to anchor forces no greater than the controlling design strength. In lieu of D.3.3.4 and D.3.3.5, the minimum design strength of the anchors shall be multiplied by a reduction factor per D.3.3.6.
  An alternative anchor design approach to ACI 318-08, Part D.3.3 is given in IBC 2009, Section 1908.1.9. This approach contains "Exceptions" that may be applied in lieu of D.3.3 for applications involving "non-structural components" as defined in ASCE 7, Section 13.4.2.
  An alternative anchor design approach to ACI 318-08, Part D.3.3 is given in IBC 2009, Section 1908.1.9. This approach contains "Exceptions" that may be applied in lieu of D.3.3 for applications involving "wall out-of-plane forces" as defined in ASCE 7, Equation 12.11-1 or Equation 12.14-10.
- It is the responsibility of the user when inputting values for brittle reduction factors ($\phi_{nonductile}$) different than those noted in ACI 318-08, Part D.3.3.6 to determine if they are consistent with the design provisions of ACI 318-08, ASCE 7 and the governing building code.
  Selection of $\phi_{nonductile}$ = 1.0 as a means of satisfying ACI 318-08, Part D.3.3.5 assumes the user has designed the attachment that the anchor is connecting to undergo ductile yielding at a force level <= the design strengths calculated per ACI 318-08, Part D.3.3.3.

Fastening does not meet the design criteria! → SEE PAGE 3

DESIGN IS OK

PROFIS Anchor (c) 2003-2009 Hilti AG, FL-9494 Schaan Hilti is a registered Trademark of Hilti AG, Schaan

Company: FRONTENAC ENGINEERING GROUP, INC.
Specifier: JJS
Address: 2725 SUTTON BLVD
Phone I Fax: 314.644.2200 |
E-Mail: joshs@fe-stl.com

6 Installation data

Anchor plate, steel: -
Profile: no profile; 0.000 x 0.000 x 0.000 in.
Hole diameter in the fixture: d_f = 0.938 in.
Plate thickness (input): 0.313 in.
Recommended plate thickness: not calculated
Cleaning: Premium cleaning of the drilled hole is required

Anchor type and diameter: HIT-RE 500-SD + HAS B7, 7/8
Installation torque: 1500.000 in.lb
Hole diameter in the base material: 1.000 in.
Hole depth in the base material: 9.000 in.
Minimum thickness of the base material: 11.000 in.

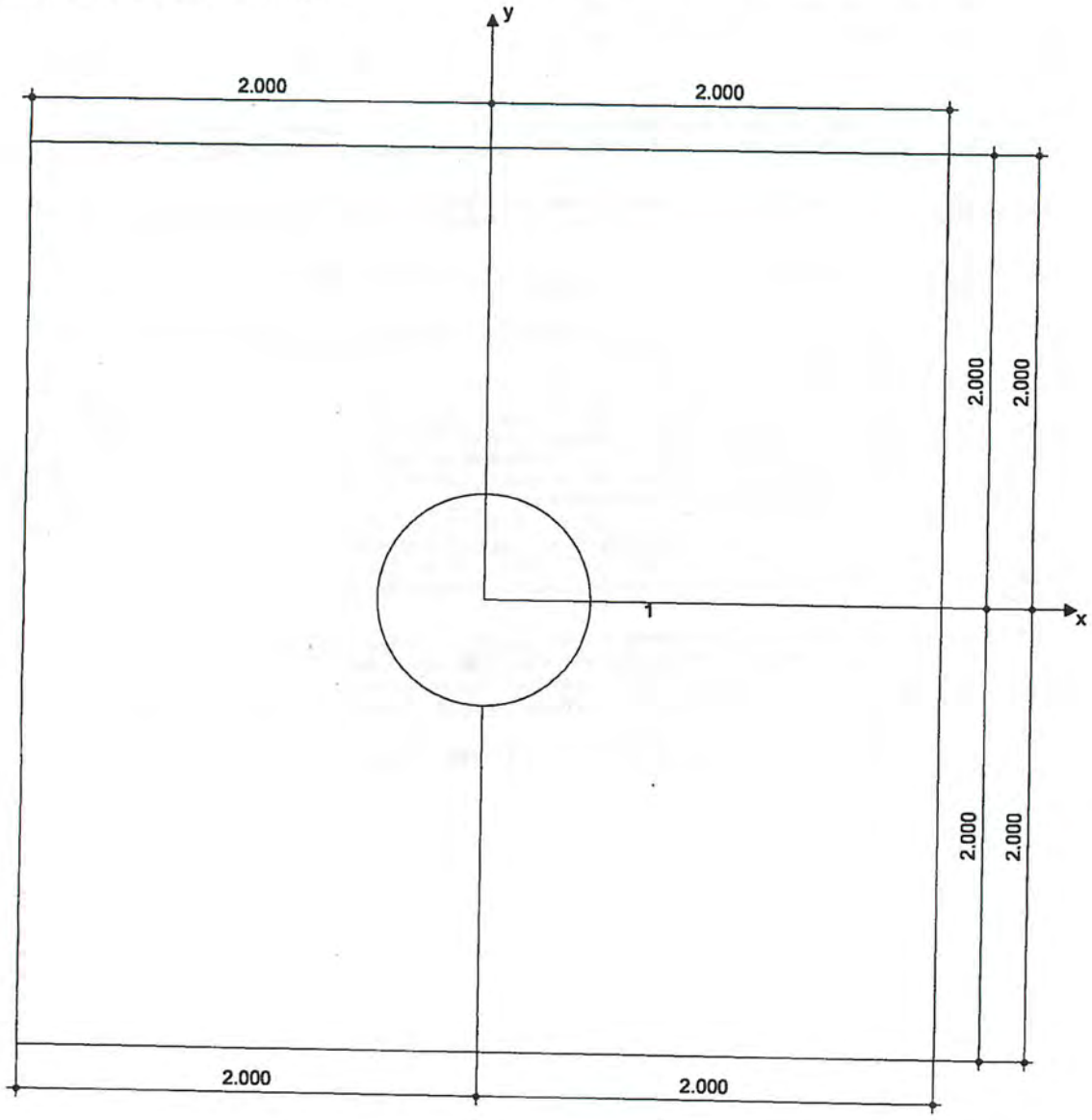

Coordinates Anchor in.

Anchor	x	y	c_{-x}	c_{+x}	c_{-y}	c_{+y}
1	0.000	0.000	-	-	-	-

Input data and results must be checked for agreement with the existing conditions and for plausibility!
PROFIS Anchor (c) 2003-2009 Hilti AG, FL-9494 Schaan Hilti is a registered Trademark of Hilti AG, Schaan

Company:	FRONTENAC ENGINEERING GROUP, INC.	Page:	7
Specifier:	JJS	Project:	PSC FERNLEY,
Address:	2725 SUTTON BLVD	Sub-Project I Pos. No.:	T-5/T-4 ANCHORS
Phone I Fax:	314.644.2200 |	Date:	6/26/2013
E-Mail:	joshs@fe-stl.com		

7 Remarks; Your Cooperation Duties

- Any and all information and data contained in the Software concern solely the use of Hilti products and are based on the principles, formulas and security regulations in accordance with Hilti's technical directions and operating, mounting and assembly instructions, etc., that must be strictly complied with by the user. All figures contained therein are average figures, and therefore use-specific tests are to be conducted prior to using the relevant Hilti product. The results of the calculations carried out by means of the Software are based essentially on the data you put in. Therefore, you bear the sole responsibility for the absence of errors, the completeness and the relevance of the data to be put in by you. Moreover, you bear sole responsibility for having the results of the calculation checked and cleared by an expert, particularly with regard to compliance with applicable norms and permits, prior to using them for your specific facility. The Software serves only as an aid to interpret norms and permits without any guarantee as to the absence of errors, the correctness and the relevance of the results or suitability for a specific application.
- You must take all necessary and reasonable steps to prevent or limit damage caused by the Software. In particular, you must arrange for the regular backup of programs and data and, if applicable, carry out the updates of the Software offered by Hilti on a regular basis. If you do not use the AutoUpdate function of the Software, you must ensure that you are using the current and thus up-to-date version of the Software in each case by carrying out manual updates via the Hilti Website. Hilti will not be liable for consequences, such as the recovery of lost or damaged data or programs, arising from a culpable breach of duty by you.

PROFIS Anchor (c) 2003-2009 Hilti AG, FL-9494 Schaan Hilti is a registered Trademark of Hilti AG, Schaan

FRONTENAC ENGINEERNIG GROUP, INC.
2725 Sutton Boulevard
St. Louis, Missouri 63143
Phone: (314) 644-2200
Fax: (314) 644-0645

JOB	PSC FERNLEY, NEVADA	TANK T-4 FOUNDATION DESIGN	
SHEET NO.	1	OF	4
CALCULATED BY	JJS	DATE	6/26/2013
CHECKED BY	AKF	DATE	3/25/2013
SCALE			

COMBINED FOOTING ANALYSIS AND DESIGN (ACI318-05)

TEDDS calculation version 2.0.03.04

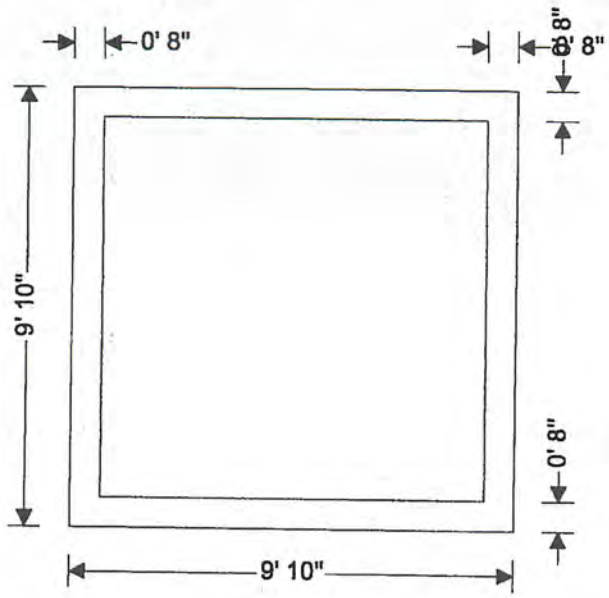

Combined footing details

Length of combined footing	L = **9.830** ft	Width of combined footing	B = **9.830** ft
Depth of combined footing	h = **6.000** in	Depth of soil over footing	h_{soil} = **0.000** in
Density of concrete	ρ_{conc} = **150.0** lb/ft³		

Column details

Column base length	l_A = **102.000** in	Column base width	b_A = **102.000** in
Column eccentricity in x	e_{PxA} = **0.000** in	Column eccentricity in y	e_{PyA} = **0.000** in

Soil details

Depth of soil over footing	h_{soil} = **0.000** in	Density of soil	ρ_{soil} = **120.0** lb/ft³
Allowable bearing pressure	$P_{bearing}$ = **1.500** ksf		

Axial loading on column

Dead axial load	P_{GA} = **44.500** kips	Live axial load	P_{QA} = **0.000** kips
Wind axial load	P_{WA} = **0.000** kips	Total axial load	P_A = **44.500** kips

Foundation loads

Dead surcharge load	F_{Gsur} = **0.000** ksf	Live surcharge load	F_{Qsur} = **0.000** ksf
Footing self weight	F_{swt} = **0.075** ksf		
Soil self weight	F_{soil} = **0.000** ksf	Total foundation load	F = **7.247** kips

Moment on column base

Dead moment in x direction	M_{GxA} = **0.000** kip_ft	Dead moment in y direction	M_{GyA} = **0.000** kip_ft
Live moment in x direction	M_{QxA} = **0.000** kip_ft	Live moment in y direction	M_{QyA} = **0.000** kip_ft

FRONTENAC ENGINEERNIG GROUP, INC.
2725 Sutton Boulevard
St. Louis, Missouri 63143
Phone: (314) 644-2200
Fax: (314) 644-0645

JOB	PSC FERNLEY, NEVADA		TANK T-4 FOUNDATION DESIGN
SHEET NO.	2	OF	4
CALCULATED BY	JJS	DATE	6/26/2013
CHECKED BY	AKF	DATE	3/25/2013
SCALE			

Wind moment in x direction M_{wxA} = **0.000** kip_ft
Wind moment in y direction M_{wyA} = **40.000** kip_ft (SEISMIC)
Total moment in x direction M_{xA} = **0.000** kip_ft
Total moment in y direction M_{yA} = **40.000** kip_ft

Check stability against overturning in y direction

Total overturning moment M_{yOT} = **40.000** kip_ft
Total restoring moment M_{yres} = **254.337** kip_ft

PASS - Restoring moment is greater than overturning moment in y direction

Calculate base reaction

Total base reaction T = **51.7** kips
Base reaction eccentricity in x e_{Tx} = **0.000** in
Base reaction eccentricity in y e_{Ty} = **9.276** in

Base reaction acts within middle third of base

Calculate base pressures

q_1 = **0.283** ksf
q_2 = **0.788** ksf
q_3 = **0.283** ksf
q_4 = **0.788** ksf
Minimum base pressure q_{min} = **0.283** ksf
Maximum base pressure q_{max} = **0.788** ksf

PASS - Maximum base pressure is less than allowable bearing pressure

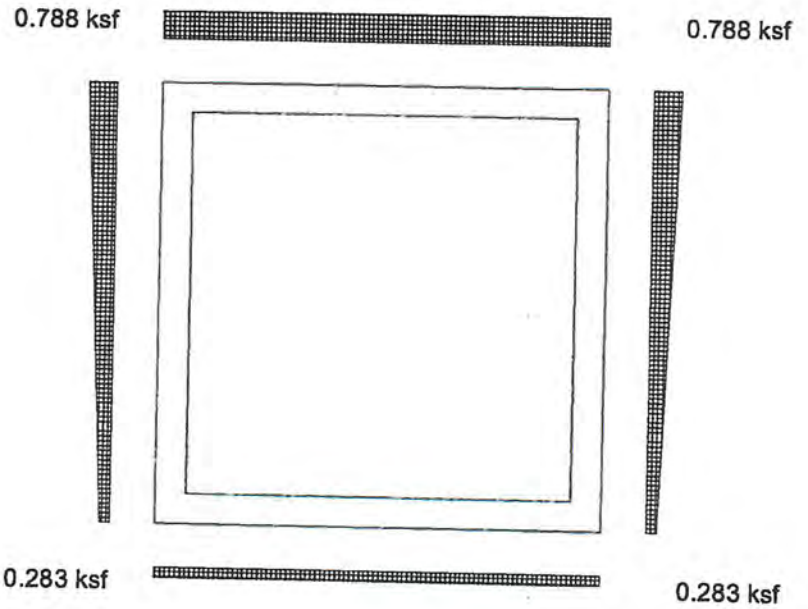

Load combination factors for loads

Dead loads γ_{fG} = **0.90**
Live loads γ_{fQ} = **0.00**
Wind loads γ_{fW} = **1.60**

Strength reduction factors

Flexural strength reduction ϕ_f = **0.90**
Shear strength reduction ϕ_s = **0.75**

Ultimate axial loading on column

Ultimate axial load on column P_{uA} = **40.050** kips

Ultimate foundation loads

Ultimate foundation load F_u = **6.522** kips

FRONTENAC ENGINEERNIG GROUP, INC.
2725 Sutton Boulevard
St. Louis, Missouri 63143
Phone: (314) 644-2200
Fax: (314) 644-0645

JOB	PSC FERNLEY, NEVADA		TANK T-4 FOUNDATION DESIGN
SHEET NO.	3	OF	4
CALCULATED BY	JJS	DATE	6/28/2013
CHECKED BY	AKF	DATE	3/25/2013
SCALE			

Ultimate horizontal loading on column

Ult.horizontal load in x dir H_{xuA} = **0.000** kips — Ult. horizontal load in y dir H_{yuA} = **0.000** kips

Ultimate moment on column

Ult.moment on column in x dir M_{xuA} = **0.000** kip_ft — Ult.moment on column in y dir M_{yuA} = **64.000** kip_ft

Ultimate base reaction

Ultimate base reaction T_u = **46.572** kips

Ecc.of ult.base reaction in x e_{Txu} = **0.000** in — Ecc.of ult.base reaction in y e_{Tyu} = **16.490** in

Calculate ultimate base pressures

q_{1u} = **0.078** ksf — q_{2u} = **0.886** ksf — q_{3u} = **0.078** ksf — q_{4u} = **0.886** ksf

Minimum ult.base pressure q_{minu} = **0.078** ksf — Maximum ult.base pressure q_{maxu} = **0.886** ksf

Ultimate moments

Ultimate moment in x dir M_x = **49.211** kip_ft — Ultimate moment in y dir M_y = **81.211** kip_ft

Material details

Comp.strength of concrete f'_c = **4000** psi — Yield strength of reinforcement f_y = **60000** psi

Cover to reinforcement c_{nom} = **1.000** in

Moment design in x direction

Tens.reinforcement provided **11 No. 6 bars btm**

Area of tens.reinforcement $A_{s\_xB\_prov}$ = **4.860** in² — Minimum tens.reinforcement $A_{s\_x\_min}$ = **1.274** in²

PASS - Tension reinforcement provided exceeds minimum tension reinforcement required

Strain in reinforcement ε_{t_x} = **0.01059**

PASS - The section has adequate ductility (cl. 10.3.5)

Nominal moment strength M_{nx} = **54.679** kip_ft — Moment capacity of base M_{capx} = **85.323** kip_ft

PASS - Moment capacity of base exceeds nominal moment strength required

Moment design in y direction

Tens.reinforcement provided **11 No. 6 bars btm**

Area of tens.reinforcement $A_{s\_yB\_prov}$ = **4.860** in² — Minimum tens.reinforcement $A_{s\_y\_min}$ = **1.274** in²

PASS - Tension reinforcement provided exceeds minimum tension reinforcement required

Strain in reinforcement ε_{t_y} = **0.01322**

PASS - The section has adequate ductility (cl. 10.3.5)

Nominal moment strength M_{ny} = **90.235** kip_ft — Moment capacity of base M_{capy} = **103.547** kip_ft

PASS - Moment capacity of base exceeds nominal moment strength required

Calculate ultimate shear force at d from face of column

Ult.pressure for shear q_{su} = **0.875** ksf

Area loaded for shear A_s = **2.748** ft² — Ult.shear force V_{su} = **2.219** kips

Shear design at distance d from face of column

Nominal shear strength V_{nsu} = **2.958** kips — Concrete shear strength V_{c_s} = **69.009** kips

PASS - Nominal shear strength is less than concrete shear strength

Calculate ultimate punching shear force at perimeter of d / 2 from face of column

Ult.press.for punching shear q_{puA} = **0.482** ksf — Avg.effective reinf.depth d = **4.250** in

Area loaded A_{pA} = **78.396** ft² — Length of shear perimeter u_{pA} = **35.417** ft

FRONTENAC ENGINEERNIG GROUP, INC.
2725 Sutton Boulevard
St. Louis, Missouri 63143
Phone: (314) 644-2200
Fax: (314) 644-0645

JOB	PSC FERNLEY, NEVADA		TANK T-4 FOUNDATION DESIGN
SHEET NO.	4	OF	4
CALCULATED BY	JJS	DATE	6/26/2013
CHECKED BY	AKF	DATE	3/25/2013
SCALE			

Ult.punching shear force V_{puA} = **7.557** kips

Punching shear stresses at perimeter of d / 2 from face of column

Nominal shear strength V_{npuA} = **10.076** kips Concrete shear strength V_{c_p} = **274.169** kips

PASS - Nominal shear strength is less than concrete shear strength

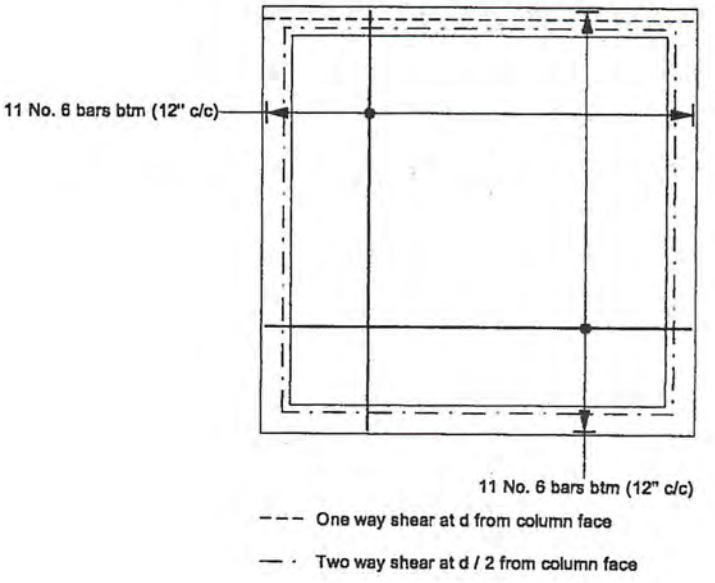

15 / TS12 MIXER SUPPORT BEAM DETAIL

SCALE: 1/2"=1'-0"

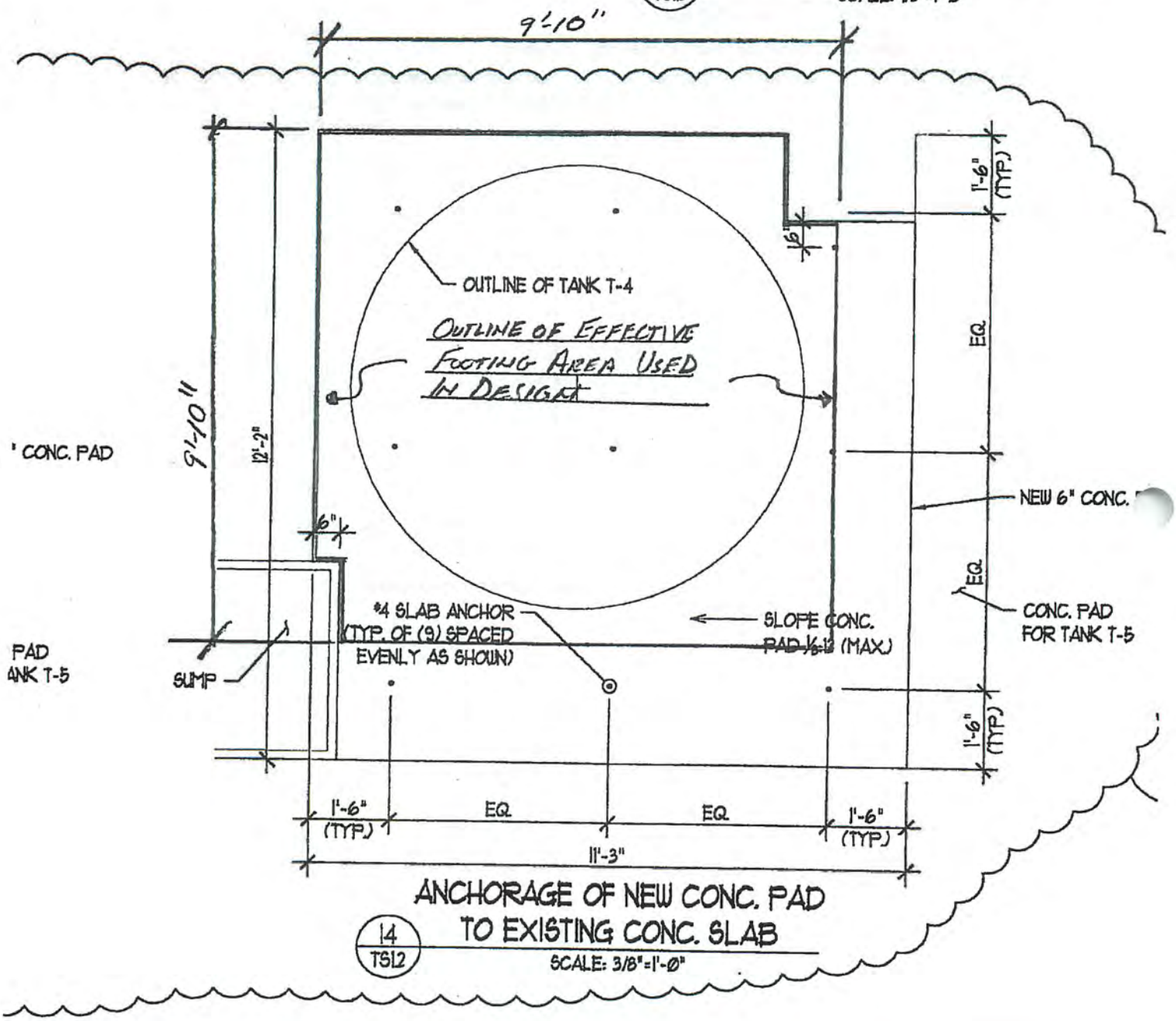

14 / TS12 ANCHORAGE OF NEW CONC. PAD TO EXISTING CONC. SLAB

SCALE: 3/8"=1'-0"

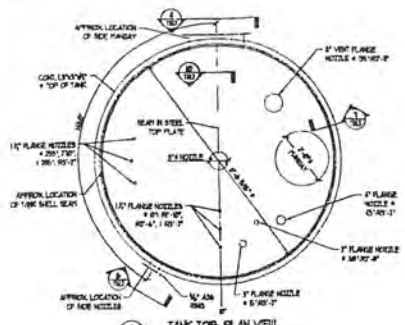

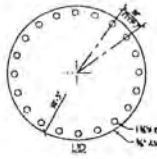

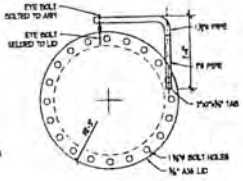

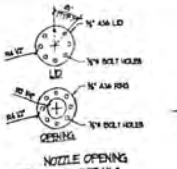

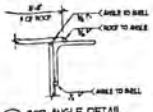

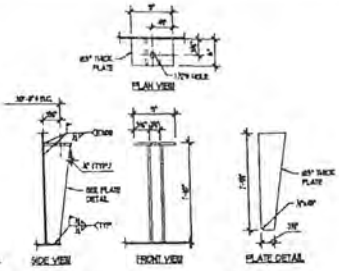

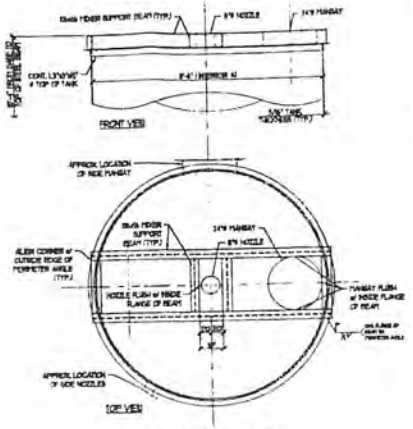

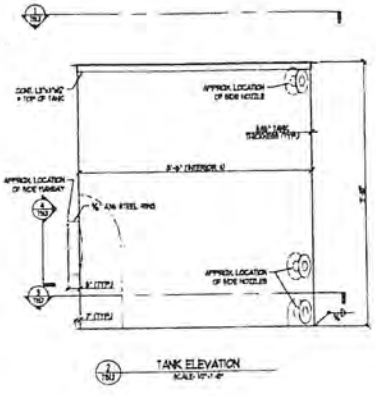

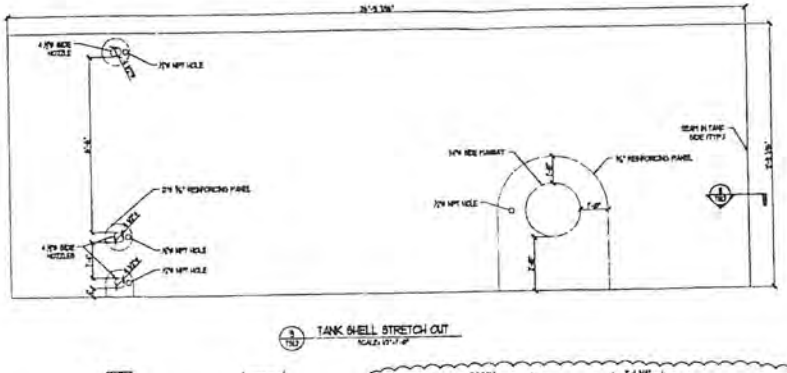

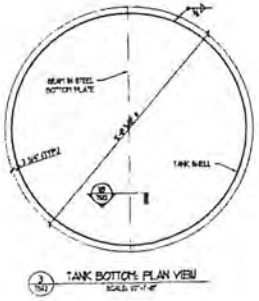

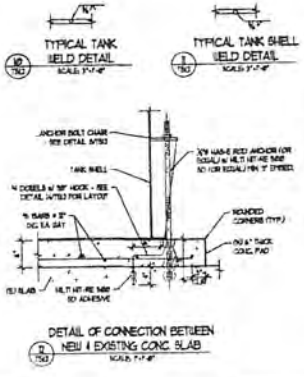

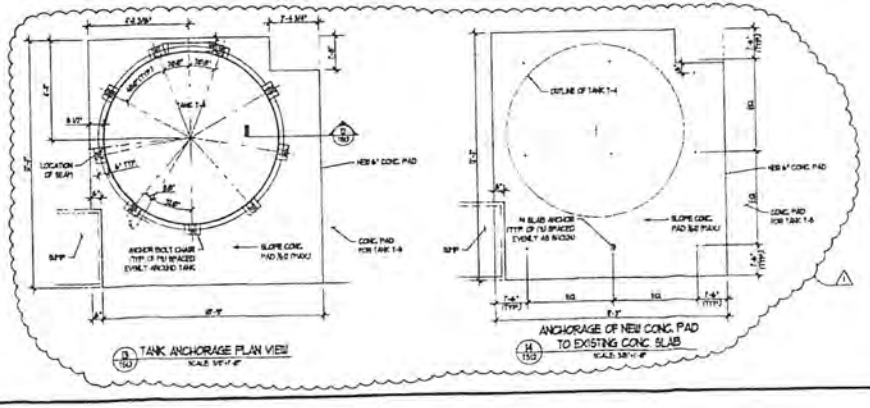

TRANTHAM ENGINEERING GROUP
CIVIL / STRUCTURAL / LAND SURVEYING
2735 SUTTON BLVD.
ST. LOUIS, MISSOURI 63143
PHONE: (314) 645-2000 FAX: (314) 645-6888
www.franthamengineering.com

NO.	DATE	REVISIONS
1	1/29/13	REVISED CONC. SLAB DIMENSIONS

SCALE / REVISION DESCRIPTIONS

DATE: 2/22/13
CHECKED: AS
DRAWN: PMT
SCALE: NOTED

TANK No. T-4 DETAILS

PSC FERNLEY
TANK REPLACEMENT PROJECT
PREPARED FOR AUSENCO PSI
FERNLEY, LYON COUNTY, NEVADA

SHEET NO.
TS1.2

TANK INSPECTION FORM

OWNER: Philip Services Corporation / 21 EMI
PSC Fernley Facility
2095 Newlands Drive East
Fernley, NV 89408
(775)575-2760

TANK NO.: T-4

TANK SHELL INSPECTION

Date Inspected: June 10, 2013

Findings: Multiple Scraps on South Side. Smaller Scraps on West side & around Manway opening.

TANK ANCHORAGE STRUCTURAL OBSERVATION / Tank Pad - 7" high

Type of Anchorage System: Steel Chair w/ (1) Epoxy Anchor per Chair

Date Inspected: June 10, 2013

# of Anchor Plates: 9

AB Type, Diameter and Number/plate: Epoxy, 7/8" ø, 1 per Chair

Size of Anchor Plate & Contact with Tank: Welded to Shell

Special Inspection Completed? Yes

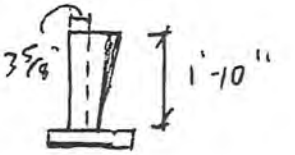

Side View

TANK LEAKAGE TEST

Date Filled: June 13, 2013 — Water Level below Inspection Hatch: 9" (Top of Tank)

Date of Re-inspection: June 14, 2013 — Water Level below Inspection Hatch: 9"

Shell Leakage? No / No

Leakage on Floor/Drain Pan at Manifold? No / No

INSPECTOR: Brian Gill — **DATE:** June 10, 2013

INSPECTOR: Brian Gill — **DATE:** June 13, 2013
June 14, 2013

PROCESS PIPING INSPECTION FORM

Philip Services Corporation / 21 EMI
PSC Fernley Facility
2095 Newlands Drive East
Fernley, NV 89408
(775)575-2760

Tank Number: T-4

Date Inspected: June 14, 2013

Fill Line Assembly:

Number of Fill Line Assemblies: 3 Fill Line Assemblies

Description: Two fill line assemblies were on top of the tank and one fill line assembly was on the side of the tank near the top. The fill lines consisted of bulkhead fittings connected to the tank and temporary pipes connected to the bulkhead fittings. The bulkhead fitting were the only permanent piping at the time of the inspection. There was no damage to the process piping connection or to the tank shell. No evidence of leaking found. The permanent piping is secured and stable.

Discharge Line Assembly:

Number of Discharge Line Assemblies: 2 Discharge Line Assemblies

Description: The discharge line assemblies consisted of bulkhead fittings connected to the tank and temporary pipes connected to the bulkhead fittings. The bulkhead fittings are the only permanent piping in the discharge line assembly. There was no damage to the process piping connection or to the tank shell. No evidence of leaking found. The permanent piping is secured and stable.

INSPECTOR: Brian Gill **DATE:** June 14, 2013

NORTECH Geotechnical/Civil Consultants, Ltd.

FIELD CONSTRUCTION INSPECTION REPORT

PROJECT PSC Environmental JOB NO. 14441-28C

LOCATION 2095 Newlands Drive, Fernley, Nevada REPORT NO. 12

CONTRACTOR L & H Concrete WEEK ENDING 05-18-13

Work Description

May 15 - On site for epoxy inspection on vertical rebar dowels for tank slab (T4). Holes were drilled to proper embed depth (4 inches) and were cleaned out thoroughly. Epoxy and dowels (vertical) were placed in accordance with structural details on sheet TS1.2 on approved plans. I also inspected epoxy and anchor bolts for tank pad 307 for cat walk. Holes were drilled to proper embed depth (5 inches) and cleaned out thoroughly. Bolts (½ inch) and epoxy were placed in accordance with structural details on sheet DWC 5.0 on approved plans. (MSV)

May 16 - Inspected steel reinforcement in slab for tank 4. Rebar has been placed in accordance with details from sheet TS1.2 on approved plans. I remained on site for concrete pour of the T4 slab. I sampled concrete and performed one passing slump test and cast one set of four cylinders. Temperature of the 4000 psi mix was 66 degrees. Cylinders have been stored in a cure box for initial curing and over night protection. NOTE: Contractor added one gallon of plasticizer to 3-1/2 yard load for workability. (MEV)

May 17 - Inspected placement of 32 1\2" x 4" embedment all thread anchor bolts at seismic plate to slab connections at tank 6. Contractor has drilled holes to proper embed depths and has cleaned holes thoroughly with an air compressor and brush (wire). I observed placement of bolts and epoxy. Project was completed in accordance with detail 5/TA1.0 on approved plans. I also inspected welding of seismic plate to tank and seismic plate to continuity plate connections (16 locations) at tank 6. Welding has been completed in accordance with detail 4/TA1.0 on approved plans and AWS specifications. (MEV)

NORTECH
GEOTECHNICAL/CIVIL CONSULTANTS, LTD.
300 Western Road, #3, Reno, NV 89506 · (775) 852-7475 FAX (775) 852-7488

REPORT OF CONCRETE CYLINDER TEST

Project Number: 14441-28C
Project: PSC Environmental
Client: Equipment Pro, Inc.
Address: 721 Parkwood Dr., Ste. Genevieve, MO 63670

Report Number: 7

Attn:

FIELD TEST CONDITIONS AND RESULTS (ASTM C31)

Date Placed: 5/16/2013
Time Sampled: 11:30 AM
Location of Sample: T4 Slab
Supplier: 3D
Truck Number: 480
Mix Number: 1230CT
Design Strength: 4000 psi
Time Batched: 10:37 AM
Batch Size: 3.5 yds.
Slump: 5 in. (ASTM C 143)
Concrete Temp: 66 °F
Water Added: Plasticizer, 1 gal.

Ticket Number: 44566

Time Placed: 11:30 AM

Air Content: N/A % (ASTM C 173)
Ambient Temp: 65 °F
Technician: MEV

LABORATORY TEST RESULTS (ASTM C39)

Specimen	Test Date	Age	Load	Diameter	Area	Strength	Percent of Design	Type of Fracture
764	5/23/2013	7	32540	4.00	12.57	2590		1
765	6/13/2013	28	52140	4.00	12.57	4150	104%	1
766	6/13/2013	28	53410	4.00	12.57	4250	106%	1
767		0		4.00	12.57			

Remarks:

Copies to:

TYPES OF FRACTURE

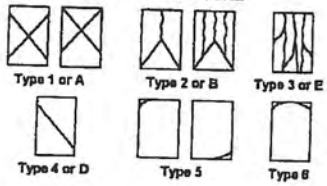

Reported by:

Kent Seegmiller
Concrete Laboratory Manager

NORTECH Geotechnical/Civil Consultants, Ltd.

FIELD CONSTRUCTION INSPECTION REPORT

PROJECT PSC Environmental JOB NO. 14441-28C

LOCATION 2095 Newlands Drive, Fernley, Nevada REPORT NO. 14

CONTRACTOR L & H Concrete WEEK ENDING 06-08-13

Work Description

June 7 - Inspected placement of 9 - one inch* epoxy set all thread anchor bolts at tank 4 plate to slab connections. Contractor has drilled holes to proper embed depths and has thoroughly cleaned holes with air compressor and wire brush. I observed placement of bolts and epoxy (Hilti RE 500 SD as required). Project was completed in accordance with detail 12.TS1.2 on approved plans. (MEV)

* 7/8 inch dia. specified on plans

Tank Data Sheet

RCRA Regulated? YES

Tank Location: DETOX ROOM

Tank Name: TREATMENT TANK

Tank Numbers: T-4, T-5

Process Description: NEUTRALIZATION, OXIDIZER, CYANIDE/SULFIDE TREATMENT

Vessel Fluid: AQUEOUS-BASED WASTE LIQUIDS

Specific Gravity: <1.25

Freeboard At Working Vol (ft cubed): 1' - 0"

Normal Operating Pressure: ATMOSPHERIC

Temperature (F°) AMBIENT

	Material	Thickness	Type
Bottom	CARBON STEEL PLATE	5/16" NOMINAL	FLAT
Shell	CARBON STEEL PLATE	5/16" NOMINAL	CYLINDRICAL-VERTICAL
Roof	CARBON STEEL PLATE	5/16" NOMINAL	SELF-SUPPORTING CONE

Working Volume (USG): 3,750 GALLONS

Insulation: NONE

Nominal Volume (USG): 4,175 GALLONS

Method of Construction: WELDED STEEL

Tank I.D. (ft): 8' - 6"

Tank Height or Length (ft): 9' - 10"

Design Code Used: API 650.10TH EDITION

Date in Service: TBD

Anchorage: BOLTED TO CONCRETE. Anchorage designs per 2006 IBC.

Connections:

Item No:	Size (In.)	Gasket	Description
1	24"		SIDE MANWAY
2	4"		SIDE FLANGE NOZZLE (2)
3	24"		ROOF MANWAY
4	8"		MIXER FLANGE NOZZLE
5	8"		VENT FLANGE NOZZLE
6	4"		FLANGE NOZZLE
7	3"		FLANGE NOZZLE
8	2"		FLANGE NOZZLE
9	1 1/4"		FLANGE NOZZLE (6)
10			BAFFLES (4)
11			
12			
13			
14			
15			

Tank Sketch:

Interior Coating: VersaFlex LC-25 Lock Coat, VT-40 Finish Coat, FSS50 DM Spray Polyurea

Exterior Coating: Basecoat epoxy, Topcoat Polyurethane enamel

Tank Mfger: Frontenac Engineering

Remarks:

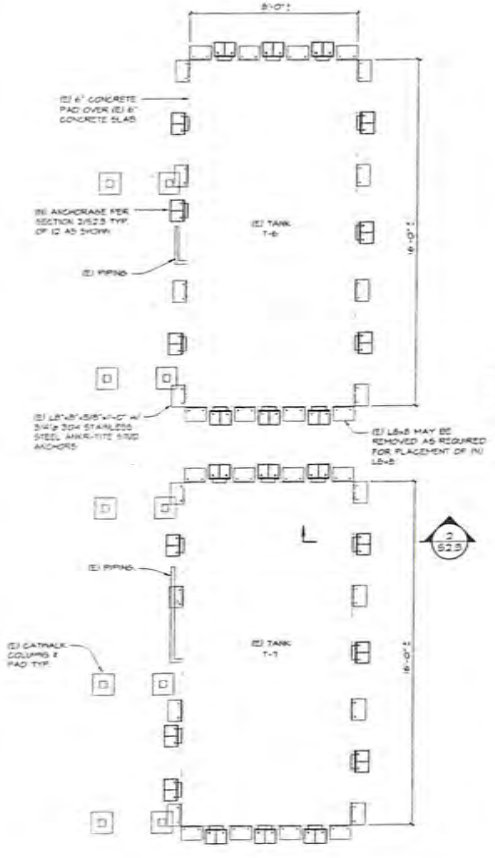

(E) TANK NO. T-6 AND T-7 ANCHORAGE PLAN VIEW

1 / S2.3

SCALE: 3/8"=1'-0"

NOTES: 1. SEE DETAIL 2/S2.2 FOR (N) TANK LID PLAN

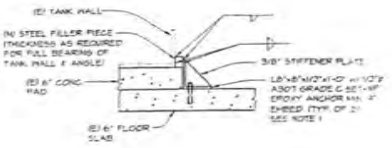

2 / S2.3 ANCHORAGE SECTION

SCALE: 3/4"=1'-0"

NOTES: 1. EPOXY ANCHORS SHALL BE PERIODICALLY INSPECTED

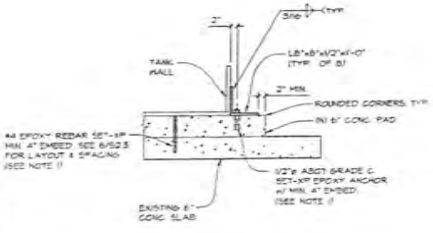

4 / S2.3 ANCHORAGE SECTION

SCALE: 3/4"=1'-0"

NOTES: 1. EPOXY ANCHORS & REBAR SHALL BE PERIODICALLY INSPECTED

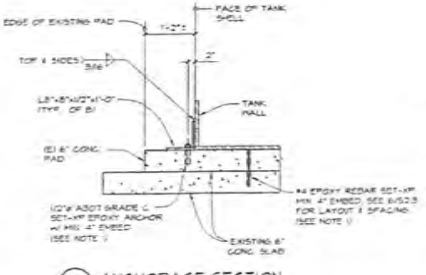

5 / S2.3 ANCHORAGE SECTION

SCALE: 3/4"=1'-0"

NOTES: 1. EPOXY ANCHORS & REBAR SHALL BE PERIODICALLY INSPECTED

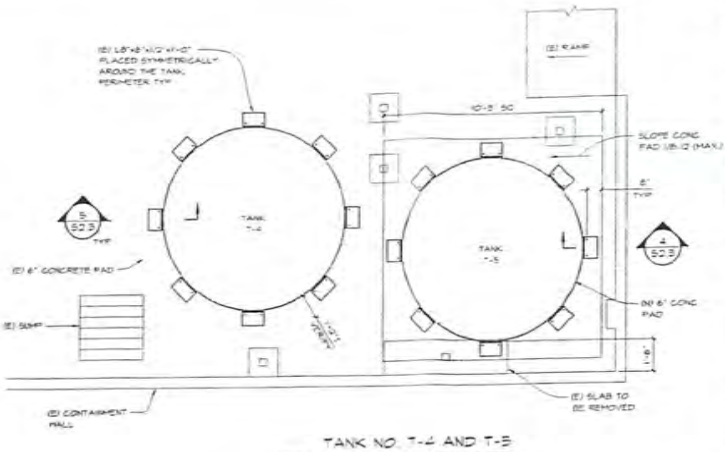

TANK NO. T-4 AND T-5 ANCHORAGE PLAN VIEW

3 / S2.3

SCALE: 3/8"=1'-0"

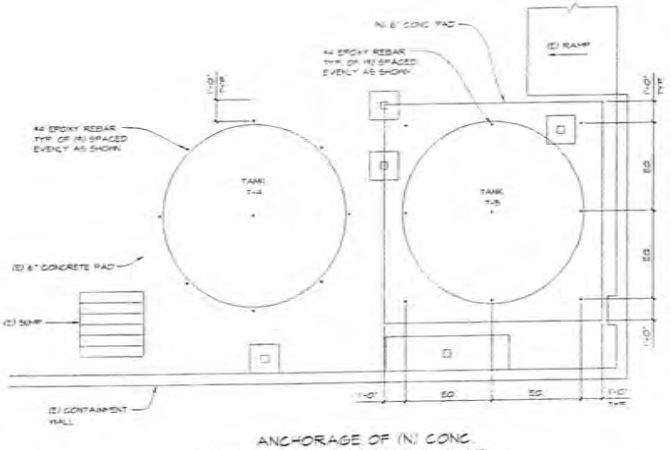

ANCHORAGE OF (N) CONC. PAD TO (E)/(N) CONC. SLAB

6 / S2.3

SCALE: 3/8"=1'-0"

PRELIMINARY NOT FOR CONSTRUCTION

ADDITION DATE 10/09/09

REVISION NUMBER 1

tobey wade
CONSULTING
329 Flint Street
Reno, Nevada 89501
Tel. (775) 324-7757 Fax (775) 324-7797

TANK NO.'S T-4, T-5, T-6 AND T-7 PLANS AND ANCHORAGE DETAILS

TANK REPLACEMENT PROJECT

PREPARED FOR

21ST CENTRY ENVIRONMENTAL MANAGEMENT OF NV

LYON COUNTY NEVADA

FERNLEY

NO.	REVISIONS DESCRIPTION	BY

EXPIRES JUNE 30, 2010

TERRENCE K. TOBEY, S.E.

JOB NO.	9103-07-04
DESIGNED	T.K.T.
DRAWN	S.B.M.
CHKD.	
CHECKED	
DATE	SEP. 21, 2009

S2.3

tobey wade
STRUCTURAL ENGINEERS

June 27, 2013
Project No. R405-08-13

Ms. Tracy Buono
Facility/Operations Manager
PSC FERNLEY FACILITY
2095 Newlands Drive East
Fernley, NV 89408

RE: TANK T-4 INTERIM CERTIFICATION

Dear Ms. Buono:

In accordance with the Fernley Facility Amended Tank Replacement Plan dated December 17, 2012, and Appendix D-6 of the pending July 2012 RECRA Permit, each new tank is required to be certified by Independent Registered Professional Engineers (IRPE's) prior to being placed into service. This letter has been prepared to document the evaluation of Tank T-4 as performed by Tobey-Wade Consulting.

It should be noted that Tank T-4 currently has permanent bulkhead fittings with valves for connection of temporary fill and discharge lines. The permanent process piping servicing Tank T-4 will be installed in Phase 3 as outlined in the above-referenced documents. Accordingly, this certification is being provided as an interim certification. Final certification of Tank T-4 will be provided after the permanent piping and all other associated permanent systems have been installed and inspected.

Background

Tank T-4 is a welded structural steel tank with a working capacity of 3,750 gallons. Frontenac Engineering designed the tank shell and conducted a structural evaluation to determine the foundation requirements under static and dynamic (seismic) loads. Frontenac Engineering also conducted a stability analysis and designed anchorage for the tank. A copy of their calculations is attached.

Certification of the tank liner's compatibility with the proposed waste stream has been provided by others.

NEVADA OFFICE
648 LANDER STREET ▪ RENO, NEVADA 89509 ▪ TEL: (775) 324.7757 ▪ FAX: (775) 324.7797

Findings

Based on our evaluation, the following systems are hereby certified as being in compliance with the Amended Tank Replacement plan:

- Tank T-4 has sufficient strength to contain the proposed waste materials without rupturing based on the design analysis performed by Frontenac Engineering.
- Tank T-4 will be situated on a reinforced concrete foundation system which is capable of adequately supporting the tank and its contents under static and dynamic conditions based on the design analysis performed by Frontenac Engineering.
- Tank T-4 will be located in an area with sufficient secondary containment as required by 40 CFR Ch. I, 264.193.
- Tank T-4 is anchored to resist overturning when subjected to site-specific 2006 International Building Code level seismic events based on the design analysis performed by Frontenac Engineering.
- Tank T-4 is anchored to prevent sliding when subjected to site-specific 2006 International Building Code level seismic events based on the design analysis performed by Frontenac Engineering.
- Tank T-4 has been subjected to a 24-hour leak test and found to be watertight. The Tank Leakage Test results are included in the Tank Inspection Form, copy attached.
- The exterior of Tank T-4's shell wall has been inspected and found to be undamaged, other than for minor scrapes. The Tank Shell Inspection results are included in the Tank Inspection Form, copy attached.
- The process piping fill and discharge connections have been inspected and found to be undamaged and with no evidence of leakage. The piping connections are adequately attached to the tank to prevent displacement during an earthquake. The associated Process Piping inspection form is attached.
- Special Inspection of the new foundation slab and the tank anchor bolt installation was performed as required by the International Building Code. Copies of the Special Inspection reports are attached. The tank shell welding was inspected by Frontenac Engineering and found to meet code requirements. A copy of their inspection report is attached.

Tobey-Wade Consulting witnessed the tank leakage test and conducted the tank shell inspection, under my direct supervision. Special Inspections were performed by inspectors from Nortech Consultants based on anchorage requirements provided by Frontenac Engineering.

Certification Statement

I certify under penalty of law that this report and all attachments were prepared under my direction and supervision in accordance with a system developed to assure that qualified personnel properly gather and evaluate the information submitted. Based on my inquiry of the person or persons who manage the system or those persons directly responsible for gathering the information, the information, submitted is, to the best of my knowledge and belief, true, accurate, and complete. I am aware that there are significant penalties for submitting false information, including the possibility of fines and imprisonment for knowing violations.

This report has been prepared in accordance with accepted engineering practices and is subject to the assumptions and limitations stated in the report. Also note that this certification covers the aforementioned aspects of Tank T-4 only.

Please feel free to contact me at your convenience should you have any questions relating to our findings.

Sincerely,
TOBEY-WADE CONSULTING

Terrence R. Tobey

TERRENCE R. TOBEY, P.E., S.E.
Principal Structural Engineer

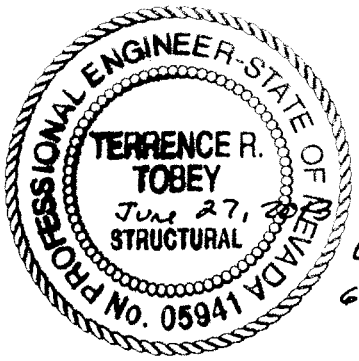

CIVIL / STRUCTURAL / LAND SURVEYING

PSC Environmental Services, LLC
Fernley, Lyon County, Nevada

Structural Calculations
For
T-4 Tank and Foundation

Design Code: 2006 IBC

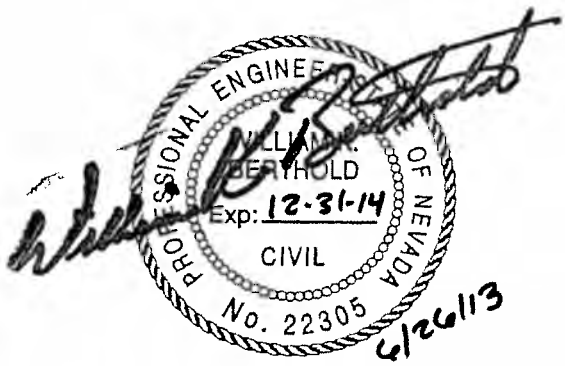

Prepared for:

Mr. Jim Dailey
Equipment Pro Incorporated
721 Parkwood Drive
Ste. Genevieve, MO 63670

June 26, 2013

FEG Project Number: 121039

Seismic Design of Tank and Anchors Per API 650

Date: June 26, 2013 Calc By: JJS

Job No. 121039 Check By: WKB

Description: Seismic Design of T-4 Tank and Anchors

Site Information

Seismic Use Group:	II
Importance Factor:	1.25
S_s	1.335
S_1	0.531
F_a	1.000
F_v	1.300
S_{MS}	1.335
S_{M1}	0.690
S_{DS}	0.890
S_{D1}	0.460
T_L	12
g	32.4

Tank Information

S.G.	1.25	
ρ	78	
D	8.5	
H	9.75	
D/H	0.871795	
W_f	800	Weight of Tank Bottom
W_p	39000	Weight of Tank Contents
W_r	1000	Weight of Tank Roof (includes framing, knuckles, etc.)
W_s	3500	Weight of Tank Shell (includes appurtenances)
W_T	44300	Total Weight of Tank (Wf + Wr + Ws + Wp)
E_s	29000000	
n_A	9	Number of Equally Spaced Anchors
t	0.3125	Thickness of shell ring under consideration
t_b	0.3125	Thickness of tank bottom minus corrosiion allowance
t_s	0.3125	Thickness of bottom shell course minus corrosion allowance
t_u	0.3125	Equivalent uniform thickness of tank shell
μ	0.4	Coefficient of friction between tank base and foundation
F_y	36000	

Impulsive Natural Period

H/D	1.15
C_i	6.45 From Figure E-1
T_i	0.019 sec

Convective (Sloshing) Period

K_s	0.578
T_c	1.686 sec

Impulsive spectral Acceleration Parameter, Ai:

R_{wi}	4 (3.5 for Self-Anchored, 4 for Mechanically Anchored)
A_i	0.278

Convective Spectral Acceleration Parameter, Ac:

R_{wc}	2
A_c	0.256

Design Loads

W_i	31588 lb
W_c	7816.551 lb
V_i	10259 lb
V_c	2001 lb
V	10453 lb (SRSS)

Center of Action for Ringwall Overturning Moment

X_i	4.08 ft
X_c	7.50 ft

Center of Action for Slab Overturning Moment

X_{is}	5.385 ft

X_{cs}	7.57 ft	

Vertical Seismic Effects

F_v	5520 lb	

Dynamic Liquid Hoop Forces

N_i	41.4 psi	D/H>=1.33
N_i	34.9 psi	D/H<1.33
N_c	22.7 psi	
N_h	241.7 psi	
σ_{T1}	952.6 psi	D/H>=1.33
σ_{T2}	594.4 psi	
σ_{T1}	937.9 psi	D/H<1.33
σ_{T2}	376.5 psi	

Overturning Moment

M_{rw}	45222 ft-lb	
M_s	56820 ft-lb	

Overturning Resisting Force of Annulus

w_a	132.6 psi	

Anchorage Ratio

w_{rs}	37.4 lb/ft	
w_t	168.5 lb/ft	
J	2.98	Anchor Bolts are Required

Anchor Bolt Requirements

w_{AB}	843.4 lb/ft	
$(P_{AB})_U$	2502.3 lb	Ultimate Design Tension Force per Achor

Maximum Longitudinal Shell-Membrane Compression Stress (Mechanically Anchored Tanks)

σ_c	259.7 psi	

Allowable Longitudinal Shell-Membrane Compresion Stress

F_c	16800.52 psi	OK

Check Overturning Stability

M_{resist}	184025 ft-lb	
$(M_s)_U$	56820 ft-lb	
F.S.	3.24	Must be greater than 2.0.
$(M_s)_{max}$	39774.28	[0.7 x $(M_s)_U$] Service Moment for Use in Foundation Design

Sliding Resistance

V_s	16837 lb	
V	10453 lb	
F.S.	1.61	Must be greater than 1.0

Check Local Shear Transfer

V_{max}	783 lb	
V_{allow}	12934 lb	
F.S.	16.5	Must be greater than 1.0

Frontenac Engineering Group
2725 Sutton Boulevard
Saint Louis, Missouri 63143
314-644-2200 Fax 314-644-0645

JOB 13255 T-4 TANK
SHEET NO. _____ OF _____
CALCULATED BY JJS DATE 6/26/13
CHECKED BY _____ DATE _____
SCALE _____

CHECK SEISMIC HOOP STRESS ON SHELL

FROM PREVIOUS CALCULATIONS:

$A_i = 0.278$
$A_c = 0.356$
$A_v = 0.2 S_{DS} = 0.18$
$N_i = 34.9 psi$
$N_c = 22.7 psi$
$N_h = 241.7 psi$
$t = 5/16 = 0.3125''$

$$\sigma_t = \sigma_n \pm \sigma_s = \frac{N_h \pm \sqrt{N_i^2 + N_c^2 + (A_v N_h)^2}}{t}$$

$$= \frac{241.7 \pm 60.2}{0.3125}$$

$\sigma_t = 966 psi$

$\sigma_t = 580 psi$

ALLOWABLE HOOP STRESS = $S_d = \underset{\text{GOVERNS}}{23{,}200} \leq 0.9 F_y = 32{,}400$

SINCE $\sigma_t = 966 psi < 23{,}200$, THICKNESS IS ADEQUATE

Company:	FRONTENAC ENGINEERING GROUP, INC.	Page:	1
Specifier:	JJS	Project:	PSC FERNLEY,
Address:	2725 SUTTON BLVD	Sub-Project I Pos. No.:	T-5/T-4 ANCHORS
Phone I Fax:	314.644.2200 |	Date:	6/26/2013
E-Mail:	joshs@fe-stl.com		

Specifier's comments:

1 Input data

Anchor type and diameter:	**HIT-RE 500-SD + HAS B7 7/8**
Effective embedment depth:	$h_{ef,act}$ = 9.000 in. ($h_{ef,limit}$ = - in.)
Material:	ASTM A 193 Grade B7
Evaluation Service Report:	ESR-2322
Issued I Valid:	3/1/2013 | 4/1/2014
Proof:	design method ACI 318 / AC308
Stand-off installation:	e_b = 0.000 in. (no stand-off); t = 0.313 in.
Anchor plate:	l_x x l_y x t = 4.000 in. x 4.000 in. x 0.313 in.; (Recommended plate thickness: not calculated)
Profile:	no profile
Base material:	cracked concrete, 4000, f_c' = 4000 psi; h = 12.000 in., Temp. short/long: 32/32 °F
Installation:	hammer drilled hole, installation condition: dry
Reinforcement:	tension: condition B, shear: condition B; no supplemental splitting reinforcement present edge reinforcement: none or < No. 4 bar
Seismic loads (cat. C, D, E, or F)	yes (D.3.3.6)

Geometry [in.] & Loading [lb, in.lb]

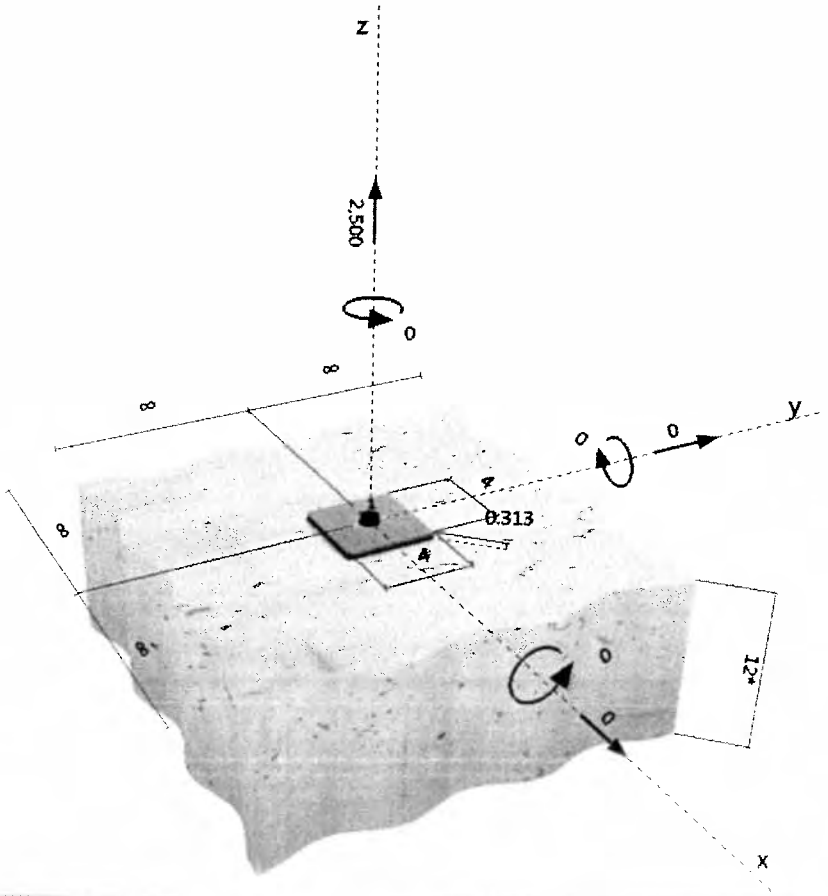

PROFIS Anchor (c) 2003-2009 Hilti AG, FL-9494 Schaan Hilti is a registered Trademark of Hilti AG, Schaan

Company: FRONTENAC ENGINEERING GROUP, INC.
Specifier: JJS
Address: 2725 SUTTON BLVD
Phone I Fax: 314.644.2200 |
E-Mail: joshs@fe-stl.com

2 Load case/Resulting anchor forces

Load case: Design loads

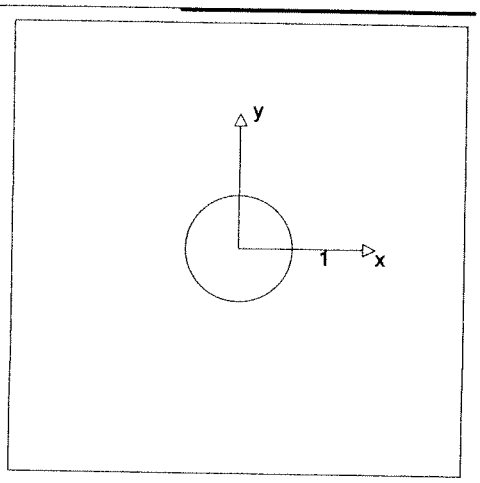

Anchor reactions [lb]
Tension force: (+Tension, -Compression)

Anchor	Tension force	Shear force	Shear force x	Shear force y
1	2500	0	0	0

max. concrete compressive strain: - [‰]
max. concrete compressive stress: - [psi]
resulting tension force in (x/y)=(0.000/0.000): 2500 [lb]
resulting compression force in (x/y)=(0.000/0.000): 0 [lb]

3 Tension load

	Load N_{ua} [lb]	Capacity ϕN_n [lb]	Utilization $\beta_N = N_{ua}/\phi N_n$	Status
Steel Strength*	2500	43282	6	OK
Bond Strength**	2500	2441	103	not recommended
Concrete Breakout Strength**	2500	5661	45	OK

* anchor having the highest loading **anchor group (anchors in tension)

3.1 Steel Strength

N_{sa} = ESR value refer to ICC-ES ESR-2322
$\phi N_{steel} \geq N_{ua}$ ACI 318-08 Eq. (D-1)

Variables

n	$A_{se,N}$ [in.^{2}]	f_{uta} [psi]
1	0.46	125000

Calculations

N_{sa} [lb]
57710

Results

N_{sa} [lb]	ϕ_{steel}	ϕN_{sa} [lb]	N_{ua} [lb]
57710	0.750	43282	2500

Input data and results must be checked for agreement with the existing conditions and for plausibility!
PROFIS Anchor (c) 2003-2009 Hilti AG, FL-9494 Schaan Hilti is a registered Trademark of Hilti AG, Schaan

Company: FRONTENAC ENGINEERING GROUP, INC.
Specifier: JJS
Address: 2725 SUTTON BLVD
Phone I Fax: 314.644.2200 |
E-Mail: joshs@fe-stl.com

3.2 Bond Strength

$N_a = \left(\frac{A_{Na}}{A_{Na0}}\right) \psi_{ed,Na}\, \psi_{p,Na}\, N_{a0}$ — ICC-ES AC308 Eq. (D-16a)

$\phi\, N_a \geq N_{ua}$ — ACI 318-08 Eq. (D-1)

A_{Na} = see ICC-ES AC308, Part D.5.3.7

$A_{Na0} = s_{cr,Na}^2$ — ICC-ES AC308 Eq. (D-16c)

$s_{cr,Na} = 20d \sqrt{\frac{\tau_{k,uncr}}{1450}} \leq 3\, h_{ef}$ — ICC-ES AC308 Eq. (D-16d)

$c_{cr,Na} = \frac{s_{cr,Na}}{2}$ — ICC-ES AC308 Eq. (D-16e)

$\psi_{ed,Na} = 0.7 + 0.3 \left(\frac{c_{a,min}}{c_{cr,Na}}\right) \leq 1.0$ — ICC-ES AC308 Eq. (D-16m)

$\psi_{g,Na} = \psi_{g,Na0} + \left[\left(\frac{s_{avg}}{s_{cr,Na}}\right)^{0.5} \cdot (1 - \psi_{g,Na0})\right] \geq 1.0$ — ICC-ES AC308 Eq. (D-16g)

$\psi_{g,Na0} = \sqrt{n} - \left[(\sqrt{n} - 1) \cdot \left(\frac{\tau_{k,c}}{\tau_{k,max,c}}\right)^{1.5}\right] \geq 1.0$ — ICC-ES AC308 Eq. (D-16h)

$\tau_{k,max,c} = \frac{k_c}{\pi \cdot d} \sqrt{h_{ef} \cdot f_c'}$ — ICC-ES AC308 Eq. (D-16i)

$\psi_{ec,Na} = \left(\frac{1}{1 + \frac{2e_N'}{s_{cr,Na}}}\right) \leq 1.0$ — ICC-ES AC308 Eq. (D-16j)

$\psi_{p,Na} = MAX\left(\frac{c_{a,min}}{c_{ac}}, \frac{c_{cr,Na}}{c_{ac}}\right) \leq 1.0$ — ICC-ES AC308 Eq. (D-16p)

$N_{a0} = \tau_{k,c} \cdot \alpha_{N,seis} \cdot \kappa_{bond} \cdot \pi \cdot d \cdot h_{ef}$ — ICC-ES AC308 Eq. (D-16f)

Variables

$\tau_{k,c,uncr}$ [psi]	d_{anchor} [in.]	h_{ef} [in.]	$c_{a,min}$ [in.]	s_{avg} [in.]	n	$\tau_{k,c}$ [psi]
2000	0.875	9.000	∞	0.030	1	920

k_c	f_c' [psi]	$e_{c1,N}$ [in.]	$e_{c2,N}$ [in.]	c_{ac} [in.]	κ_{bond}	$\alpha_{N,seis}$
17	4000	0.000	0.000	22.487	1.00	0.650

Calculations

$s_{cr,Na}$ [in.]	$c_{cr,Na}$ [in.]	A_{Na} [in.^{2}]	A_{Na0} [in.^{2}]	$\psi_{ed,Na}$	$\tau_{k,max}$ [psi]
20.553	10.276	422.41	422.41	1.000	1173

$\psi_{g,Na0}$	$\psi_{g,Na}$	$\psi_{ec1,Na}$	$\psi_{ec2,Na}$	$\psi_{p,Na}$	N_{a0} [lb]
1.000	1.000	1.000	1.000	1.000	14795

Results

N_a [lb]	ϕ_{bond}	$\phi_{seismic}$	$\phi_{nonductile}$	$\phi\, N_a$ [lb]	N_{ua} [lb]
14795	0.550	0.750	0.400	2441	2500

2500/2441 ≈ 1.024 < 1.05 ok

PROFIS Anchor (c) 2003-2009 Hilti AG, FL-9494 Schaan Hilti is a registered Trademark of Hilti AG, Schaan

Company: FRONTENAC ENGINEERING GROUP, INC.
Specifier: JJS
Address: 2725 SUTTON BLVD
Phone I Fax: 314.644.2200 |
E-Mail: joshs@fe-stl.com

3.3 Concrete Breakout Strength

$N_{cb} = \left(\frac{A_{Nc}}{A_{Nc0}}\right) \psi_{ed,N}\, \psi_{c,N}\, \psi_{cp,N}\, N_b$ ACI 318-08 Eq. (D-4)

$\phi\, N_{cb} \geq N_{ua}$ ACI 318-08 Eq. (D-1)

A_{Nc} see ACI 318-08, Part D.5.2.1, Fig. RD.5.2.1(b)

$A_{Nc0} = 9\, h_{ef}^2$ ACI 318-08 Eq. (D-6)

$\psi_{ec,N} = \left(\frac{1}{1 + \frac{2\, e_N}{3\, h_{ef}}}\right) \leq 1.0$ ACI 318-08 Eq. (D-9)

$\psi_{ed,N} = 0.7 + 0.3 \left(\frac{c_{a,min}}{1.5 h_{ef}}\right) \leq 1.0$ ACI 318-08 Eq. (D-11)

$\psi_{cp,N} = MAX\left(\frac{c_{a,min}}{c_{ac}}, \frac{1.5 h_{ef}}{c_{ac}}\right) \leq 1.0$ ACI 318-08 Eq. (D-13)

$N_b = k_c\, \lambda\, \sqrt{f'_c}\, h_{ef}^{1.5}$ ACI 318-08 Eq. (D-7)

Variables

h_{ef} [in.]	$e_{c1,N}$ [in.]	$e_{c2,N}$ [in.]	$c_{a,min}$ [in.]	$\psi_{c,N}$
9.000	0.000	0.000	∞	1.000

c_{ac} [in.]	k_c	λ	f'_c [psi]
22.487	17	1	4000

Calculations

A_{Nc} [in.^{2}]	A_{Nc0} [in.^{2}]	$\psi_{ec1,N}$	$\psi_{ec2,N}$	$\psi_{ed,N}$	$\psi_{cp,N}$	N_b [lb]
729.00	729.00	1.000	1.000	1.000	1.000	29030

Results

N_{cb} [lb]	$\phi_{concrete}$	$\phi_{seismic}$	$\phi_{nonductile}$	$\phi\, N_{cb}$ [lb]	N_{ua} [lb]
29030	0.650	0.750	0.400	5661	2500

Input data and results must be checked for agreement with the existing conditions and for plausibility!
PROFIS Anchor (c) 2003-2009 Hilti AG, FL-9494 Schaan Hilti is a registered Trademark of Hilti AG, Schaan

Company:	FRONTENAC ENGINEERING GROUP, INC.	Page:	5
Specifier:	JJS	Project:	PSC FERNLEY,
Address:	2725 SUTTON BLVD	Sub-Project I Pos. No.:	T-5/T-4 ANCHORS
Phone I Fax:	314.644.2200 |	Date:	6/26/2013
E-Mail:	joshs@fe-stl.com		

4 Shear load

	Load V_{ua} [lb]	Capacity ϕV_n [lb]	Utilization $\beta_V = V_{ua}/\phi V_n$	Status
Steel Strength*	N/A	N/A	N/A	N/A
Steel failure (with lever arm)*	N/A	N/A	N/A	N/A
Pryout Strength (Bond Strength controls)*	N/A	N/A	N/A	N/A
Concrete edge failure in direction **	N/A	N/A	N/A	N/A

* anchor having the highest loading **anchor group (relevant anchors)

5 Warnings

- To avoid failure of the anchor plate the required thickness can be calculated in PROFIS Anchor. Load re-distributions on the anchors due to elastic deformations of the anchor plate are not considered. The anchor plate is assumed to be sufficiently stiff, in order not to be deformed when subjected to the loading!
- Condition A applies when supplementary reinforcement is used. The Φ factor is increased for non-steel Design Strengths except Pullout Strength and Pryout strength. Condition B applies when supplementary reinforcement is not used and for Pullout Strength and Pryout Strength. Refer to your local standard.
- Design Strengths of adhesive anchor systems are influenced by the cleaning method. Refer to the INSTRUCTIONS FOR USE given in the Evaluation Service Report for cleaning and installation instructions
- The present version of the software does not account for adhesive anchor special design provisions corresponding to overhead applications. Refer to the ICC-ES Evaluation Service Report (e.g. section 4.1.1 of the ICC-ESR 2322) for details.
- Checking the transfer of loads into the base material and the shear resistance are required in accordance with ACI318 or the relevant standard!
- An anchor design approach for structures assigned to Seismic Design Category C, D, E or F is given in ACI 318-08 Appendix D, Part D.3.3.4 that requires the governing design strength of an anchor or group of anchors be limited by ductile steel failure. If this is NOT the case, Part D.3.3.5 requires that the attachment that the anchor is connecting to the structure shall be designed so that the attachment will undergo ductile yielding at a load level corresponding to anchor forces no greater than the controlling design strength. In lieu of D.3.3.4 and D.3.3.5, the minimum design strength of the anchors shall be multiplied by a reduction factor per D.3.3.6.
  An alternative anchor design approach to ACI 318-08, Part D.3.3 is given in IBC 2009, Section 1908.1.9. This approach contains "Exceptions" that may be applied in lieu of D.3.3 for applications involving "non-structural components" as defined in ASCE 7, Section 13.4.2.
  An alternative anchor design approach to ACI 318-08, Part D.3.3 is given in IBC 2009, Section 1908.1.9. This approach contains "Exceptions" that may be applied in lieu of D.3.3 for applications involving "wall out-of-plane forces" as defined in ASCE 7, Equation 12.11-1 or Equation 12.14-10.
- It is the responsibility of the user when inputting values for brittle reduction factors ($\phi_{nonductile}$) different than those noted in ACI 318-08, Part D.3.3.6 to determine if they are consistent with the design provisions of ACI 318-08, ASCE 7 and the governing building code.
  Selection of $\phi_{nonductile}$ = 1.0 as a means of satisfying ACI 318-08, Part D.3.3.5 assumes the user has designed the attachment that the anchor is connecting to undergo ductile yielding at a force level <= the design strengths calculated per ACI 318-08, Part D.3.3.3.

Fastening does not meet the design criteria! → SEE PAGE 3

DESIGN IS OK

PROFIS Anchor (c) 2003-2009 Hilti AG, FL-9494 Schaan Hilti is a registered Trademark of Hilti AG, Schaan

Company: FRONTENAC ENGINEERING GROUP, INC.
Specifier: JJS
Address: 2725 SUTTON BLVD
Phone I Fax: 314.644.2200 |
E-Mail: joshs@fe-stl.com

6 Installation data

Anchor plate, steel: -
Profile: no profile; 0.000 x 0.000 x 0.000 in.
Hole diameter in the fixture: d_f = 0.938 in.
Plate thickness (input): 0.313 in.
Recommended plate thickness: not calculated
Cleaning: Premium cleaning of the drilled hole is required

Anchor type and diameter: HIT-RE 500-SD + HAS B7, 7/8
Installation torque: 1500.000 in.lb
Hole diameter in the base material: 1.000 in.
Hole depth in the base material: 9.000 in.
Minimum thickness of the base material: 11.000 in.

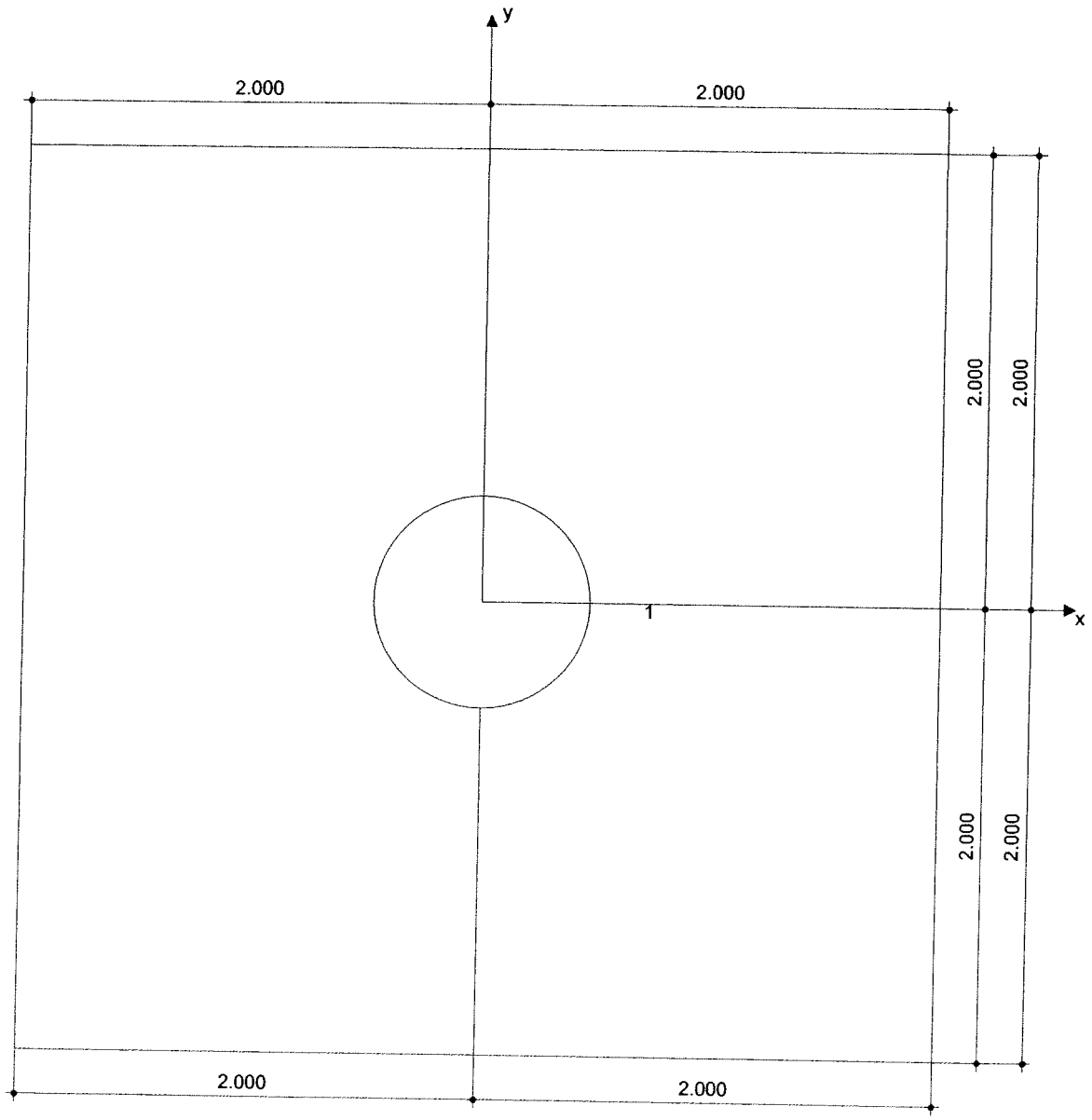

Coordinates Anchor in.

Anchor	x	y	c_{-x}	c_{+x}	c_{-y}	c_{+y}
1	0.000	0.000	-	-	-	-

Input data and results must be checked for agreement with the existing conditions and for plausibility!
PROFIS Anchor (c) 2003-2009 Hilti AG, FL-9494 Schaan Hilti is a registered Trademark of Hilti AG, Schaan

Company:	FRONTENAC ENGINEERING GROUP, INC.	Page:	7
Specifier:	JJS	Project:	PSC FERNLEY,
Address:	2725 SUTTON BLVD	Sub-Project I Pos. No.:	T-5/T-4 ANCHORS
Phone I Fax:	314.644.2200 |	Date:	6/26/2013
E-Mail:	joshs@fe-stl.com		

7 Remarks; Your Cooperation Duties

- Any and all information and data contained in the Software concern solely the use of Hilti products and are based on the principles, formulas and security regulations in accordance with Hilti's technical directions and operating, mounting and assembly instructions, etc., that must be strictly complied with by the user. All figures contained therein are average figures, and therefore use-specific tests are to be conducted prior to using the relevant Hilti product. The results of the calculations carried out by means of the Software are based essentially on the data you put in. Therefore, you bear the sole responsibility for the absence of errors, the completeness and the relevance of the data to be put in by you. Moreover, you bear sole responsibility for having the results of the calculation checked and cleared by an expert, particularly with regard to compliance with applicable norms and permits, prior to using them for your specific facility. The Software serves only as an aid to interpret norms and permits without any guarantee as to the absence of errors, the correctness and the relevance of the results or suitability for a specific application.
- You must take all necessary and reasonable steps to prevent or limit damage caused by the Software. In particular, you must arrange for the regular backup of programs and data and, if applicable, carry out the updates of the Software offered by Hilti on a regular basis. If you do not use the AutoUpdate function of the Software, you must ensure that you are using the current and thus up-to-date version of the Software in each case by carrying out manual updates via the Hilti Website. Hilti will not be liable for consequences, such as the recovery of lost or damaged data or programs, arising from a culpable breach of duty by you.

PROFIS Anchor (c) 2003-2009 Hilti AG, FL-9494 Schaan Hilti is a registered Trademark of Hilti AG, Schaan

FRONTENAC ENGINEERNIG GROUP, INC.
2725 Sutton Boulevard
St. Louis, Missouri 63143
Phone: (314) 644-2200
Fax: (314) 644-0645

JOB	PSC FERNLEY, NEVADA		TANK T-4 FOUNDATION DESIGN
SHEET NO.	1	OF	4
CALCULATED BY	JJS	DATE	6/26/2013
CHECKED BY	AKF	DATE	3/25/2013
SCALE			

COMBINED FOOTING ANALYSIS AND DESIGN (ACI318-05)

TEDDS calculation version 2.0.03.04

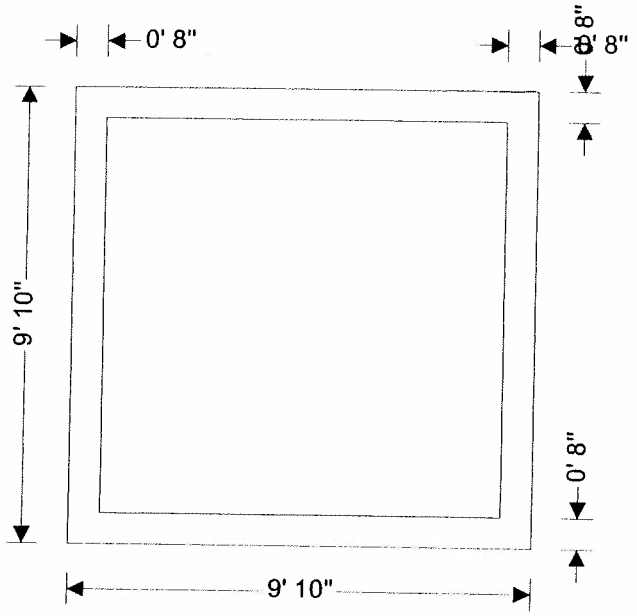

Combined footing details

Length of combined footing	L = **9.830** ft	Width of combined footing	B = **9.830** ft
Depth of combined footing	h = **6.000** in	Depth of soil over footing	h_{soil} = **0.000** in
Density of concrete	ρ_{conc} = **150.0** lb/ft^3		

Column details

Column base length	l_A = **102.000** in	Column base width	b_A = **102.000** in
Column eccentricity in x	e_{PxA} = **0.000** in	Column eccentricity in y	e_{PyA} = **0.000** in

Soil details

Depth of soil over footing	h_{soil} = **0.000** in	Density of soil	ρ_{soil} = **120.0** lb/ft^3
Allowable bearing pressure	$P_{bearing}$ = **1.500** ksf		

Axial loading on column

Dead axial load	P_{GA} = **44.500** kips	Live axial load	P_{QA} = **0.000** kips
Wind axial load	P_{WA} = **0.000** kips	Total axial load	P_A = **44.500** kips

Foundation loads

Dead surcharge load	F_{Gsur} = **0.000** ksf	Live surcharge load	F_{Qsur} = **0.000** ksf
Footing self weight	F_{swt} = **0.075** ksf		
Soil self weight	F_{soil} = **0.000** ksf	Total foundation load	F = **7.247** kips

Moment on column base

Dead moment in x direction	M_{GxA} = **0.000** kip_ft	Dead moment in y direction	M_{GyA} = **0.000** kip_ft
Live moment in x direction	M_{QxA} = **0.000** kip_ft	Live moment in y direction	M_{QyA} = **0.000** kip_ft

FRONTENAC ENGINEERNIG GROUP, INC.
2725 Sutton Boulevard
St. Louis, Missouri 63143
Phone: (314) 644-2200
Fax: (314) 644-0645

JOB	PSC FERNLEY, NEVADA		TANK T-4 FOUNDATION DESIGN
SHEET NO.	2	OF	4
CALCULATED BY	JJS	DATE	6/26/2013
CHECKED BY	AKF	DATE	3/25/2013
SCALE			

Wind moment in x direction M_{wxA} = **0.000** kip_ft — Wind moment in y direction M_{wyA} = **40.000** kip_ft (SEISMIC)

Total moment in x direction M_{xA} = **0.000** kip_ft — Total moment in y direction M_{yA} = **40.000** kip_ft

Check stability against overturning in y direction

Total overturning moment M_{yOT} = **40.000** kip_ft — Total restoring moment M_{yres} = **254.337** kip_ft

PASS - Restoring moment is greater than overturning moment in y direction

Calculate base reaction

Total base reaction T = **51.7** kips

Base reaction eccentricity in x e_{Tx} = **0.000** in — Base reaction eccentricity in y e_{Ty} = **9.276** in

Base reaction acts within middle third of base

Calculate base pressures

q_1 = **0.283** ksf — q_2 = **0.788** ksf — q_3 = **0.283** ksf — q_4 = **0.788** ksf

Minimum base pressure q_{min} = **0.283** ksf — Maximum base pressure q_{max} = **0.788** ksf

PASS - Maximum base pressure is less than allowable bearing pressure

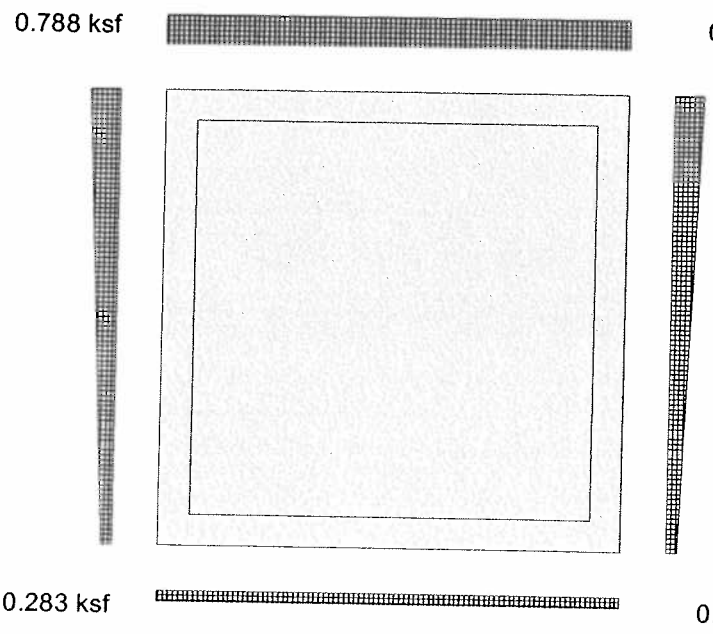

Load combination factors for loads

Dead loads γ_{fG} = **0.90** — Live loads γ_{fQ} = **0.00**

Wind loads γ_{fW} = **1.60**

Strength reduction factors

Flexural strength reduction ϕ_f = **0.90** — Shear strength reduction ϕ_s = **0.75**

Ultimate axial loading on column

Ultimate axial load on column P_{uA} = **40.050** kips

Ultimate foundation loads

Ultimate foundation load F_u = **6.522** kips

FRONTENAC ENGINEERNIG GROUP, INC.
2725 Sutton Boulevard
St. Louis, Missouri 63143
Phone: (314) 644-2200
Fax: (314) 644-0645

JOB	PSC FERNLEY, NEVADA		TANK T-4 FOUNDATION DESIGN
SHEET NO.	3	OF	4
CALCULATED BY	JJS	DATE	6/26/2013
CHECKED BY	AKF	DATE	3/25/2013
SCALE			

Ultimate horizontal loading on column

Ult.horizontal load in x dir H_{xuA} = **0.000** kips — Ult. horizontal load in y dir H_{yuA} = **0.000** kips

Ultimate moment on column

Ult.moment on column in x dir M_{xuA} = **0.000** kip_ft — Ult.moment on column in y dir M_{yuA} = **64.000** kip_ft

Ultimate base reaction

Ultimate base reaction T_u = **46.572** kips

Ecc.of ult.base reaction in x e_{Txu} = **0.000** in — Ecc.of ult.base reaction in y e_{Tyu} = **16.490** in

Calculate ultimate base pressures

q_{1u} = **0.078** ksf — q_{2u} = **0.886** ksf — q_{3u} = **0.078** ksf — q_{4u} = **0.886** ksf

Minimum ult.base pressure q_{minu} = **0.078** ksf — Maximum ult.base pressure q_{maxu} = **0.886** ksf

Ultimate moments

Ultimate moment in x dir M_x = **49.211** kip_ft — Ultimate moment in y dir M_y = **81.211** kip_ft

Material details

Comp.strength of concrete f'_c = **4000** psi — Yield strength of reinforcement f_y = **60000** psi

Cover to reinforcement c_{nom} = **1.000** in

Moment design in x direction

Tens.reinforcement provided **11 No. 6 bars btm**

Area of tens.reinforcement $A_{s\_xB\_prov}$ = **4.860** in^2 — Minimum tens.reinforcement $A_{s\_x\_min}$ = **1.274** in^2

PASS - Tension reinforcement provided exceeds minimum tension reinforcement required

Strain in reinforcement ε_{t_x} = **0.01059**

PASS - The section has adequate ductillty (cl. 10.3.5)

Nominal moment strength M_{nx} = **54.679** kip_ft — Moment capacity of base M_{capx} = **85.323** kip_ft

PASS - Moment capacity of base exceeds nominal moment strength required

Moment design in y direction

Tens.reinforcement provided **11 No. 6 bars btm**

Area of tens.reinforcement $A_{s\_yB\_prov}$ = **4.860** in^2 — Minimum tens.reinforcement $A_{s\_y\_min}$ = **1.274** in^2

PASS - Tension reinforcement provided exceeds minimum tension reinforcement required

Strain in reinforcement ε_{t_y} = **0.01322**

PASS - The section has adequate ductility (cl. 10.3.5)

Nominal moment strength M_{ny} = **90.235** kip_ft — Moment capacity of base M_{capy} = **103.547** kip_ft

PASS - Moment capacity of base exceeds nominal moment strength required

Calculate ultimate shear force at d from face of column

Ult.pressure for shear q_{su} = **0.875** ksf

Area loaded for shear A_s = **2.748** ft^2 — Ult.shear force V_{su} = **2.219** kips

Shear design at distance d from face of column

Nominal shear strength V_{nsu} = **2.958** kips — Concrete shear strength V_{c_s} = **69.009** kips

PASS - Nominal shear strength is less than concrete shear strength

Calculate ultimate punching shear force at perimeter of d / 2 from face of column

Ult.press.for punching shear q_{puA} = **0.482** ksf — Avg.effective reinf.depth d = **4.250** in

Area loaded A_{pA} = **78.396** ft^2 — Length of shear perimeter u_{pA} = **35.417** ft

FRONTENAC ENGINEERNIG GROUP, INC.
2725 Sutton Boulevard
St. Louis, Missouri 63143
Phone: (314) 644-2200
Fax: (314) 644-0645

JOB	PSC FERNLEY, NEVADA		TANK T-4 FOUNDATION DESIGN
SHEET NO.	4	OF	4
CALCULATED BY	JJS	DATE	6/26/2013
CHECKED BY	AKF	DATE	3/25/2013
SCALE			

Ult.punching shear force V_{puA} = **7.557** kips

Punching shear stresses at perimeter of d / 2 from face of column

Nominal shear strength V_{npuA} = **10.076** kips Concrete shear strength V_{c_p} = **274.169** kips

PASS - Nominal shear strength is less than concrete shear strength

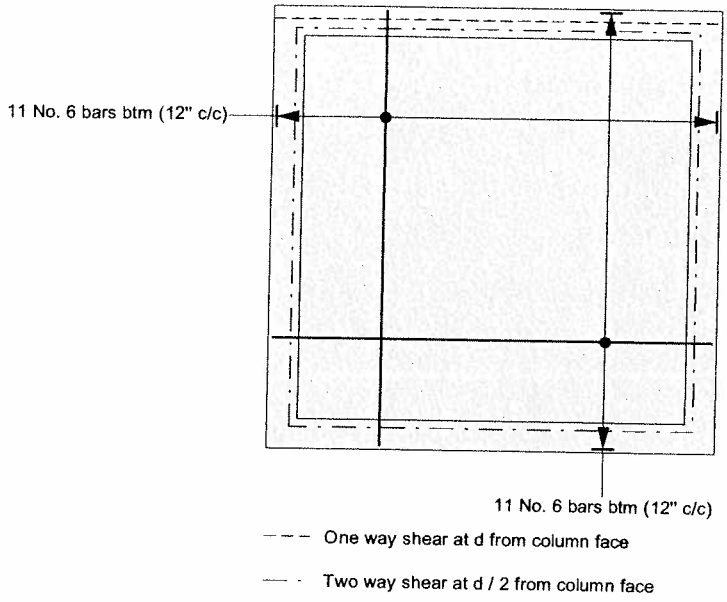

15 / TS12 MIXER SUPPORT BEAM DETAIL

SCALE: 1/2"=1'-0"

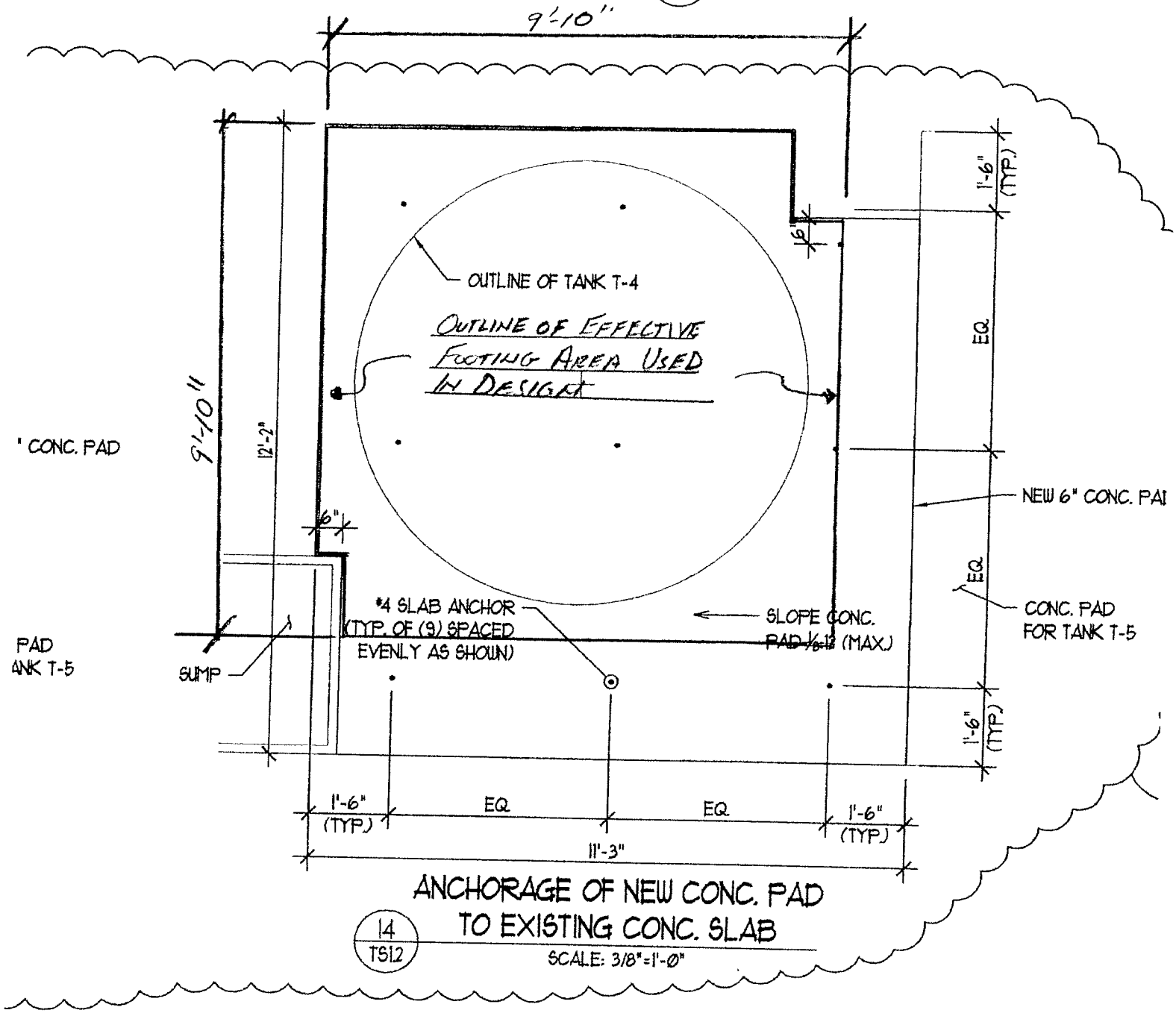

14 / TS12 ANCHORAGE OF NEW CONC. PAD TO EXISTING CONC. SLAB

SCALE: 3/8"=1'-0"

TANK INSPECTION FORM

OWNER: Philip Services Corporation / 21 EMI
PSC Fernley Facility
2095 Newlands Drive East
Fernley, NV 89408
(775)575-2760

TANK NO.: T-4

TANK SHELL INSPECTION

Date Inspected: June 10, 2013

Findings: Multiple Scraps on South Side. Smaller Scraps on West side & around Manway opening.

TANK ANCHORAGE STRUCTURAL OBSERVATION / Tank Pad - 7" high

Type of Anchorage System: Steel Chair w/ (1) Epoxy Anchor per Chair

Date Inspected: June 10, 2013

# of Anchor Plates: 9

AB Type, Diameter and Number/plate: Epoxy, 7/8" ø, 1 per Chair

Size of Anchor Plate & Contact with Tank: Welded to Shell

Special Inspection Completed? Yes

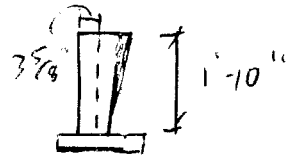

Side View

TANK LEAKAGE TEST

Date Filled: June 13, 2013 — Water Level below Inspection Hatch: 9" (Top of Tank)

Date of Re-inspection: June 14, 2013 — Water Level below Inspection Hatch: 9"

Shell Leakage? No / No

Leakage on Floor/Drain Pan at Manifold? No / No

INSPECTOR: Brian Gill — **DATE:** June 10, 2013

INSPECTOR: Brian Gill — **DATE:** June 13, 2013
June 14, 2013

PROCESS PIPING INSPECTION FORM

Philip Services Corporation / 21 EMI
PSC Fernley Facility
2095 Newlands Drive East
Fernley, NV 89408
(775)575-2760

Tank Number: T-4

Date Inspected: June 14, 2013

Fill Line Assembly:

Number of Fill Line Assemblies: 3 Fill Line Assemblies

Description: Two fill line assemblies were on top of the tank and one fill line assembly was on the side of the tank near the top. The fill lines consisted of bulkhead fittings connected to the tank and temporary pipes connected to the bulkhead fittings. The bulkhead fitting were the only permanent piping at the time of the inspection. There was no damage to the process piping connection or to the tank shell. No evidence of leaking found. The permanent piping is secured and stable.

Discharge Line Assembly:

Number of Discharge Line Assemblies: 2 Discharge Line Assemblies

Description: The discharge line assemblies consisted of bulkhead fittings connected to the tank and temporary pipes connected to the bulkhead fittings. The bulkhead fittings are the only permanent piping in the discharge line assembly. There was no damage to the process piping connection or to the tank shell. No evidence of leaking found. The permanent piping is secured and stable.

INSPECTOR: Brian [signature] **DATE:** June 14, 2013

NORTECH Geotechnical/Civil Consultants, Ltd.

FIELD CONSTRUCTION INSPECTION REPORT

PROJECT PSC Environmental JOB NO. 14441-28C

LOCATION 2095 Newlands Drive, Fernley, Nevada REPORT NO. 12

CONTRACTOR L & H Concrete WEEK ENDING 05-18-13

Work Description

May 15 - On site for epoxy inspection on vertical rebar dowels for tank slab (T4). Holes were drilled to proper embed depth (4 inches) and were cleaned out thoroughly. Epoxy and dowels (vertical) were placed in accordance with structural details on sheet TS1.2 on approved plans. I also inspected epoxy and anchor bolts for tank pad 307 for cat walk. Holes were drilled to proper embed depth (5 inches) and cleaned out thoroughly. Bolts (½ inch) and epoxy were placed in accordance with structural details on sheet DWC 5.0 on approved plans. (MSV)

May 16 - Inspected steel reinforcement in slab for tank 4. Rebar has been placed in accordance with details from sheet TS1.2 on approved plans. I remained on site for concrete pour of the T4 slab. I sampled concrete and performed one passing slump test and cast one set of four cylinders. Temperature of the 4000 psi mix was 66 degrees. Cylinders have been stored in a cure box for initial curing and over night protection. NOTE: Contractor added one gallon of plasticizer to 3-1/2 yard load for workability. (MEV)

May 17 - Inspected placement of 32 1\2" x 4" embedment all thread anchor bolts at seismic plate to slab connections at tank 6. Contractor has drilled holes to proper embed depths and has cleaned holes thoroughly with an air compressor and brush (wire). I observed placement of bolts and epoxy. Project was completed in accordance with detail 5/TA1.0 on approved plans. I also inspected welding of seismic plate to tank and seismic plate to continuity plate connections (16 locations) at tank 6. Welding has been completed in accordance with detail 4/TA1.0 on approved plans and AWS specifications. (MEV)

NORTECH
GEOTECHNICAL/CIVIL CONSULTANTS LTD.
300 Western Road, #3, Reno, NV 89506 • (775) 852-7475 FAX (775) 852-7438

REPORT OF CONCRETE CYLINDER TEST

Project Number: 14441-28C
Report Number: 7
Project: PSC Environmental
Client: Equipment Pro, Inc.
Address: 721 Parkwood Dr., Ste. Genevieve, MO 63670

Attn:

FIELD TEST CONDITIONS AND RESULTS (ASTM C31)

Date Placed: 5/16/2013
Time Sampled: 11:30 AM
Location of Sample: T4 Slab
Supplier: 3D
Truck Number: 480
Ticket Number: 44566
Mix Number: 1230CT
Design Strength: 4000 psi
Time Batched: 10:37 AM
Time Placed: 11:30 AM
Batch Size: 3.5 yds.
Slump: 5 in. (ASTM C 143)
Air Content: N/A % (ASTM C 173)
Concrete Temp: 66 °F
Ambient Temp: 65 °F
Water Added: Plasticizer, 1 gal.
Technician: MEV

LABORATORY TEST RESULTS (ASTM C39)

Specimen	Test Date	Age	Load	Diameter	Area	Strength	Percent of Design	Type of Fracture
764	5/23/2013	7	32540	4.00	12.57	2590		1
765	6/13/2013	28	52140	4.00	12.57	4150	104%	1
766	6/13/2013	28	53410	4.00	12.57	4250	106%	1
767		0		4.00	12.57			

Remarks:

TYPES OF FRACTURE

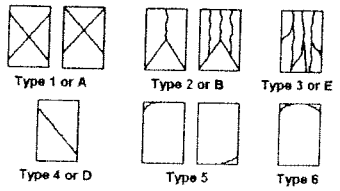

Copies to:

Reported by:
Kent Seegmiller
Concrete Laboratory Manager

NORTECH Geotechnical/Civil Consultants, Ltd.

FIELD CONSTRUCTION INSPECTION REPORT

PROJECT PSC Environmental JOB NO. 14441-28C

LOCATION 2095 Newlands Drive, Fernley, Nevada REPORT NO. 14

CONTRACTOR L & H Concrete WEEK ENDING 06-08-13

Work Description

June 7 - Inspected placement of 9 - one inch* epoxy set all thread anchor bolts at tank 4 plate to slab connections. Contractor has drilled holes to proper embed depths and has thoroughly cleaned holes with air compressor and wire brush. I observed placement of bolts and epoxy (Hilti RE 500 SD as required). Project was completed in accordance with detail 12.TS1.2 on approved plans. (MEV)

* 7/8 inch dia. specified on plans

ESTABLISHED 1980
PRESIDENTS
1980 - 1991 HRINSIN, JOHN A.
1992 - BERTHOLD, WILLIAM K.

FRONTENAC ENGINEERING
CIVIL/STRUCTURAL
LAND SURVEYING

June 27, 2013

Mr. Jim Dailey
Equipment Pro Inc.
721 Parkwood Drive
St. Genevieve, MO
573.883.2373

RE: Phase III Tank T-4 – Tank Inspection Certification
FEG Job No. 13255

Dear Jim,

Pursuant to your request, Frontenac Engineering Group, Inc. has conducted a visual inspection of the T-4 tank which is to be utilized at PSC Environmental Services, LLC, in Fernley, Nevada. The inspection was conducted per Section 8.5 of the API 650. The purpose of our inspection was to determine if the tank was constructed per the construction documents provided by Frontenac Engineering Group, Inc., which were developed per the eleventh edition of the API 650.

From our inspection of the tank, we have determined that the tank was constructed per the construction documents and, therefore, is in compliance with API 650 design. Also, we found that the condition of the welds were in compliance with the undercut, surface porosity, and reinforcement parameters of API 650, Section 8.5.

Please feel free to contact me with any questions or comments.

Thank you,

Joshua J. Schmitz
Joshua J. Schmitz, P.E.
Structural Engineer

PROFESSIONAL ENGINEER-STATE OF NEVADA
WILLIAM K. BERTHOLD
Exp. 12/31/14
CIVIL
No. 22305
6/27/13

tobey wade
STRUCTURAL ENGINEERS

August 7, 2013
Project No. R405-13-13

Ms. Tracy Buono
Facility/Operations Manager
PSC FERNLEY FACILITY
2095 Newlands Drive East
Fernley, NV 89408

RE: TANK T-4 CERTIFICATION

Dear Ms. Buono:

In accordance with the Fernley Facility Amended Tank Replacement Plan dated December 17, 2012, and Appendix D-6 of the pending July 2012 RECRA Permit, each new tank is required to be certified by Independent Registered Professional Engineers (IRPE's) prior to being placed into service. This letter has been prepared to document the evaluation of Tank T-4 as performed by Tobey-Wade Consulting.

Background

Tank T-4 is a welded structural steel tank with a working capacity of 3,750 gallons. Frontenac Engineering designed the tank shell and conducted a structural evaluation to determine the foundation requirements under static and dynamic (seismic) loads. Frontenac Engineering also conducted a stability analysis and designed anchorage for the tank. A copy of their calculations is attached.

Certification of the tank liner's compatibility with the proposed waste stream has been provided by others.

Findings

Based on our evaluation, the following systems are hereby certified as being in compliance with the Amended Tank Replacement plan:

- Tank T-4 has sufficient strength to contain the proposed waste materials without rupturing based on the design analysis performed by Frontenac Engineering.

- Tank T-4 will be situated on a reinforced concrete foundation system which is capable of adequately supporting the tank and its contents under static and dynamic conditions based on the design analysis performed by Frontenac Engineering.

- Tank T-4 will be located in an area with sufficient secondary containment as required by 40 CFR Ch. I, 264.193.

- Tank T-4 is anchored to resist overturning when subjected to site-specific 2006 International Building Code level seismic events based on the design analysis performed by Frontenac Engineering.

- Tank T-4 is anchored to prevent sliding when subjected to site-specific 2006 International Building Code level seismic events based on the design analysis performed by Frontenac Engineering.

- Tank T-4 has been subjected to a 24-hour leak test and found to be watertight. The Tank Leakage Test results are included in the Tank Inspection Form, copy attached.

- The exterior of Tank T-4's shell wall has been inspected and found to be undamaged, other than for minor scrapes. The Tank Shell Inspection results are included in the Tank Inspection Form, copy attached.

- The process piping fill and discharge connections have been inspected and found to be undamaged and with no evidence of leakage. The piping connections are adequately attached to the tank to prevent displacement during an earthquake. The associated Process Piping inspection form is attached.

- Special Inspection of the new foundation slab and the tank anchor bolt installation was performed as required by the International Building Code. Copies of the Special Inspection reports are attached. The tank shell welding was inspected by Frontenac Engineering and found to meet code requirements. A copy of their inspection report is attached.

Tobey-Wade Consulting witnessed the tank leakage test and conducted the tank shell inspection, under my direct supervision. Special Inspections were performed by inspectors from Nortech Consultants based on anchorage requirements provided by Frontenac Engineering.

Certification Statement

I certify under penalty of law that this report and all attachments were prepared under my direction and supervision in accordance with a system developed to assure that qualified personnel properly gather and evaluate the information submitted. Based on my inquiry of the person or persons who manage the system or those persons directly responsible for gathering the information, the information, submitted is, to the best of my knowledge and belief, true, accurate, and complete. I am aware that there are significant penalties for submitting false information, including the possibility of fines and imprisonment for knowing violations.

This report has been prepared in accordance with accepted engineering practices and is subject to the assumptions and limitations stated in the report. Also note that this certification covers the aforementioned aspects of Tank T-4 only.

Please feel free to contact me at your convenience should you have any questions relating to our findings.

Sincerely,
TOBEY-WADE CONSULTING

Terrence R. Tobey

TERRENCE R. TOBEY, P.E., S.E.
Principal Structural Engineer

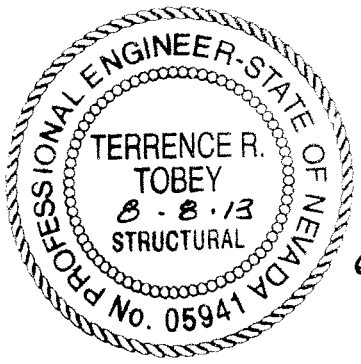

Exp. 6.30.14

TANK INSPECTION FORM

OWNER: Philip Services Corporation / 21 EMI
PSC Fernley Facility
2095 Newlands Drive East
Fernley, NV 89408
(775)575-2760

TANK NO.: T-4

TANK SHELL INSPECTION

Date Inspected: June 10, 2013

Findings: Multiple Scraps on South Side. Smaller Scraps on West side & around Manway opening.

TANK ANCHORAGE STRUCTURAL OBSERVATION / Tank Pad - 7" high

Type of Anchorage System: Steel Chair w/ (1) Epoxy Anchor per Chair

Date Inspected: June 10, 2013

# of Anchor Plates: 9

AB Type, Diameter and Number/plate: Epoxy, 7/8" ø, 1 per Chair

Size of Anchor Plate & Contact with Tank: Welded to Shell

Special Inspection Completed? Yes

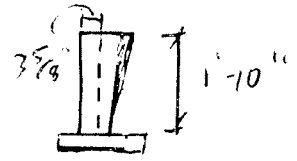

Side View

TANK LEAKAGE TEST

Date Filled: June 13, 2013

Water Level below Inspection Hatch: 9" (Top of Tank)

Date of Re-inspection: June 14, 2013

Water Level below Inspection Hatch: 9"

Shell Leakage? No / No

Leakage on Floor/Drain Pan at Manifold? No / No

INSPECTOR: Brian Gill **DATE:** June 10, 2013

INSPECTOR: Brian Gill **DATE:** June 13, 2013
June 14, 2013

PROCESS PIPING INSPECTION FORM

Philip Services Corporation / 21 EMI
PSC Fernley Facility
2095 Newlands Drive East
Fernley, NV 89408
(775)575-2760

Tank Number: T-4

Date Inspected: June 14, 2013

Fill Line Assembly:

Number of Fill Line Assemblies: 3 Fill Line Assemblies

Description: Two fill line assemblies were on top of the tank and one fill line assembly was on the side of the tank near the top. The fill lines consisted of bulkhead fittings connected to the tank and temporary pipes connected to the bulkhead fittings. The bulkhead fitting were the only permanent piping at the time of the inspection. There was no damage to the process piping connection or to the tank shell. No evidence of leaking found. The permanent piping is secured and stable.

Discharge Line Assembly:

Number of Discharge Line Assemblies: 2 Discharge Line Assemblies

Description: The discharge line assemblies consisted of bulkhead fittings connected to the tank and temporary pipes connected to the bulkhead fittings. The bulkhead fittings are the only permanent piping in the discharge line assembly. There was no damage to the process piping connection or to the tank shell. No evidence of leaking found. The permanent piping is secured and stable.

INSPECTOR: Brian Gill **DATE:** June 14, 2013

NORTECH Geotechnical/Civil Consultants, Ltd.

FIELD CONSTRUCTION INSPECTION REPORT

PROJECT PSC Environmental JOB NO. 14441-28C

LOCATION 2095 Newlands Drive, Fernley, Nevada REPORT NO. 12

CONTRACTOR L & H Concrete WEEK ENDING 05-18-13

Work Description

May 15 - On site for epoxy inspection on vertical rebar dowels for tank slab (T4). Holes were drilled to proper embed depth (4 inches) and were cleaned out thoroughly. Epoxy and dowels (vertical) were placed in accordance with structural details on sheet TS1.2 on approved plans. I also inspected epoxy and anchor bolts for tank pad 307 for cat walk. Holes were drilled to proper embed depth (5 inches) and cleaned out thoroughly. Bolts (½ inch) and epoxy were placed in accordance with structural details on sheet DWC 5.0 on approved plans. (MSV)

May 16 - Inspected steel reinforcement in slab for tank 4. Rebar has been placed in accordance with details from sheet TS1.2 on approved plans. I remained on site for concrete pour of the T4 slab. I sampled concrete and performed one passing slump test and cast one set of four cylinders. Temperature of the 4000 psi mix was 66 degrees. Cylinders have been stored in a cure box for initial curing and over night protection. NOTE: Contractor added one gallon of plasticizer to 3-1/2 yard load for workability. (MEV)

May 17 - Inspected placement of 32 1\2" x 4" embedment all thread anchor bolts at seismic plate to slab connections at tank 6. Contractor has drilled holes to proper embed depths and has cleaned holes thoroughly with an air compressor and brush (wire). I observed placement of bolts and epoxy. Project was completed in accordance with detail 5/TA1.0 on approved plans. I also inspected welding of seismic plate to tank and seismic plate to continuity plate connections (16 locations) at tank 6. Welding has been completed in accordance with detail 4/TA1.0 on approved plans and AWS specifications. (MEV)

NORTECH
GEOTECHNICAL & CIVIL CONSULTANTS LTD.
300 Western Road, #3, Reno, NV 89506 • (775) 852-7475 FAX (775) 852-7468

REPORT OF CONCRETE CYLINDER TEST

Project Number: 14441-28C
Report Number: 7
Project: PSC Environmental
Client: Equipment Pro, Inc.
Address: 721 Parkwood Dr., Ste. Genevieve, MO 63670

Attn:

FIELD TEST CONDITIONS AND RESULTS (ASTM C31)

Date Placed: 5/16/2013
Time Sampled: 11:30 AM
Location of Sample: T4 Slab
Supplier: 3D
Truck Number: 480
Mix Number: 1230CT
Design Strength: 4000 psi
Time Batched: 10:37 AM
Batch Size: 3.5 yds.
Slump: 5 in. (ASTM C 143)
Concrete Temp: 66 °F
Water Added: Plasticizer, 1 gal.

Ticket Number: 44566

Time Placed: 11:30 AM

Air Content: N/A % (ASTM C 173)
Ambient Temp: 65 °F
Technician: MEV

LABORATORY TEST RESULTS (ASTM C39)

Specimen	Test Date	Age	Load	Diameter	Area	Strength	Percent of Design	Type of Fracture
764	5/23/2013	7	32540	4.00	12.57	2590		1
765	6/13/2013	28	52140	4.00	12.57	4150	104%	1
766	6/13/2013	28	53410	4.00	12.57	4250	106%	1
767		0		4.00	12.57			

Remarks:

Copies to:

TYPES OF FRACTURE

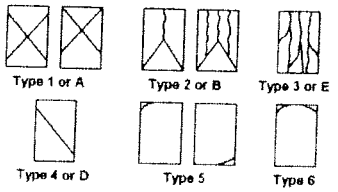

Reported by:
Kent Seegmiller
Concrete Laboratory Manager

NORTECH Geotechnical/Civil Consultants, Ltd.

FIELD CONSTRUCTION INSPECTION REPORT

PROJECT PSC Environmental JOB NO. 14441-28C

LOCATION 2095 Newlands Drive, Fernley, Nevada REPORT NO. 14

CONTRACTOR L & H Concrete WEEK ENDING 06-08-13

Work Description

June 7 - Inspected placement of 9 - one inch* epoxy set all thread anchor bolts at tank 4 plate to slab connections. Contractor has drilled holes to proper embed depths and has thoroughly cleaned holes with air compressor and wire brush. I observed placement of bolts and epoxy (Hilti RE 500 SD as required). Project was completed in accordance with detail 12.TS1.2 on approved plans. (MEV)

* 7/8 inch dia. specified on plans

Tank Data Sheet

RCRA Regulated? YES

Tank Location: DETOX ROOM

Tank Name: TREATMENT TANK

Tank Numbers: T-4, T-5

Process Description: NEUTRALIZATION, OXIDIZER, CYANIDE/SULFIDE TREATMENT

Vessel Fluid: AQUEOUS-BASED WASTE LIQUIDS

Specific Gravity: <1.25

Freeboard At Working Vol (ft cubed): 1' - 0"

Normal Operating Pressure: ATMOSPHERIC

Temperature (F°) AMBIENT

	Material	Thickness	Type
Bottom	CARBON STEEL PLATE	5/16" NOMINAL	FLAT
Shell	CARBON STEEL PLATE	5/16" NOMINAL	CYLINDRICAL-VERTICAL
Roof	CARBON STEEL PLATE	5/16" NOMINAL	SELF-SUPPORTING CONE

Working Volume (USG): 3,750 GALLONS

Nominal Volume (USG): 4,175 GALLONS

Tank I.D. (ft): 8' - 6"

Design Code Used: API 650.10TH EDITION

Insulation: NONE

Method of Construction: WELDED STEEL

Tank Height or Length (ft): 9' - 10"

Date In Service: TBD

Anchorage: BOLTED TO CONCRETE. Anchorage designs per 2006 IBC.

Connections:

Item No:	Size (In.)	Gasket	Description
1	24"		SIDE MANWAY
2	4"		SIDE FLANGE NOZZLE (2)
3	24"		ROOF MANWAY
4	8"		MIXER FLANGE NOZZLE
5	8"		VENT FLANGE NOZZLE
6	4"		FLANGE NOZZLE
7	3"		FLANGE NOZZLE
8	2"		FLANGE NOZZLE
9	1 1/4"		FLANGE NOZZLE (6)
10			BAFFLES (4)
11			
12			
13			
14			
15			

Tank Sketch:

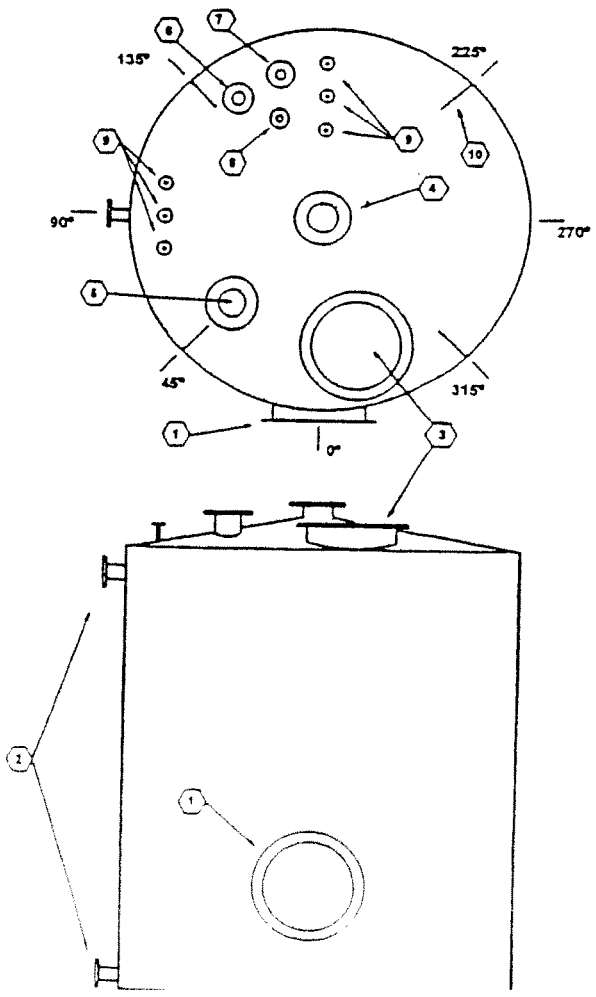

Interior Coating: VersaFlex LC-25 Lock Coat, VT-40 Finish Coat, FSS50 DM Spray Polyurea

Exterior Coating: Basecoat epoxy, Topcoat Polyurethane enamel

Tank Mfger: Frontenac Engineering

Remarks:

tobey wade
STRUCTURAL ENGINEERS

April 4, 2013
Project No. R405-06-13

Ms. Tracy Buono
Facility/Operations Manager
PSC FERNLEY FACILITY
2095 Newlands Drive East
Fernley, NV 89408

RE: TANK T-5 INTERIM CERTIFICATION

Dear Ms. Buono:

In accordance with the Fernley Facility Amended Tank Replacement Plan dated December 17, 2012, and Appendix D-6 of the pending July 2012 RECRA Permit, each new tank is required to be certified by Independent Registered Professional Engineers (IRPE's) prior to being placed into service. This letter has been prepared to document the evaluation of Tank T-5 as performed by Tobey-Wade Consulting.

It should be noted that Tank T-5 currently has permanent bulkhead fittings with valves for connection of temporary fill and discharge lines. The permanent process piping servicing Tank T-5 will be installed in Phase 3 as outlined in the above-referenced documents. Accordingly, this certification is being provided as an interim certification. Final certification of Tank T-5 will be provided after the permanent piping and all other associated permanent systems have been installed and inspected.

Background

Tank T-5 is a welded structural steel tank with a working capacity of 3,750 gallons.

Frontenac Engineering designed the tank shell and conducted a structural evaluation to determine the foundation requirements under static and dynamic (seismic) loads. Frontenac Engineering also conducted a stability analysis and designed anchorage for the tank.

Certification of the tank liner's compatibility with the proposed waste stream has been provided by others.

NEVADA OFFICE
648 LANDER STREET ■ RENO, NEVADA 89509 ■ TEL: (775) 324.7757 ■ FAX: (775) 324.7797

Findings

Based on our evaluation, the following systems are hereby certified as being in compliance with the Amended Tank Replacement plan:

- Tank T-5 has sufficient strength to contain the proposed waste materials without rupturing based on the calculations performed by Frontenac Engineering.
- Tank T-5 will be situated on a reinforced concrete foundation system which is capable of adequately supporting the tank and its contents under static and dynamic conditions based on the calculations performed by Frontenac Engineering.
- Tank T-5 will be located in an area with sufficient secondary containment as required by 40 CFR Ch. I, 264.193.
- Tank T-5 is anchored to resist overturning when subjected to site-specific 2006 International Building Code level seismic events based on the calculations performed by Frontenac Engineering.
- Tank T-5 is anchored to prevent sliding when subjected to site-specific 2006 International Building Code level seismic events based on the calculations performed by Frontenac Engineering.
- The process piping fill and discharge connections have been inspected and found to be undamaged and with no evidence of leakage. The piping connections are adequately attached to the tank to prevent displacement during an earthquake. The associated Process Piping inspection form is attached.
- Special Inspection of the epoxy anchor bolt installation was performed as required by the International Building Code. Copies of the Special Inspection reports are attached.
- Tank T-5 has been subjected to a 24-hour leak test and found to be watertight. The Tank Leakage Test results are included in the Tank Inspection Form, copy attached.
- The exterior of Tank T-5's shell wall has been inspected and found to be undamaged. The Tank Shell Inspection results are included in the Tank Inspection Form, copy attached.

Tobey-Wade Consulting witnessed the tank leakage test and conducted the tank shell inspection, under my direct supervision. Special Inspections were performed by inspectors from Nortech Consultants based on anchorage requirements provided by Frontenac Engineering.

Certification Statement

I certify under penalty of law that this report and all attachments were prepared under my direction and supervision in accordance with a system developed to assure that qualified personnel properly gather and evaluate the information submitted. Based on my inquiry of the person or persons who manage the system or those persons directly responsible for gathering the information, the information, submitted is, to the best of my knowledge and belief, true, accurate, and complete. I am aware that there are significant penalties for submitting false information, including the possibility of fines and imprisonment for knowing violations.

This report has been prepared in accordance with acceptable engineering practices and is subject to the assumptions and limitations stated in the report. Also note that this certification covers the aforementioned aspects of Tank T-5 only.

Please feel free to contact me at your convenience should you have any questions relating to our findings.

Sincerely,
TOBEY-WADE CONSULTING

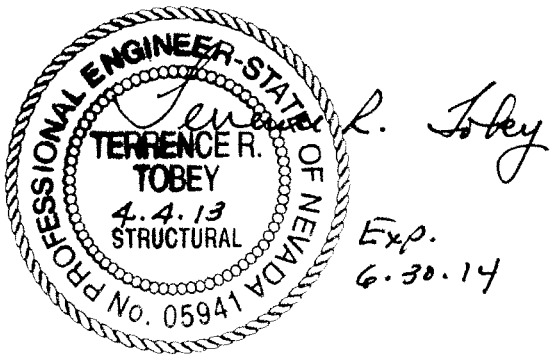

TERRENCE R. TOBEY, P.E., S.E.
Principal Structural Engineer

TANK INSPECTION FORM

OWNER: Philip Services Corporation / 21 EMI
PSC Fernley Facility
2095 Newlands Drive East
Fernley, NV 89408
(775)575-2760

TANK NO.: T-5

TANK SHELL INSPECTION

Date Inspected: February 26, 2013

Findings: Paint has numerous scrapes on rear (S.) side & smaller scrapes on east side

TANK ANCHORAGE STRUCTURAL OBSERVATION / Tank Pad 7" high

Type of Anchorage System: steel chair w/ (1) epoxy anchor/chair

Date Inspected: February 26, 2013

# of Anchor Plates: 9

AB Type, Diameter and Number/plate: epoxy, 7/8" ϕ, 1 per chair

Plate Contact with Tank: welded to shell

Special Inspection Completed? Yes per Mat

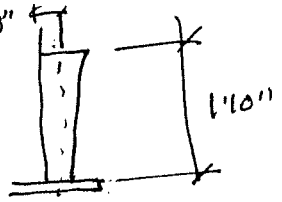

TANK LEAKAGE TEST

Date Filled: February 26, 2013, 2:30 pm

Water Level below Inspection Hatch: 13 3/16" below lower edge

Date of Re-inspection: 2/27/13

Water Level below Inspection Hatch: 13 3/16

Shell Leakage? No, No

Leakage on Floor/Drain Pan at Manifold? No, No

INSPECTOR: Terrence Tobey **DATE:** ~~##~~ Feb. 26, 2013

INSPECTOR: Brian Ellis **DATE:** 2/27/2013

NORTECH Geotechnical/Civil Consultants, Ltd.

FIELD CONSTRUCTION INSPECTION REPORT

PROJECT PSC Environmental JOB NO. 14441-28C

LOCATION 2095 Newlands Drive, Fernley, Nevada REPORT NO. 3

CONTRACTOR L & H Concrete WEEK ENDING 01-26-13

Work Description

January 21 - Inspected steel reinforcement in tank slabs (T-5 & 307). Rebar was placed in accordance with structural details on approved plans. I performed epoxy inspection of rebar dowel hooks (#3's) in tank slab. Holes were drilled to proper embed depth (4") and cleaned out thoroughly. Epoxy and dowels were placed in accordance with structural details on approved plans, I was on site for concrete pour on tank slabs and I cast one set of concrete cylinders and I performed one slump test. (MSV)

January 22 - Transported previously cast cylinders to the laboratory for testing. (MSV)

GEOTECHNICAL/CIVIL CONSULTANTS, LTD.

REPORT OF CONCRETE CYLINDER TEST

Project Number: 14441-28C
Report Number: 4
Project: PSC Environmental
Client: Equipment Pro, Inc.
Address: 721 Parkwood Dr., Ste. Genevieve, MO 63670

Attn:

FIELD TEST CONDITIONS AND RESULTS (ASTM C31)

Date Placed: 1/21/2013
Time Sampled: 8:40 AM
Location of Sample: Tank Slabs, T-5 and 307
Supplier: 3D
Truck Number: 482
Ticket Number: 36034
Mix Number: 1126RP
Design Strength: 4000 psi ← ?
Time Batched: 7:38 AM
Time Placed: 8:40 AM
Batch Size: 7 yds.
Slump: 4 in. (ASTM C 143)
Air Content: N/A % (ASTM C 173)
Concrete Temp: 66 °F
Ambient Temp: 20 °F
Water Added: 0 gal.
Technician: MSV

LABORATORY TEST RESULTS (ASTM C39)

Specimen	Test Date	Age	Load	Diameter	Area	Strength	Percent of Design	Type of Fracture
602	1/28/2013	7	52800	4.00	12.57	4200		1
603	2/18/2013	28	74740	4.00	12.57	5950	149%	1
604	2/18/2013	28	74390	4.00	12.57	5920	148%	1
605		0		4.00	12.57			

Remarks:

Copies to:

Reported by: _____
Kent Seegmiller
Concrete Laboratory Manager

NORTECH Geotechnical/Civil Consultants, Ltd.

FIELD CONSTRUCTION INSPECTION REPORT

PROJECT PSC Environmental JOB NO. 14441-28C

LOCATION 2095 Newlands Drive, Fernley, Nevada REPORT NO. 4

CONTRACTOR L & H Concrete WEEK ENDING 02-16-13

Work Description

February 11 - On site for epoxy inspection on anchor bolts for base plates (support tanks) for pad T5 and 307. Anchor bolts (1") and epoxy were placed in accordance with structural engineered drawings. Holes were drilled to proper embed depth of 9" and cleaned out thoroughly. (MSV)

PROCESS PIPING INSPECTION FORM

Philip Services Corporation / 21 EMI
PSC Fernley Facility
2095 Newlands Drive East
Fernley, NV 89408
(775)575-2760

Tank Number: T-5

Date Inspected: April 3, 2013

Fill Line Assembly:

Number of Fill Line Assemblies: 4 Fill Line Assemblies

Description: There are 4 fill line assemblies which includes 3 assemblies above the tank, and 1 assembly on the side of the tank. The bulkhead fitting on top of tank, and the bulkhead fitting and valve connection of the side of the tank, are the only permanent piping in the fill line assemblies. A temporary fill line is attached to each fill line assembly. There was no damage to the process pipe connection or to the tank shell. No evidence of leaking found. The permanent piping is secured and stable.

Discharge Line Assembly:

Number of Discharge Line Assemblies: 2 Discharge Line Assemblies

Description: The bulkhead fitting to the threaded valve connection is the only permanent piping in the discharge line assembly. A temporary discharge line is attached to the valve connection. There was no damage to the process piping connection or to the tank shell. No evidence of leaking found. The permanent piping is secured and stable.

INSPECTOR: Brian [signature] **DATE:** April 3, 2013

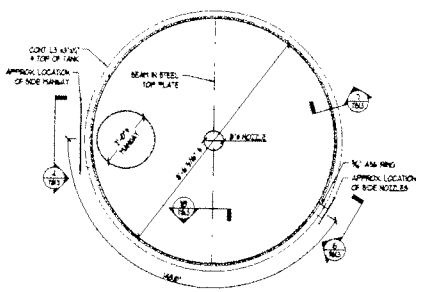

TANK TOP PLAN VIEW
SCALE: 1/2"=1'-0"

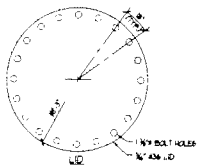

MANWAY OPENING & LID DETAILS
SCALE: 1"=1'-0"

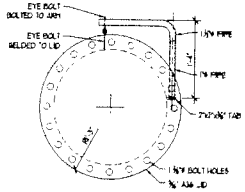

MANWAY LID SUPPORT DETAIL
SCALE: 1"=1'-0"

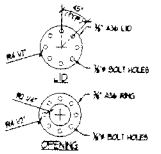

NOZZLE OPENING & LID DETAILS
SCALE: 1"=1'-0"

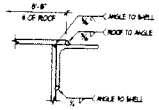

TOP ANGLE DETAIL
SCALE: 3"=1'-0"

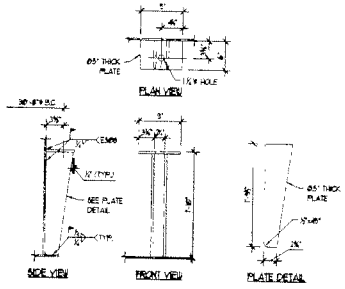

TYPICAL ANCHOR BOLT CHAIR
SCALE: 1"=1'-0"

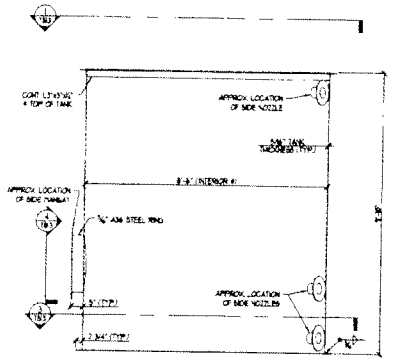

TANK ELEVATION
SCALE: 1/2"=1'-0"

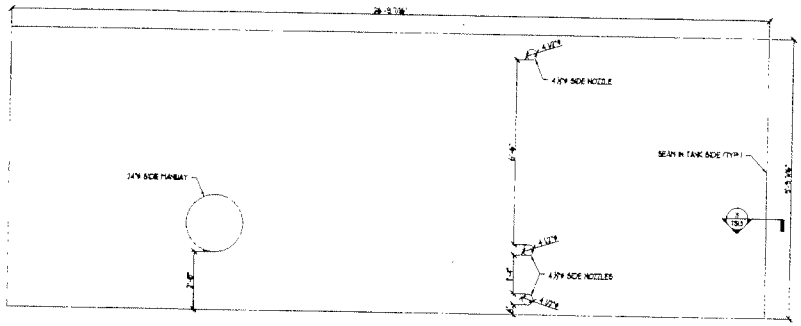

TANK SHELL STRETCH OUT
SCALE: 1/2"=1'-0"

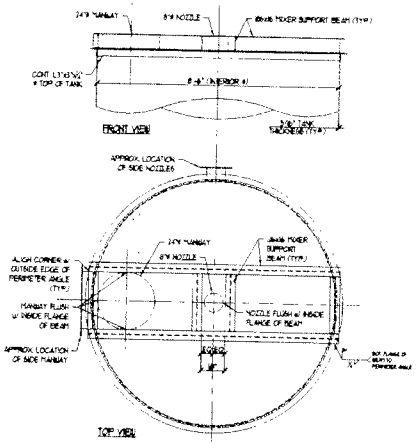

MIXER SUPPORT BEAM DETAIL
SCALE: 1/2"=1'-0"

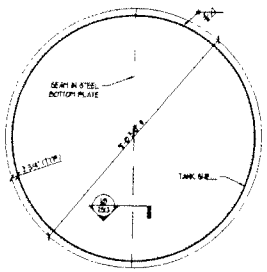

TANK BOTTOM PLAN VIEW
SCALE: 1/2"=1'-0"

TYPICAL TANK WELD DETAIL
SCALE: 3"=1'-0"

TYPICAL TANK SHELL WELD DETAIL
SCALE: 3"=1'-0"

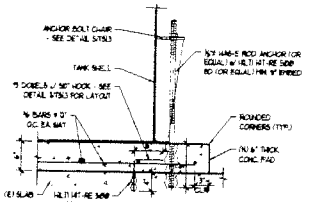

DETAIL OF CONNECTION BETWEEN NEW & EXISTING CONC. SLAB
SCALE: 1"=1'-0"

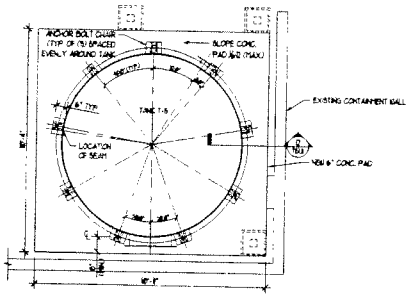

TANK ANCHORAGE PLAN VIEW
SCALE: 3/8"=1'-0"

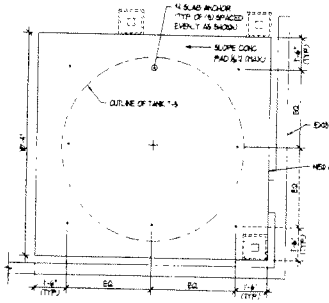

ANCHORAGE OF NEW CONC. PAD TO EXISTING CONC. SLAB
SCALE: 3/8"=1'-0"

FRONTENAC ENGINEERING GROUP
CIVIL / STRUCTURAL / LAND SURVEYING
2725 SUTTON BLVD.
ST. LOUIS, MISSOURI 63143
PHONE: (314) 644-2266 FULD (314) 644-6645
www.frontenacengineering.com

NO.	DATE	ISSUE / REVISION DESCRIPTIONS

DATE: 1/22/15
DESIGNED: JLS
DRAWN: KNT
CHECKED: MJTT

TANK No. T-5 DETAILS

PSC FERNLEY
TANK REPLACEMENT PROJECT
PREPARED FOR AUSENCO PSI
FERNLEY, LYON COUNTY, NEVADA

SHEET NO.
TS1.3

VersaFlex Incorporated
87 Shawnee Avenue
Kansas City, KS 66105
(913) 321-9000
(913) 321-1490 (fax)

Product Data Sheet

LC-25 Lock Coat
Extreme Chemical Exposure Lock Coat

Product Description - ***VersaFlex*** **LC-25 Lock Coat** is a solvent borne Fluoroelastomer, offering outstanding chemical, temperature and permeation resistance. **LC-25** is designed to be used as a lock coat after the application of ***VersaFlex*** Fast Set Spray materials. **LC-25** provides superior adhesion for the VT-40 Finish Coat. **LC-25** is a medium viscosity solvent borne coating suitable for most service environments.

Uses – ***VersaFlex*** **LC-25** may be used with all ***VersaFlex*** rapid curing polyurea sealants and spray coatings systems. **LC-25** is designed for use in severe duty environments subject to chemical and heat exposures.

Suitable for exposure to -
- Acids
- Caustics
- Fuels
- Aqueous solutions

Advantages -
- Excellent resistance to most harsh chemical environments
- Continuous operating temperature from -40°F to +400°F
- 500% elongation
- Very low coating permeability
- Excellent weather and UV resistance
- Will not harden or become brittle
- Will not shrink after cure

Physical Properties -

Color		Black or Grey
Solids Content, %	ASTM D2240	25
Shore A Hardness	ASTM D638	>45
Elongation	ASTM D638	500%
Tensile Strength, psi	ASTM D4541	>1,800
Bond Strength, psi (Fast Set Spray coatings)		>200
Viscosity, cps,	Grams loss @1,000 cycles	<700
Tabor Abrasion (H-22 wheel, 1000 gr load)	ASTM E96	0.011
Permeability (perm-inch)		0.0042
Pot Life @ 70° F, 50% RH (After Catalyzed)		30 – 45 min.
Cure Time @ 70°F, 50% RH (longer cure in lower temperatures)		7 days

Packaging -
- Four Gallon Kit: 4 gallons of **LC-25 Lock Coat** and a separate container of CA-**LC25**/VT40 Catalyst.
- One Gallon Kit: 1 gallon of **LC-25 Lock Coat** and a separate container of CA-**LC25**/VT40 Catalyst.

Mixing - ***VersaFlex*** **LC-25** is a two-component product.
- Thoroughly mix **LC-25** insuring that any solids that may have settled are dispersed back into solution.
- Add provided CA-**LC25**/VT40 Catalyst to **LC-25** Lock Coat and mix thoroughly.
- May be applied with brush, roller, squeegee, or lambs wool applicator.

Shelf Life - One year, in original, unopened factory containers under normal storage conditions of 55°F to 95°F.

VersaFlex Incorporated ©2011

Safety - Read Material Safety Data Sheet before using. Seal container tightly after use to prevent introduction of moisture laden air.

Application Recommendations -

1. Apply ***VersaFlex*** Fast Set Spray material. Apply **LC-25 Lock Coat** over Fast Set Spray material within 4 hours of application. Apply at a rate of 200 square feet per gallon using brush, roller, squeegee, or lambs wool applicator. Special care should be taken to insure all areas are completely and uniformly coated. Allow **LC-25 Lock Coat** to cure for 30 to 90 minutes prior to application of VT-40 Finish Coat.
2. Always insure that areas to be recoated are clean and dry prior to mixing and coating.

Surface Preparation and Installation - *VersaFlex* LC-25

is to be used in combination with ***VersaFlex*** Fast Set Spray materials and VT-40 Finish Coat. Consult ***VersaFlex Incorporated*** for specific installation instructions.

Technical Services - Sales and Customer Support (913) 321-9000

Warranty - *VersaFlex Incorporated*

will refund the price of or replace, at its election, product it finds to be defective provided the product has been used properly. Except as expressly stated above, the Company makes no warranty of merchantability and no warranty of fitness for any particular purpose, nor does it make any warranty, expressed or implied, of any nature whatsoever with respect to the product or its use. In no event shall the company be liable for delay caused by defects, for loss of use, for indirect, special or consequential damages, or for any charges or expenses of any nature incurred without its written consent.

VersaFlex Incorporated
87 Shawnee Avenue
Kansas City, KS 66105
(913) 321-9000
(913) 321-1490 (fax)

Product Data Sheet

VT- 40 Finish Coat
Extreme Chemical Exposure Finish Coat

Product Description - ***VersaFlex*** **VT-40 Finish Coat** is a combination of Viton and PTFE, offering outstanding chemical, temperature and permeation resistance. **VT-40 Finish Coat** is designed to be used in combination with **LC-25 Lock Coat** and ***VersaFlex*** Fast Set Spray materials. ***VersaFlex*** **VT-40** is a heavy solids protective top coating suitable for most service environments. **VT-40** may be applied directly to metal. ***VersaFlex*** recommends minimum 20 dry mils thickness for containment of harsh chemicals.

Uses - ***VersaFlex*** **VT-40 Finish Coat** may be used with all ***VersaFlex*** rapid curing polyurea sealants and spray coatings systems. **VT-40** is designed for use in severe duty environments subject to chemical and heat exposures.

Suitable for Exposure to -

- Anywhere extreme chemical exposure occurs and substrate must be protected

Exposures may include:

- Acids
- Caustics
- Fuels
- Aqueous solutions

Advantages -

- Excellent resistance to most harsh chemical environments
- Continuous operating temperature from –40°F to +400°F
- 250% elongation
- Very low coating permeability
- Excellent weather and UV resistance
- Will not harden or become brittle
- Will not shrink after cure

Physical Properties -

Color		Gray or Yellow
Solids Content, %		42
Shore A Hardness	ASTM D2240	>70
Elongation	ASTM D638	250%
Tensile Strength, psi	ASTM D638	>1,000
Bond Strength, psi (Fast Set Spray coatings)	ASTM D4541	>200
Viscosity, cps		>7,000
Tabor Abrasion (H-22 wheel, 1000 gr load)	ASTM D 4060	0.002
Permeability (perm-inch)	ASTM E96	0.0017
Pot Life @ 70° F, 50% RH (After Catalyzed)		30 – 45 mins
Cure Time @ 70°F, 50% RH (longer cure in lower temperatures)		7 days

Packaging -

- Four Gallon Kit: 4 gallons of **VT-40 Finish Coat** and a separate container of CA-LC25/**VT40** Catalyst.
- One Gallon Kit: 1 gallon of **VT-40 Finish Coat** and a separate container of CA-LC25/**VT40** Catalyst.

VersaFlex Incorporated ©2011

Mixing -

***VersaFlex* VT-40** is a two-component product.

- Thoroughly mix **VT-40 Finish Coat** insuring that any solids that may have settled are dispersed back into solution.
- Add provided CA-LC25/**VT40** Catalyst to **VT-40 Finish Coat** and mix thoroughly.
- May be applied with brush, roller, squeegee, or lambs wool applicator.

Shelf Life - One year, in original unopened factory containers, under normal storage conditions of 55°F to 95°F.

Safety - Review Material Safety Data Sheet before using. Seal container tightly after use to prevent introduction of moisture laden air.

Application Recommendations -

1. Apply ***VersaFlex*** Fast Set Spray material and LC-25 Lock Coat. Allow LC-25 Lock Coat to dry for 30 to 90 minutes before over coating. Apply mixed **VT-40 Finish Coat** to achieve a total dry film thickness of approximately 20 mils using a brush, roller, squeegee, or lambs wool applicator. Special care should be taken to insure all areas are completely and uniformly coated. Consult ***Material Processing Information*** for specific spread rates.
2. Allow 1 to 3 hours of cure time between coats of **VT-40 Finish Coat**. Always insure that areas to be recoated are clean and dry prior to mixing and coating. Allow to cure for 7 days for full effective chemical resistance.

Preparation and Installation - ***VersaFlex* VT-40** is to be used in combination with LC-25 Lock Coat and ***VersaFlex*** Fast Set Spray materials. Consult ***VersaFlex*** for specific installation instructions.

Technical Services - Sales and Customer Support (913) 321-9000

Warranty ***VersaFlex Incorporated*** will refund the price of or replace, at its election, product it finds to be defective provided the product has been used properly. Except as expressly stated above, the Company makes no warranty of merchantability and no warranty of fitness for any particular purpose, nor does it make any warranty, expressed or implied, of any nature whatsoever with respect to the product or its use. In no event shall the company be liable for delay caused by defects, for loss of use, for indirect, special or consequential damages, or for any charges or expenses of any nature incurred without its written consent.

VersaFlex Incorporated ©2011

VersaFlex Incorporated
87 Shawnee Avenue
Kansas City, KS 66105
(913) 321-9000
(913) 321-1490 (fax)

Product Data Sheet

FSS 50DM
Spray Polyurea

Product Description - ***VersaFlex*** **FSS 50DM** is a fast set, rapid curing, 100% solids, flexible, two-component polyurea elastomer spray coating material. **FSS 50DM** is used by itself or in combination with other materials to produce coatings, liners, wearing courses, and resilient surfaces on metal and other substrates. **FSS 50DM** produces an extremely tough film at all thicknesses. Single or multiple pass applications produce films from 10 mils to 1,000 mils without appreciable sag or runs. **FSS 50DM** may be applied in all positions and to any properly prepared substrate. **FSS 50DM** is inert, it will not hydrolyze, leach, or contaminate other materials, and is bondable and paintable. **FSS 50DM** is relatively moisture and temperature insensitive, allowing application in the most problematic ambient conditions.

Uses - ***VersaFlex*** **FSS 50DM** is a superior metal coating material designed specifically for industrial applications receiving constant or intermittent attack from contained materials, most corrosive substrates and abrasive action. **FSS 50DM** may be used to coat any properly prepared substrate. **FSS 50DM** is flexible, accommodating to movement of the substrate, yet strong enough to remain intact under all conditions except major structural dislocations. With or without reinforcements, **FSS 50DM** may be used in transitional areas with confidence. **FSS 50DM** may be used in interior or exterior applications. **FSS 50DM** is recommended for repair of other films, may be applied to metal and other substrates, in new construction and in cold weather conditions.

Ideal for Applications In -

- Waterproofing Membrane
- Chemical Plants
- Secondary Containment
- Liners
- Metal Coating
- Tank Linings

Advantages -

- Odorless, No VOC's
- 1:1 Mix Ratio by Volume
- Fast Return to Service
- Rapid Gel Time
- Installation temperature range from -40°F to 300°F
- Operating Temperatures -40°F to 350°F

Physical Properties -

Property	Test Method	Typical Value
VOC	ASTM D3960	Zero
Solids Content		100%
Gel Time		3 -7 seconds
Tack Free		8 -12 seconds
The following properties are typical after maintaining cured product at 70 – 77°F for 50 days:		
Tensile Strength (psi)	ASTM D638	6,000 - 6,800
Tensile Elongation (%)	ASTM D638	280 - 360
Modulus of Elasticity (psi)	ASTM D638	2,200 - 2,800
Tear Strength (lb/in)	ASTM D624	330 - 360
Shore (D) Hardness	ASTM D2240	50
Taber abrasion, mg wt loss (1000 g, 1000 revs, H-18)	ASTM D4060	250

Limitations - **FSS 50DM** should not be used for direct contact with extremely high or low pH attack. Composite systems are available. Consult **VersaFlex**.

VersaFlex Incorporated ©2011

Coverage Rates -

Theoretical Square Feet Per Gallon

Mils	10	15	50	60	80	100	125
Sq. Ft.	160	107	32	27	20	16	13

Note: 1604 mil inches per gallon. Totally dependent on substrate texture and condition.

Packaging -

- One Hundred Ten Gallon Kit: 55 gallons of 'A' side and 55 gallons of 'B' side. Drum containers filled by weight, volume is closely approximated.

Mixing - FSS 50DM must be spray applied using approved equipment. Use 1:1 ratio pump, with appropriate material heaters as required for individual application.

Colors - Standard color is charcoal gray, light gray, or black. Other colors available upon request. Consult ***VersaFlex***.

Shelf Life - One year, in original, unopened factory containers under normal storage conditions of 50°F to 95°F.

Clean Up - Cured product may be disposed of without restriction. Excess liquid 'A' and 'B' material should be mixed together and allowed to cure, then disposed of in the normal manner. Product containers that are "drip free" may be disposed of according to local, state and federal laws.

Safety - Review Material Safety Data Sheets at ***VersaFlex.com***
Basic safety for personal protection is:

- Long-sleeve overalls or disposable Tyvex overalls
- Rubber gloves
- Respirator
- Splash shield or safety glasses with splash guards
- Do not take internally.
- Rubber or leather boots
- Do not use near high heat or open flame
- Keep out of the reach of children

Surface Preparation and Application – Please review the Material Processing & Handling Information for preparation and application procedures. Substrate priming is not required on all metals, consult ***VersaFlex*** for recommendations. Also, please consult the ***VersaFlex*** Spray Gun Configuration Recommendation PDF for specific modules and tips.

Technical Services - Sales and Customer Support (913) 321-9000

Warranty - *VersaFlex* Incorporated will refund the price of or replace, at its election, product it finds to be defective provided the product has been used properly. Except as expressly stated above, the Company makes no warranty of merchantability and no warranty of fitness for any particular purpose, nor does it make any warranty, expressed or implied, of any nature whatsoever with respect to the product or its use. In no event shall the company be liable for delay caused by defects, for loss of use, for indirect, special or consequential damages, or for any charges or expenses of any nature incurred without its written consent.

Aromatic Chemical Resistance-

VersaFlex INCORPORATED

R=Recommended
C=Recommended Conditionally (washdown within 1 hour of spillage)
N=Not Recommended
1=Suitable for immersion and/or splash and spillage conditions
2=Suitable for occasional or intermittent contact for up to 72 hours

Test Procedure: **ASTM D3912** 25°C Exceeds 1 Year

Test Media	
Acetic Acid 10%	C
Ammonium Hydroxide 10%/20	R
Diesel Fuel	R
Gasoline	R
Hydraulic Fluid	R
Hydrochloric Acid 5%/10%	R
Methanol	R
Motor Oil	R
MTBE	R
MTBE/Gasoline 5%	R
NaCl/Water 10%	R
Phosphoric Acid 10%	R
Potassium Hydroxide 10%/20%	R
Sodium Hydroxide 10%/20%/50%	R
Sugar/Water 10%	R
Sulfuric Acid 5%/10%	R
Skydrol	2
Toluene	C
Water	R
2-Methylbutane	R

Test Procedure: **ASTM B117**, after 1000 hours

Test	Result
Blistering, Bare Steel	None
Corrosion from Scribe,mm	4.0
Adhesion, psi, Elcometer	>2000

Note: Applied at 2-mil blast profile, KTA-Tator panels. No primer.

Test Procedure: **ASTM D1308** 25°C Exceeds 1 Year

Test Media	
Acetone	C
Antifreeze	R
Benzene	R
Benzoic Acid	R
Butyl Alcohol	R
Butyl Cellosolve	R
Carbon Dioxide	R
Calcium Hypochlorite	N
Chlorine (5000 ppm in water)	2
Citric Acid	R
Cylloexanol	R
Dichloroacetic Acid	C
Dimethyl Formamide	N
Ethanol	2
Ethylene Glycol	1
Gasoline	R
Hexane	R
Hydraulic Oil	R
Lactic Acid 10%	1
Methylene Chloride	C
Methyl Ethyl Ketone	C
Methanol	R
Mineral Spirits	R
Monobutyl Ether	R
Nitric Acid 20%	C
Phenol	2
Skydrol	2
Sodium Bicarbonate	R
Sodium Chloride	R
Sodium Hydroxide 50%	R
Sodium Hypochlorite 10%	2
Stearic Acid	R
Sulfuric Acid 70%	N
Trichloroethylene	C
Trisodium Phosphate	R
Toluene	C
Vinegar	R
Xylene	C

Test Procedure: **ASTM D 5322**
Jet Fuel A — R

VersaFlex Incorporated ©2011

VersaFlex VT-40 Chemical Resistance Chart

Product Rating Key:
A = little or no effect
B = minor to moderate effect
C = severe effect, not recommended

T = no data, likely to be compatible
X = no data, not likely to be compatible

Chemical	Rating	Chemical	Rating
Acetaldehyde	C	Amyl acetate	C
Acetic acid (30%)	A	Amyl alcohol	A (212°F)
Acetic acid (20%)	A	Aniline	A-B
Acetic acid (glacial)	C	Aniline	B (158°F)
Acetic anhydride	C	Anlline	C (300°F)
Acetone	C	ASTM Oil #1	A (300°F)
Acetylene	A	ASTM Oil #3	A (300°F)
Aluminum chloride solutions	A	ASTM reference fuel A	A
Aluminum sulfate solutions	A	ASTM reference fuel B	A
Ammonia, anhydrous	C	ASTM reference fuel C	A
Ammonium chloride solutions	A	Asphalt	A (400°F)

Chemical	Rating	Chemical	Rating
Barium hydroxide solutions	A	Boric acid solutions	A
Beer	A	Bromine, anhydrous liquid	A (212°F)
Benzaldehyde	C	Butane	A
Benzene	B (158°F)	Butyl acetate	C
Benzoyl chloride	B	Butyraldehyde	C
Borax solutions	A	Butyric acid	T

Chemical	Rating	Chemical	Rating
Calcium bisulfite solutions	A	Chloroacetic acid	C
Calcium chloride solutions	A	Chlorobenzene	A
Calcium hydroxide solutions	A	Chloroform	A
Calcium hypochlorite, 5%	A	Chlorosulfonic acid	C
Calcium hypochlorite, 20%	B (158°F)	Chromic acid, 10-50%	A
Carbon bisulfide	A	Citric acid solutions	A
Carbon dioxide	A	Copper chloride solutions	A
Carbon tetrachloride	B (158°F)	Copper sulfate solutions	A
Castor oil	A	Cottonseed oil	A (300°F)
Chlorine gas, dry	A (212°F)	Creosote oil	A (212°F)
Chlorine gas, wet	A	Cumene	A (200°F)

Chemical	Rating	Chemical	Rating
Dibutyl phthalate	B	Dowtherm A	A (212°F)
Diethyl sebacate	B	Dowtherm A	B (400°F)
Dioctyl phthalate	B		

Chemical	Rating	Chemical	Rating
Epichlorohydrin	C (212°F)	Ethylene dichloride	A-B (120°F)
Ethyl acetate	C	Ethylene glycol	A (250°F)
Ethyl alcohol	A	Ethylene oxide	C (158°F)
Ethyl chloride	A	Exxon 2380 turbo oil (lube)	A (392°F)
Ethyl ether	B		

Chemical	Rating	Chemical	Rating
Ferric chloride solutions	A	Freon -22	C
Fluosilicic acid	T	Freon -22	X (130°F)
Formaldehyde, 40%	A	Freon -113	A
Formic acid	C (158°F)	Freon -113	T (130°F)
Freon -11	B	Freon -114	A
Freon -11	T (130°F)	Freon -114	T (130°F)
Freon -12	A-B	Furfural	C (158°F)
Freon -12	B (130°F)	Fyrquel 220 (hydraulic fluid)	A (212°F)

	Rating	Chemical	Rating
Gasoline	A	Glycerin	A (250°F)
Glue	A		

Chemical	Rating	Chemical	Rating
n-Hexane	A	Hydrofluoric acid, 48%	A (212°F)
Hydrazine	C	Hydrofluoric acid, 75%	B (158°F)
Hydrochloric acid, 20%	A	Hydrofluoric acid, anhydrous	A
Hydrochloric acid, 20%	A (230°F)	Hydrogen	A
Hydrochloric acid, 37%	A (158°F)	Hydrogen peroxide, 90%	A
Hydrochloric acid, 37%	B (230°F)	Hydrogen peroxide, 90%	C (270°F)
Hydrocyanic acid	A	Hydrogen sulfide	B (270°F)

Chemical	Rating	Chemical	Rating
Isooctane	A	Isopropyl ether	C
Isopropyl alcohol	A		

Chemical	Rating	Chemical	Rating
JP-4	A (400°F)	JP-6	A (100°F)
JP-5	A (400°F)	JP-6	B (550°F)

Chemical	Rating	Chemical	Rating
Kerosene	A (158°F)	Kerosene	B (400°F)

Chemical	Rating	Chemical	Rating
Lacquer solvents	C	Linseed oil	A
Lactic acid	A	Lubricating oils	A (158°F)

Chemical	Rating	Chemical	Rating
Magnesium chloride solutions	A	Methyl ethyl keton	C
Magnesium hydroxide solutions	A	Methylene chloride	B (100°F)
Mercuric chloride solutions	A	Mineral oil	A
Mercury	A	Mobile XRM 206A (aircraft lube)	A (350°F)
Methyl alcohol	A-B		

Chemical	Rating	Chemical	Rating
Naphtha	A (150°F)	Nitric acid, 70%	A
Naphthalene	A (176°F)	Nitric acid, 70%	B (100°F)
Nitric acid, 10%	A	Nitric acid, red fuming	B
Nitric acid, 30%	A	Nitric acid, red fuming	C (158°F)
Nitric acid, 60%	A	Nitrobenzene	B

Chemical	Rating	Chemical	Rating

Oleic acid	B	Oleum (red fuming sulfuric acid)	B (140°F)

Chemical	Rating	Chemical	Rating
Palmitic acid	A	Pickling solution (20% nitric, 4% HF)	A
Perchloroethylene	A (212°F)	Pickling solution (17% nitric, 4% HF)	A
Phenol	A (212°F)	Pickling solution (20% nitric, 4% HF)	C (225°F)
Phenol	B (300°F)	Picric acid	A
Phosphoric acid, 20%	A	Potassium dichromate solutions	A
Phosphoric acid, 60%	A (212°F)	Potassium hydroxide solutions	A
Phosphoric acid, 70%	A	Pydraul 312°C	A
Phosphoric acid, 85%	A	Pyridine	C

Chemical	Rating	Chemical	Rating
QF1-2023 (silicone brake fluid)	A (392°F)		

Chemical	Rating	Chemical	Rating
SAE #10 Oil	A	Stannic chloride	A
Sea water	A	Stannous chloride, 15%	A
Shell turbine oil 307	B (392°F)	Stearic acid	T
Silicone grease	A	Styrene	A
Skydrol 500	C	Sulfur, molten	A (250°F)
Skylube 450	C (392°F)	Sulfur dioxide, liquid	A
Soap solutions	A	Sulfur dioxide, gas	A
Sodium chloride solutions	A	Sulfur trioxide	A
Sodium dichromate, 20%	A	Sulfuric acid, up to 5%	A
Sodium hydroxide, 20%	A	Sulfuric acid, 5-10%	A
Sodium hydroxide, 46%	A	Sulfuric acid, 10-50%	A
Sodium hydroxide, 46%	C (100°F)	Sulfuric acid, 50-80%	A
Sodium hydroxide, 50%	C	Sulfuric acid, 60%	A (250°F)
Sodium hydroxide, 73%	C	Sulfuric acid, 90%	A (158°F)
Sodium hypochlorite, 5%	A	Sulfuric acid, 95%	A
Sodium hypochlorite, 20%	B (158°F)	Sulfuric acid, 95%	A (158°F)
Sodium peroxide solutions	A	Sulfuric acid, fuming 20% oleum	A
Soybean oil	A (250°F)	Sonoco XS-820 (EP lube)	A (300°F)

Chemical	Rating	Chemical	Rating
Tannic acid, 10%	A	Trichlorethylene	B (158°F)
Tartaric acid	A	Tricresyl phosphate	A (300°F)
Tetrahydrofuran	C	Triethanolamine	C
Toluene	B (100°F)	Trisodium phosphate solutions	A
Tributyl phosphate	C (212°F)	Tung Oil	A
Trichlorethylene	A	Turpentine	A (158°F)

Chemical	Rating	Chemical	Rating
Xylene	A	Zinc chloride solutions	A
Xylene	A (212°F)		

Section

Elastomer Liner – Metal Containment

PART 1 - GENERAL

1.01 Summary

A. Furnish labor, products and equipment required for the application of a spray elastomer liner system to suitably prepared metal substrates as shown in the Plans and specified herein. The lining system shall be a spray applied, 100% polyurea, fast cure, high-build lining system. Apply polyurea liner at 40 mils minimum with a 20 mil viton/teflon topcoat, unless required otherwise by Contract Documents.

1.02 Reference Organizations:

American Concrete Institute
PO Box 9094
Farmington Hills, MI 48331-9094
ACI

American Society for Testing and Materials
Barr Harbor Drive
West Conshohocken, PA 19428
ASTM

1.03 Reference Standards

A. The below listed standards are incorporated into specification by reference and are a part of requirements for the Work.

B. ACI Standards

ACI 117-90	Standard Specification for Tolerances for Concrete Construction and Materials
ACI 301-96	Specifications for Structural Concrete

C. ASTM Standards

ASTM D 412-87	Test Method for Rubber Properties in Tension
ASTM D 624-91	Tear Strength for Conventional Vulcanized Rubber and Thermoplastic Elastomer
ASTM D 638-91	Tensile Properties of Plastics
ASTM D 2240-91	Rubber Property- Durometer Hardness
ASTM D 4060-90	Test Method for Abrasion Resistance of Organic Coatings by Tabor Abraser
ASTM E 96	Water Vapor Transmission of Materials

1.04 Quality Control Provisions

A. Manufacturer Qualifications: Use manufacturer with minimum three years experience providing polyurea based sealants and coatings. The manufacturer should be a primary blender of polyurea product with proprietary formulations, an Authorized Contractor program, and capacity to provide field technical services as required.

B. Contractor Qualifications: Use Contractor holding a current Authorized Contractor Certificate from the manufacturer.

1.05 Quality Assurance Provisions

A. Contractor. Employ lead person holding a current certificate from VersaFlex Incorporated. Employ experienced superintendents and installers.

B. Schedule pre-installation conference to review installation schedule, shut down and restricted access procedures. Indicate Owner's Representative and Contractor's Superintendent.

C. Inspect containment areas prior to Contract to determine surface preparation requirements for each individual area.
D. Inspect surface preparation, application procedures, and review proposed dry film thickness at each installation location.
E. Schedule post-installation conference for punch list items, Owner check-off on completed work, and submittal of final billings.

1.06 Submittals
A. Submit project name and description, Owner's name and address, and name of installing Contractor to VersaFlex Incorporated.
B. Submit to manufacturer MSDS, chemical data, and general information on materials to be contained.
C. See Submittals sections of Project Documents for submittal procedures.
D. Submit product data sheets for products incorporated in Work to Owner's Representative.
E. Submit shop drawings, samples, certifications, project field reports, and inspection reports as directed.
F. Submit MSDS sheets for products used in the Work.
G. Submit manufacturer's qualifications and Contractor's qualifications.

1.07 Project Conditions
A. Assure Owner's materials, equipment, and personal possessions are removed to Owner's satisfaction.
B. Sign removal exception list and retain record copy. List Owner's property to remain in place during preparation and installation of liner system.
C. Ambient installation temperature must be above 40° F.
D. Assure ventilation of enclosed spaces and illumination is adequate for installation. Submit plan if required.
E. Assure no personal property is within spray fly pattern during installation of spray components.

1.08 Delivery, Storage, and Handling
A. Deliver product in manufacturer's original containers.
B. Store product in warm dry condition.
C. Replace product damaged by shipment, weather, or job conditions.

PART 2 - PRODUCTS

2.01 Manufacturer:

VersaFlex Incorporated
87 Shawnee Avenue
Kansas City, KS 66105
(800) 561-6191
Fax: (913) 321-1490

2.02 Materials
A. PW-1 Primer. 25% solids deeply penetrating, single component modified isocyanate, Moisture will enhance activation. Apply by brush, spray, or roller to damp or dampened surfaces at 500 square feet per gallon.

Property, Cured Product	Typical Value
Specific Gravity @ 77 degrees F	1.05
Color	Translucent amber
Weight/Gallon	8.75 lbs.
Boiling Point	415° F
VOC	787.7 g/l

Bond Strength to Damp Concrete, ASTM D 4541	Concrete fails before loss of bond
Solids content	25%

B. Base Coat. FSS/50DM - 100% solids, rapid curing polyurea. Install by spray. Install at 40 dry mils.

Property, Cured Product	Test Method	Typical Value
Solids Content		100%
Shore D Hardness	ASTM D 2240	50 D
Elongation	ASTM D 638	250%
Tensile Strength, psi	ASTM D 638	2125
100% Modulus, pli	ASTM D 638	1440
Tear Strength, psi, Die C	ASTM D 624	390
Tabor Abrasion, mg. Loss (1000 gm, 1000 rev, H-18)	ASTM D 4060	250
Moisture Vapor Transmission	ASTM E 96	0.025 perms
Tack Free		15 Seconds
Gel Time		2 Seconds
Open to Traffic		1 Hour

C. Lock Coat – LC25 Lock Coat - 25% solids, liquid viton interlaminer primer coat. Install by spray or hand dependent on area of application. Install at 4 mils (DFT).

Property, Cured Product	Typical Value	
Color		Black
Solids Content, %		25
Shore A Hardness	ASTM D2240	>45
Elongation	ASTM D638	500%
Tensile Strength, psi	ASTM D638	>1,800
Bond Strength, psi (Fast Set Spray coatings)	ASTM D4541	>200
Viscosity, cps,		<700
Tabor Abrasion (H-22 wheel, 1000 gr load)	Grams loss @1,000 cycles	0.011
Permeability (perm-inch)	ASTM E96	0.0042
Pot Life @ 70° F, 50% RH (After Catalyzed)		30 min –2 hrs
Cure Time @ 70°F, 50% RH (longer cure in lower temperatures)		5 Days

D. Top Coat – VT40 Finish Coat– 40% solids, liquid viton/Teflon finish coat. Install by spray or hand depending on area of application. Install at 16 mils (DFT).

Property, Cured Product	Typical Value	
Color		Light Blue
Solids Content, %		40
Shore A Hardness	ASTM D2240	>70
Elongation	ASTM D638	250%
Tensile Strength, psi	ASTM D638	>1,000
Bond Strength, psi (Fast Set Spray coatings)	ASTM D4541	>200
Viscosity, cps,		>7,000
Tabor Abrasion (H-22 wheel, 1000 gr load)	Grams loss @1,000 cycles	0.002
Permeability (perm-inch)	ASTM E96	0.0017
Pot Life @ 70° F, 50% RH (After Catalyzed)		30 min –2 hrs
Cure Time @ 70°F, 50% RH (longer cure in lower temperatures)		5 Days

2.03 Equipment

A. Provide spray equipment suitable for use with products specified.

2.04 Source Quality Control

A. List manufacturer's batch numbers for each unit of product used in Work.

PART 3 - EXECUTION

3.01 Examination

A. Assure Owner's property removals have been made prior to commencement of preparation and installation of liner.

B. Inspect each containment area to develop proper surface preparation requirement. Submit to Owner surface preparation requirements for each individual area prior to final Contract.

3.02 Preparation

A. Provide clean sound substrate. Degrease surfaces as required.

B. Prepare metal substrates to minimum SSPC-SP 10 with a minimum blast profile of 2.5 mils.

C. Mask protected surfaces prior to spray applications.

D. Erect spray curtains and partitions as required.

E. Mask other surfaces as required.

3.03 Installation

A. Spray or roll PW-1primer at a rate of 2 to 3 wet mils (550 to 800 square feet per gallon) over surfaces to receive liner system. Avoid any buildup or ponding of primer. Areas of accumulated primer should be wiped dry with a cotton rag. Allow primer to become dry to the touch (1 to 6 hours depending on temperature)

B. Spray base coat FSS 50DM over primed surfaces at 1/2 authorized rate.

C. Retouch coat by filling low spots or areas with inadequate thickness.

D. Spray additional coats in perpendicular direction to achieve specified system thickness. Retouch as required.

E. Within four hours of installing FSS 50DM, apply 4 mils (DFT) of LC25 Lock Coat by brush, roller or spray.

F. Allow LC25 Lock Coat to dry for a minimum of 30 minutes, apply 8 mils (DFT) VT40 Finish Coat. Allow to cure 30 minutes to 2 hours depending on temperature. Apply final 8 mil (DFT) coat of VT40 Finish Coat

3.04 Field Quality Control

A. Components of liner may be color-coded. Assure that each subsequent coat completely hides prior coating.

B. Perform wet and dry film thickness tests as required.

C. Maintain spray and other installation equipment in proper operating condition throughout installation. Provide reserve equipment as required.

3.05 Cleaning

A. Clean spills and over-sprays as they occur.

B. Consult manufacturer's literature and MSDS sheets for proper cleaning products and methods.

C. Clean site to Owner's satisfaction prior to final acceptance.

3.06 Protection

A. Protect installed work prior to acceptance by Owner.

B. Provide protective clothing, gloves, and respirators for use by installers as required.

tobey wade
STRUCTURAL ENGINEERS

August 7, 2013
Project No. R405-13-13

Ms. Tracy Buono
Facility/Operations Manager
PSC FERNLEY FACILITY
2095 Newlands Drive East
Fernley, NV 89408

RE: TANK T-5 CERTIFICATION

Dear Ms. Buono:

In accordance with the Fernley Facility Amended Tank Replacement Plan dated December 17, 2012, and Appendix D-6 of the pending July 2012 RECRA Permit, each new tank is required to be certified by Independent Registered Professional Engineers (IRPE's) prior to being placed into service. This letter has been prepared to document the evaluation of Tank T-5 as performed by Tobey-Wade Consulting.

Background

Tank T-5 is a welded structural steel tank with a working capacity of 3,750 gallons.

Frontenac Engineering designed the tank shell and conducted a structural evaluation to determine the foundation requirements under static and dynamic (seismic) loads. Frontenac Engineering also conducted a stability analysis and designed anchorage for the tank.

Certification of the tank liner's compatibility with the proposed waste stream has been provided by others.

Findings

Based on our evaluation, the following systems are hereby certified as being in compliance with the Amended Tank Replacement plan:

- Tank T-5 has sufficient strength to contain the proposed waste materials without rupturing based on the calculations performed by Frontenac Engineering.

NEVADA OFFICE
648 LANDER STREET ■ RENO, NEVADA 89509 ■ TEL: (775) 324.7757 ■ FAX: (775) 324.7797

- Tank T-5 will be situated on a reinforced concrete foundation system which is capable of adequately supporting the tank and its contents under static and dynamic conditions based on the calculations performed by Frontenac Engineering.

- Tank T-5 will be located in an area with sufficient secondary containment as required by 40 CFR Ch. I, 264.193.

- Tank T-5 is anchored to resist overturning when subjected to site-specific 2006 International Building Code level seismic events based on the calculations performed by Frontenac Engineering.

- Tank T-5 is anchored to prevent sliding when subjected to site-specific 2006 International Building Code level seismic events based on the calculations performed by Frontenac Engineering.

- The process piping fill and discharge connections have been inspected and found to be undamaged and with no evidence of leakage. The piping connections are adequately attached to the tank to prevent displacement during an earthquake. The associated Process Piping inspection form is attached.

- Special Inspection of the epoxy anchor bolt installation was performed as required by the International Building Code. Copies of the Special Inspection reports are attached.

- Tank T-5 has been subjected to a 24-hour leak test and found to be watertight. The Tank Leakage Test results are included in the Tank Inspection Form, copy attached.

- The exterior of Tank T-5's shell wall has been inspected and found to be undamaged. The Tank Shell Inspection results are included in the Tank Inspection Form, copy attached.

Tobey-Wade Consulting witnessed the tank leakage test and conducted the tank shell inspection, under my direct supervision. Special Inspections were performed by inspectors from Nortech Consultants based on anchorage requirements provided by Frontenac Engineering.

Certification Statement

I certify under penalty of law that this report and all attachments were prepared under my direction and supervision in accordance with a system developed to assure that qualified personnel properly gather and evaluate the information submitted. Based on my inquiry of the person or persons who manage the system or those persons directly responsible for gathering the information, the information, submitted is, to the best of my knowledge and belief, true, accurate, and complete. I am aware that there are significant penalties for submitting false information, including the possibility of fines and imprisonment for knowing violations.

This report has been prepared in accordance with accepted engineering practices and is subject to the assumptions and limitations stated in the report. Also note that this certification covers the aforementioned aspects of Tank T-5 only.

Please feel free to contact me at your convenience should you have any questions relating to our findings.

Sincerely,
TOBEY-WADE CONSULTING

Terrence R. Tobey

TERRENCE R. TOBEY, P.E., S.E.
Principal Structural Engineer

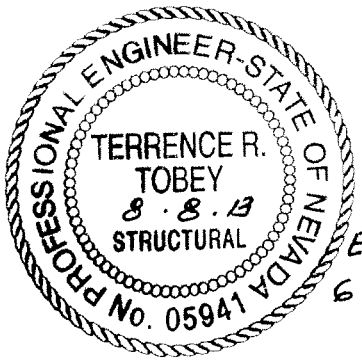

TANK INSPECTION FORM

OWNER: Philip Services Corporation / 21 EMI
PSC Fernley Facility
2095 Newlands Drive East
Fernley, NV 89408
(775)575-2760

TANK NO.: T-5

TANK SHELL INSPECTION

Date Inspected: February 26, 2013

Findings: Paint has numerous scrapes on rear (S.) side & smaller scrapes on east side

TANK ANCHORAGE STRUCTURAL OBSERVATION / Tank Pad 7" high

Type of Anchorage System: steel chair w/ (1) epoxy anchor/chair

Date Inspected: February 26, 2013

# of Anchor Plates: 9

AB Type, Diameter and Number/plate: epoxy, 7/8" ϕ, 1 per chair

Plate Contact with Tank: welded to shell

Special Inspection Completed? Yes per Mat

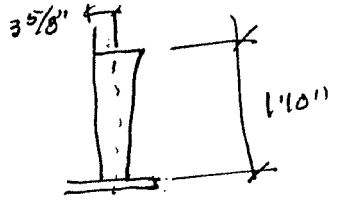

TANK LEAKAGE TEST

Date Filled: February 26, 2013, 2:30 pm

Water Level below Inspection Hatch: 13 3/16" below lower edge

Date of Re-inspection: 2/27/13

Water Level below Inspection Hatch: 13 3/16

Shell Leakage? No, No

Leakage on Floor/Drain Pan at Manifold? No, No

INSPECTOR: Terrence Tobey **DATE:** ~~Feb.~~ Feb. 26, 2013

INSPECTOR: Brian Ellis **DATE:** 2/27/2013

NORTECH Geotechnical/Civil Consultants, Ltd.

FIELD CONSTRUCTION INSPECTION REPORT

PROJECT PSC Environmental JOB NO. 14441-28C

LOCATION 2095 Newlands Drive, Fernley, Nevada REPORT NO. 3

CONTRACTOR L & H Concrete WEEK ENDING 01-26-13

Work Description

January 21 - Inspected steel reinforcement in tank slabs (T-5 & 307). Rebar was placed in accordance with structural details on approved plans. I performed epoxy inspection of rebar dowel hooks (#3's) in tank slab. Holes were drilled to proper embed depth (4") and cleaned out thoroughly. Epoxy and dowels were placed in accordance with structural details on approved plans, I was on site for concrete pour on tank slabs and I cast one set of concrete cylinders and I performed one slump test. (MSV)

January 22 - Transported previously cast cylinders to the laboratory for testing. (MSV)

GEOTECHNICAL/CIVIL CONSULTANTS, LTD. [illegible]

REPORT OF CONCRETE CYLINDER TEST

Project Number: 14441-28C
Report Number: 4
Project: PSC Environmental
Client: Equipment Pro, Inc.
Address: 721 Parkwood Dr., Ste. Genevieve, MO 63670

Attn:

FIELD TEST CONDITIONS AND RESULTS (ASTM C31)

Date Placed: 1/21/2013
Time Sampled: 8:40 AM
Location of Sample: Tank Slabs, T-5 and 307
Supplier: 3D
Truck Number: 482
Ticket Number: 36034
Mix Number: 1126RP
Design Strength: 4000 psi ← ?
Time Batched: 7:38 AM
Time Placed: 8:40 AM
Batch Size: 7 yds.
Slump: 4 in. (ASTM C 143)
Air Content: N/A % (ASTM C 173)
Concrete Temp: 66 °F
Ambient Temp: 20 °F
Water Added: 0 gal.
Technician: MSV

LABORATORY TEST RESULTS (ASTM C39)

Specimen	Test Date	Age	Load	Diameter	Area	Strength	Percent of Design	Type of Fracture
602	1/28/2013	7	52800	4.00	12.57	4200		1
603	2/18/2013	28	74740	4.00	12.57	5950	149%	1
604	2/18/2013	28	74390	4.00	12.57	5920	148%	1
605		0		4.00	12.57			

Remarks:

Copies to:

Reported by: [signature]
Kent Seegmiller
Concrete Laboratory Manager

NORTECH Geotechnical/Civil Consultants, Ltd.

FIELD CONSTRUCTION INSPECTION REPORT

PROJECT PSC Environmental JOB NO. 14441-28C

LOCATION 2095 Newlands Drive, Fernley, Nevada REPORT NO. 4

CONTRACTOR L & H Concrete WEEK ENDING 02-16-13

Work Description

February 11 - On site for epoxy inspection on anchor bolts for base plates (support tanks) for pad T5 and 307. Anchor bolts (1") and epoxy were placed in accordance with structural engineered drawings. Holes were drilled to proper embed depth of 9" and cleaned out thoroughly. (MSV)

PROCESS PIPING INSPECTION FORM

Philip Services Corporation / 21 EMI
PSC Fernley Facility
2095 Newlands Drive East
Fernley, NV 89408
(775)575-2760

Tank Number: T-5

Date Inspected: April 3, 2013

Fill Line Assembly:

Number of Fill Line Assemblies: 4 Fill Line Assemblies

Description: There are 4 fill line assemblies which includes 3 assemblies above the tank, and 1 assembly on the side of the tank. The bulkhead fitting on top of tank, and the bulkhead fitting and valve connection of the side of the tank, are the only permanent piping in the fill line assemblies. A temporary fill line is attached to each fill line assembly. There was no damage to the process pipe connection or to the tank shell. No evidence of leaking found. The permanent piping is secured and stable.

Discharge Line Assembly:

Number of Discharge Line Assemblies: 2 Discharge Line Assemblies

Description: The bulkhead fitting to the threaded valve connection is the only permanent piping in the discharge line assembly. A temporary discharge line is attached to the valve connection. There was no damage to the process piping connection or to the tank shell. No evidence of leaking found. The permanent piping is secured and stable.

INSPECTOR: Brian [signature] **DATE:** April 3, 2013

Tank Data Sheet

RCRA Regulated? YES

Tank Location: DETOX ROOM

Tank Name: TREATMENT TANK

Tank Numbers: T-6

Process Description: NEUTRALIZATION, OXIDIZER, CYANIDE/SULFIDE TREATMENT

Vessel Fluid: AQUEOUS-BASED WASTE LIQUIDS

Specific Gravity: <1.40

Freeboard At Working Vol (ft cubed): 0' 7"

Normal Operating Pressure: ATMOSPHERIC

Temperature (F°) AMBIENT

	Material	Thickness	Type
Bottom	CARBON STEEL PLATE	1/4" NOMINAL	FLAT
Shell	CARBON STEEL PLATE	1/4" NOMINAL	Straight
Roof	CARBON STEEL PLATE	Steel Sheet	Flat

Working Volume (USG):	7,580 Gallons	Insulation:	NONE
Nominal Volume (USG):	8,100 Gallons	Method of Construction:	WELDED STEEL
Tank I.D. (ft):	8'-0" x 16'-0"	Tank Height or Length (ft):	8' - 6"
Design Code Used:	Unknown	Date In Service:	Unknown - est. 1989

Anchorage: BOLTED TO CONCRETE. Anchorage designs per 2006 IBC.

Connections:

Item No:	Size (In.)	Gasket	Description
1	4"	Viaton	drain
2			
3			
4			
5			
6			
7			
8			
9			
10			
11			
12			
13			
14			
15			

Tank Sketch:

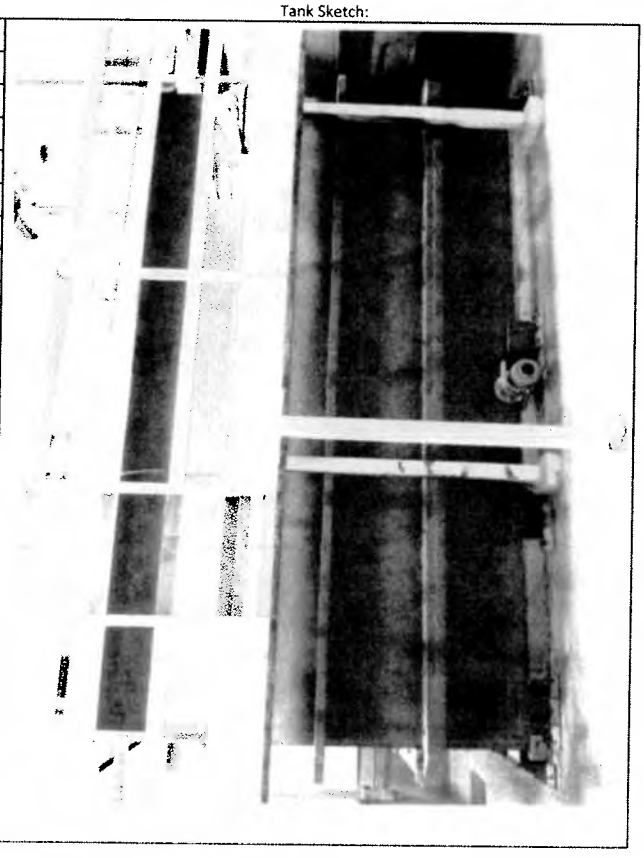

Interior Coating: VersaFlex LC-25 Lock Coat, VT-40 Finish Coat, FSS50 DM Spray Polyurea

Exterior Coating: Basecoat epoxy, Topcoat Polyurethane enamel

Tank Mfger: Paramount Fabricators

Remarks:

tobey wade
STRUCTURAL ENGINEERS

June 11, 2013
Project No. R405-06-13

Ms. Tracy Buono
Facility/Operations Manager
PSC FERNLEY FACILITY
2095 Newlands Drive East
Fernley, NV 89408

RE: TANK T-6 INTERIM CERTIFICATION

Dear Ms. Buono:

In accordance with the Fernley Facility Amended Tank Replacement Plan dated December 17, 2012, and Appendix D-6 of the pending July 2012 RECRA Permit, each new tank is required to be certified by Independent Registered Professional Engineers (IRPE's) prior to being placed into service. This letter has been prepared to document the evaluation of Tank T-6 as performed by Tobey-Wade Consulting.

It should be noted that Tank T-6 currently has permanent bulkhead fittings for connection of temporary fill and discharge lines. The permanent process piping servicing Tank T-6 will be installed in Phase 3 as outlined in the above-referenced documents. Accordingly, this certification is being provided as an interim certification. Final certification of Tank T-6 will be provided after the permanent piping and all other associated permanent systems have been installed and inspected.

Background

Tank T-6 is a rectangular flat-bottom welded carbon steel tank as fabricated by Paramount Fabricators. Tank T-6 has a working capacity of 7,580 gallons with a corresponding 7 inch freeboard.

NEVADA OFFICE
648 LANDER STREET ■ RENO, NEVADA 89509 ■ TEL: (775) 324.7757 ■ FAX: (775) 324.7797

Findings

Based on our evaluation, the following systems are hereby certified as being in compliance with the Amended Tank Replacement plan:

- Tank T-6 has sufficient strength to contain the proposed waste materials without rupturing.
- Tank T-6 is situated on a reinforced concrete foundation system which is capable of adequately supporting the tank and its contents under static and dynamic conditions.
- Tank T-6 is located in an area with sufficient secondary containment as required by 40 CFR Ch. I, 264.193.
- Tank T-6 is stabile against overturning when subjected to loads based on 2006 International Building Code level seismic events.
- Tank T-6 is anchored to prevent sliding when subjected to site-specific 2006 International Building Code level seismic events.
- The process piping fill and discharge connections have been inspected and found to be undamaged and with no evidence of leakage. The piping connections are adequately attached to the tank to prevent displacement during an earthquake. The associated Process Piping inspection form is attached.
- Special Inspection of the anchor plate welding and epoxy anchor bolt installation was performed as required by the International Building Code. A copy of the Special Inspection report is attached.
- Tank T-6 has been subjected to a 24-hour leak test and found to be watertight. The Tank Leakage Test results are included in the Tank Inspection Form, copy attached.
- The exterior of Tank T-6's shell wall has been inspected and found to be in good condition with only a few minor scratches. The Tank Shell Inspection results are included in the Tank Inspection Form, copy attached.

Tobey-Wade Consulting designed the anchorage system, witnessed the tank leakage test and conducted the tank shell inspection, under my direct supervision. Special Inspections were performed by inspectors from Nortech Consultants.

Certification Statement

I certify under penalty of law that this report and all attachments were prepared under my direction and supervision in accordance with a system developed to assure that qualified personnel properly gather and evaluate the information submitted. Based on my inquiry of the person or persons who manage the system or those persons directly responsible for gathering the information, the information, submitted is, to the best of my knowledge and belief, true, accurate, and complete. I am aware that there are significant penalties for submitting false information, including the possibility of fines and imprisonment for knowing violations.

This report has been prepared in accordance with acceptable engineering practices and is subject to the assumptions and limitations stated in the report. Also note that this certification covers the aforementioned aspects of Tank T-6 only.

Please feel free to contact me at your convenience should you have any questions relating to our findings.

Sincerely,
TOBEY-WADE CONSULTING

Terrence R. Tobey

TERRENCE R. TOBEY, P.E., S.E.
Principal Structural Engineer

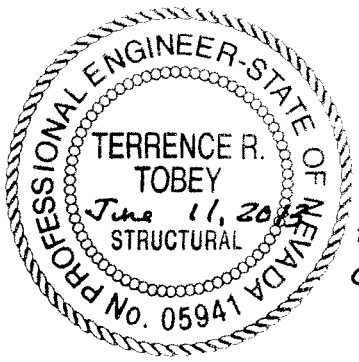

Exp. 6.30.14

TANK INSPECTION FORM

OWNER: Philip Services Corporation / 21 EMI
PSC Fernley Facility
2095 Newlands Drive East
Fernley, NV 89408
(775)575-2760

TANK NO.: T-6

TANK SHELL INSPECTION

Date Inspected: June 10, 2013

Findings: Tank Shell has a few Scratches. Tank Shell is in good condition

TANK ANCHORAGE STRUCTURAL OBSERVATION

Type of Anchorage System: Per Sheet TA1.0 Job #: R405-09-13 by Tobey Wade Consulting

Date Inspected: May 29, 2013

# of Anchor Plates/Tie-downs: 16 Plates / 0 Tie Downs

AB Type, Diameter, Spacing and Number/plate: } Anchorage Per Sheet TA1.0 Job Number R405-09-13 by Tobey Wade Consulting (Date: May 2, 2013)

Size of Anchor Plate & Contact with Tank:

Edge Distances: 24" Min.

Special Inspection Completed? Yes

TANK LEAKAGE TEST

Date Filled: June 10, 2013 Water Level below Inspection Hatch: 18 3/4" (Top of Tank

Date of Re-inspection: June 11, 2013 Water Level below Inspection Hatch: 18 3/4"

Shell Leakage? NO / NO

Leakage on Floor/Drain Pan at Manifold? NO / NO

INSPECTOR: Brian [signature] **DATE:** May 29, 2013

INSPECTOR: Brian [signature] **DATE:** June 10, 2013
June 11, 2013

PROCESS PIPING INSPECTION FORM

Philip Services Corporation / 21 EMI
PSC Fernley Facility
2095 Newlands Drive East
Fernley, NV 89408
(775)575-2760

Tank Number: T-6

Date Inspected: June 10, 2013

Fill Line Assembly:

Number of Fill Line Assemblies: 3 Fill Line Assemblies

Description: Three bulkhead fittings at the top of the tank are the only permanent piping in the fill line assembly. Temporary fill lines are attached to the bulkhead fitting. There was no damage to the process pipe connection or to the tank shell. No evidence of leaking found. The permanent piping is secured and stable.

Discharge Line Assembly:

Number of Discharge Line Assemblies: 1 Discharge Line Assembly

Description: A bulkhead fitting at the bottom of the tank is the only permanent piping in the discharge line assembly. There was no damage to the process piping connection or to the tank shell. No evidence of leaking found. The permanent piping is secured and stable.

INSPECTOR: Brian [signature] **DATE:** June 10, 2013

NORTECH Geotechnical/Civil Consultants, Ltd.

FIELD CONSTRUCTION INSPECTION REPORT

PROJECT PSC Environmental JOB NO. 14441-28C

LOCATION 2095 Newlands Drive, Fernley, Nevada REPORT NO. 12

CONTRACTOR L & H Concrete WEEK ENDING 05-18-13

Work Description

May 15 - On site for epoxy inspection on vertical rebar dowels for tank slab (T4). Holes were drilled to proper embed depth (4 inches) and were cleaned out thoroughly. Epoxy and dowels (vertical) were placed in accordance with structural details on sheet TS1.2 on approved plans. I also inspected epoxy and anchor bolts for tank pad 307 for cat walk. Holes were drilled to proper embed depth (5 inches) and cleaned out thoroughly. Bolts (½ inch) and epoxy were placed in accordance with structural details on sheet DWC 5.0 on approved plans. (MSV)

May 16 - Inspected steel reinforcement in slab for tank 4. Rebar has been placed in accordance with details from sheet TS1.2 on approved plans. I remained on site for concrete pour of the T4 slab. I sampled concrete and performed one passing slump test and cast one set of four cylinders. Temperature of the 4000 psi mix was 66 degrees. Cylinders have been stored in a cure box for initial curing and over night protection. NOTE: Contractor added one gallon of plasticizer to 3-1/2 yard load for workability. (MEV)

May 17 - Inspected placement of 32 1\2" x 4" embedment all thread anchor bolts at seismic plate to slab connections at tank 6. Contractor has drilled holes to proper embed depths and has cleaned holes thoroughly with an air compressor and brush (wire). I observed placement of bolts and epoxy. Project was completed in accordance with detail 5/TA1.0 on approved plans. I also inspected welding of seismic plate to tank and seismic plate to continuity plate connections (16 locations) at tank 6. Welding has been completed in accordance with detail 4/TA1.0 on approved plans and AWS specifications. (MEV)

RLK Coatings
Larry Kritsch
(661) 366-5460

This is the process used on the tank application in Fernley NV for T-6 and the new tank.

Applied date: 5-27-2013

Project: T-6 square tank 8' x 16' square tank 432 sq ft including top flange. Base coat 80 mils VersaFlex DM-50, VersaFlex LC-25 tie coat, 2 coats VT-40 top coat. Tank was sprayed at 9:30 a.m. on 5-27-2013. Tank surface temp was 73 degrees, humidity was 28 degrees, dew point was 45 degrees. Preparation procedures as follows: surface was wet blasted with a combination of water and hold tight to hold down dust while eliminating surface contaminants such as salts, sulfates, nitrates, etc. A blast media of 8-20 and 30-16 was used to achieve a surface profile of 3.2-5.7 to a white metal finish.

Tank was primed then sprayed with polyurea. Mil thickness ran from 83-120 mils checked at 4 points on each side. Coating was checked with Tinker and Razor spark tester set at 9000 volts. Several pinholes were detected then corrected by applying more polyurea and given a final check. Polyurea was sprayed at 2750 psi using a PMC gun with an 00 chamber. A single coat of LC-25 was then applied at an average of 6-8 mils. Two top coats of VT-40 was then applied for a total thickness of 20-25 mils again checked at 4 locations on each wall.

VersaFlex VT-40 Chemical Resistance Chart

Product Rating Key:

A = little or no effect
B = minor to moderate effect
C = severe effect, not recommended

T = no data, likely to be compatible
X = no data, not likely to be compatible

Chemical	Rating	Chemical	Rating
Acetaldehyde	C	Amyl acetate	C
Acetic acid (30%)	A	Amyl alcohol	A (212°F)
Acetic acid (20%)	A	Aniline	A-B
Acetic acid (glacial)	C	Aniline	B (158°F)
Acetic anhydride	C	Aniline	C (300°F)
Acetone	C	ASTM Oil #1	A (300°F)
Acetylene	A	ASTM Oil #3	A (300°F)
Aluminum chloride solutions	A	ASTM reference fuel A	A
Aluminum sulfate solutions	A	ASTM reference fuel B	A
Ammonia, anhydrous	C	ASTM reference fuel C	A
Ammonium chloride solutions	A	Asphalt	A (400°F)

Chemical	Rating	Chemical	Rating
Barium hydroxide solutions	A	Boric acid solutions	A
Beer	A	Bromine, anhydrous liquid	A (212°F)
Benzaldehyde	C	Butane	A
Benzene	B (158°F)	Butyl acetate	C
Benzoyl chloride	B	Butyraldehyde	C
Borax solutions	A	Butyric acid	T

Chemical	Rating	Chemical	Rating
Calcium bisulfite solutions	A	Chloroacetic acid	C
Calcium chloride solutions	A	Chlorobenzene	A
Calcium hydroxide solutions	A	Chloroform	A
Calcium hypochlorite, 5%	A	Chlorosulfonic acid	C
Calcium hypochlorite, 20%	B (158°F)	Chromic acid, 10-50%	A
Carbon bisulfide	A	Citric acid solutions	A
Carbon dioxide	A	Copper chloride solutions	A
Carbon tetrachloride	B (158°F)	Copper sulfate solutions	A
Castor oil	A	Cottonseed oil	A (300°F)
Chlorine gas, dry	A (212°F)	Creosote oil	A (212°F)
Chlorine gas, wet	A	Cumene	A (200°F)

Chemical	Rating	Chemical	Rating
Dibutyl phthalate	B	Dowtherm A	A (212°F)
Diethyl sebacate	B	Dowtherm A	B (400°F)
Dioctyl phthalate	B		

Chemical	Rating	Chemical	Rating
Epichlorohydrin	C (212°F)	Ethylene dichloride	A-B (120°F)
Ethyl acetate	C	Ethylene glycol	A (250°F)
Ethyl alcohol	A	Ethylene oxide	C (158°F)
Ethyl chloride	A	Exxon 2380 turbo oil (lube)	A (392°F)
Ethyl ether	B		

Chemical	Rating	Chemical	Rating
Ferric chloride solutions	A	Freon -22	C
Fluosilicic acid	T	Freon -22	X (130°F)
Formaldehyde, 40%	A	Freon -113	A
Formic acid	C (158°F)	Freon -113	T (130°F)
Freon -11	B	Freon -114	A
Freon -11	T (130°F)	Freon -114	T (130°F)
Freon -12	A-B	Furfural	C (158°F)
Freon -12	B (130°F)	Fyrquel 220 (hydraulic fluid)	A (212°F)

top of page

	Rating	Chemical	Rating
Gasoline	A	Glycerin	A (250°F)
Glue	A		

Chemical	Rating	Chemical	Rating
n-Hexane	A	Hydrofluoric acid, 48%	A (212°F)
Hydrazine	C	Hydrofluoric acid, 75%	B (158°F)
Hydrochloric acid, 20%	A	Hydrofluoric acid, anhydrous	A
Hydrochloric acid, 20%	A (230°F)	Hydrogen	A
Hydrochloric acid, 37%	A (158°F)	Hydrogen peroxide, 90%	A
Hydrochloric acid, 37%	B (230°F)	Hydrogen peroxide, 90%	C (270°F)
Hydrocyanic acid	A	Hydrogen sulfide	B (270°F)

Chemical	Rating	Chemical	Rating
Isooctane	A	Isopropyl ether	C
Isopropyl alcohol	A		

Chemical	Rating	Chemical	Rating
JP-4	A (400°F)	JP-6	A (100°F)
JP-5	A (400°F)	JP-6	B (550°F)

Chemical	Rating	Chemical	Rating
Kerosene	A (158°F)	Kerosene	B (400°F)

Chemical	Rating	Chemical	Rating
Lacquer solvents	C	Linseed oil	A
Lactic acid	A	Lubricating oils	A (158°F)

Chemical	Rating	Chemical	Rating
Magnesium chloride solutions	A	Methyl ethyl keton	C
Magnesium hydroxide solutions	A	Methylene chloride	B (100°F)
Mercuric chloride solutions	A	Mineral oil	A
Mercury	A	Mobile XRM 206A (aircraft lube)	A (350°F)
Methyl alcohol	A-B		

Chemical	Rating	Chemical	Rating
Naphtha	A (150°F)	Nitric acid, 70%	A
Naphthalene	A (176°F)	Nitric acid, 70%	B (100°F)
Nitric acid, 10%	A	Nitric acid, red fuming	B
Nitric acid, 30%	A	Nitric acid, red fuming	C (158°F)
Nitric acid, 60%	A	Nitrobenzene	B

Chemical	Rating	Chemical	Rating

Oleic acid	B	Oleum (red fuming sulfuric acid)	B (140°F)

Chemical	Rating	Chemical	Rating
Palmitic acid	A	Pickling solution (20% nitric, 4% HF)	A
Perchloroethylene	A (212°F)	Pickling solution (17% nitric, 4% HF)	A
Phenol	A (212°F)	Pickling solution (20% nitric, 4% HF)	C (225°F)
Phenol	B (300°F)	Picric acid	A
Phosphoric acid, 20%	A	Potassium dichromate solutions	A
Phosphoric acid, 60%	A (212°F)	Potassium hydroxide solutions	A
Phosphoric acid, 70%	A	Pydraul 312°C	A
Phosphoric acid, 85%	A	Pyridine	C

Chemical	Rating	Chemical	Rating
QF1-2023 (silicone brake fluid)	A (392°F)		

Chemical	Rating	Chemical	Rating
SAE #10 Oil	A	Stannic chloride	A
Sea water	A	Stannous chloride, 15%	A
Shell turbine oil 307	B (392°F)	Stearic acid	T
Silicone grease	A	Styrene	A
Skydrol 500	C	Sulfur, molten	A (250°F)
Skylube 450	C (392°F)	Sulfur dioxide, liquid	A
Soap solutions	A	Sulfur dioxide, gas	A
Sodium chloride solutions	A	Sulfur trioxide	A
Sodium dichromate, 20%	A	Sulfuric acid, up to 5%	A
Sodium hydroxide, 20%	A	Sulfuric acid, 5-10%	A
Sodium hydroxide, 46%	A	Sulfuric acid, 10-50%	A
Sodium hydroxide, 46%	C (100°F)	Sulfuric acid, 50-80%	A
Sodium hydroxide, 50%	C	Sulfuric acid, 60%	A (250°F)
Sodium hydroxide, 73%	C	Sulfuric acid, 90%	A (158°F)
Sodium hypochlorite, 5%	A	Sulfuric acid, 95%	A
Sodium hypochlorite, 20%	B (158°F)	Sulfuric acid, 95%	A (158°F)
Sodium peroxide solutions	A	Sulfuric acid, fuming 20% oleum	A
Soybean oil	A (250°F)	Sonoco XS-820 (EP lube)	A (300°F)

Chemical	Rating	Chemical	Rating
Tannic acid, 10%	A	Trichlorethylene	B (158°F)
Tartaric acid	A	Tricresyl phosphate	A (300°F)
Tetrahydrofuran	C	Triethanolamine	C
Toluene	B (100°F)	Trisodium phosphate solutions	A
Tributyl phosphate	C (212°F)	Tung Oil	A
Trichlorethylene	A	Turpentine	A (158°F)

Chemical	Rating	Chemical	Rating
Xylene	A	Zinc chloride solutions	A
Xylene	A (212°F)		

Aromatic Chemical Resistance-

VersaFlex INCORPORATED

R=Recommended
C=Recommended Conditionally (washdown within 1 hour of spillage)
N=Not Recommended
1=Suitable for immersion and/or splash and spillage conditions
2=Suitable for occasional or intermittent contact for up to 72 hours

Test Procedure: **ASTM D3912** 25°C Exceeds 1 Year

Test Media	
Acetic Acid 10%	C
Ammonium Hydroxide 10%/20	R
Diesel Fuel	R
Gasoline	R
Hydraulic Fluid	R
Hydrochloric Acid 5%/10%	R
Methanol	R
Motor Oil	R
MTBE	R
MTBE/Gasoline 5%	R
NaCl/Water 10%	R
Phosphoric Acid 10%	R
Potassium Hydroxide 10%/20%	R
Sodium Hydroxide 10%/20%/50%	R
Sugar/Water 10%	R
Sulfuric Acid 5%/10%	R
Skydrol	2
Toluene	C
Water	R
2-Methylbutane	R

Test Procedure: **ASTM B117**, after 1000 hours

Test	Result
Blistering, Bare Steel	None
Corrosion from Scribe,mm	4.0
Adhesion, psi, Elcometer	>2000

Note: Applied at 2-mil blast profile, KTA-Tator panels. No primer.

Test Procedure: **ASTM D1308** 25°C Exceeds 1 Year

Test Media	
Acetone	C
Antifreeze	R
Benzene	R
Benzoic Acid	R
Butyl Alcohol	R
Butyl Cellosolve	R
Carbon Dioxide	R
Calcium Hypochlorite	N
Chlorine (5000 ppm in water)	2
Citric Acid	R
Cylloexanol	R
Dichloroacetic Acid	C
Dimethyl Formamide	N
Ethanol	2
Ethylene Glycol	1
Gasoline	R
Hexane	R
Hydraulic Oil	R
Lactic Acid 10%	1
Methylene Chloride	C
Methyl Ethyl Ketone	C
Methanol	R
Mineral Spirits	R
Monobutyl Ether	R
Nitric Acid 20%	C
Phenol	2
Skydrol	2
Sodium Bicarbonate	R
Sodium Chloride	R
Sodium Hydroxide 50%	R
Sodium Hypochlorite 10%	2
Stearic Acid	R
Sulfuric Acid 70%	N
Trichloroethylene	C
Trisodium Phosphate	R
Toluene	C
Vinegar	R
Xylene	C

Test Procedure: **ASTM D 5322**

Jet Fuel A	R

Aromatic Chemical Resistance-

VersaFlex INCORPORATED

R=Recommended
C=Recommended Conditionally (washdown within 1 hour of spillage)
N=Not Recommended
1=Suitable for immersion and/or splash and spillage conditions
2=Suitable for occasional or intermittent contact for up to 72 hours

Test Procedure: **ASTM D3912** 25°C
Exceeds 1 Year

Test Media	
Acetic Acid 10%	C
Ammonium Hydroxide 10%/20	R
Diesel Fuel	R
Gasoline	R
Hydraulic Fluid	R
Hydrochloric Acid 5%/10%	R
Methanol	R
Motor Oil	R
MTBE	R
MTBE/Gasoline 5%	R
NaCl/Water 10%	R
Phosphoric Acid 10%	R
Potassium Hydroxide 10%/20%	R
Sodium Hydroxide 10%/20%/50%	R
Sugar/Water 10%	R
Sulfuric Acid 5%/10%	R
Skydrol	2
Toluene	C
Water	R
2-Methylbutane	R

Test Procedure: **ASTM B117**, after 1000 hours

Test	Result
Blistering, Bare Steel	None
Corrosion from Scribe,mm	4.0
Adhesion, psi, Elcometer	>2000

Note: Applied at 2-mil blast profile, KTA-Tator panels. No primer.

Test Procedure: **ASTM D1308** 25°C Exceeds 1 Year

Test Media	
Acetone	C
Antifreeze	R
Benzene	R
Benzoic Acid	R
Butyl Alcohol	R
Butyl Cellosolve	R
Carbon Dioxide	R
Calcium Hypochlorite	N
Chlorine (5000 ppm in water)	2
Citric Acid	R
Cylloexanol	R
Dichloroacetic Acid	C
Dimethyl Formamide	N
Ethanol	2
Ethylene Glycol	1
Gasoline	R
Hexane	R
Hydraulic Oil	R
Lactic Acid 10%	1
Methylene Chloride	C
Methyl Ethyl Ketone	C
Methanol	R
Mineral Spirits	R
Monobutyl Ether	R
Nitric Acid 20%	C
Phenol	2
Skydrol	2
Sodium Bicarbonate	R
Sodium Chloride	R
Sodium Hydroxide 50%	R
Sodium Hypochlorite 10%	2
Stearic Acid	R
Sulfuric Acid 70%	N
Trichloroethylene	C
Trisodium Phosphate	R
Toluene	C
Vinegar	R
Xylene	C

Test Procedure: **ASTM D 5322**

Jet Fuel A	R

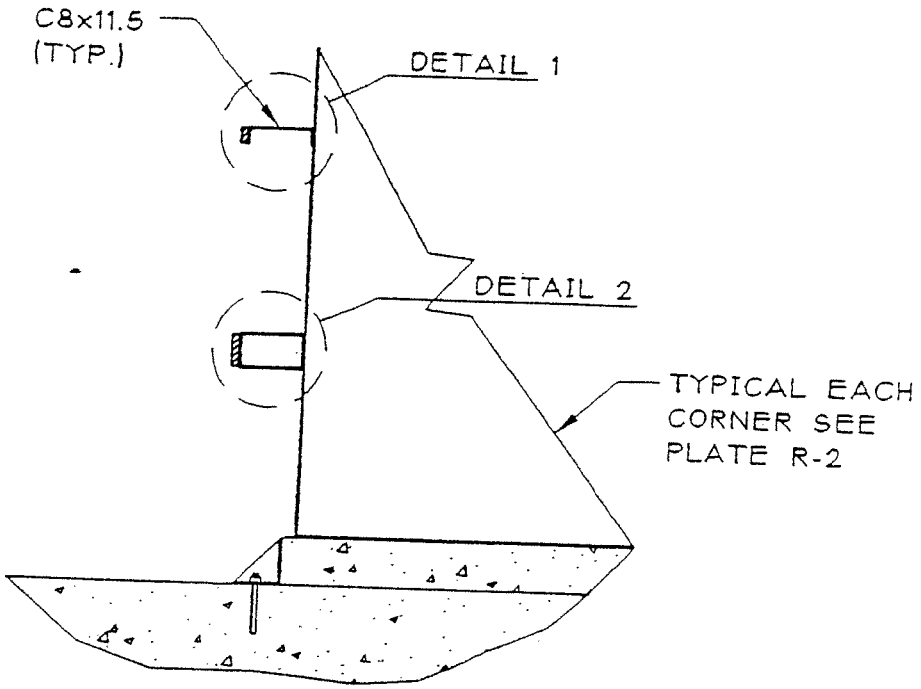

T.6 T.7
TANK RETROFIT

SCALE: 1/2"=1'-0"

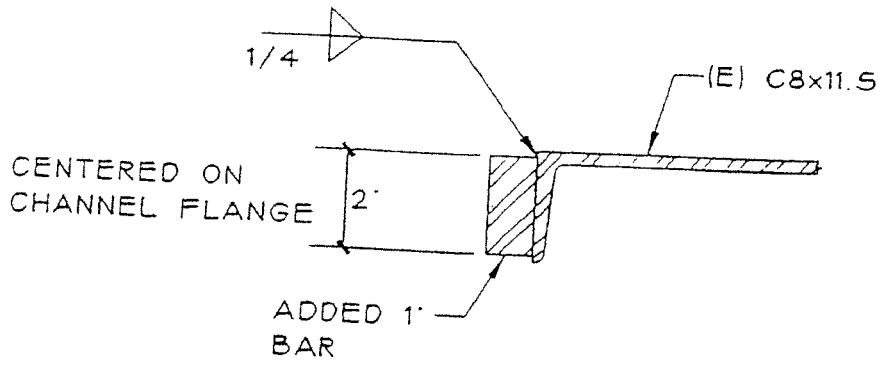

DETAIL 1

SCALE: 3"=1'-0"

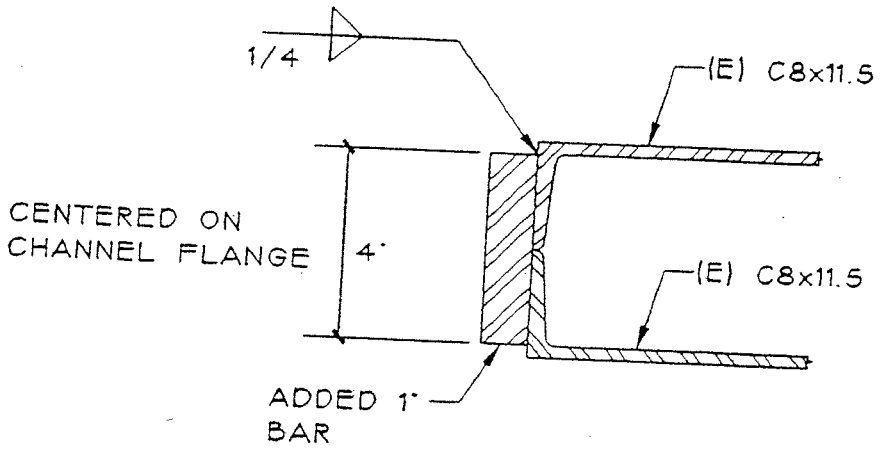

DETAIL2

SCALE: 3"=1'-0"

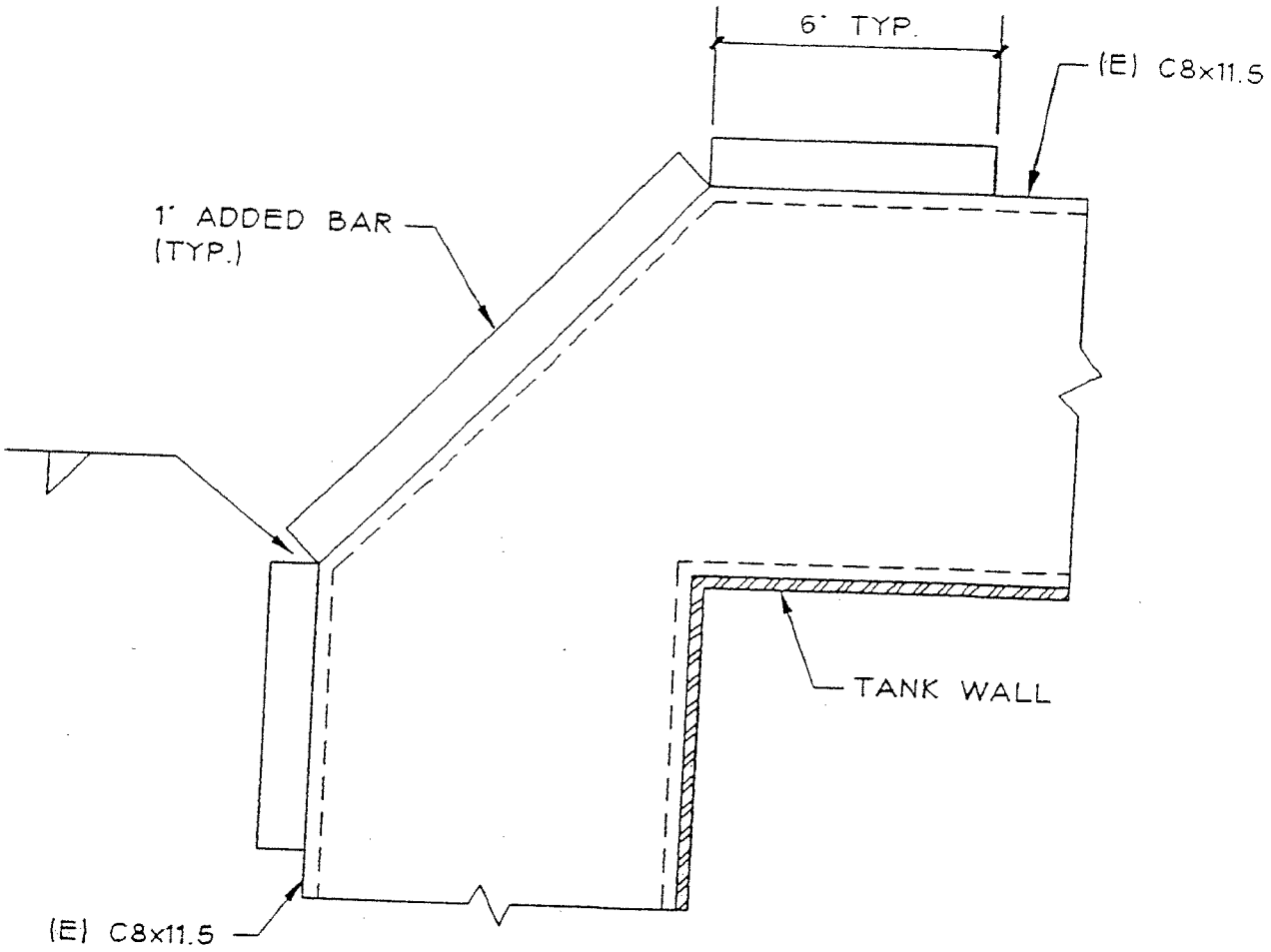

SECTION A-A

SCALE: 3"=1'-0"

SEA CONSULTING ENGINEERS
RENO/SPARKS, NEVADA
LAS VEGAS, NEVADA
PHOENIX, ARIZONA

ETICAM FACILITY
TYPICAL TANK CORNER SECTION

PROJECT NO. 1192-02-6
DATE: DECEMBER, 1993
PLATE R-3

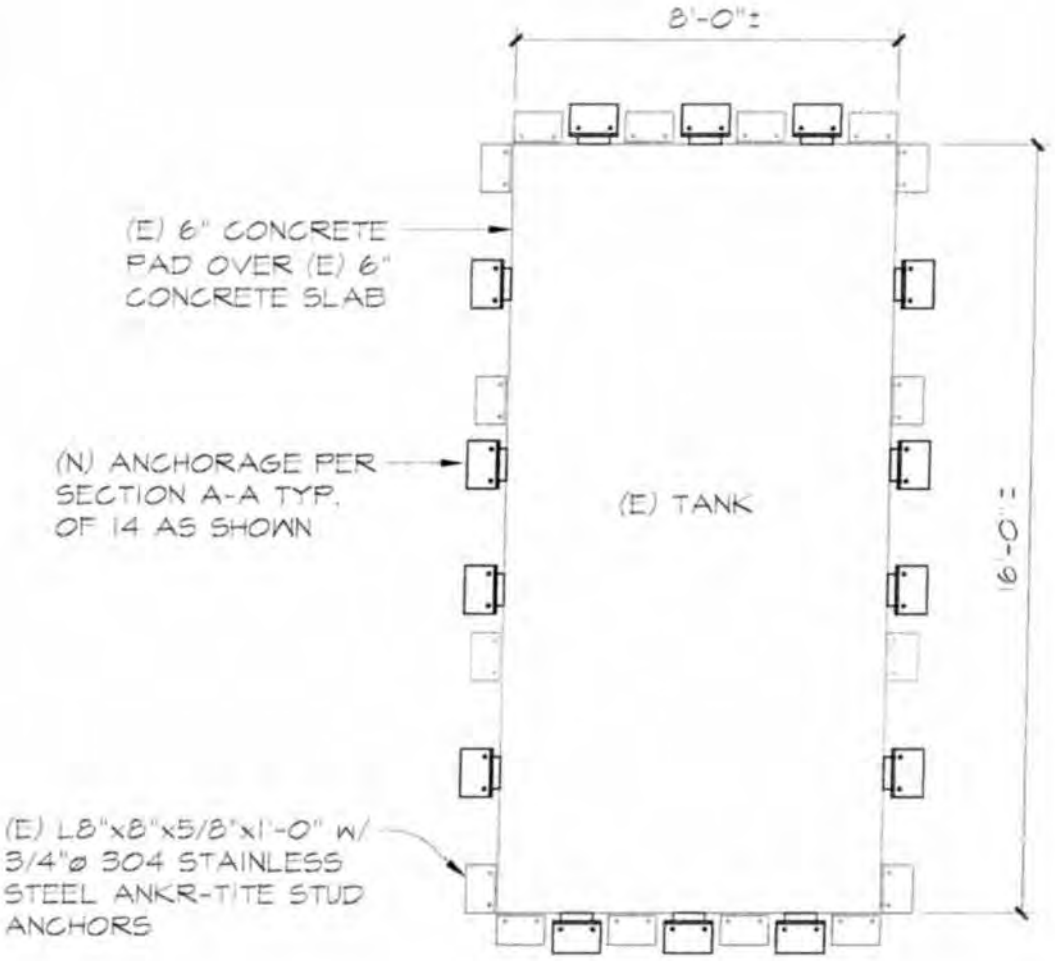

TANK NO's T-6 & T-7
ANCHORAGE PLAN

SCALE: 1/4"=1'-0"

tobey wade
CONSULTING
329 Flint Street
Reno, Nevada 89501
Tel. (775) 324-7757 Fax (775) 324-7797

PHILIP SERVICES CORPORATION
FERNLEY FACILITY
TANK NO.'s T-6 & T-7
FERNLEY, NEVADA

Project No.
R115-07-08

D-1

Date: April 15, 2009

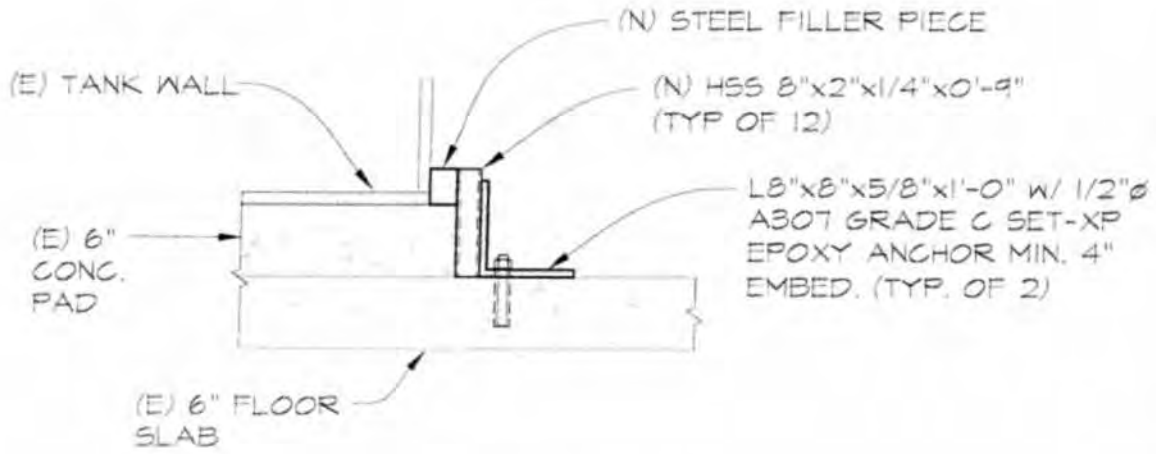

SECTION A-A

N.T.S.

tobey wade
CONSULTING
329 Flint Street
Reno, Nevada 89501
Tel. (775) 324-7757 Fax (775) 324-7797

PHILIP SERVICES CORPORATION
FERNLEY FACILITY
TANK NO.'s T-6 & T-7
FERNLEY, NEVADA

Project No.
R115-07-08

D-2

Date: April 15, 2009

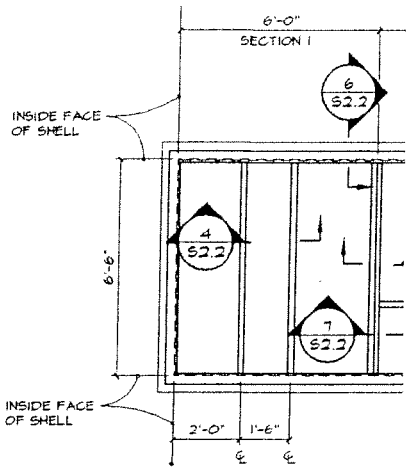

TANK LIE
NO. T-

1
S2.2

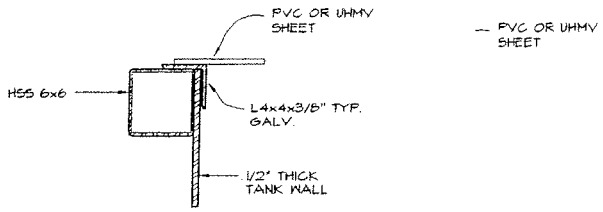

ECTION

3
S2.2
TYPICAL SECTION AT EDGE
SCALE: 1 1/2"=1'-0"

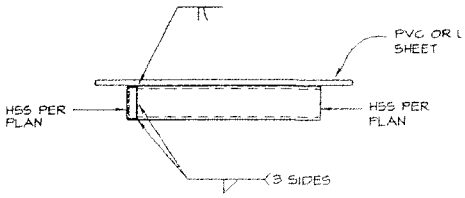

7
S2.2
BEAM TO BEAM CONNECTION
SCALE: 1 1/2"=1'-0"

ADDITION DATE 10/09/09

REVISION NUMBER 1

PRELIMINARY
NOT FOR CONSTRUCTION

© TOBEY WADE CONSULTING
THIS DRAWING IS THE PROPERTY OF TOBEY WADE CONSULTING, INC. IT IS FOR PUBLICATION OF THIS DRAWING, IN WHOLE OR IN PART, WITHOUT THE WRITTEN PERMISSION OF TOBEY WADE CONSULTING, IS STRICTLY PROHIBITED. THIS DRAWING IS NOT TO BE USED FOR ANY PROJECT OTHER THAN THE PROJECT FOR WHICH IT WAS PREPARED.

tobey wade
CONSULTING
329 Flint Street
Reno, Nevada 89501
Tel. (775) 324-7757 Fax (775) 324-7797

TANK NO. T-1, T-2 AND T-3 DETAILS

TANK REPLACEMENT PROJECT

PREPARED FOR
21ST CENTRY ENVIRONMENTAL MANAGEMENT OF NV

FERNLEY — LYON COUNTY — NEVADA

REVISIONS		
NO.	DESCRIPTION/DATE	BY

EXPIRES JUNE 30, 2010
TERRENCE R. TOBEY, S.E.

JOB NO	R115-07-08
DESIGNED	T.R.T.
DRAWN	S.R.M.
COMP	
CHECKED	
DATE	SEP. 21, 2009

S2.2

OF SHEETS

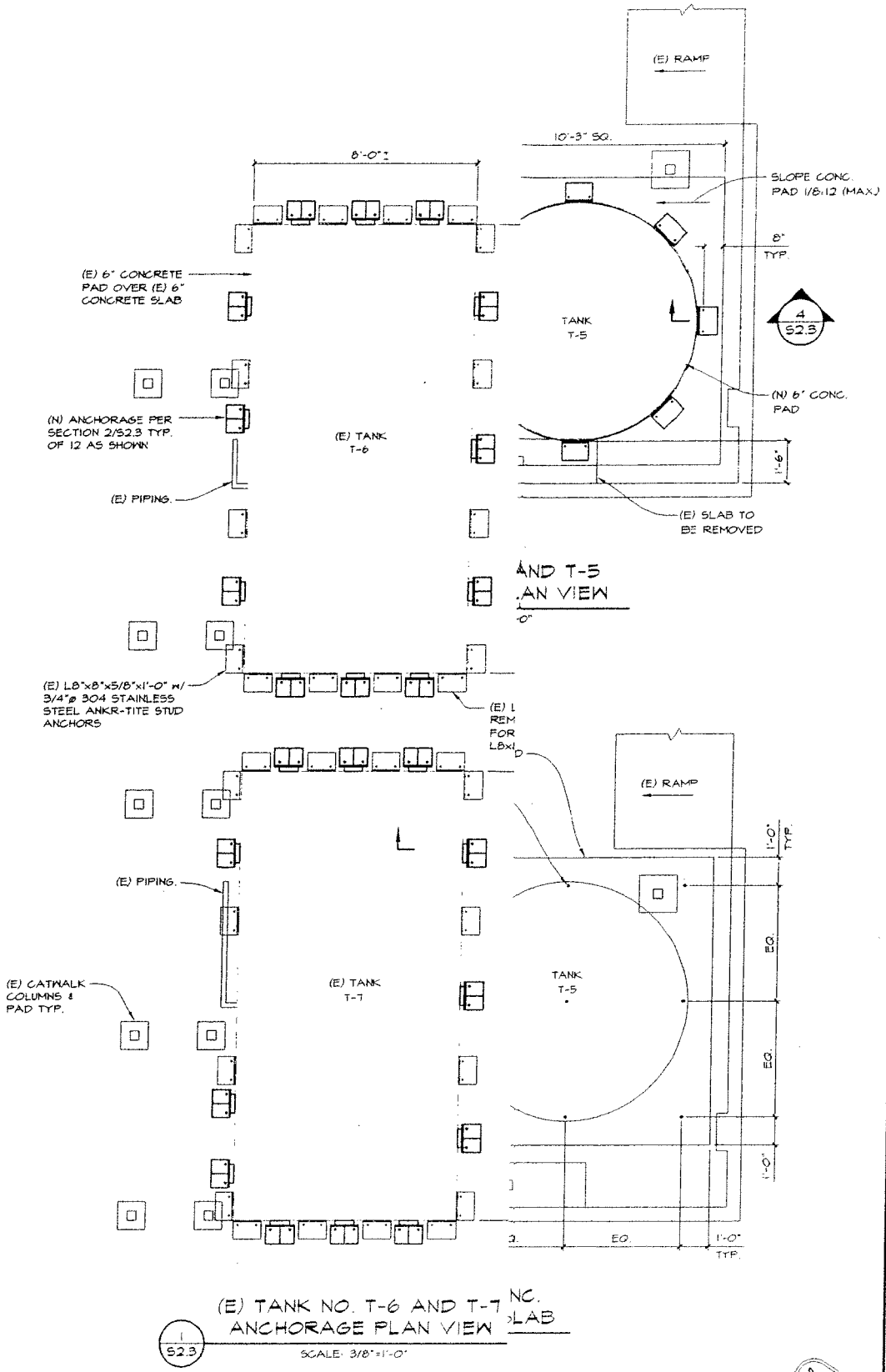

NOTES: 1. SEE DETAIL 2/S2.2 FOR (N) TANK LID PLAN

ADDITION DATE 10/09/09

REVISION NUMBER 1

PRELIMINARY NOT FOR CONSTRUCTION

©TOBEY WADE CONSULTING
THIS DRAWING IS THE PROPERTY OF TOBEY WADE CONSULTING. USE OR REPRODUCTION OF THIS DRAWING, IN WHOLE OR IN PART, WITHOUT THE WRITTEN PERMISSION OF TOBEY WADE CONSULTING IS STRICTLY PROHIBITED. THIS DRAWING IS NOT TO BE USED FOR ANY PROJECT OTHER THAN THE

tobey wade
CONSULTING
329 Flint Street
Reno, Nevada 89501
Tel. (775) 324-7757 Fax (775) 324-7797

TANK NO.'s T-4,T-5,T-6 AND T-7 PLANS AND ANCHORAGE DETAILS

TANK REPLACEMENT PROJECT

PREPARED FOR

21ST CENTRY ENVIRONMENTAL MANAGEMENT OF NV

FERNLEY — LYON COUNTY — NEVADA

REVISIONS		
NO.	DESCRIPTION/DATE	BY

EXPIRES JUNE 30, 2010

TERRENCE R. TOBEY, S.E.

JOB NO.	R115-07-08
DESIGNED	T.R.T.
DRAWN	S.R.M.
CORR.	
CHECKED	
DATE	SEP. 21, 2009

S2.3

OF SHEETS

tobey **wade**
STRUCTURAL ENGINEERS

August 7, 2013
Project No. R405-13-13

Ms. Tracy Buono
Facility/Operations Manager
PSC FERNLEY FACILITY
2095 Newlands Drive East
Fernley, NV 89408

RE: TANK T-6 CERTIFICATION

Dear Ms. Buono:

In accordance with the Fernley Facility Amended Tank Replacement Plan dated December 17, 2012, and Appendix D-6 of the pending July 2012 RECRA Permit, each new tank is required to be certified by Independent Registered Professional Engineers (IRPE's) prior to being placed into service. This letter has been prepared to document the evaluation of Tank T-6 as performed by Tobey-Wade Consulting.

Background

Tank T-6 is a pre-existing rectangular flat-bottom welded carbon steel tank as fabricated by Paramount Fabricators. Tank T-6 has a working capacity of 7,580 gallons with a corresponding 7 inch freeboard.

Findings

Based on our evaluation, the following systems are hereby certified as being in compliance with the Amended Tank Replacement plan:

- Tank T-6 has sufficient strength to contain the proposed waste materials without rupturing.
- Tank T-6 is situated on a reinforced concrete foundation system which is capable of adequately supporting the tank and its contents under static and dynamic conditions.
- Tank T-6 is located in an area with sufficient secondary containment as required by 40 CFR Ch. I, 264.193.

NEVADA OFFICE
648 LANDER STREET ■ RENO, NEVADA 89509 ■ TEL: (775) 324.7757 ■ FAX: (775) 324.7797

- Tank T-6 is stabile against overturning when subjected to loads based on 2006 International Building Code level seismic events.

- Tank T-6 is anchored to prevent sliding when subjected to site-specific 2006 International Building Code level seismic events.

- The process piping fill and discharge connections have been inspected and found to be undamaged and with no evidence of leakage. The piping connections are adequately attached to the tank to prevent displacement during an earthquake. The associated Process Piping inspection form is attached.

- Special Inspection of the anchor plate welding and epoxy anchor bolt installation was performed as required by the International Building Code. A copy of the Special Inspection report is attached.

- Tank T-6 has been subjected to a 24-hour leak test and found to be watertight. The Tank Leakage Test results are included in the Tank Inspection Form, copy attached.

- The exterior of Tank T-6's shell wall has been inspected and found to be in good condition with only a few minor scratches. The Tank Shell Inspection results are included in the Tank Inspection Form, copy attached.

Tobey-Wade Consulting designed the anchorage system, witnessed the tank leakage test and conducted the tank shell inspection, under my direct supervision. Special Inspections were performed by inspectors from Nortech Consultants.

Certification Statement

I certify under penalty of law that this report and all attachments were prepared under my direction and supervision in accordance with a system developed to assure that qualified personnel properly gather and evaluate the information submitted. Based on my inquiry of the person or persons who manage the system or those persons directly responsible for gathering the information, the information, submitted is, to the best of my knowledge and belief, true, accurate, and complete. I am aware that there are significant penalties for submitting false information, including the possibility of fines and imprisonment for knowing violations.

This report has been prepared in accordance with accepted engineering practices and is subject to the assumptions and limitations stated in the report. Also note that this certification covers the aforementioned aspects of Tank T-6 only.

Please feel free to contact me at your convenience should you have any questions relating to our findings.

Sincerely,
TOBEY-WADE CONSULTING

Terrence R. Tobey

TERRENCE R. TOBEY, P.E., S.E.
Principal Structural Engineer

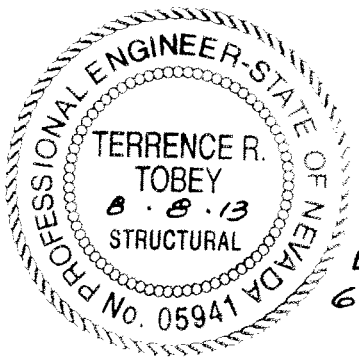

TANK INSPECTION FORM

OWNER: Philip Services Corporation / 21 EMI
PSC Fernley Facility
2095 Newlands Drive East
Fernley, NV 89408
(775)575-2760

TANK NO.: T-6

TANK SHELL INSPECTION

Date Inspected: June 10, 2013

Findings: Tank Shell has a Few Scratches. Tank Shell is in good condition

TANK ANCHORAGE STRUCTURAL OBSERVATION

Type of Anchorage System: Per Sheet TA1.0 Job #: R405-09-13 by Tobey Wade Consulting

Date Inspected: May 29, 2013

# of Anchor Plates/Tie-downs: 16 Plates / 0 Tie Downs

AB Type, Diameter, Spacing and Number/plate: } Anchorage Per Sheet TA1.0 Job Number R405-09-13 by Tobey Wade Consulting (Date: May 2, 2013)

Size of Anchor Plate & Contact with Tank: }

Edge Distances: 24" Min.

Special Inspection Completed? Yes

TANK LEAKAGE TEST

Date Filled: June 10, 2013 Water Level below Inspection Hatch: 18 3/4" (Top of Tank

Date of Re-inspection: June 11, 2013 Water Level below Inspection Hatch: 18 3/4"

Shell Leakage? NO / NO

Leakage on Floor/Drain Pan at Manifold? NO / NO

INSPECTOR: Brian [signature] **DATE:** May 29, 2013

INSPECTOR: Brian [signature] **DATE:** June 10, 2013
June 11, 2013

PROCESS PIPING INSPECTION FORM

Philip Services Corporation / 21 EMI
PSC Fernley Facility
2095 Newlands Drive East
Fernley, NV 89408
(775)575-2760

Tank Number: T-6

Date Inspected: June 10, 2013

Fill Line Assembly:

Number of Fill Line Assemblies: 3 Fill Line Assemblies

Description: Three bulkhead fittings at the top of the tank are the only permanent piping in the fill line assembly. Temporary fill lines are attached to the bulkhead fitting. There was no damage to the process pipe connection or to the tank shell. No evidence of leaking found. The permanent piping is secured and stable.

Discharge Line Assembly:

Number of Discharge Line Assemblies: 1 Discharge Line Assembly

Description: A bulkhead fitting at the bottom of the tank is the only permanent piping in the discharge line assembly. There was no damage to the process piping connection or to the tank shell. No evidence of leaking found. The permanent piping is secured and stable.

INSPECTOR: Brian [signature] **DATE:** June 10, 2013

NORTECH Geotechnical/Civil Consultants, Ltd.

FIELD CONSTRUCTION INSPECTION REPORT

PROJECT PSC Environmental JOB NO. 14441-28C

LOCATION 2095 Newlands Drive, Fernley, Nevada REPORT NO. 12

CONTRACTOR L & H Concrete WEEK ENDING 05-18-13

Work Description

May 15 - On site for epoxy inspection on vertical rebar dowels for tank slab (T4). Holes were drilled to proper embed depth (4 inches) and were cleaned out thoroughly. Epoxy and dowels (vertical) were placed in accordance with structural details on sheet TS1.2 on approved plans. I also inspected epoxy and anchor bolts for tank pad 307 for cat walk. Holes were drilled to proper embed depth (5 inches) and cleaned out thoroughly. Bolts (½ inch) and epoxy were placed in accordance with structural details on sheet DWC 5.0 on approved plans. (MSV)

May 16 - Inspected steel reinforcement in slab for tank 4. Rebar has been placed in accordance with details from sheet TS1.2 on approved plans. I remained on site for concrete pour of the T4 slab. I sampled concrete and performed one passing slump test and cast one set of four cylinders. Temperature of the 4000 psi mix was 66 degrees. Cylinders have been stored in a cure box for initial curing and over night protection. NOTE: Contractor added one gallon of plasticizer to 3-1/2 yard load for workability. (MEV)

May 17 - Inspected placement of 32 1\2" x 4" embedment all thread anchor bolts at seismic plate to slab connections at tank 6. Contractor has drilled holes to proper embed depths and has cleaned holes thoroughly with an air compressor and brush (wire). I observed placement of bolts and epoxy. Project was completed in accordance with detail 5/TA1.0 on approved plans. I also inspected welding of seismic plate to tank and seismic plate to continuity plate connections (16 locations) at tank 6. Welding has been completed in accordance with detail 4/TA1.0 on approved plans and AWS specifications. (MEV)

Tank Data Sheet

RCRA Regulated? YES

Tank Location: DETOX ROOM

Tank Name: TREATMENT TANK

Tank Numbers: T-7

Process Description: NEUTRALIZATION, OXIDIZER, CYANIDE/SULFIDE TREATMENT

Vessel Fluid: AQUEOUS-BASED WASTE LIQUIDS

Specific Gravity: <1.40

Freeboard At Working Vol (ft cubed): 0' 7"

Normal Operating Pressure: ATMOSPHERIC

Temperature (F°) AMBIENT

	Material	Thickness	Type
Bottom	CARBON STEEL PLATE	1/4" NOMINAL	FLAT
Shell	CARBON STEEL PLATE	1/4" NOMINAL	Straight
Roof	CARBON STEEL PLATE	Steel Sheet	Flat

Working Volume (USG):	7,580 Gallons	Insulation:	NONE
Nominal Volume (USG):	8,100 Gallons	Method of Construction:	WELDED STEEL
Tank I.D. (ft):	8'-0" x 16'-0"	Tank Height or Length (ft):	8' - 6"
Design Code Used:	Unknown	Date In Service:	Unknown - est. 1989

Anchorage: BOLTED TO CONCRETE. Anchorage designs per 2006 IBC.

Connections:

Item No:	Size (In.)	Gasket	Description
1	4"	Viaton	drain
2			
3			
4			
5			
6			
7			
8			
9			
10			
11			
12			
13			
14			
15			

Tank Sketch:

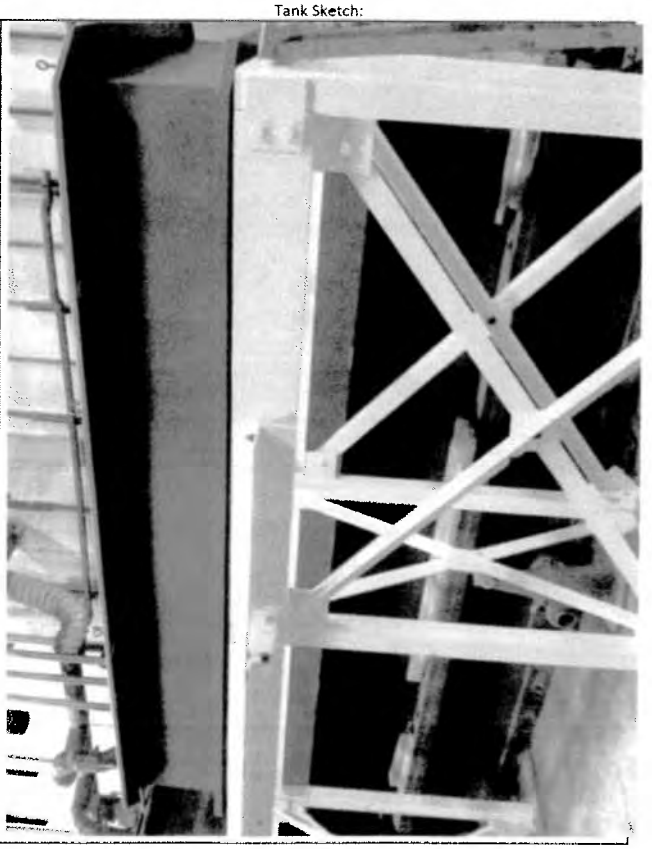

Interior Coating: VersaFlex LC-25 Lock Coat, VT-40 Finish Coat, FSS50 DM Spray Polyurea

Exterior Coating: Basecoat epoxy, Topcoat Polyurethane enamel

Tank Mfger: Paramount Fabricators

Remarks:

tobey wade
STRUCTURAL ENGINEERS

July 10, 2013
Project No. R405-06-13

Ms. Tracy Buono
Facility/Operations Manager
PSC FERNLEY FACILITY
2095 Newlands Drive East
Fernley, NV 89408

RE: TANK T-7 INTERIM CERTIFICATION

Dear Ms. Buono:

In accordance with the Fernley Facility Amended Tank Replacement Plan dated December 17, 2012, and Appendix D-6 of the pending July 2012 RECRA Permit, each new tank is required to be certified by Independent Registered Professional Engineers (IRPE's) prior to being placed into service. This letter has been prepared to document the evaluation of Tank T-7 as performed by Tobey-Wade Consulting.

It should be noted that Tank T-7 currently has permanent bulkhead fittings for connection of temporary discharge lines. The permanent process piping servicing Tank T-7 will be installed in Phase 3 as outlined in the above-referenced documents. Accordingly, this certification is being provided as an interim certification. Final certification of Tank T-7 will be provided after the permanent piping and all other associated permanent systems have been installed and inspected.

Background

Tank T-7 is a rectangular flat-bottom welded carbon steel tank as fabricated by Paramount Fabricators. Tank T-7 has a working capacity of 7,580 gallons with a corresponding 7 inch freeboard.

Findings

Based on our evaluation, the following systems are hereby certified as being in compliance with the Amended Tank Replacement plan:

- Tank T-7 has sufficient strength to contain the proposed waste materials without rupturing.
- Tank T-7 is situated on a reinforced concrete foundation system which is capable of adequately supporting the tank and its contents under static and dynamic conditions.
- Tank T-7 is located in an area with sufficient secondary containment as required by 40 CFR Ch. I, 264.193.
- Tank T-7 is stabile against overturning when subjected to loads based on 2006 International Building Code level seismic events.
- Tank T-7 is anchored to prevent sliding when subjected to site-specific 2006 International Building Code level seismic events.
- The exterior of Tank T-7's shell wall has been inspected and found to be in good condition with only a few minor scratches. The Tank Shell Inspection results are included in the Tank Inspection Form, copy attached.
- Tank T-7 has been subjected to a 24-hour leak test and found to be watertight. The Tank Leakage Test results are included in the Tank Inspection Form, copy attached.
- Special Inspection of the anchor plate welding and epoxy anchor bolt installation was performed as required by the International Building Code. A copy of the Special Inspection report is attached.
- The process piping discharge connections have been inspected and found to be undamaged and with no evidence of leakage. The piping connections are adequately attached to the tank to prevent displacement during an earthquake. The associated Process Piping inspection form is attached.

Tobey-Wade Consulting designed the anchorage system, witnessed the tank leakage test and conducted the tank shell inspection, under my direct supervision. Special Inspections were performed by inspectors from Nortech Consultants.

Certification Statement

I certify under penalty of law that this report and all attachments were prepared under my direction and supervision in accordance with a system developed to assure that qualified personnel properly gather and evaluate the information submitted. Based on my inquiry of the person or persons who manage the system or those persons directly responsible for gathering the information, the information, submitted is, to the best of my knowledge and belief, true, accurate, and complete. I am aware that there are significant penalties for submitting false information, including the possibility of fines and imprisonment for knowing violations.

This report has been prepared in accordance with accepted engineering practices and is subject to the assumptions and limitations stated in the report. Also note that this certification covers the aforementioned aspects of Tank T-7 only.

Please feel free to contact me at your convenience should you have any questions relating to our findings.

Sincerely,
TOBEY-WADE CONSULTING

Terrence R. Tobey

TERRENCE R. TOBEY, P.E., S.E.
Principal Structural Engineer

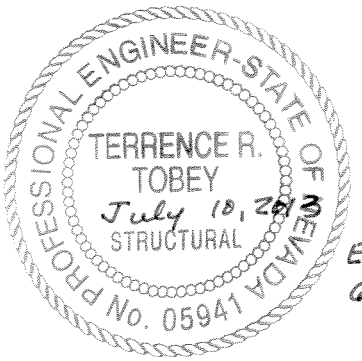

Expires
6.30.14

TANK INSPECTION FORM

OWNER: Philip Services Corporation / 21 EMI
PSC Fernley Facility
2095 Newlands Drive East
Fernley, NV 89408
(775)575-2760

TANK NO.: T-7

TANK SHELL INSPECTION

Date Inspected: July 8, 2013

Findings: Tank Shell in good Condition

TANK ANCHORAGE STRUCTURAL OBSERVATION

Type of Anchorage System: Per Sheet TA1.0 Job #: R405-09-13 by Tobey Wade Consulting

Date Inspected: July 8, 2013

# of Anchor Plates/Tie-downs: 16 Plates / 0 Tie Downs

AB Type, Diameter, Spacing and Number/plate: } Anchorage Per Sheet TA1.0 Job #: R405-09-13 by Tobey Wade Consulting (Dated May 2, 2013)

Size of Anchor Plate & Contact with Tank: }

Edge Distances: 24" min

Special Inspection Completed? Yes

TANK LEAKAGE TEST

Date Filled: July 8, 2013 — Water Level below Inspection Hatch: 6" (Top of Tank)

Date of Re-inspection: July 9, 2013 — Water Level below Inspection Hatch: 6"

Shell Leakage? No / No

Leakage on Floor/Drain Pan at Manifold? No / No

INSPECTOR: Brian [signature] **DATE:** July 8, 2013

INSPECTOR: Brian [signature] **DATE:** July 9, 2013

T-7
Special
Inspection

NORTECH Geotechnical/Civil Consultants, Ltd.

FIELD CONSTRUCTION INSPECTION REPORT

PROJECT PSC Environmental JOB NO. 14441-28C

LOCATION 2095 Newlands Drive, Fernley, Nevada REPORT NO. 16A

CONTRACTOR L & H Concrete WEEK ENDING 06-29-13

Work Description

June 27 - Inspected placement of 36 half inch epoxy set all-thread anchor bolts at cat-walk base plate to slab connections at tanks 4 & 5 and placement of 32 half inch epoxy set all-thread anchor bolts at base plate to slab connections at tank 7. Contractor has drilled holes to proper embed depths and has thoroughly cleaned holes with air compressor and wire brush. Project was completed in accordance with details from sheets S/TA1.0 + 6/S1.0 on approved plans. I also inspected welding of base plate/continuity plate to tank 7 and drainage flange plate to tank 7, (17 connections). All welding has been completed in accordance with detail 5/TA1.0 on approved plans and AWS specifications. I also inspected the existing welds of the crystalizer tank referred to in Note 1, detail 4/G52.0 of Engineers letter dated 6/26/12. The existing welds are in good condition and have no visible discontinuities and are in accordance with AWS specifications. (MEV)

PROCESS PIPING INSPECTION FORM

Philip Services Corporation / 21 EMI
PSC Fernley Facility
2095 Newlands Drive East
Fernley, NV 89408
(775)575-2760

Tank Number: T-7

Date Inspected: July 8, 2013

Fill Line Assembly:

Number of Fill Line Assemblies: 0 Fill Line Assemblies

Description:

Discharge Line Assembly:

Number of Discharge Line Assemblies: 1 Discharge Line Assembly

Description: A bulkhead fitting at the bottom of the tank is the only permanent piping in the discharge line assembly. There was no damage to the process piping connection or to the tank shell. No evidence of leaking found. The permanent piping is secured and stable.

INSPECTOR: Brian [signature] DATE: July 8, 2013

RLK Coatings
Larry Kritsch
(661) 366-5460

This is the process used on the tank application in Fernley NV for T-6 and the new tank.

Applied date: 5-27-2013

Project: T-6 square tank 8' x 16' square tank 432 sq ft including top flange. Base coat 80 mils VersaFlex DM-50, VersaFlex LC-25 tie coat, 2 coats VT-40 top coat. Tank was sprayed at 9:30 a.m. on 5-27-2013. Tank surface temp was 73 degrees, humidity was 28 degrees, dew point was 45 degrees. Preparation procedures as follows: surface was wet blasted with a combination of water and hold tight to hold down dust while eliminating surface contaminants such as salts, sulfates, nitrates, etc. A blast media of 8-20 and 30-16 was used to achieve a surface profile of 3.2-5.7 to a white metal finish.

Tank was primed then sprayed with polyurea. Mil thickness ran from 83-120 mils checked at 4 points on each side. Coating was checked with Tinker and Razor spark tester set at 9000 volts. Several pinholes were detected then corrected by applying more polyurea and given a final check. Polyurea was sprayed at 2750 psi using a PMC gun with an 00 chamber. A single coat of LC-25 was then applied at an average of 6-8 mils. Two top coats of VT-40 was then applied for a total thickness of 20-25 mils again checked at 4 locations on each wall.

VersaFlex VT-40 Chemical Resistance Chart

Product Rating Key:

A = little or no effect
B = minor to moderate effect
C = severe effect, not recommended

T = no data, likely to be compatible
X = no data, not likely to be compatible

Chemical	Rating	Chemical	Rating
Acetaldehyde	C	Amyl acetate	C
Acetic acid (30%)	A	Amyl alcohol	A (212°F)
Acetic acid (20%)	A	Aniline	A-B
Acetic acid (glacial)	C	Aniline	B (158°F)
Acetic anhydride	C	Aniline	C (300°F)
Acetone	C	ASTM Oil #1	A (300°F)
Acetylene	A	ASTM Oil #3	A (300°F)
Aluminum chloride solutions	A	ASTM reference fuel A	A
Aluminum sulfate solutions	A	ASTM reference fuel B	A
Ammonia, anhydrous	C	ASTM reference fuel C	A
Ammonium chloride solutions	A	Asphalt	A (400°F)

Chemical	Rating	Chemical	Rating
Barium hydroxide solutions	A	Boric acid solutions	A
Beer	A	Bromine, anhydrous liquid	A (212°F)
Benzaldehyde	C	Butane	A
Benzene	B (158°F)	Butyl acetate	C
Benzoyl chloride	B	Butyraldehyde	C
Borax solutions	A	Butyric acid	T

Chemical	Rating	Chemical	Rating
Calcium bisulfite solutions	A	Chloroacetic acid	C
Calcium chloride solutions	A	Chlorobenzene	A
Calcium hydroxide solutions	A	Chloroform	A
Calcium hypochlorite, 5%	A	Chlorosulfonic acid	C
Calcium hypochlorite, 20%	B (158°F)	Chromic acid, 10-50%	A
Carbon bisulfide	A	Citric acid solutions	A
Carbon dioxide	A	Copper chloride solutions	A
Carbon tetrachloride	B (158°F)	Copper sulfate solutions	A
Castor oil	A	Cottonseed oil	A (300°F)
Chlorine gas, dry	A (212°F)	Creosote oil	A (212°F)
Chlorine gas, wet	A	Cumene	A (200°F)

Chemical	Rating	Chemical	Rating
Dibutyl phthalate	B	Dowtherm A	A (212°F)
Diethyl sebacate	B	Dowtherm A	B (400°F)
Dioctyl phthalate	B		

Chemical	Rating	Chemical	Rating
Epichlorohydrin	C (212°F)	Ethylene dichloride	A-B (120°F)
Ethyl acetate	C	Ethylene glycol	A (250°F)
Ethyl alcohol	A	Ethylene oxide	C (158°F)
Ethyl chloride	A	Exxon 2380 turbo oil (lube)	A (392°F)
Ethyl ether	B		

Chemical	Rating	Chemical	Rating
Ferric chloride solutions	A	Freon -22	C
Fluosilicic acid	T	Freon -22	X (130°F)
Formaldehyde, 40%	A	Freon -113	A
Formic acid	C (158°F)	Freon -113	T (130°F)
Freon -11	B	Freon -114	A
Freon -11	T (130°F)	Freon -114	T (130°F)
Freon -12	A-B	Furfural	C (158°F)
Freon -12	B (130°F)	Fyrquel 220 (hydraulic fluid)	A (212°F)

top of page

	Rating	Chemical	Rating
Gasoline	A	Glycerin	A (250°F)
Glue	A		

Chemical	Rating	Chemical	Rating
n-Hexane	A	Hydrofluoric acid, 48%	A (212°F)
Hydrazine	C	Hydrofluoric acid, 75%	B (158°F)
Hydrochloric acid, 20%	A	Hydrofluoric acid, anhydrous	A
Hydrochloric acid, 20%	A (230°F)	Hydrogen	A
Hydrochloric acid, 37%	A (158°F)	Hydrogen peroxide, 90%	A
Hydrochloric acid, 37%	B (230°F)	Hydrogen peroxide, 90%	C (270°F)
Hydrocyanic acid	A	Hydrogen sulfide	B (270°F)

Chemical	Rating	Chemical	Rating
Isooctane	A	Isopropyl ether	C
Isopropyl alcohol	A		

Chemical	Rating	Chemical	Rating
JP-4	A (400°F)	JP-6	A (100°F)
JP-5	A (400°F)	JP-6	B (550°F)

Chemical	Rating	Chemical	Rating
Kerosene	A (158°F)	Kerosene	B (400°F)

Chemical	Rating	Chemical	Rating
Lacquer solvents	C	Linseed oil	A
Lactic acid	A	Lubricating oils	A (158°F)

Chemical	Rating	Chemical	Rating
Magnesium chloride solutions	A	Methyl ethyl keton	C
Magnesium hydroxide solutions	A	Methylene chloride	B (100°F)
Mercuric chloride solutions	A	Mineral oil	A
Mercury	A	Mobile XRM 206A (aircraft lube)	A (350°F)
Methyl alcohol	A-B		

Chemical	Rating	Chemical	Rating
Naphtha	A (150°F)	Nitric acid, 70%	A
Naphthalene	A (176°F)	Nitric acid, 70%	B (100°F)
Nitric acid, 10%	A	Nitric acid, red fuming	B
Nitric acid, 30%	A	Nitric acid, red fuming	C (158°F)
Nitric acid, 60%	A	Nitrobenzene	B

Chemical	Rating	Chemical	Rating

Oleic acid	B	Oleum (red fuming sulfuric acid)	B (140°F)

Chemical	Rating	Chemical	Rating
Palmitic acid	A	Pickling solution (20% nitric, 4% HF)	A
Perchloroethylene	A (212°F)	Pickling solution (17% nitric, 4% HF)	A
Phenol	A (212°F)	Pickling solution (20% nitric, 4% HF)	C (225°F)
Phenol	B (300°F)	Picric acid	A
Phosphoric acid, 20%	A	Potassium dichromate solutions	A
Phosphoric acid, 60%	A (212°F)	Potassium hydroxide solutions	A
Phosphoric acid, 70%	A	Pydraul 312°C	A
Phosphoric acid, 85%	A	Pyridine	C

Chemical	Rating	Chemical	Rating
QF1-2023 (silicone brake fluid)	A (392°F)		

Chemical	Rating	Chemical	Rating
SAE #10 Oil	A	Stannic chloride	A
Sea water	A	Stannous chloride, 15%	A
Shell turbine oil 307	B (392°F)	Stearic acid	T
Silicone grease	A	Styrene	A
Skydrol 500	C	Sulfur, molten	A (250°F)
Skylube 450	C (392°F)	Sulfur dioxide, liquid	A
Soap solutions	A	Sulfur dioxide, gas	A
Sodium chloride solutions	A	Sulfur trioxide	A
Sodium dichromate, 20%	A	Sulfuric acid, up to 5%	A
Sodium hydroxide, 20%	A	Sulfuric acid, 5-10%	A
Sodium hydroxide, 46%	A	Sulfuric acid, 10-50%	A
Sodium hydroxide, 46%	C (100°F)	Sulfuric acid, 50-80%	A
Sodium hydroxide, 50%	C	Sulfuric acid, 60%	A (250°F)
Sodium hydroxide, 73%	C	Sulfuric acid, 90%	A (158°F)
Sodium hypochlorite, 5%	A	Sulfuric acid, 95%	A
Sodium hypochlorite, 20%	B (158°F)	Sulfuric acid, 95%	A (158°F)
Sodium peroxide solutions	A	Sulfuric acid, fuming 20% oleum	A
Soybean oil	A (250°F)	Sonoco XS-820 (EP lube)	A (300°F)

Chemical	Rating	Chemical	Rating
Tannic acid, 10%	A	Trichlorethylene	B (158°F)
Tartaric acid	A	Tricresyl phosphate	A (300°F)
Tetrahydrofuran	C	Triethanolamine	C
Toluene	B (100°F)	Trisodium phosphate solutions	A
Tributyl phosphate	C (212°F)	Tung Oil	A
Trichlorethylene	A	Turpentine	A (158°F)

Chemical	Rating	Chemical	Rating
Xylene	A	Zinc chloride solutions	A
Xylene	A (212°F)		

Aromatic Chemical Resistance-

VersaFlex INCORPORATED

R=Recommended
C=Recommended Conditionally (washdown within 1 hour of spillage)
N=Not Recommended
1=Suitable for immersion and/or splash and spillage conditions
2=Suitable for occasional or intermittent contact for up to 72 hours

Test Procedure: **ASTM D3912** 25°C Exceeds 1 Year

Test Media	
Acetic Acid 10%	C
Ammonium Hydroxide 10%/20	R
Diesel Fuel	R
Gasoline	R
Hydraulic Fluid	R
Hydrochloric Acid 5%/10%	R
Methanol	R
Motor Oil	R
MTBE	R
MTBE/Gasoline 5%	R
NaCl/Water 10%	R
Phosphoric Acid 10%	R
Potassium Hydroxide 10%/20%	R
Sodium Hydroxide 10%/20%/50%	R
Sugar/Water 10%	R
Sulfuric Acid 5%/10%	R
Skydrol	2
Toluene	C
Water	R
2-Methylbutane	R

Test Procedure: **ASTM B117**, after 1000 hours

Test	Result
Blistering, Bare Steel	None
Corrosion from Scribe,mm	4.0
Adhesion, psi, Elcometer	>2000

Note: Applied at 2-mil blast profile, KTA-Tator panels. No primer.

Test Procedure: **ASTM D1308** 25°C Exceeds 1 Year

Test Media	
Acetone	C
Antifreeze	R
Benzene	R
Benzoic Acid	R
Butyl Alcohol	R
Butyl Cellosolve	R
Carbon Dioxide	R
Calcium Hypochlorite	N
Chlorine (5000 ppm in water)	2
Citric Acid	R
Cylloexanol	R
Dichloroacetic Acid	C
Dimethyl Formamide	N
Ethanol	2
Ethylene Glycol	1
Gasoline	R
Hexane	R
Hydraulic Oil	R
Lactic Acid 10%	1
Methylene Chloride	C
Methyl Ethyl Ketone	C
Methanol	R
Mineral Spirits	R
Monobutyl Ether	R
Nitric Acid 20%	C
Phenol	2
Skydrol	2
Sodium Bicarbonate	R
Sodium Chloride	R
Sodium Hydroxide 50%	R
Sodium Hypochlorite 10%	2
Stearic Acid	R
Sulfuric Acid 70%	N
Trichloroethylene	C
Trisodium Phosphate	R
Toluene	C
Vinegar	R
Xylene	C

Test Procedure: **ASTM D 5322**

Jet Fuel A	R

Aromatic Chemical Resistance-

VersaFlex INCORPORATED

R=Recommended

C=Recommended Conditionally (washdown within 1 hour of spillage)
N=Not Recommended
1=Suitable for immersion and/or splash and spillage conditions
2=Suitable for occasional or intermittent contact for up to 72 hours

Test Procedure: **ASTM D3912** 25°C Exceeds 1 Year

Test Media	
Acetic Acid 10%	C
Ammonium Hydroxide 10%/20	R
Diesel Fuel	R
Gasoline	R
Hydraulic Fluid	R
Hydrochloric Acid 5%/10%	R
Methanol	R
Motor Oil	R
MTBE	R
MTBE/Gasoline 5%	R
NaCl/Water 10%	R
Phosphoric Acid 10%	R
Potassium Hydroxide 10%/20%	R
Sodium Hydroxide 10%/20%/50%	R
Sugar/Water 10%	R
Sulfuric Acid 5%/10%	R
Skydrol	2
Toluene	C
Water	R
2-Methylbutane	R

Test Procedure: **ASTM B117**, after 1000 hours

Test	Result
Blistering, Bare Steel	None
Corrosion from Scribe,mm	4.0
Adhesion, psi, Elcometer	>2000

Note: Applied at 2-mil blast profile, KTA-Tator panels. No primer.

Test Procedure: **ASTM D1308** 25°C Exceeds 1 Year

Test Media	
Acetone	C
Antifreeze	R
Benzene	R
Benzoic Acid	R
Butyl Alcohol	R
Butyl Cellosolve	R
Carbon Dioxide	R
Calcium Hypochlorite	N
Chlorine (5000 ppm in water)	2
Citric Acid	R
Cylloexanol	R
Dichloroacetic Acid	C
Dimethyl Formamide	N
Ethanol	2
Ethylene Glycol	1
Gasoline	R
Hexane	R
Hydraulic Oil	R
Lactic Acid 10%	1
Methylene Chloride	C
Methyl Ethyl Ketone	C
Methanol	R
Mineral Spirits	R
Monobutyl Ether	R
Nitric Acid 20%	C
Phenol	2
Skydrol	2
Sodium Bicarbonate	R
Sodium Chloride	R
Sodium Hydroxide 50%	R
Sodium Hypochlorite 10%	2
Stearic Acid	R
Sulfuric Acid 70%	N
Trichloroethylene	C
Trisodium Phosphate	R
Toluene	C
Vinegar	R
Xylene	C

Test Procedure: **ASTM D 5322**
Jet Fuel A — R

tobey wade
STRUCTURAL ENGINEERS

August 7, 2013
Project No. R405-13-13

Ms. Tracy Buono
Facility/Operations Manager
PSC FERNLEY FACILITY
2095 Newlands Drive East
Fernley, NV 89408

RE: TANK T-7 CERTIFICATION

Dear Ms. Buono:

In accordance with the Fernley Facility Amended Tank Replacement Plan dated December 17, 2012, and Appendix D-6 of the pending July 2012 RECRA Permit, each new tank is required to be certified by Independent Registered Professional Engineers (IRPE's) prior to being placed into service. This letter has been prepared to document the evaluation of Tank T-7 as performed by Tobey-Wade Consulting.

Background

Tank T-7 is a pre-existing rectangular flat-bottom welded carbon steel tank as fabricated by Paramount Fabricators. Tank T-7 has a working capacity of 7,580 gallons with a corresponding 7 inch freeboard.

Findings

Based on our evaluation, the following systems are hereby certified as being in compliance with the Amended Tank Replacement plan:

- Tank T-7 has sufficient strength to contain the proposed waste materials without rupturing.
- Tank T-7 is situated on a reinforced concrete foundation system which is capable of adequately supporting the tank and its contents under static and dynamic conditions.
- Tank T-7 is located in an area with sufficient secondary containment as required by 40 CFR Ch. I, 264.193.

- Tank T-7 is stabile against overturning when subjected to loads based on 2006 International Building Code level seismic events.

- Tank T-7 is anchored to prevent sliding when subjected to site-specific 2006 International Building Code level seismic events.

- The exterior of Tank T-7's shell wall has been inspected and found to be in good condition with only a few minor scratches. The Tank Shell Inspection results are included in the Tank Inspection Form, copy attached.

- Tank T-7 has been subjected to a 24-hour leak test and found to be watertight. The Tank Leakage Test results are included in the Tank Inspection Form, copy attached.

- Special Inspection of the anchor plate welding and epoxy anchor bolt installation was performed as required by the International Building Code. A copy of the Special Inspection report is attached.

- The process piping discharge connections have been inspected and found to be undamaged and with no evidence of leakage. The piping connections are adequately attached to the tank to prevent displacement during an earthquake. The associated Process Piping inspection form is attached.

Tobey-Wade Consulting designed the anchorage system, witnessed the tank leakage test and conducted the tank shell inspection, under my direct supervision. Special Inspections were performed by inspectors from Nortech Consultants.

Certification Statement

I certify under penalty of law that this report and all attachments were prepared under my direction and supervision in accordance with a system developed to assure that qualified personnel properly gather and evaluate the information submitted. Based on my inquiry of the person or persons who manage the system or those persons directly responsible for gathering the information, the information, submitted is, to the best of my knowledge and belief, true, accurate, and complete. I am aware that there are significant penalties for submitting false information, including the possibility of fines and imprisonment for knowing violations.

This report has been prepared in accordance with accepted engineering practices and is subject to the assumptions and limitations stated in the report. Also note that this certification covers the aforementioned aspects of Tank T-7 only.

Please feel free to contact me at your convenience should you have any questions relating to our findings.

Sincerely,
TOBEY-WADE CONSULTING

Terrence R. Tobey

TERRENCE R. TOBEY, P.E., S.E.
Principal Structural Engineer

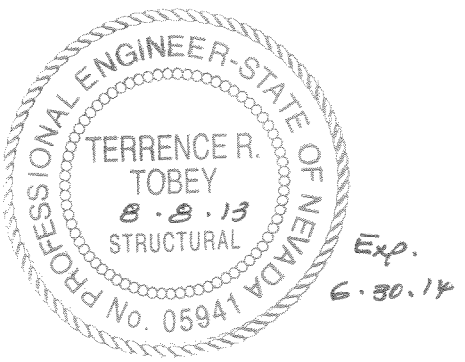

TANK INSPECTION FORM

OWNER: Philip Services Corporation / 21 EMI
PSC Fernley Facility
2095 Newlands Drive East
Fernley, NV 89408
(775)575-2760

TANK NO.: T-7

TANK SHELL INSPECTION

Date Inspected: July 8, 2013

Findings: Tank Shell in good Condition

TANK ANCHORAGE STRUCTURAL OBSERVATION

Type of Anchorage System: Per Sheet TA1.0 Job #: R405-09-13 by Tobey Wade Consulting

Date Inspected: July 8, 2013

# of Anchor Plates/Tie-downs: 16 Plates / 0 Tie Downs

AB Type, Diameter, Spacing and Number/plate: } Anchorage Per Sheet TA1.0 Job #: R405-09-13 by Tobey Wade Consulting (Dated May 2, 2013)

Size of Anchor Plate & Contact with Tank: }

Edge Distances: 24" min

Special Inspection Completed? Yes

TANK LEAKAGE TEST

Date Filled: July 8, 2013 — Water Level below Inspection Hatch: 6" (Top of Tank)

Date of Re-inspection: July 9, 2013 — Water Level below Inspection Hatch: 6"

Shell Leakage? No / No

Leakage on Floor/Drain Pan at Manifold? No / No

INSPECTOR: Brian [signature] **DATE:** July 8, 2013

INSPECTOR: Brian [signature] **DATE:** July 9, 2013

T-7
Special
Inspection

NORTECH Geotechnical/Civil Consultants, Ltd.

FIELD CONSTRUCTION INSPECTION REPORT

PROJECT PSC Environmental JOB NO. 14441-28C

LOCATION 2095 Newlands Drive, Fernley, Nevada REPORT NO. 16A

CONTRACTOR L & H Concrete WEEK ENDING 06-29-13

Work Description

June 27 - Inspected placement of 36 half inch epoxy set all-thread anchor bolts at cat-walk base plate to slab connections at tanks 4 & 5 and placement of 32 half inch epoxy set all-thread anchor bolts at base plate to slab connections at tank 7. Contractor has drilled holes to proper embed depths and has thoroughly cleaned holes with air compressor and wire brush. Project was completed in accordance with details from sheets S/TA1.0 + 6/S1.0 on approved plans. I also inspected welding of base plate/continuity plate to tank 7 and drainage flange plate to tank 7, (17 connections). All welding has been completed in accordance with detail 5/TA1.0 on approved plans and AWS specifications. I also inspected the existing welds of the crystalizer tank referred to in Note 1, detail 4/G52.0 of Engineers letter dated 6/26/12. The existing welds are in good condition and have no visible discontinuities and are in accordance with AWS specifications. (MEV)

PROCESS PIPING INSPECTION FORM

Philip Services Corporation / 21 EMI
PSC Fernley Facility
2095 Newlands Drive East
Fernley, NV 89408
(775)575-2760

Tank Number: T-7

Date Inspected: July 8, 2013

Fill Line Assembly:

Number of Fill Line Assemblies: 0 Fill Line Assemblies

Description:

Discharge Line Assembly:

Number of Discharge Line Assemblies: 1 Discharge Line Assembly

Description: A bulkhead fitting at the bottom of the tank is the only permanent piping in the discharge line assembly. There was no damage to the process piping connection or to the tank shell. No evidence of leaking found. The permanent piping is secured and stable.

INSPECTOR: Brian Gr **DATE:** July 8, 2013

POST-TREATMENT TANKS

tobey wade
STRUCTURAL ENGINEERS

RECEIVED
SEP 24 2013
ENVIRONMENTAL PROTECTION

September 20, 2013
Project No. R405-13-13

Ms. Tracy Buono
Facility/Operations Manager
PSC FERNLEY FACILITY
2095 Newlands Drive East
Fernley, NV 89408

RE: TANK 301 CERTIFICATION

Dear Ms. Buono:

In accordance with the Fernley Facility Amended Tank Replacement Plan dated December 17, 2012, and Appendix D-6 of the pending July 2012 RECRA Permit, each new tank is required to be certified by Independent Registered Professional Engineers (IRPE's) prior to being placed into service. This letter has been prepared to document the evaluation of Tank 301 as performed by Tobey-Wade Consulting.

Background

Tank 301 is a virgin linear polyethylene cone-bottom tank as manufactured by Snyder Industries, Inc. and it has a 7,400 gallon capacity. Snyder Industries has provided data relative to the tank's strength.

Jaik Choi Associates has conducted a structural evaluation of the tank to determine the foundation requirements under static and dynamic (seismic) loads. Jaik Choi Associates also conducted a stability analysis and designed anchorage for the tank.

Certification of the tank shell's compatibility with the proposed waste stream has been provided by others.

Findings

Based on our evaluation, the following systems are hereby certified as being in compliance with the Amended Tank Replacement plan:

- Tank 301 has sufficient strength to contain the proposed waste materials without rupturing based on wall thickness information provided by Snyder Industries.

NEVADA OFFICE
648 LANDER STREET ■ RENO, NEVADA 89509 ■ TEL: (775) 324.7757 ■ FAX: (775) 324.7797

- Tank 301 is situated on a reinforced concrete foundation system which is capable of adequately supporting the tank and its contents under static and dynamic conditions based on the analysis performed by Jaik Choi Associates.

- Tank 301 is located in an area with sufficient secondary containment as required by 40 CFR Ch. I, 264.193.

- Tank 301 is anchored to resist overturning when subjected to site-specific 2006 International Building Code level seismic events based on the analysis performed by Jaik Choi Associates.

- Tank 301 is anchored to prevent sliding when subjected to site-specific 2006 International Building Code level seismic events based on the analysis performed by Jaik Choi Associates.

- The process piping fill and discharge connections have been inspected and found to be undamaged and with no evidence of leakage. The piping connections are adequately attached to the tank to prevent displacement during an earthquake. The associated Process Piping inspection form is attached.

- Special Inspection of the epoxy anchor bolt installation was performed as required by the International Building Code. A copy of the Special Inspection report is attached.

- Tank 301 has been subjected to a 24-hour leak test and found to be watertight. The Tank Leakage Test results are included in the Tank Inspection Form, copy attached.

- The exterior of Tank 301's shell wall has been inspected and found to be undamaged. The Tank Shell Inspection results are included in the Tank Inspection Form, copy attached.

Tobey-Wade Consulting witnessed the tank leakage test and conducted the tank shell inspection, under my direct supervision. Special Inspections were performed by inspectors from Nortech Consultants based on anchorage requirements provided by Jaik Choi Associates.

Certification Statement

I certify under penalty of law that this report and all attachments were prepared under my direction and supervision in accordance with a system developed to assure that qualified personnel properly gather and evaluate the information submitted. Based on my inquiry of the person or persons who manage the system or those persons directly responsible for gathering the information, the information, submitted is, to the best of my knowledge and belief, true, accurate, and complete. I am aware that there are significant penalties for submitting false information, including the possibility of fines and imprisonment for knowing violations.

This report has been prepared in accordance with accepted engineering practices and is subject to the assumptions and limitations stated in the report. Also note that this certification covers the aforementioned aspects of Tank 301 only.

Please feel free to contact me at your convenience should you have any questions relating to our findings.

Sincerely,
TOBEY-WADE CONSULTING

Terrence R. Tobey

TERRENCE R. TOBEY, P.E., S.E.
Principal Structural Engineer

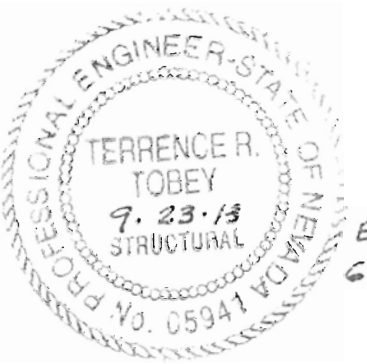

Exp.
6.30.14

Tank Data Sheet

RCRA Regulated? YES

Tank Location: Dewatering Area

Tank Name: Post-Treatment Tank

Tank Numbers: #301, 302

Process Description: Storage/Settling of Post-Treatment Effluent

Vessel Fluid: Neutralized/Treated Liquids w/Treatment Chemical Residuals

Specific Gravity: <1.50

Freeboard At Working Vol ($FT.^3$): 52.6

Normal Operating Pressure: ATMOSPHERIC

Temperature (F°) AMBIENT

	Material	Thickness	Type
Bottom	Virgin linear polyethylene	0.61" AVG	cone
Shell	Virgin linear polyethylene	0.5 " AVG	CYLINDRICAL-VERTICAL
Roof	Virgin linear polyethylene	0.4" avg.	dome

Working Volume (USG):	7,400 gallons	Insulation:	NONE
Nominal Volume (USG):	7,794 gallons	Method of Construction:	rotational molding process
Tank O.D. (ft):	11' 10"	Tank Height or Length (ft):	14' 11"
Design Code Used:	IBC 2006 AISC 13th Edition	Date In Service:	PLANNED TANKS

Anchorage: seismic restraints bolted to concrete. Anchorage designs per 2006 IBC.

Connections:

Item No:	Size (In.)	Gasket	Description
A.	24"		PE Threaded-vented manway w/22" access
B.	3"		flanged drain
C.	3"		flanged drain

Interior Coating: high density linear polyethylene resin as manufactured by ExxonMobil Chemical

Exterior Coating: high density linear polyethylene resin as manufactured by ExxonMobil Chemical

Tank Mfger: Snyder Industries Inc

Tank Sketch:

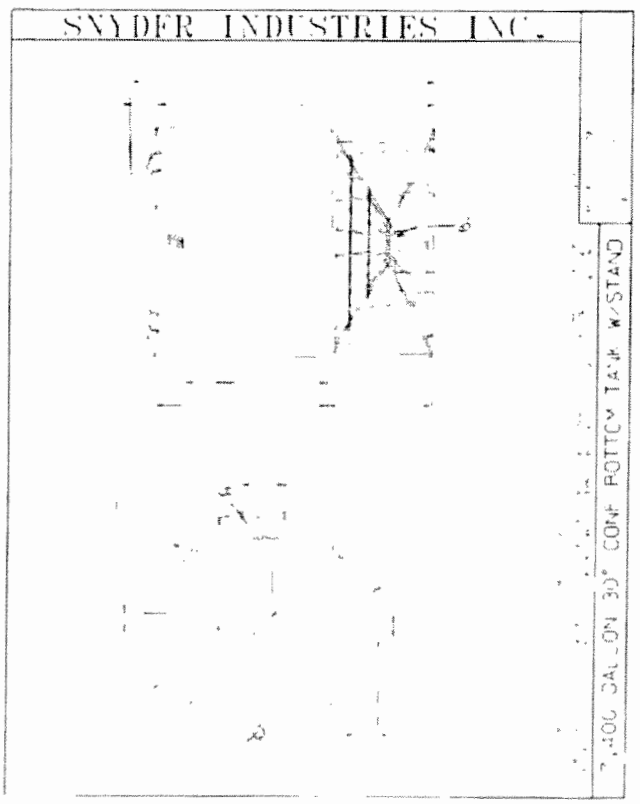

tobey wade
STRUCTURAL ENGINEERS

April 4, 2013
Project No. R405-06-13

Ms. Tracy Buono
Facility/Operations Manager
PSC FERNLEY FACILITY
2095 Newlands Drive East
Fernley, NV 89408

RE: TANK 301 INTERIM CERTIFICATION

Dear Ms. Buono:

In accordance with the Fernley Facility Amended Tank Replacement Plan dated December 17, 2012, and Appendix D-6 of the pending July 2012 RECRA Permit, each new tank is required to be certified by Independent Registered Professional Engineers (IRPE's) prior to being placed into service. This letter has been prepared to document the evaluation of Tank 301 as performed by Tobey-Wade Consulting.

It should be noted that Tank 301 currently has permanent bulkhead fittings with valves for connection of temporary discharge lines. A temporary fill line is attached to a permanent bulkhead fitting. The permanent process piping servicing Tank 301 will be installed in Phase 3 as outlined in the above-referenced documents. Accordingly, this certification is being provided as an interim certification. Final certification of Tank 301 will be provided after the permanent piping and all other associated permanent systems have been installed and inspected.

Background

Tank 301 is a virgin linear polyethylene cone-bottom tank as manufactured by Snyder Industries, Inc. and it has a 7,400 gallon capacity. Snyder Industries has provided data relative to the tank's strength.

Jaik Choi Associates has conducted a structural evaluation of the tank to determine the foundation requirements under static and dynamic (seismic) loads. Jaik Choi Associates also conducted a stability analysis and designed anchorage for the tank.

Certification of the tank shell's compatibility with the proposed waste stream has been provided by others.

Findings

Based on our evaluation, the following systems are hereby certified as being in compliance with the Amended Tank Replacement plan:

- Tank 301 has sufficient strength to contain the proposed waste materials without rupturing based on wall thickness information provided by Snyder Industries.
- Tank 301 will be situated on a reinforced concrete foundation system which is capable of adequately supporting the tank and its contents under static and dynamic conditions based on the analysis performed by Jaik Choi Associates.
- Tank 301 will be located in an area with sufficient secondary containment as required by 40 CFR Ch. I, 264.193.
- Tank 301 is anchored to resist overturning when subjected to site-specific 2006 International Building Code level seismic events based on the analysis performed by Jaik Choi Associates.
- Tank 301 is anchored to prevent sliding when subjected to site-specific 2006 International Building Code level seismic events based on the analysis performed by Jaik Choi Associates.
- The process piping fill and discharge connections have been inspected and found to be undamaged and with no evidence of leakage. The piping connections are adequately attached to the tank to prevent displacement during an earthquake. The associated Process Piping inspection form is attached.
- Special Inspection of the epoxy anchor bolt installation was performed as required by the International Building Code. A copy of the Special Inspection report is attached.
- Tank 301 has been subjected to a 24-hour leak test and found to be watertight. The Tank Leakage Test results are included in the Tank Inspection Form, copy attached.
- The exterior of Tank 301's shell wall has been inspected and found to be undamaged. The Tank Shell Inspection results are included in the Tank Inspection Form, copy attached.

Tobey-Wade Consulting witnessed the tank leakage test and conducted the tank shell inspection, under my direct supervision. Special Inspections were performed by inspectors from Nortech Consultants based on anchorage requirements provided by Jaik Choi Associates.

Certification Statement

I certify under penalty of law that this report and all attachments were prepared under my direction and supervision in accordance with a system developed to assure that qualified personnel properly gather and evaluate the information submitted. Based on my inquiry of the person or persons who manage the system or those persons directly responsible for gathering the information, the information, submitted is, to the best of my knowledge and belief, true, accurate, and complete. I am aware that there are significant penalties for submitting false information, including the possibility of fines and imprisonment for knowing violations.

This report has been prepared in accordance with acceptable engineering practices and is subject to the assumptions and limitations stated in the report. Also note that this certification covers the aforementioned aspects of Tank 301 only.

Please feel free to contact me at your convenience should you have any questions relating to our findings.

Sincerely,
TOBEY-WADE CONSULTING

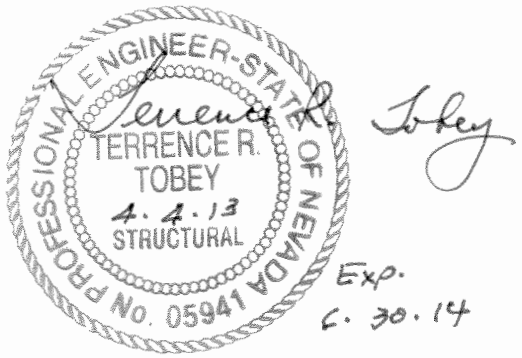

TERRENCE R. TOBEY, P.E., S.E.
Principal Structural Engineer

NORTECH Geotechnical/Civil Consultants, Ltd.

FIELD CONSTRUCTION INSPECTION REPORT

PROJECT PSC Environmental JOB NO. 14441-28C

LOCATION 2095 Newlands Drive, Fernley, Nevada REPORT NO. 6

CONTRACTOR L & H Concrete WEEK ENDING 03-02-13

Work Description

Tank 306 →

February 25 - I inspected steel reinforcement in tank slab 306 Rebar was placed in accordance with structural details on approved plans. I was on site for concrete pour on tank slab. I cast one set of concrete cylinders and performed one slump test. (MSV)

" →

February 26 - Transported previously cast cylinders to the laboratory for proper curing and testing. (MSV)

Tank 301 ABs →

February 27 - On site to inspect placement of twenty four 3/4" x 6-3/4" embed all thread anchor bolts at tank support to slab connections for tank 301. Contractor drilled holes to proper embed depths and has cleaned holes thoroughly with a wire brush and air compressor. I observed placement of bolts and Hilti Epoxy. Project was completed in accordance with detail 7/TS1.4 on approved plans. (MEV)

Tank 301 ABs →

February 28 - Inspected placement of four 3/4" x 6-3/4" epoxy set all thread anchor bolts for cable support to tank frame for tank 301. Contractor drilled holes to proper embed depths and has cleaned holes thoroughly. I observed placement of Hilti Epoxy and bolts. Project was completed in accordance with detail from approved plans. (MEV)

TANK INSPECTION FORM

OWNER: Philip Services Corporation / 21 EMI
PSC Fernley Facility
2095 Newlands Drive East
Fernley, NV 89408
(775)575-2760

TANK NO.: 301 Cone-bottom

TANK SHELL INSPECTION

Date Inspected: March 4, 2013

Findings: No Scratches or Major Dents Noticed.

TANK ANCHORAGE STRUCTURAL OBSERVATION

Type of Anchorage System: Jaik Choi Calcs/Snyder Industries Drawings

Date Inspected: March 4, 2013

# of Anchor Plates/Tie-downs: 12 Plates / 4 Tie-Downs (3/4"ø Tie-Dow

AB Type, Diameter, Spacing and Number/plate: 3/4"ø Anchors, Epoxied, As shown in DWG

Size of Anchor Plate & Contact with Tank: 4" x 3" x 1/4" plate, Legs welded

Edge Distances: 10"± from ℄ of Bolt to Edge of Concrete

Special Inspection Completed? Yes

TANK LEAKAGE TEST

Date Filled: March 3 & 4, 2013, 3:30 pm

Water Level below Inspection Hatch: 24 5/8" Botto of Lip

Date of Re-inspection: March 5, 2013

Water Level below Inspection Hatch: 24 5/8"

Shell Leakage? No

Leakage on Floor/Drain Pan at Manifold? No Leakage on Floor

INSPECTOR: [signature] **DATE:** 3/4/2013

INSPECTOR: [signature] **DATE:** 3/5/2013

PROCESS PIPING INSPECTION FORM

Philip Services Corporation / 21 EMI
PSC Fernley Facility
2095 Newlands Drive East
Fernley, NV 89408
(775)575-2760

Tank Number: 301

Date Inspected: April 3, 2013

Fill Line Assembly:

Number of Fill Line Assemblies: 1 Fill Line Assembly

Description: A bulkhead fitting at the top of the tank is the only permanent piping in the fill line assembly. A temporary fill line is attached to the bulkhead fitting. There was no damage to the process pipe connection or to the tank shell. No evidence of leaking found. The permanent piping is secured and stable.

Discharge Line Assembly:

Number of Discharge Line Assemblies: 1 Discharge Line Assembly

Description: The bulkhead fitting below the tank to the threaded valve connection is the only permanent piping in the discharge line assembly. A temporary discharge line is attached to the valve connection. There was no damage to the process piping connection or to the tank shell. No evidence of leaking found. The permanent piping is secured and stable.

INSPECTOR: Brian Ulm **DATE:** April 3, 2013

tobey wade
STRUCTURAL ENGINEERS

August 7, 2013
Project No. R405-13-13

Ms. Tracy Buono
Facility/Operations Manager
PSC FERNLEY FACILITY
2095 Newlands Drive East
Fernley, NV 89408

RE: TANK 301 CERTIFICATION

Dear Ms. Buono:

In accordance with the Fernley Facility Amended Tank Replacement Plan dated December 17, 2012, and Appendix D-6 of the pending July 2012 RECRA Permit, each new tank is required to be certified by Independent Registered Professional Engineers (IRPE's) prior to being placed into service. This letter has been prepared to document the evaluation of Tank 301 as performed by Tobey-Wade Consulting.

Background

Tank 301 is a virgin linear polyethylene cone-bottom tank as manufactured by Snyder Industries, Inc. and it has a 7,400 gallon capacity Snyder Industries has provided data relative to the tank's strength.

Jaik Choi Associates has conducted a structural evaluation of the tank to determine the foundation requirements under static and dynamic (seismic) loads. Jaik Choi Associates also conducted a stability analysis and designed anchorage for the tank.

Certification of the tank shell's compatibility with the proposed waste stream has been provided by others.

Findings

Based on our evaluation, the following systems are hereby certified as being in compliance with the Amended Tank Replacement plan:

- Tank 301 has sufficient strength to contain the proposed waste materials without rupturing based on wall thickness information provided by Snyder Industries.

- Tank 301 will be situated on a reinforced concrete foundation system which is capable of adequately supporting the tank and its contents under static and dynamic conditions based on the analysis performed by Jaik Choi Associates.

- Tank 301 will be located in an area with sufficient secondary containment as required by 40 CFR Ch. I. 264.193.

- Tank 301 is anchored to resist overturning when subjected to site-specific 2006 International Building Code level seismic events based on the analysis performed by Jaik Choi Associates.

- Tank 301 is anchored to prevent sliding when subjected to site-specific 2006 International Building Code level seismic events based on the analysis performed by Jaik Choi Associates.

- The process piping fill and discharge connections have been inspected and found to be undamaged and with no evidence of leakage. The piping connections are adequately attached to the tank to prevent displacement during an earthquake. The associated Process Piping inspection form is attached.

- Special Inspection of the epoxy anchor bolt installation was performed as required by the International Building Code. A copy of the Special Inspection report is attached.

- Tank 301 has been subjected to a 24-hour leak test and found to be watertight. The Tank Leakage Test results are included in the Tank Inspection Form, copy attached.

- The exterior of Tank 301's shell wall has been inspected and found to be undamaged. The Tank Shell Inspection results are included in the Tank Inspection Form, copy attached.

Tobey-Wade Consulting witnessed the tank leakage test and conducted the tank shell inspection, under my direct supervision. Special Inspections were performed by inspectors from Nortech Consultants based on anchorage requirements provided by Jaik Choi Associates.

Certification Statement

I certify under penalty of law that this report and all attachments were prepared under my direction and supervision in accordance with a system developed to assure that qualified personnel properly gather and evaluate the information submitted. Based on my inquiry of the person or persons who manage the system or those persons directly responsible for gathering the information, the information, submitted is, to the best of my knowledge and belief, true, accurate, and complete. I am aware that there are significant penalties for submitting false information, including the possibility of fines and imprisonment for knowing violations.

This report has been prepared in accordance with accepted engineering practices and is subject to the assumptions and limitations stated in the report. Also note that this certification covers the aforementioned aspects of Tank 301 only

Please feel free to contact me at your convenience should you have any questions relating to our findings.

Sincerely,
TOBEY-WADE CONSULTING

Terrence R. Tobey

TERRENCE R. TOBEY, P.E., S.E.
Principal Structural Engineer

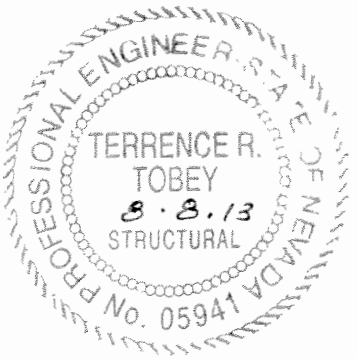

Exp.
6·30·14

NORTECH Geotechnical/Civil Consultants, Ltd.

FIELD CONSTRUCTION INSPECTION REPORT

PROJECT PSC Environmental JOB NO. 14441-28C

LOCATION 2095 Newlands Drive, Fernley, Nevada REPORT NO. 6

CONTRACTOR L & H Concrete WEEK ENDING 03-02-13

Work Description

February 25 - I inspected steel reinforcement in tank slab 306 Rebar was placed in accordance with structural details on approved plans. I was on site for concrete pour on tank slab. I cast one set of concrete cylinders and performed one slump test. (MSV)

February 26 - Transported previously cast cylinders to the laboratory for proper curing and testing. (MSV)

February 27 - On site to inspect placement of twenty four 3/4" x 6-3/4" embed all thread anchor bolts at tank support to slab connections for tank 301. Contractor drilled holes to proper embed depths and has cleaned holes thoroughly with a wire brush and air compressor. I observed placement of bolts and Hilti Epoxy. Project was completed in accordance with detail 7/TS1.4 on approved plans. (MEV)

February 28 - Inspected placement of four 3/4" x 6-3/4" epoxy set all thread anchor bolts for cable support to tank frame for tank 301. Contractor drilled holes to proper embed depths and has cleaned holes thoroughly. I observed placement of Hilti Epoxy and bolts. Project was completed in accordance with detail from approved plans. (MEV)

TANK INSPECTION FORM

OWNER: Philip Services Corporation / 21 EMI
PSC Fernley Facility
2095 Newlands Drive East
Fernley, NV 89408
(775)575-2760

TANK NO.: 301 Cone-bottom

TANK SHELL INSPECTION

Date Inspected: March 4, 2013

Findings: No Scratches or Major Dents Noticed.

TANK ANCHORAGE STRUCTURAL OBSERVATION

Type of Anchorage System: Jaik Choi Calcs/Snyder Industries Drawings

Date Inspected: March 4, 2013

# of Anchor Plates/Tie-downs: 12 Plates / 4 Tie-Downs (3/4"ø Tie-Downs

AB Type, Diameter, Spacing and Number/plate: 3/4"ø Anchors, Epoxied, As shown in DWG

Size of Anchor Plate & Contact with Tank: 4" x 3" x 1/4" plate, Legs welded

Edge Distances: 10 1/2" from ℄ of Bolt to Edge of Concrete

Special Inspection Completed? Yes

TANK LEAKAGE TEST

Date Filled: March 3 & 4, 2013, 3:30 pm

Water Level below Inspection Hatch: 24 5/8" Bottom of Lip

Date of Re-inspection: March 5, 2013

Water Level below Inspection Hatch: 24 5/8"

Shell Leakage? No

Leakage on Floor/Drain Pan at Manifold? No Leakage on Floor

INSPECTOR: Brian Hall DATE: 3/4/2013

INSPECTOR: Brian Hall DATE: 3/5/2013

PROCESS PIPING INSPECTION FORM

Philip Services Corporation / 21 EMI
PSC Fernley Facility
2095 Newlands Drive East
Fernley, NV 89408
(775)575-2760

Tank Number: 301

Date Inspected: April 3, 2013

Fill Line Assembly:

Number of Fill Line Assemblies: 1 Fill Line Assembly

Description: A bulkhead fitting at the top of the tank is the only permanent piping in the fill line assembly. A temporary fill line is attached to the bulkhead fitting. There was no damage to the process pipe connection or to the tank shell. No evidence of leaking found. The permanent piping is secured and stable.

Discharge Line Assembly:

Number of Discharge Line Assemblies: 1 Discharge Line Assembly

Description: The bulkhead fitting below the tank to the threaded valve connection is the only permanent piping in the discharge line assembly. A temporary discharge line is attached to the valve connection. There was no damage to the process piping connection or to the tank shell. No evidence of leaking found. The permanent piping is secured and stable.

INSPECTOR: Brian Ellis DATE: April 3, 2013

Providing Tomorrow's Solutions Today.

March 21, 2013

Nevada Division of Environmental Protection
901 S. Stewart Street, Suite 4001
Carson City, NV 89701

Attn: Mr. Mike Leigh

RE: Self Disclosure, Non-Compliance to Appendix D-6 of the pending July 2012 RECRA Permit

Dear Mr. Leigh:

The purpose of this letter is to self-disclose the non-compliance to Appendix D-6 of the pending July 2012 RECRA Permit as it relates to Phase II specific tank manufacturers and design specifications.

Prior to initiation of the Phase II Tank Replacement project, it was determined that alternate tank manufacturers (Snyder Industries for Linear Polyethylene and Equipment Pro, Inc. for Carbon Steel tanks) were identified for the project. As was completed by the previous manufacturer, the tanks were designed and certified for their intended use.

For clarity of the supplied documentation related to the polyethylene tanks, I've cross referenced below the part number to the specific unit.

7140 is a 6500 gallon tank (307)
5350 is 1250 gallon tank (303 through 306)
5320 is 7400 gallon tank (301 and 302)

If you have any questions or need additional clarification, please do not hesitate to contact me at 775-722-0554 or you may contact me at tracy.buono@pscnow.com.

Sincerely,

Tracy Buono
Facility Manager
21st Environmental Management of Nevada, LLC

030913

AlltanksCom LLC
PO 680474 - Houston, Texas 77268
281.825.4000 – 281.825.4099
gene@alltanks.com

Terrence Tobey,

648 Lander Street Reno,

Nv 89509

Based on the following information, I certify that the tank design and tanks made of virgin linear polyethylene as manufactured by Snyder Industries are suitable for the storage of chemistry as indicated below, in the waste processing stream of the PSC Facility in Fernley NV.

My research indicates that relative to the structural suitability and chemical compatibility of the 100% linear polyethylene tanks, Tank No# 301-307, as fabricated by Snyder, these tanks are approved for long time storage of the below solutions at temperatures up to 150°F.

Alkaline – pH 8-14:

Acids typically less than 20% - pH – 0-6:

Neutral solutions - pH 4-10:

Bleach solutions - pH 11-12:

I have reviewed Snyder Company's product information provided on tank design and compatibility with the information submitted by PSC.

Thanks

Gene Vincent, President

AlltanksCom LLC

JAIK CHOI & ASSOCIATES
Structural Engineering
1215 PORTSIDE WAY
CCORONA DEL MAR, CA 92625
(949) 706-7789 Fax (424) 239-2666
email:jcse@msn.com

Structural Calculations for

Seismic Restraint System for
Ground Supported Storage Tanks (6500 gal Flat, 12500 gal Flat & 7400 gal Cone w/ S.G.=1.4)
Located at PSC Fernley, 2095 Newlands Drive, E, Fernley, NV 89408

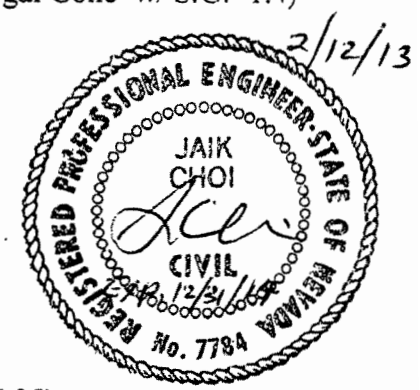

2/12/13

Prepared for

AlltanksCom LLC
Equipment Pro Inc.

Design Criterion

1. Codes ; International Building Code 2006 Edition.
; California Building Code 2007 Edition. (ASCE 7.05)
; AISC 13th Edition.
2. Steel : ASTM A-36 for angles & plates.
3. Cable ; 7x19 Galv. Steel or Type 304 or 316 S.S.
4. Bolts ; Hilti HAS-E Rod Standard or equal
5. Epoxy Adhesive ; Hilti HIT-RE500SD
6. Concrete ; f'c = 4,000 psi @ 28 days for footings.
7. Reinforcing ; ASTM A615-60
8. Soil ; Assumed minimum allowable bearing value = 1,500 psf @ 12" depth

Index

	Page
1. 6500 gal. and 12500 gal. Flat Bottom Tanks	4-10
2. 7400 gal. Cone Bottom Tank	11-16

Appendix

1. Tank Data and Calculations for Anchorage types
2. Calculations for Capacity of Connectors
3. Anchor Bolts ICBO Report (ESR-2322)

SHT. # 3
J.N. 12-932 A
DATE 12/20/12
BY J.C.

Period (sec)	Minimum Sa (g)	
0.2	0.947	(SMs, Fa = 1.179)
1.0	0.538	(SM1, Fv = 1.803)

Conterminous 48 States
2003 NEHRP Seismic Design Provisions
Zip Code = 89408
Spectral Response Accelerations SDs and SD1
SDs = 2/3 x SMs and SD1 = 2/3 x SM1
Site Class D

Period (sec)	Centroid Sa (g)	
0.2	0.890	(SDs)
1.0	0.531	(SD1)

Period (sec)	Maximum Sa (g)	
0.2	1.006	(SDs)
1.0	0.615	(SD1)

Period (sec)	Minimum Sa (g)	
0.2	0.631	(SDs)

1.0 0.922 (SM1, Fv = 1.500)

Jaik Choi Associates
Structural Engineering
(949)706-7789, Fax;(424)239-2666
email;jcse@msn.com

Snyder Industries

Lincoln, NE

Job No. 12-932A
Date; 12/20/12
By; J. Choi

1) BASE ANCHORAGE

INPUT PARAMETERS — **ANCHORAGE CONN.**

PART NUMBER	TANK SIZE (GAL.)	TANK DIA. (FT.)	Hc (FT.)	Hr (FT.)	Ht (FT.)	We (LBS.)	Wc (LBS.)	Wind Pw (LBS.)	Wind CONN. TYPE	SEIS. (SG=1.4) (LBS.)	SEIS. CONN. TYPE
7140--	6500	10.00	11.59	11.85	12.64	1450	54171	5249		77289	4-6D4
5350--	12500	11.83	15.12	15.45	16.45	3100	104175	8081		148945	8-4D4

2) CABLE ANCHORAGE

Safety Factor (S.F.) = 2 / R.F./ A.F. = 2.0

R.F. = 0.75 (Reduction factor due to possible elastic stretch)
A.F = 1.33 (Adjust factor due to duration of loads)

CABLE SIZE	BREAK STRENGTH	LOOP STRENGTH W/S.F.= 2.0
0.25	6400	6400
0.375	12000	12000
0.5	21600	21600
0.625	33600	33600
0.75	48000	48000

CABLE IS 7 X 19 304 SERIES SS

Mot = Vseis.*Cg
Up or Down Ld./conn. = Mot/Ds
Uplift/conn.= Up Ld.- .5*Wef
Wef = 50% of Wt effect. for holdown

INPUT PARAMETERS — **CABLE CONN.**

PART NUMBER	TANK SIZE (GAL.)	TANK DIA. (FT.)	Hr (FT.)	Wt (LBS.)	No. of Anchor WIND	SG1.5	Sg1.9	WIND UPLIFT (LBS.)	CABLE SIZE	SEIS. (SG=1.4) (LBS.)	SEIS. CONN. TYPE
7140--	6500	10.00	11.85	55621	4	4	4	2592	1/4"	-20858	none
5350--	12500	11.83	15.45	107275	4	4	4	4068	1/4"	-40228	none

Jaik Choi Associates
Structural Engineering
(949)706-7789, Fax:(424)239-2666
email; jcse@msn.com

Snyder Industries

Lincoln, NE

For Part #7140, use 14'-0" dia. x 6" thick house-keeping conc. (4,000) pad on top of existing 6" slab Reinf. w/ #4 @ 12" each way at center-Use Sikadur32 bonding agent between existing and new

For Part #5350, use 17'-4" dia. x 12" thick house-keeping conc. (4,000) pad on top of existing 6" slab Reinf. w/ #4 @ 12" ea. way at 3" from the top-Use Sikadur32 bond'g agent between existing and new

Jaik Choi Associates
Structural Engineering
(949)706-7789, Fax;(424)239-2666
email; jcse@msn.com

Snyder Industries

Lincoln, NE

Allowable shearing stress = Fv = 0.4 * Fy = 0.4*36*1.33 = 19.15 ksi
Edge distance of bolt= 1.75 inches Effect. For shear = 1.75"-1.25"/2 = 1.125 inches

1/4" Plate thick.		
Cable Size	Allow.shear	Allow. Brg.
0.25	10.77	5.79
0.375	10.77	8.68
0.5	10.77	11.57
0.625	10.77	14.46

3/8" Plate thick.		
Cable Size	Allow.shear	Allow. Brg.
0.25	16.16	8.68
0.375	16.16	13.02
0.5	16.16	17.36
0.625	16.16	21.70

5) Maximum plate thickness based on allow. conc. bearing stresses

f'c= 2,000 4,000 psi
Allowable concrete bearing stress = .6*fc'*1.33 = Fc= 1600 3200 psi

Conn. Type	2 bolts	4 bolts	6 bolts	Fc (psi)
Max. pl. thk.	0.667	0.514	0.408	for 1600
Max. pl. thk.	0.943	0.727	0.578	for 3200

Base plate length to calculate plate thickness (Pl. thk.)

Conn. Type	2 bolts	4 bolts	6 bolts	
Angle length ("L")	8	10	16	inches
Min. edge dist.	6	8	8	inches

6) Allowable total tank weight (Wt) =Max. Vs/ **0.434**

For f'c = 2,000 psi Concrete

Conn. Type	# of Anchors	Sa	Hp	Tension (lbs)	Shear (lbs)	Max. Vs (kips)	Tank Wt. (kips)	Pl. thk. (inch)
4-2A	(4) 2- 1/2" dia.	3	3.5	3755	1935	3.96	9.11	0.267
4-2B	(4) 2- 5/8" dia.	3	3.5	5490	3025	6.09	14.02	0.331
4-2C	(4) 2- 3/4" dia.	3	3.5	6695	4355	8.40	19.34	0.389
4-2D	(4) 2- 1" dia.	3	3.5	9922	7745	14.16	32.59	0.505
4-4A	(4) 4- 1/2" dia.	8	4	3755	1935	8.19	18.85	0.106
4-4B	(4) 4- 5/8" dia.	8	4	5158	3025	12.44	28.65	0.131
4-4C	(4) 4- 3/4" dia.	8	6	6586	4355	15.49	35.66	0.179
4-4D	(4) 4- 1" dia.	8	6	8669	7745	24.67	56.80	0.226
4-6A	(4) 6- 1/2" dia.	8	4	3473	1935	12.08	27.81	0.165
4-6B	(4) 6- 5/8" dia.	8	4	4178	3025	17.72	40.81	0.199
4-6C	(4) 6- 3/4" dia.	8	6	5525	4355	21.84	50.29	0.271
4-6D	(4) 6- 1" dia.	8	6	6646	7745	32.98	75.93	0.333
8-4A	(8) 4- 1/2" dia.	8	4	3755	1935	19.76	45.49	0.106
8-4B	(8) 4- 5/8" dia.	8	4	5158	3025	30.04	69.17	0.131
8-4C	(8) 4- 3/4" dia.	8	6	6586	4355	37.39	86.08	0.179
8-4D	(8) 4- 1" dia.	8	6	8669	7745	59.56	137 12	0.226
8-6B	(8) 6- 5/8" dia.	8	4	4178	3025	42.79	98 51	0 199
8-6C	(8) 6- 3/4" dia.	8	6	5525	4355	52.72	121.39	0.271
8-6D	(8) 6- 1" dia.	8	6	6646	7745	79.61	183 30	0.333
8-6E	(8) 6- 1" L.dia.	8	6	6829	7745	80.62	185.62	0 335

For f'c = 4,000 psi Concrete

Conn Type	# of Anchors	Sa	Hp	Tension	Shear	Max Vs	Tank Wt	Pl thk

Jaik Choi Associates
Structural Engineering
(949)706-7789, Fax;(424)239-2666
email; jcse@msn.com

Snyder Industries

Lincoln, NE

8-6C4(SS)	(8) 6- 3/4" dia.	8	6	8170	6385	77.55	179.51	0 329
8-6D4(SS)	(8) 6- 1" dia.	8	6	10872	10126	114 84	265.84	0.400
8-6E4(SS)	(8) 6- 1" L.dia.	8	6	9584	13099	124.61	288.44	0.417

Jaik Choi Associates
Structural Engineering
(949)706-7789, Fax;(424)239-2666
email;jcse@msn.com

Snyder

Lincoln, NE

1) BASE ANCHORAGE

INPUT PARAMETERS | **ANCHORAGE CONN.**

PART NUMBER	TANK SIZE (GAL.)	TANK DIA. (FT.)	Hcb (FT.)	Hct (FT.)	Ht (FT.)	We (LBS.)	Wc (LBS.)	Wind Pw (LBS.)	Wind CONN. TYPE	SEIS. (SG=1.4) (LBS.)	SEIS. CONN. TYPE
5320000N	7400	11.83	2.00	5.25	13.36	1200	86340	4942		38014	8-3/4" dia.

8 -3/4" dia. Hilti HVA good for 8*4,355*1.33 = 46,337 # > 38014 O.K.

2) CABLE ANCHORAGE

Safety Factor (S.F.) = 2 / R.F./ A.F. = 2.0

R.F. = 0.75 (Reduction factor due to possible elastic stretch)
A.F. = 1.33 (Adjust factor due to duration of loads)

CABLE SIZE	BREAK STRENGTH	LOOP STRENGTH W/S.F.= 2.0
0.25	6400	6400
0.375	12000	12000
0.5	21600	21600
0.625	33600	33600
0.75	48000	48000

CABLE IS 7 X 19 304 SERIES SS

Mot = Vseis.*Cg
Up or Down Ld./conn. = Mot/Ds
Uplift/conn.= Up Ld.- .5*Wef
Wef = 50% of Wt effect. for holdown

INPUT PARAMETERS | **CABLE CONN.**

PART NUMBER	TANK SIZE (GAL.)	TANK DIA. (FT.)	Hcg (FT.)	Wt (LBS.)	No. of Anchor WIND	SG1.2	Sg1.4	WIND UPLIFT (LBS.)	WIND CABLE SIZE	SEIS. (SG=1.4) (LBS.)	SEIS. CONN. TYPE
5320000N	7400	11.83	9.06	87540	4	4	4	-600	none	-26045	none

No Uplift

Jaik Choi Associates
Structural Engineering
(949)706-7789, Fax:(424)239-2666
email; jcse@msn.com

Snyder

Lincoln, NE

For Part #5320000N, use 14'-6" dia. x 6" thick house-keeping conc. (4,000) pad on top of existing 6" slab Reinf. w/ #4 @ 12" each way at center-Use Sikadur32 bonding agent between existing and new

Jaik Choi Associates
Structural Engineering
(949)706-7789, Fax;(424)239-2666
email; jcse@msn.com

Snyder

Lincoln, NE

Allowable shearing stress = Fv = 0.4 * Fy = 0.4*36*1 33 = 19.15 ksi

Edge distance of bolt= 1.75 inches Effect. For shear = 1.75"-1.25"/2 = 1.125 inches

HIT-RE 500 Epoxy Adhesive Anchoring System 4.2.7

-RE 500 Allowable and Ultimate Bond/Concrete Capacity for HAS Rods in Normal Weight Concrete[1,2,3,4]

Anchor Diameter in (mm)	Embedment Depth in (mm)	HIT-RE 500 Allowable Bond/Concrete Capacity				HIT-RE 500 Ultimate Bond/Concrete Capacity			
		Tensile		Shear		Tensile		Shear	
		f'_c = 2000 psi (13.8 MPa) lb (kN)	f'_c = 4000 psi (27.6 MPa) lb (kN)	f'_c = 2000 psi (13.8 MPa) lb (kN)	f'_c = 4000 psi (27.6 MPa) lb (kN)	f'_c = 2000 psi (13.8 MPa) lb (kN)	f'_c = 4000 psi (27.6 MPa) lb (kN)	f'_c = 2000 psi (13.8 MPa) lb (kN)	f'_c = 4000 psi (27.6 MPa) lb (kN)
3/8 (9.5)	1-3/4 (44)	645 (2.9)	1095 (4.9)	1510 (6.7)	2135 (9.5)	2580 (11.5)	4370 (19.4)	4530 (20.2)	6405 (28.4)
	3-3/8 (86)	2190 (9.7)	2585 (11.5)	3155 (14.0)	4460 (19.8)	8760 (39.0)	10345 (46.0)	9460 (42.1)	13380 (59.5)
	4-1/2 (114)	2420 (10.8)	2585 (11.5)	4855 (21.6)	6860 (30.5)	9685 (43.1)	10335 (46.0)	14560 (64.8)	20580 (91.5)
1/2 (12.7)	2-1/4 (57)	1130 (5.0)	1965 (8.7)	2510 (11.2)	3550 (15.8)	4530 (20.2)	7860 (35.0)	7525 (33.4)	10640 (47.3)
	4-1/2 (114)	4045 (18.0)	5275 (23.5)	5610 (25.0)	7935 (35.3)	16185 (72.0)	21095 (93.8)	16820 (74.8)	23800 (105.9)
	6 (152)	4775 (21.2)	5380 (23.9)	8635 (38.4)	12210 (54.3)	19095 (84.9)	21520 (95.7)	25900 (115.2)	36620 (162.9)
5/8 (15.9)	2-7/8 (73)	1690 (7.5)	3045 (13.5)	5245 (23.3)	7420 (33.0)	6770 (30.1)	12175 (54.2)	15735 (70.0)	22250 (99.0)
	5-5/8 (143)	6560 (29.2)	7355 (32.7)	8760 (39.0)	12395 (55.1)	26240 (116.7)	29420 (130.9)	26280 (116.9)	37180 (165.4)
	7-1/2 (190)	7320 (32.6)	7515 (33.4)	13615 (60.6)	19080 (84.9)	29290 (130.3)	30060 (133.7)	40840 (180.1)	57240 (254.6)
3/4 (19.1)	3-3/8 (86)	2310 (10.3)	4515 (20.1)	7335 (32.6)	10370 (46.1)	9250 (41.1)	18065 (80.4)	22000 (97.9)	31108 (138.4)
	6-3/4 (172)	8670 (38.6)	10755 (47.8)	12615 (56.1)	17840 (79.4)	34685 (154.3)	43020 (191.4)	37840 (168.3)	53520 (238.1)
	9 (229)	10385 (46.2)	12995 (57.8)	19430 (86.4)	27470 (122.2)	41535 (184.8)	51985 (231.3)	58280 (259.2)	82400 (366.5)
7/8 (22.2)	4 (101)	3005 (13.4)	5665 (25.2)	7795 (34.7)	11020 (49.0)	12030 (53.5)	22670 (100.8)	23375 (104.0)	33050 (147.0)
	7-7/8 (200)	12495 (55.6)	15875 (70.6)	17175 (76.4)	24290 (108.0)	49975 (222.3)	63495 (282.5)	51520 (229.2)	72860 (324.1)
	10-1/2 (267)	14705 (65.4)	16185 (72.0)	26440 (117.6)	37390 (166.3)	58820 (261.7)	64730 (287.9)	79320 (352.8)	112160 (498.9)
1 (25.4)	4-1/2 (114)	3945 (17.5)	8440 (37.5)	10035 (44.6)	14190 (63.1)	15790 (70.2)	33765 (150.2)	30104 (133.9)	42565 (189.4)
	9 (229)	13845 (61.6)	17365 (77.2)	22435 (99.8)	31720 (141.1)	55380 (246.4)	69465 (309.0)	67300 (299.4)	95160 (423.3)
	12 (305)	17935 (79.8)	17935 (79.8)	34535 (153.6)	48830 (217.2)	71740 (319.1)	71740 (319.1)	103600 (460.8)	146480 (651.6)
1-1/4 (31.8)	5-5/8 (143)	5760 (25.6)	12815 (57.0)	14760 (65.7)	20870 (92.8)	23045 (102.5)	51270 (228.1)	44280 (196.9)	62610 (278.5)
	11-1/4 (286)	24610 (109.5)	31620 (140.7)	35050 (155.9)	49570 (220.5)	98430 (437.9)	126480 (562.6)	105140 (467.7)	148710 (661.4)
	15 (381)	34130 (151.8)	35270 (156.9)	53960 (240.0)	76300 (339.4)	136525 (607.3)	141090 (627.6)	161880 (720.1)	228900 (1018.2)

1 Influence factors for spacing and/or edge distance are applied to concrete/bond values above, and then compared to the steel value. The lesser of the values is to be used for the design.

2 Average ultimate concrete shear capacity based on Concrete Capacity Design (CCD) method for standard and deep embedment and based on testing for shallow embedment.

3 All values based on holes drilled with carbide bit and cleaned with brush per manufacturer's instructions. Ultimate tensile concrete/bond loads represent the average values obtained in testing.

4 For underwater applications up to 165 feet/50m depth reduce the tabulated concrete/bond values 30% to account for reduced mechanical properties of saturated concrete

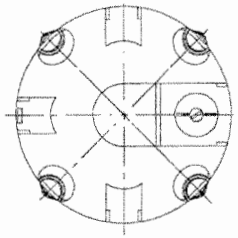

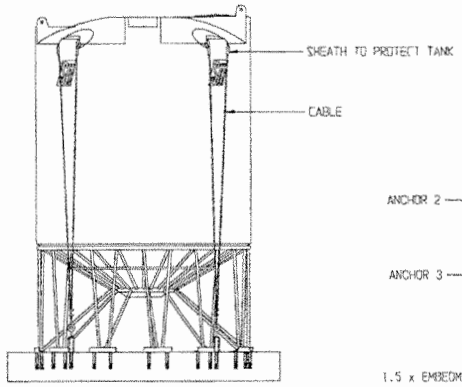

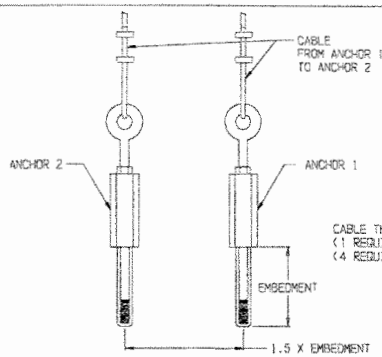

ANCHOR MOUNTING
METHOD "B"
FOR 3/8 CABLE

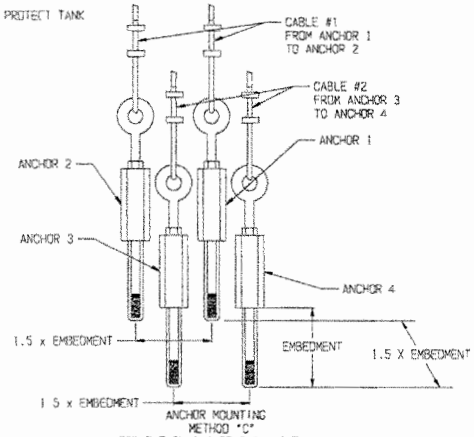

ANCHOR MOUNTING
METHOD "C"
FOR 2 EACH 1/4 OR 3/8 CABLE

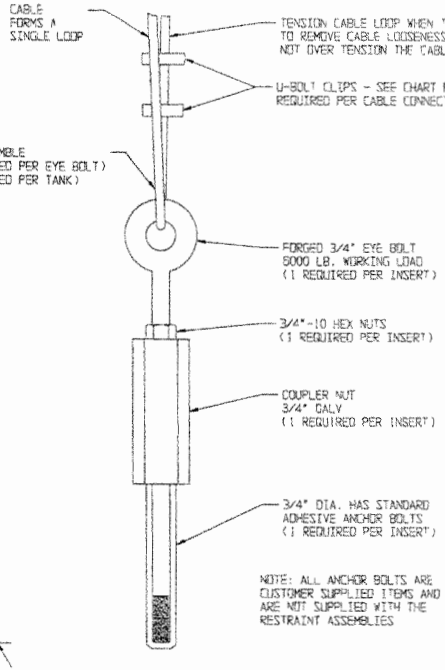

NOTE: ALL ANCHOR BOLTS ARE
CUSTOMER SUPPLIED ITEMS AND
ARE NOT SUPPLIED WITH THE
RESTRAINT ASSEMBLIES

ANCHOR MOUNTING
METHOD "A"
FOR 1/4 CABLE

TABLE 1

CABLE SIZE (INCHES)	THIMBLE SIZE (INCHES)	MINIMUM # CLIPS REQD	AMOUNT OF CABLE TERMINATION (INCHES)	*TORQUE IN FT. LBS.
1/4	1/4	2	4-3/4	15
3/8	3/8	2	6-1/2	45
1/2	1/2	2	11-1/2	65
5/8	5/8	3	12	95
3/4	3/4	4	15	130

* THE TIGHTENING TORQUE VALUES SHOWN ARE BASED UPON THE CHECKER BEING CLEAN, DRY, AND FREE OF CORROSION.

CODES:
CBC 2007 IBC 2006 API 650, ASCE 7-05, AND
AISC 13TH EDITION
SEISMIC DESIGN
Zip Code = 92701, Site class D Fa=1.0, Fv=1.5
Sds = 1.105, Sd1 = 0.567, I = 1.5, R = 3.0
Fp=(.Sds * I * W)/R) = 0.7 * 0.8 * 0.31 W
WIND DESIGN:
IBC/CBC - 150 MPH
Qz = 0.00256KzKztKdV^2I = 58.14 PSF
(Kz = 0.85, Kzt = 1.0, Kd = 0.95, I = 1.25)
GENERAL:
1. ALL CONSTRUCTION MUST MEET LOCAL BUILDING CODE REQUIREMENTS AND BE APPROVED BY THE CONSTRUCTION SITE ENGINEER.
2. THESE GUIDELINES HAVE BEEN PROVIDED TO SPECIFY THE RESTRAINT RECOMMENDATIONS FOR SNYDER INDUSTRY CONE BOTTOM BULK STORAGE TANKS
CONCRETE MATERIAL:
1. CONCRETE SHALL ATTAIN A MINIMUM ULTIMATE 28 DAY COMPRESSIVE STRENGTH OF Fc=3000 PSI
CONCRETE REINFORCEMENT:
1. REINFORCING STEEL SHALL CONFORM TO THE REQUIREMENTS OF ASTM A615 GRADE 40 (Fy 40,000 PSI) AND/OR WELDED WIRE FABRIC PER ASTM A185
2. LAP ALL BARS A MINIMUM OF 40 BAR DIAMETERS LAP WIRE FABRIC 8" MINIMUM
3. MINIMUM COVER FOR REINFORCING BARS SHALL BE AS FOLLOWS
- 3" FOR CONCRETE DEPOSITED DIRECTLY AGAINST EARTH
- 2" FOR CONCRETE DEPOSITED IN FORMS
4. CONCRETE PAD DESIGN SHOULD BE COMPLETED BY THE CONSTRUCTION SITE ENGINEER BASED ON SPECIFIC APPLICATION
STRUCTURAL STEEL:
1. ALL STRUCTURAL STEEL COMPONENTS SHALL BE NEW AND OF BASIC OPEN HEARTH PROCESS STEEL CONFORMING TO ALL APPLICABLE REQUIREMENTS OF ASTM A500, A513, ANSI 1020 AND ANSI 1026 (DEPENDS ON STRUCTURAL SHAPE)
2. ALL ART WELDING ELECTRODES SHALL CONFORM TO ASTM A233 FOR STEEL ART WELDING ELECTRODES ELECTRODES SHALL BE AS RECOMMENDED BY THE MANUFACTURES FOR THE POSITIONS AND OTHER CONDITIONS OF ACTUAL USE WELDING SHALL CONFORM TO REQUIREMENTS OF AMERICAN WELDING SOCIETY AWS D1.2
3. ALL SHARP EDGES AND CORNERS SHALL BE REMOVED ON ALL STRUCTURAL STEEL COMPONENTS
4. CABLES TO BE 7X19 STRANDED CORE CONSTRUCTION SIZED PER CHART MATERIAL TO BE SPECIFIED BY CUSTOMER ORDER (MINIMUM BREAKING STRENGTH EQUAL TO OR GREATER THAN 304 SS RATING)
5. ANCHOR BOLTS TO BE HILTI ADHESIVE ANCHORS, MODEL HVA WITH SIZE AND MATERIAL AS SPECIFIED PER SPECIFICATION CHART
ALL 1/2" DIA HVA ANCHORS TO HAVE 4-1/4" EMBEDMENT
ALL 3/4" DIA. HVA ANCHORS TO HAVE 6-5/8" EMBEDMENT
ALL 1" DIA. HVA ANCHORS TO HAVE 8-1/4" EMBEDMENT
EMBEDMENT MUST BE PER MANUFACTURER'S RECOMMENDATION
NO ALLOWANCE HAS BEEN MADE FOR LESS THAN FULL EMBEDMENT.
ALL OTHER FASTENER MATERIALS MUST CORRESPOND TO THE TYPE OF ANCHOR SELECTED

TANK SIZE (GALLONS)	TANK DIAMETER (INCHES)	1.9 SPECIFIC GRAVITY FLUID STAND REQUIRED	STAND ANCHOR BOLTS REQUIRED	CABLE SIZE	CABLE METHOD	TOTAL # TIE DOWN ANCHOR BOLTS	TOTAL # TIE DOWN CABLES
500	64	78800000	8 EA. 1/2" DIA HAS STANDARD	1/4	A	4	4
500	86	79000000	8 EA. 1/2" DIA HAS STANDARD	1/4	A	4	4
1000	64	78800000	8 EA. 1/2" DIA HAS STANDARD	1/4	A	4	4
1000	86	79000000	8 EA. 1/2" DIA HAS STANDARD	1/4	A	4	4
1400	86	78900000	8 EA. 1/2" DIA HAS STANDARD	1/4	A	4	4
1500 1.6 SG	64	78800000	8 EA. 1/2" DIA HAS STANDARD	1/4	A	4	4
1500 1.9 SG	64	78800100	8 EA. 1/2" DIA HAS STANDARD	1/4	A	4	4
1650	86	78900000	8 EA. 1/2" DIA HAS STANDARD	1/4	A	4	4
2000	90	79300000	24 EA. 3/4" DIA HAS STANDARD	1/4	A	4	4
2500	90	79300000	24 EA. 3/4" DIA HAS STANDARD	1/4	A	4	4

TANK SIZE (GALLONS)	TANK DIAMETER (INCHES)	1.9 SPECIFIC GRAVITY FLUID STAND REQUIRED	STAND ANCHOR BOLTS REQUIRED	CABLE SIZE	CABLE METHOD	TOTAL # TIE DOWN ANCHOR BOLTS	TOTAL # TIE DOWN CABLES
2500	90	79400000	24 EA. 3/4" DIA. HAS STANDARD	1/4	A	4	4
3000	90	79300000	24 EA. 3/4" DIA HAS STANDARD	1/4	A	4	4
3900	90	79800000	24 EA. 3/4" DIA HAS STANDARD	1/4	C	16	8
4100	90	79900000	24 EA. 3/4" DIA. HAS STANDARD	3/8	C	16	8
4400	90	79800000	24 EA. 3/4" DIA HAS STANDARD	3/8	C	16	8
6000	142	79500000	24 EA. 3/4" DIA. HAS STANDARD	1/4	A	4	4
7400	142	79500000	24 EA. 3/4" DIA HAS STANDARD	1/4	A	4	4
11500	142	79500100	24 EA. 1" DIA. HAS STANDARD	1/4	A	4	4
13000	142	79500100	24 EA. 1" DIA. HAS STANDARD	3/8	C	16	8

SNYDER INDUSTRIES INC.
LINCOLN, NE 68504

SCALE NONE	APPROVED BY D.A.O	DRAWN BY M Faten
DATE: 12/07/93		REVISED 11/20/08

S.I.I. CONE BOTTOM TANK RESTRAINT RECOMMENDATIONS

DRAWING NO. 8-3182C, PAGE 1 OF 1

2/12/13
REGISTERED PROFESSIONAL ENGINEER-STATE OF NEVADA
JAIK
CHOI
No. 7784
CIVIL

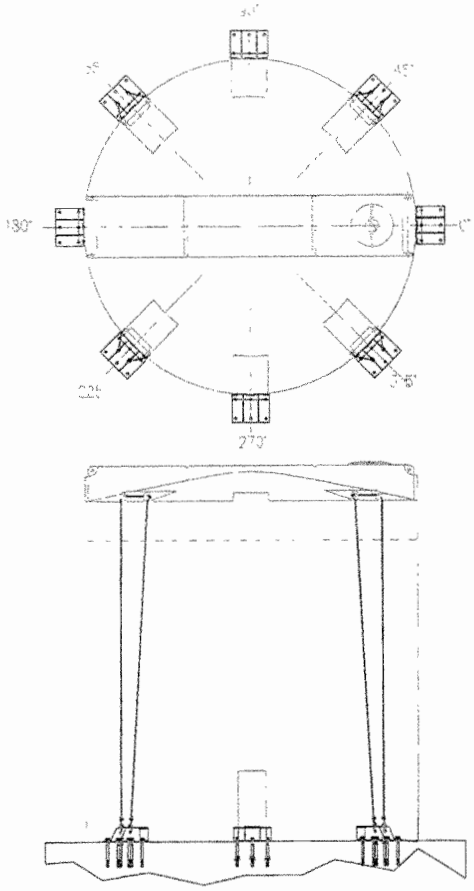

TABLE 1				
CLIP SIZE (INCHES)	ROPE SIZE (INCHES)	MINIMUM # CLIPS REQ.	AMOUNT OF ROPE TURN-BACK (INCHES)	*TORQUE IN FT. LBS
1/4	1/4	2	4-3/4	15
3/8	3/8	2	6-1/2	45
1/2	1/2	3	11-1/2	65
5/8	5/8	3	12	95

* THE TIGHTENING TORQUE VALUES SHOWN ARE BASED UPON THE THREADS BEING CLEAN, DRY, AND FREE OF LUBRICATION.)

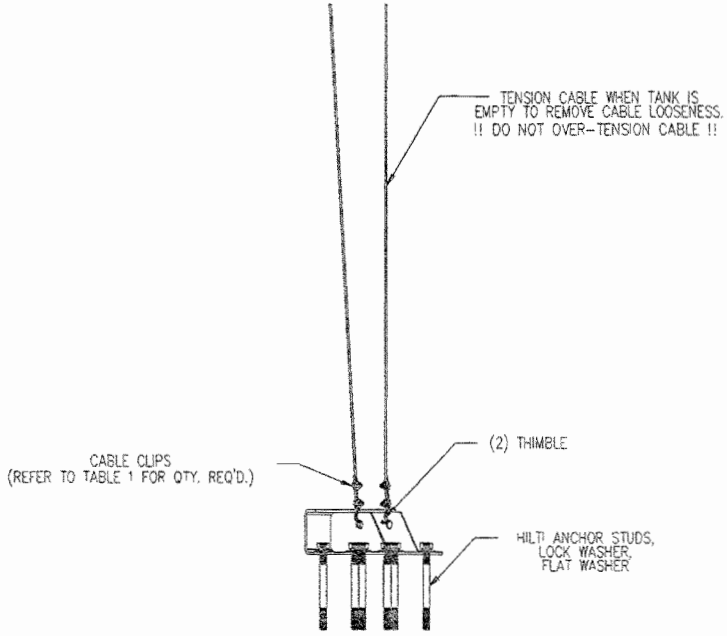

1.4 SPECIFIC GRAVITY								
TANK GAL.	TANK DIA.	ANCHOR	QTY.	ANCHOR BOLT	QTY.	EMBEDMENT	CABLE	FOUNDATION
6500	120"	B-2469	4	1" HILTI HAS STD.	24	9"	1/4"	B-2509
12500	142"	B-2467	8	1" HILTI SUPER HAS (ASTM 193A)	32	9"	1/4"	B-2509

2/12/13

REGISTERED PROFESSIONAL ENGINEER STATE OF NEBRASKA
JAIK CHOI
CIVIL
EXP. 12/31/14

REVISIONS			
#	DESCRIPTION	DATE	BY
A	PICTORIALLY UPDATE ANCHOR	01/07/13	J.D

CODES:

CODES:
IBC2006
CBC2007
ASCE 7.05
AISC 13th EDITION
ACI 318-02
SEISMIC DESIGN:
IBC SEISMIC DESIGN CATAGORY "D" (GOVERNING CODES)
Fp=(Vi Wi+Vc Wc)/(We+Wc*SG)= .434W
(Ss=1.34, S1 =.53. R=3.0, I=1.5)
WIND DESIGN:
IBC - 110 MPH
Qz=.00256KzKztKdV^2*I=31.27PSF
(Kz=.85, Kzt=1.0. Kd=.95,I=1.25)

GENERAL:
1. ALL CONSTRUCTION SHALL MEET LOCAL BUILDING CODE REQUIREMENTS AND BE APPROVED BY THE BUILDING OFFICIAL.
2. THESE GUIDELINES HAVE BEEN PROVIDED TO SPECIFY THE RESTRAINT RECOMMENDATIONS FOR SNYDER INDUSTRY BULK STORAGE TANKS.

CONCRETE:
1. CONCRETE SHALL HAVE A MINIMUM DESIGN AS PER DRAWING REFERENCED IN SPECIFICATION CHART BELOW.
2. CONCRETE PAD DESIGN SHOULD BE REVIEWED AND APPROVED BY THE BUILDING OFFICIAL BASED ON SPECIFIC APPLICATION AS OTHER DESIGN PARAMETERS ARE POSSIBLE DEPENDING UPON SITE CONDITIONS.

STRUCTURAL STEEL.
1 ALL STRUCTURAL STEEL COMPONENTS SHALL BE NEW AND OF BASIC OPEN HEARTH PROCESS STEEL CONFORMING TO ALL APPLICABLE REQUIREMENTS OF ASTM A36 (STRUCTURAL STEEL FOR BRIDGES AND BUILDINGS - Fy = 36,000 PSI.).
2. ALL ARC WELDING ELECTRODES SHALL CONFORM TO ASTM A233 FOR STEEL ARC WELDING ELECTRODES. ELECTRODES SHALL BE AS RECOMENDED BY THE MANUFACTURES FOR THE POSITIONS AND OTHER CONDITIONS OF ACTUAL USE. WELDING SHALL CONFORM TO REQUIREMENTS OF AMERICAN WELDING SOCIETY AWS D121
3. ALL SHARP EDGES AND CORNERS SHALL BE REMOVED ON ALL STRUCTURAL STEEL COMPONENTS
4. CABLES TO BE 7X19 STRANDED CORE CONSTUCTION SIZED PER CHART MATERIAL TO BE SPECIFIED BY CUSTOMER ORDER (MINIMUM BREAKING STRENGTH EQUAL TO OR GREATER THAN 304 SS RATING)
5. ANCHOR BOLTS TO BE HILTI ADHESIVE ANCHORS, MODEL HVA WITH SIZE, MATERIAL, AND EMBEDMENT AS SPECIFIED PER SPECIFICATION CHART BELOW.
ALL OTHER FASTENER MATERIALS MUST CORRESPOND TO THE TYPE OF ANCHOR SELECTED.

SNYDER INDUSTRIES INC.
LINCOLN, NE 68504 PHONE: (402)467-5221 FAX. (402)465-1210

SCALE: NTS	APPROVED BY.	DRAWN BY. J.D
DATE: 01/07/13		REVISION A

S.I.I. TANK SEISMIC RESTRAINT SYSTEM RECOMENDATIONS FOR S.I.I. 6,500 & 12,500 GALLON VERTICAL STORAGE TANKS

TOLERANCES UNLESS SPECIFIED OTHERWISE
ANGULAR: ± 1°
DECIMAL: .XXX = ± 1/32"

DRAWING NUMBER
B-2497

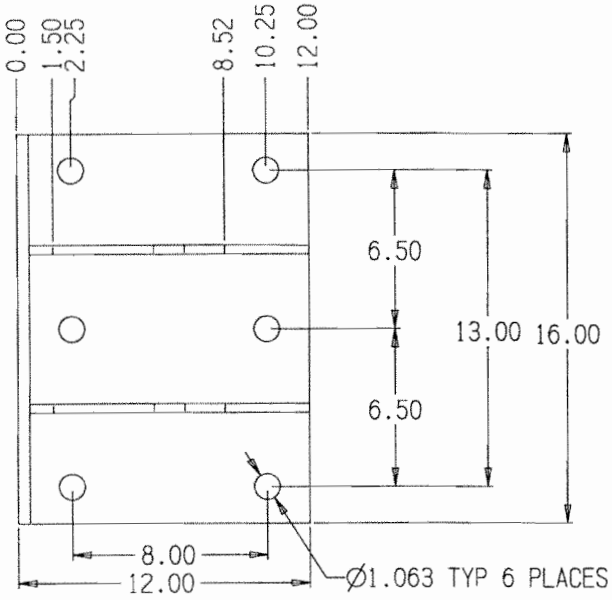

NOTES:
1. MATERIAL ASTM A-36 OR EQUAL. PLATE 3/8 AND 1/2" THICK.
2. HOT DIP GALVANIZE THE PART PER ASTM A-123-89. ALTERNATE FINISH TO BE BLACK ENAMEL PAINT FINISH PER SII PAINTING STANDARDS. DATED 7/13/98. HOT DIP GALVANIZED IS THE PREFERRED FINISH.
3. PART SHOWN IS MADE WITH A BENT PLATE. BEND MUST BE PERPENDICULAR TO THE PLATE GRAIN.
4. WELDED FABRICATION CAN BE SUBSTITUTED FOR THE BEND, BUT WELD MUST BE FULL PENETRATION WELD FROM BOTH SIDES AND GROUND SMOOTH ON THE BOTTOM OF THE PLATE.
5. DEBUR ALL EDGES. HEAVILY DEBUR HOLE ON VERTICAL PLATE (A SMALL RADIUS IS PREFERRED).

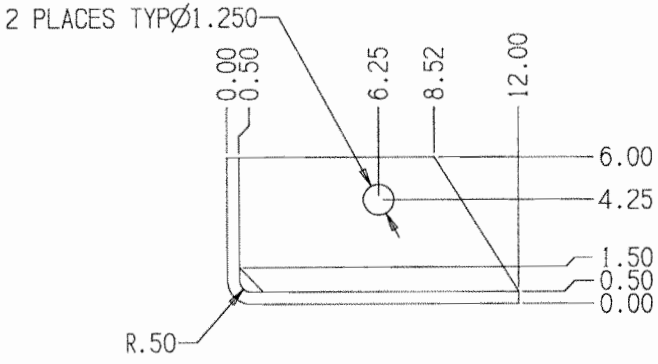

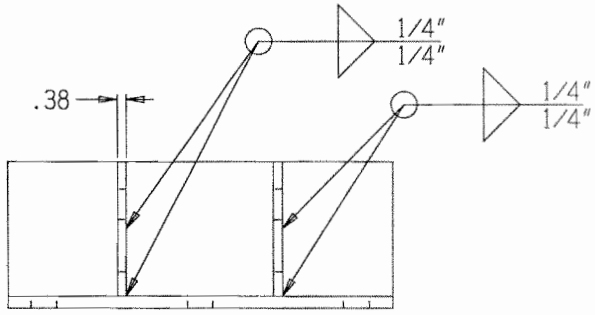

SNYDER INDUSTRIES INC.		
LINCOLN, NE 68504 PHONE:(402) 467-5221 FAX:(402) 467-3247		
SCALE: 1:3	APPROVED BY:	DRAWN BY: D.A.D.
DATE: 5/18/04		REVISED
SEISMIC ANCHOR PLATE - 6 BOLT HEAVY VERSION		
TOLERANCES UNLESS OTHERWISE SPECIFIED: FRACTIONAL: ±1/32"; ANGULAR: ±1° DECIMAL: .X = ±0.100"; .XX = ±0.030"; .XXX = ±0.010"		DRAWING NUMBER B-2469

PSC Environmental Services, LLC
Fernley, Lyon County, Nevada

Structural Calculations
For
Poly Tank Foundations

Design Code: 2009 IBC

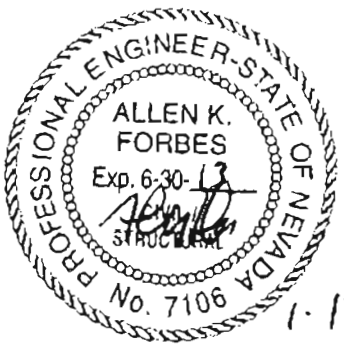

1-17-13

Prepared for:

Mr. Jim Dailey
Equipment Pro Incorporated
721 Parkwood Drive
Ste. Genevieve, MO 63670

January 11, 2013

FEG Project Number: 121039

Title : PSC Fernley, Nevada Job # 121039
Dsgnr: JJS Date: 12:07PM, 11 JAN 13
Description Tank Footing Design

Scope

Rev: 580c02
User: KW-0603475, Ver 5.8.0, 1-Dec-2003
(c)1983-2003 ENERCALC Engineering Software

General Footing Analysis & Design

Description 6,500 Gal Tank

General Information

Code Ref: ACI 318-02, 1997 UBC, 2003 IBC, 2003 NFPA 5000

Allowable Soil Bearing	1,500.0 psf	**Dimensions...**	
Short Term Increase	1.000	Width along X-X Axis	14.000 ft
Seismic Zone	4	Length along Y-Y Axis	14.000 ft
		Footing Thickness	6.00 in
Live & Short Term Combined		Col Dim. Along X-X Axis	84.00 in
f'c	4,000.0 psi	Col Dim. Along Y-Y Axis	84.00 in
Fy	60,000.0 psi	Base Pedestal Height	0.000 in
Concrete Weight	145.00 pcf		
Overburden Weight	0.00 psf	Min Steel %	0.0014
		Rebar Center To Edge Distance	2.00 in

Loads

Applied Vertical Load...			
Dead Load	77.200 k	...ecc along X-X Axis	0.000 in
Live Load	k	..ecc along Y-Y Axis	0.000 in
Short Term Load	k		

	Creates Rotation about Y-Y Axis (pressures @ left & right)	Creates Rotation about X-X Axis (pressures @ top & bot)
Applied Moments...		
Dead Load	k-ft	k-ft
Live Load	k-ft	k-ft
Short Term	228.100 k-ft	228.100 k-ft
Applied Shears...		
Dead Load	k	k
Live Load	k	k
Short Term	k	k

Summary

Caution: X(short)ecc>Widt

14.00ft x 14.00ft Footing, 6.0in Thick, w/ Column Support 84.00 x 84.00in x 0.0in high

	DL+LL	DL+LL+ST
Max Soil Pressure	466.4	966.3 psf
Allowable	1,500.0	1,500.0 psf
"X" Ecc. of Resultant	0.000 in	29.944 in
"Y" Ecc. of Resultant	0.000 in	29.944 in
X-X Min. Stability Ratio	2.805	1.500 :1
Y-Y Min. Stability Ratio	2.805	

	Actual	Allowable
Max Mu	7.019 k-ft per ft	
Required Steel Area		0.423 in2 per ft

Shear Stresses....	Vu	Vn * Phi
1-Way	76.568	107.517 psi
2-Way	54.868	131.953 psi

Footing Design

Shear Forces	ACI C-1	ACI C-2	ACI C-3	Vn * Phi
Two-Way Shear	46.92 psi	54.87 psi	35.27 psi	131.95 psi
One-Way Shears...				
Vu @ Left	33.13 psi	76.57 psi	49.22 psi	107.52 psi
Vu @ Right	33.13 psi	1.05 psi	0.67 psi	107.52 psi
Vu @ Top	33.13 psi	76.57 psi	49.22 psi	107.52 psi
Vu @ Bottom	33.13 psi	1.05 psi	0.67 psi	107.52 psi

Moments	ACI C-1	ACI C-2	ACI C-3	Ru / Phi	As Req'd
Mu @ Left	2.89 k-ft	-0.22 k-ft	-0.14 k-ft	200.5 psi	0.17 in2 per ft
Mu @ Right	2.89 k-ft	7.02 k-ft	4.51 k-ft	487.4 psi	0.42 in2 per ft
Mu @ Top	2.89 k-ft	7.02 k-ft	4.51 k-ft	487.4 psi	0.42 in2 per ft
Mu @ Bottom	2.89 k-ft	-0.22 k-ft	-0.14 k-ft	200.5 psi	0.17 in2 per ft

Title : PSC Fernley, Nevada Job # 121039
Dsgnr: JJS Date: 12:07PM 11 JAN 13
Description : Tank Footing Design

Scope :

General Footing Analysis & Design

Description 6,500 Gal Tank

Soil Pressure Summary

Service Load Soil Pressures	Left	Right	Top	Bottom
DL + LL	466.38	466.38	466.38	466.38 psf
DL + LL + ST	0.00	966.30	966.30	0.00 psf
Factored Load Soil Pressures				
ACI Eq C-1	559.65	559.65	559.65	559.65 psf
ACI Eq C-2	0.00	1,352.82	1,352.82	0.00 psf
ACI Eq C-3	0.00	869.67	869.67	0.00 psf

ACI Factors (per ACI 318-02, applied internally to entered loads)

ACI C-1 & C-2 DL	1.200	ACI C-2 Group Factor	0.750	Add'l "1.4" Factor for Seismic	1.400
ACI C-1 & C-2 LL	1.600	ACI C-3 Dead Load Factor	0.900	Add'l "0.9" Factor for Seismic	0.900
ACI C-1 & C-2 ST	1.000	ACI C-3 Short Term Factor	1.000		
....seismic = ST *	1.100 Used in ACI C-2 & C-3				

3/12

Summary Sketch | Printing |

Print Sketch

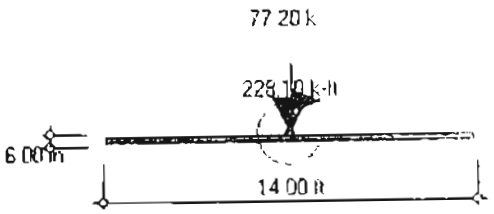

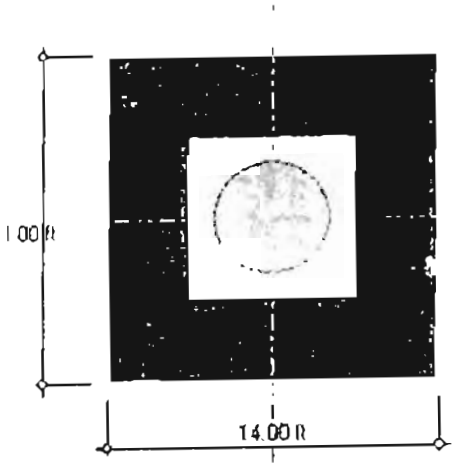

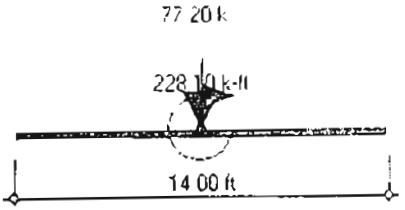

6,500 Gallon Tank

Title PSC Fernley Nevada Job # 121039
Dsgnr: JJS Date: 12:07PM, 11 JAN 13
Description : Tank Footing Design

Scope :

General Footing Analysis & Design

Description 12,500 Gal Tank

General Information

Code Ref. ACI 318-02, 1997 UBC, 2003 IBC, 2003 NFPA 5000

Allowable Soil Bearing	1,500.0 psf	**Dimensions...**	
Short Term Increase	1.000	Width along X-X Axis	17.330 ft
Seismic Zone	4	Length along Y-Y Axis	17.330 ft
		Footing Thickness	6.00 in
Live & Short Term Combined		Col Dim. Along X-X Axis	102.00 in
f'c	4,000.0 psi	Col Dim. Along Y-Y Axis	102.00 in
Fy	60,000.0 psi	Base Pedestal Height	0.000 in
Concrete Weight	145.00 pcf		
Overburden Weight	0.00 psf	Min. Steel %	0.0014
		Rebar Center To Edge Distance	2.00 in

Loads

Applied Vertical Load...

Dead Load	149.000 k	..ecc along X-X Axis	0.000 in
Live Load	k	...ecc along Y-Y Axis	0.000 in
Short Term Load	k		

Applied Moments...	Creates Rotation about Y-Y Axis (pressures @ left & right)	Creates Rotation about X-X Axis (pressures @ top & bot)
Dead Load	k-ft	k-ft
Live Load	k-ft	k-ft
Short Term	586.100 k-ft	586.100 k-ft

Applied Shears...	Creates Rotation about Y-Y Axis (pressures @ left & right)	Creates Rotation about X-X Axis (pressures @ top & bot)
Dead Load	k	k
Live Load	k	k
Short Term	k	k

Summary

Caution: X(short)ecc>Widt

17.33ft x 17.33ft Footing, 6.0in Thick, w/ Column Support 102.00 x 102.00in x 0.0in high

	DL+LL	DL+LL+ST
Max Soil Pressure	568.6	1,255.4 psf
Allowable	1,500.0	1,500.0 psf
"X" Ecc. of Resultant	0.000 in	41.184 in
"Y" Ecc. of Resultant	0.000 in	41.184 in
X-X Min. Stability Ratio	2.525	1.500 .1
Y-Y Min. Stability Ratio	2.525	

	Actual	Allowable
Max Mu	12.608 k-ft per ft	
Required Steel Area		0.826 in2 per ft
Shear Stresses...	Vu	Vn * Phi
1-Way	106.412	107.517 psi
2-Way	78.464	127.804 psi

Footing Design

Shear Forces	ACI C-1	ACI C-2	ACI C-3	Vn * Phi
Two-Way Shear	77.81 psi	78.46 psi	58.85 psi	127.80 psi
One-Way Shears...				
Vu @ Left	51.26 psi	106.41 psi	79.81 psi	107.52 psi
Vu @ Right	51.26 psi	-1.87 psi	-1.40 psi	107.52 psi
Vu @ Top	51.26 psi	106.41 psi	79.81 psi	107.52 psi
Vu @ Bottom	51.26 psi	-1.87 psi	-1.40 psi	107.52 psi

Moments	ACI C-1	ACI C-2	ACI C-3	Ru / Phi	As Req'd
Mu @ Left	5.80 k-ft	-0.56 k-ft	-0.42 k-ft	402.6 psi	0.34 in2 per ft
Mu @ Right	5.80 k-ft	12.61 k-ft	9.46 k-ft	875.5 psi	0.83 in2 per ft
Mu @ Top	5.80 k-ft	12.61 k-ft	9.46 k-ft	875.5 psi	0.83 in2 per ft
Mu @ Bottom	5.80 k-ft	-0.56 k-ft	-0.42 k-ft	402.6 psi	0.34 in2 per ft

Title PSC Fernley Nevada Job # 121039
Dsgnr: JJS Date 12:07PM 11 JAN 13
Description : Tank Footing Design

Scope .

Rev 580002
User KW-0603476, Ver 5.8.0, 1-Dec-2003
(c)1983-2003 ENERCALC Engineering Software

General Footing Analysis & Design

Description 12,500 Gal Tank

Soil Pressure Summary

Service Load Soil Pressures	Left	Right	Top	Bottom
DL + LL	568.62	568.62	568.62	568.62 psf
DL + LL + ST	0.00	1,255 40	1,255.40	0.00 psf
Factored Load Soil Pressures				
ACI Eq C-1	682.35	682.35	682.35	682 35 psf
ACI Eq. C-2	0.00	1,506.48	1,506 48	0 00 psf
ACI Eq C-3	0 00	1,129.86	1,129.86	0 00 psf

ACI Factors (per ACI 318-02, applied internally to entered loads)

ACI C-1 & C-2 DL	1.200	ACI C-2 Group Factor	0.750	Add"l "1 4" Factor for Seismic	1 200
ACI C-1 & C-2 LL	1 600	ACI C-3 Dead Load Factor	0.900	Add"l "0 9" Factor for Seismic	0 900
ACI C-1 & C-2 ST	1 000	ACI C-3 Short Term Factor	1.000		
seismic = ST *	1 100 Used in ACI C-2 & C-3				

Summary Sketch | Printing |

Print Sketch

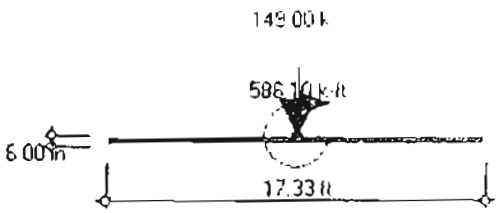

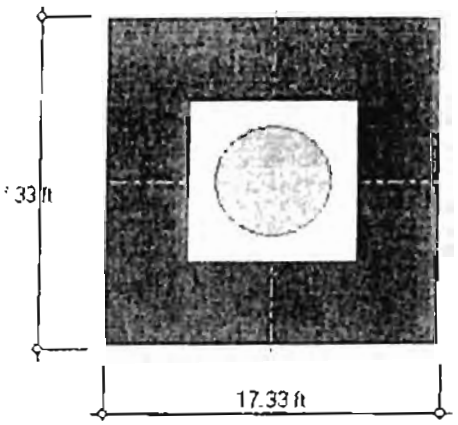

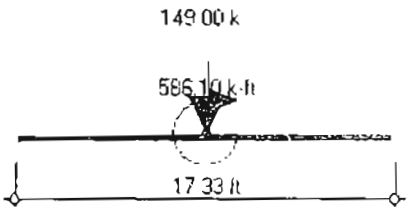

12,500 Gallon Tank

Jaik Choi Associates
Structural Engineering
(949)706-7789, Fax:(424)239-2666
email; jose@msn.com

Snyder Industries

Lincoln, NE

Sheet No
Job No 12-932A
Date 12/20/12
By. J Choi

C) FOUNDATION DESIGN

SII Vertical Ground Supported Tank (flat bottom)

Desgin loads = Vs = 0.434 W

Design Parameter

Allow. Bearing "Fb"=	1500 psf x 1.33 =	1995 psf
Passive Pressure "Pp"=	250 psf x 1.33 =	332.5 psf
Friction Coeff. = u =	0.3	

Hc, Height of tank content
Ht; Height of tank top
We; Empty Weight of tank
Wc; Content Weight in tank
Wt; Total Weight of tank
Wf, Footing Weight
SG; Specific Gravity
Fd; Footing Diameter
Fe; Footing Edge Distance
Ft; Footing Thickness
Mf, Moment in the footing
Mot; Overturning Moment
Mr; Resisting Moment
F S , Factor of Safety for Overturning
SL, Sliding resistance
Fa; Soil bearing value (Direct)
Fb; Soil bearing value (Overturing)
Fs; Soil bearing value (Total)
b; Soil reaction resultant location
Sf; Section Modulus of footing
As; Area of reinforcing steel required

1) Overturning

Mot = Vs*Hc/2
Total Dl.(TD) = W + Wt. Ftg
Mresist (Mr) = TD*.5*Fw
Factor of Safety "F.S."=Mr/Mot = > 1.5

2) Sliding of Foundation

Load = Fp = Vs
Resist = u*Total Dl.+ Passive Pressure
SL > Vs

3) Soil Bearing

Result @ (Mr-Mot)/TD="b"
Fa = (Wt + Wf) / (.785*Fd^2)
Fb = (Wt + Wf)*(.5*Fd-b)/Sf
Fs = (Fa + Fb) psf < 1995 O.K.

SERVICE DEAD LOAD USED IN ENERCALC

Design for Specific gravity (SG) = 1.4

INPUT PARAMETERS **FOUNDATION SIZES**

PART NUMBER	TANK SIZE (GAL.)	TANK DIA. (FT.)	Hc (FT.)	Ht (FT.)	We (LBS.)	Wc (LBS.)	Wt (LBS.)	Fe (FT.)	Fd (FT.)	Ft (FT.)	b (FT.)	Wf (LBS.)
7140--	6500	10.00	11.59	12.64	1450	75839	77289	2.00	14.00	1.00	4.73	23079
5350--	12500	11.83	15.12	16.45	3100	145845	148945	2.75	17.33	1.50	5.76	53046

ULTIMATE SEISMIC OVERTURNING LOAD USED IN ENERCALC

RESULTS **SOIL BEARING & FOOTING REINFORCING**

PART NUMBER	Vs (LBS.)	SL (LBS.) > Vs	Mot (ft-k)	Mr (ft-k)	F.S. > 1.5	Fa psf	Fb psf	Fs psf	Mf ft.-k	As in2	Reinf Size	in o.c
7140--	33569	31155	228.1	703	3.08	652	847	1499	2.84	0.14	# 4 @	17
5350--	64691	64541	586.1	1750	2.99	857	1147	2004	7.12	0.20	# 4 @	12

Title : PSC Fernley Nevada Job # 121039
Dsgnr: JJS Date: 12:34PM 11 JAN 13
Description : Tank Footing Design

Scope :

Rev 580002
User: KW-0603478 Ver 5.8.0 1-Dec-2003
(c)1983-2003 ENERCALC Engineering Software

General Footing Analysis & Design

Description 7.400 Gal Tank on Existing 12" Concrete Pad

General Information

Code Ref: ACI 318-02, 1997 UBC, 2003 IBC, 2003 NFPA 5000

Allowable Soil Bearing	1,500.0 psf	Dimensions.	
Short Term Increase	1.000	Width along X-X Axis	14.500 ft
Seismic Zone	4	Length along Y-Y Axis	14.500 ft
		Footing Thickness	12.00 in
Live & Short Term Combined		Col Dim. Along X-X Axis	102.00 in
f'c	4,000.0 psi	Col Dim. Along Y-Y Axis	102.00 in
Fy	60,000.0 psi	Base Pedestal Height	0.000 in
Concrete Weight	145.00 pcf		
Overburden Weight	0.00 psf	Min Steel %	0.0014
		Rebar Center To Edge Distance	5.00 in

Loads

Applied Vertical Load...			
Dead Load	87.500 k	...ecc along X-X Axis	0.000 in
Live Load	k	...ecc along Y-Y Axis	0.000 in
Short Term Load	k		

Applied Moments...	Creates Rotation about Y-Y Axis (pressures @ left & right)	Creates Rotation about X-X Axis (pressures @ top & bot)
Dead Load	k-ft	k-ft
Live Load	k-ft	k-ft
Short Term	382.400 k-ft	382.400 k-ft

Applied Shears...	Creates Rotation about Y-Y Axis (pressures @ left & right)	Creates Rotation about X-X Axis (pressures @ top & bot)
Dead Load	k	k
Live Load	k	k
Short Term	k	k

Summary

Caution X(short)ecc>Widt

14.50ft x 14.50ft Footing, 12.0in Thick, w/ Column Support 102.00 x 102.00in x 0.0in high

	DL+LL	DL+LL+ST
Max Soil Pressure	561.2	1,353.1 psf
Allowable	1,500.0	1,500.0 psf
"X' Ecc. of Resultant	0.000 in	38.893 in
"Y' Ecc. of Resultant	0.000 in	38.893 in
X-X Min. Stability Ratio	2.237	1.500 :1
Y-Y Min. Stability Ratio	2.237	

	Actual	Allowable
Max Mu	5.998 k-ft per ft	
Required Steel Area		0.259 in2 per ft

Shear Stresses....	Vu	Vn * Phi
1-Way	37.588	107.517 psi
2-Way	21.720	142.041 psi

Footing Design

Shear Forces	ACI C-1	ACI C-2	ACI C-3	Vn * Phi
Two-Way Shear	20.71 psi	21.72 psi	16.29 psi	142.04 psi
One-Way Shears...				
Vu @ Left	14.37 psi	37.59 psi	28.19 psi	107.52 psi
Vu @ Right	14.37 psi	-5.01 psi	-3.75 psi	107.52 psi
Vu @ Top	14.37 psi	37.59 psi	28.19 psi	107.52 psi
Vu @ Bottom	14.37 psi	-5.01 psi	-3.75 psi	107.52 psi

Moments	ACI C-1	ACI C-2	ACI C-3	Ru / Phi	As Req'd
Mu @ Left	2.24 k-ft	-0.78 k-ft	-0.59 k-ft	50.9 psi	0.26 in2 per ft
Mu @ Right	2.24 k-ft	6.00 k-ft	4.50 k-ft	136.0 psi	0.26 in2 per ft
Mu @ Top	2.24 k-ft	6.00 k-ft	4.50 k-ft	136.0 psi	0.26 in2 per ft
Mu @ Bottom	2.24 k-ft	-0.78 k-ft	-0.59 k-ft	50.9 psi	0.26 in2 per ft

Description 7,400 Gal Tank on Existing 12" Concrete Pad

Soil Pressure Summary

Service Load Soil Pressures	Left	Right	Top	Bottom
DL + LL	561.17	561.17	561.17	561.17 psf
DL + LL + ST	0.00	1,353.14	1,353.14	0.00 psf
Factored Load Soil Pressures				
ACI Eq. C-1	673.41	673.41	673.41	673.41 psf
ACI Eq. C-2	0.00	1,623.77	1,623.77	0.00 psf
ACI Eq. C-3	0.00	1,217.82	1,217.82	0.00 psf

ACI Factors (per ACI 318-02, applied internally to entered loads)

ACI C-1 & C-2 DL	1.200	ACI C-2 Group Factor	0.750	Add'l "1.4" Factor for Seismic	1.200
ACI C-1 & C-2 LL	1.600	ACI C-3 Dead Load Factor	0.900	Add'l "0.9" Factor for Seismic	0.900
ACI C-1 & C-2 ST	1.000	ACI C-3 Short Term Factor	1.000		
.seismic = ST *	1.100	Used in ACI C-2 & C-3			

Summary Sketch | Printing |

Print Sketch

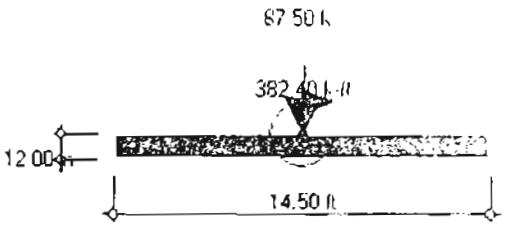

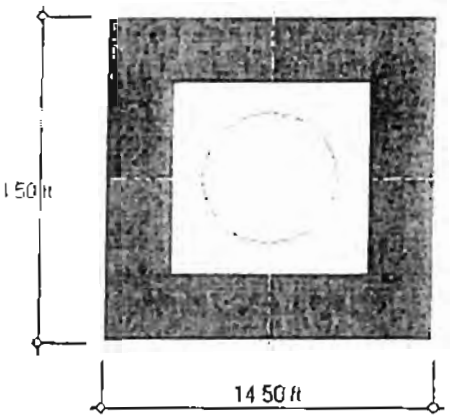

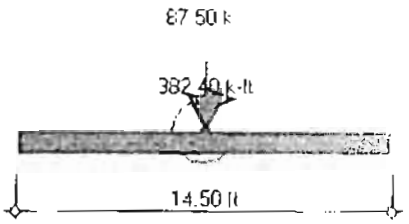

7,400 Gallon Tank

Jaik Choi Associates
Structural Engineering
(949)706-7789, Fax:(424)239-2666
email, jcse@msn.com

Snyder

Lincoln, NE

Sheet No [illegible]
Job No 12-932A
Date 12/20/12
By, J. Choi

Structural Calculations for the footing supporting tank

C) FOUNDATION DESIGN

Vertical Ground Supported Tank (Cone bottom)

Desgin loads = Vs = 0.434 W

Design Parameter

Allow Bearing "Fb"=	1500 psf x 1.33 =	1995 psf
Passive Pressure "Pp"=	250 psf x 1.33 =	332.5 psf
Friction Coeff = u =	0.4	

1) Overturning

Mot = Vs*Hc/2
Total Dl (TD) = W + Wt Ftg
Mresist (Mr) = TD*.5*Fw
Factor of Safety "F.S "=Mr/Mot = > 1.5

2) Sliding of Foundation

Load = Fp = Vs
Resist = u*Total Dl.+ Passive Pressure
SL > Vs

3) Soil Bearing

Result @ (Mr-Mot)/TD="b"
Fa = (Wt + Wf) / (785*Fd^2)
Fb = (Wt + Wf)*(5*Fd-b)/Sf
Fs = (Fa + Fb) psf < 1995 O.K

Hc Height of tank content
Ht Height of tank top
We Empty Weight of tank
Wc, Content Weight in tank
Wt, Total Weight of tank
Wf; Footing Weight
SG, Specific Gravity
Fd, Footing Diameter
Fe, Footing Edge Distance
Ft Footing Thickness
Mf, Moment in the footing
Mot; Overturning Moment
Mr; Resisting Moment
F.S ; Factor of Safety for Overturning
SL, Sliding resistance
Fa, Soil bearing value (Direct)
Fb; Soil bearing value (Overturing)
Fs; Soil bearing value (Total)
b; Soil reaction resultant location
Sf; Section Modulus of footing
As; Area of reinforcing steel required

Design for Specific gravity (SG) = 1.4

Footing width = 14.50 ft
Saddle dist. = 8.30 ft

SERVICE DEAD LOAD USED IN ENERCALC

INPUT PARAMETERS / FOUNDATION SIZES

PART NUMBER	TANK SIZE (GAL)	TANK DIA (FT)	Hcg (FT.)	Ht (FT)	We (LBS)	Wc (LBS.)	Wt (LBS.)	Fe (FT)	Fd (FT)	Ft (FT)	b (FT)	Wf (LBS)
5320000N	7400	11.83	9.06	13.36	1200	86340	87540	1.33	14.49	1.00	3.84	24723

RESULTS / SOIL BEARING & FOOTING REINFORCING

PART NUMBER	Vs (LBS)	SL (LBS.) > Vs	Mot (ft-k)	Mr (ft-k)	F.S > 1.5	Fa psf	Fb psf	Fs psf	Mf ft-k	As in2	Reinf Size	in o.c
5320000N	38014	45987	382.4	813	2.13	681	1280	1962	3.59	0.19	# 4 @	13

ULTIMATE SEISMIC OVERTURNING LOAD USED IN ENERCALC

Frontenac Engineering Group
2725 Sutton Boulevard
Saint Louis, Missouri 63143
314-644-2200 Fax 314-644-0645

JOB [illegible]
SHEET NO 12 OF
CALCULATED BY JJS DATE 7/11/12
CHECKED BY DATE
SCALE

Determine Size & Spacing of Reinforcing

1 6 500 Gallon Tank

$A_{s\,req} = 0.42\ in^2/ft$

Provide No. 6 Bars @ 12" o.c. Each Way

$A_{s\,provided} = 0.44\ in^2/ft$ dlc

2 12,500 Gallon Tank

$A_{s\,req} = 0.83\ in^2/ft$

Provide No. 6 Bars @ 6" o.c.

$A_{s\,provided} = 0.88\ in^2/ft$ dlc

3 7,400 Gal. Tank

Tank Rests on Existing 12' Conc Pad & Requires Only Minimum Reinforcing

Assume Existing Pad Contains Sufficient Reinforcing. dlc

Frontenac Engineering Group
2725 Sutton Boulevard
Saint Louis, Missouri 63143
314-644-2200 Fax 314-644-0645

JOB 121039 PSC NEVADA
SHEET NO. 12A OF 12
CALCULATED BY JJS DATE 1/15/13
CHECKED BY DATE
SCALE

CHECK CONC. SLAB FOR PUNCHING SHEAR

OVERTURNING MOMENT:

$M_{OT} = 382.4$ Kft

DEAD WT OF STRUCTURE.

$W_t = 87.5$ Kips

DISTANCE B/W SUPPORTS

$D = 11'$

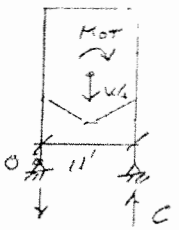

ASSUME COMPRESSION FORCE IS DISTRIBUTED B/W (2) 4'x3½"x¼" ANGLE SUPPORTS.

$\Sigma M_0 = 0$

$M_{OT} + W_t \times D/2 = C \times D$

$1.0(382.4) + 1.2(87.5)(5.5) = C \times 11$

$C = 87.3$ Kips (ULTIMATE DOWNWARD FORCE)

ULTIMATE FORCE PER R

$V_u = \frac{1}{2} C = 43.7$ Kips

$c_1 = 4''$

$c_2 = 3.5''$

$d = 6''$

$c_1 + d = 10''$

$c_2 + d = 9.5''$

$b_o = 2(c_1 + d) + 2(c_2 + d)$

$b_o = 39$ in

$\phi V_c = \phi 4 \lambda \sqrt{f'_c}\, b_o d$

$\phi V_c = 0.75(4)\sqrt{4000}\,(27)(6)$

$\phi V_c = 411.4$ Kips $> V_u = 47.3$ Kips ok (SOME OF THE COMPRESSION FORCE WILL BE DISTRIBUTED TO ADJACENT BARS R's)

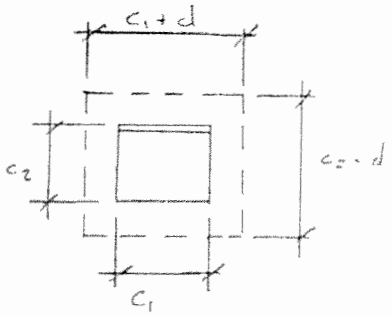

∴ SLAB IS ADEQUATE TO RESIST PUNCHING SHEAR

Pastic Tank Chemical Resistance Chart for Polypropylene, Polyethylene Linear and Crosslink, gasket materials.

This Chemical Resistance Chart is provided as a general guide. Confirm this information with your chemical sales agent, get him to confirm container materials and get your MSDS report.

(No responsibility for performance is accepted, based on these guidelines) Remember chemical compounds have different characteristics as the compound's constituents percentages of concentrations CHANGE, temperature, pressure, particulate content, trace metals; all have an impact on corrosion.

Read The Above, it is very IMPORTANT that you understand these variables as you utilize this chart as a guide...

PE = Polyethylene... PP = Polypropylene... XLPE = Crosslink Polyethylene... A = Excellent... B = Good... C = Not suggested

Chemical resistance information. You can search this page by using your browser's *Find on this page* option.

Chemical Resistance Data

		TANK MATERIALS						FITTING MATERIAL							
		PE		PP		XLPE		PVC	CPVC	EPDM	NEOPRENE	VITON	316 SS	TITANIUM	HASTELLOY C
REAGENT	CONC.	70	140	70	140	70	140								
Acetone		C	C	C	C	C	C	C	C	C	C	C	C	C	C
Acetaldehyde*	100%	B	C	A	B	B	C	C	C	A	C	C	A	A	A
Acetic Acid*	10%	A	A	A	A	A	A	A	A	A	A	B	A	A	A
Acetic Acid*	60%	A	B	A	A	A	A	A	A	A	B	B	A	A	A
Acetic Anhydride		C	C	-	-	C	C	C	C	B	A	C	A	A	A
Air		A	A	A	A	A	A	A	A	A	A	A	A	A	A
Aluminum Chloride	all concentr.	A	A	A	A	A	A	A	A	A	A	A	C	B	A
Aluminum Fluoride	all concentr.	A	A	A	A	A	A	A	A	A	A	A	C	A	B
Aluminum Sulphate	all concentr.	A	A	A	A	A	A	A	A	A	A	A	B	A	B
Alums	all types	A	A	A	A	A	A	A	A	A	A	A	A	-	A
Ammonia	100% dry gas	A	A	A	A	A	A	B	A	A	A	A	A	C	A
Ammonium Carbonate		A	A	A	A	A	A	A	A	A	A		B	A	B
Ammonium Chloride	sat'd	A	A	A	A	A	A	A	A	A	A	A	C	B	A
Ammonium Fluoride	sat'd	A	A	A	A	A	A	A	A	B	A	A	C	A	A
Ammonium Hydroxide	10%	A	A	A	A	A	A	A	A	B	A	B	A	A	B
Ammonium Hydroxide	28%	A	A	A	A	A	A	A	A	A	A	B	A	A	B
Ammonium Nitrate	sat'd.	A	A	A	A	A	A	A	A	A	B	A	A	A	B
Ammonium Persulphate	sat'd.	A	A	A	A	A	A	A	A	A	A	A	B	A	B
Ammonium Sulphate	sat'd.	A	A	A	A	A	A	A	A	A	A	A	B	A	B
Ammonium Metaphoshate	sat'd.	A	A	A	A	A	A	A	A	A	A	A	B	A	B
Ammonium Sulfide	sat'd.	A	A	A	A	A	A	A	A	A	A	A	B	A	B
Amyl Acetate*#	100%	C	C	B	C	C	C	C	C	A	C	C	A	A	A
Amyl Alcohol*#	100%	A	A	A	B	A	A	A	A	A	A	B	A	B	A
Amyl Chloride*#	100%	C	C	C	C	C	C	C	C	C	C	B	A	C	A
Aniline*#	100%	C	C	A	A	A	C	C	C	B	C	C	B	C	B

Aqua Regia+		C	C	C	C	C	C	C	C	C	C	B	C	A	C
Arsenic Acid	all concentr.	A	A	A	A	A	A	A	A	A	A	A	A	B	B
Aromatic Hydrocarbons*#		C	C	-	-	C	C	C	C	C	C	A	C	-	-
Ascorbic Acid	10%	A	A	A	A	A	A	A	A	A	A	A	-	-	-
Barium Carbonate	sat'd.	A	A	A	A	A	A	A	A	A	A	A	B	A	B
Barium Chloride	sat'd.	A	A	A	A	A	A	A	A	A	A	A	A	A	B
Barium Hydroxide		A	A	A	A	A	A	A	A	A	A	A	B	B	A
Barium Sulphate	sat'd.	A	A	A	A	A	A	B	B	A	A	A	B	B	-
Barium Sulphate	sat'd.	A	A	A	A	A	A	A	A	A	A	A	B	A	A
Beer		A	A	A	A	C	C	A	A	A	C	A	A	B	B
Benzene*#		C	C	B	C	C	C	C	C	C	C	A	B	A	B
Benzoic Acid	all concentr.	A	A	A	A	A	A	A	A	C	A	A	B	B	A
Bismuth Carbonate	sat'd.	A	A	A	A	A	A	A	A	A	A	A	A	A	B
Bleachlye	10%	A	A	A	A	A	A	A	A	A	A	A	A	B	B
Borax	sat'd.	A	A	A	A	A	A	A	A	A	A	A	A	B	A
Boric Acid	all concentr.	A	A	A	A	A	A	A	B	A	A	A	A	A	A
Boron Trifluoride		A	A	-	-	A	A	A	A	A	A	A	-	B	-
Brine		A	A	A	A	A	A	A	A	A	A	A	C	A	A
Bromine+	liquid	C	C	C	C	C	C	C	C	C	C	A	C	A	A
Bromine Water #	sat'd.	C	C	C	-	C	C	C	C	C	C	A	C	A	A
Butanediol*	10%	A	A	A	A	A	A	-	-	-	-	-	-	-	-
Butanediol*	60%	A	A	A	A	A	A	-	-	-	-	-	-	-	-
Butanedial*	100%	A	A	A	A	A	A	-	-	-	-	-	-	-	-
Butter*		A	A	A	A	C	C	-	A	A	B	A	A	-	-
n-Butyl Acetate*#	100%	A	C	C	C	A	C	B	C	B	C	B	B	A	A
n-Butyl Alcohol	100%	A	A	A	-	A	A	A	B	B	A	A	A	A	A
Butyric Acid#	conc.	C	C	-	-	-	-	B	B	B	C	B	B	A	A
Calcium Bisulphide		A	A	A	A	A	A	A	A	A	A	A	B	A	-
Calcium Carbonate	sat'd.	A	A	A	A	A	A	A	A	A	A	A	B	B	B
Calcium Chlorate	sat'd.	A	A	A	A	A	A	A	A	A	-	A	-	-	-
Calcium Chloride	sat'd.	A	A	A	A	A	A	A	A	B	A	A	B	A	A
Calcium Hydroxide	conc.	A	A	A	A	A	A	A	A	B	C	A	B	A	B
Calcium Hyphochlorite	bleach sol'n.	A	A	A	B	B	B	B	B	A	C	A	C	-	B
Calcium Nitrate	50%	A	A	A	A	A	A	A	A	A	B	A	A	A	
Calcium Oxide	sat'd.	A	A	-	-	A	A	A	A	A	A	A	A	A	A
Calcium Sulphate		A	A	A	A	A	A	A	A	A	C	-	B	A	A
Camphor Oil*#		C	C	C	C	C	C	-	-	-	-	A	A		
Carbon Dioxide	all concentr.	A	A	A	A	A	A	A	A	A	A	A	A	A	A
Carbon Disulphide		C	C	B	C	C	C	C	C	C	C	A	B	B	B
Carbon Monoxide		A	A	A	A	A	A	A	A	A	A	A	A	A	A
Carbon Tectrachloride#		C	C	C	C	C	C	B	C	C	C	A	B	A	A
Carbonic Acid		A	A	A	A	A	A	A	A	A	A	A	A	B	A
Caster Oil#	conc.	A	A	A	A	A	A	A	A	A	A	A	A	A	A
Chlorine+	100% dry gas	C	C	C	C	B	C	C	C	C	C	A	C	C	B
Chlorineliquid+		C	C	C	C	C	C	A	A	C	C	A	C	A	A
Chlorine Water+	2% sat'd. sol'n.	A	A	A	B	A	A	A	A	C	C	A	C	A	A

Chlorobenzene*#		C	C	C	C	C	C	C	C	C	C	A	A	A	B
Chlorofoam*#		B	C	C	C	C	C	C	C	C	C	A	A	A	A
Chlorosulphonic Acid	100%	C	C	C	C	C	C	C	C	C	C	C	B	C	A
Chrome Alum	sat'd.	A	A	A	A	A	A	A	A	A	A	A	A	A	A
Chromic Acid	80%	-	-	A	-	-	-	C	C	C	C	B	B	C	B
Chromic Acid	50%	A	B	A	A	A	B	B	B	B	C	A	B	C	B
Chromic Acid	10%	A	A	A	A	A	A	A	A	B	C	A	B	C	B
Cider*		A	A	A	A	C	C	-	-	-	A	A	A	A	-
Citric Acid*	sat'd.	A	A	A	A	A	A	-	B	A	A	A	A	A	A
Coconut Oil Alcohols*		A	A	A	A	A	A	A	A	A	A	A	A	A	A
Coffee		A	A	A	A	A	A	A	A	A	A	A	A	A	A
Cola Concentrates*		A	A	A	A	A	A	A	A	A	A	A	A	A	A
Copper Chloride	sat'd.	A	A	A	A	A	A	A	A	A	A	A	C	A	A
Copper Cyanide	sat'd.	A	A	A	A	A	A	A	A	A	A	A	B	B	B
Copper Fluoride	2%	A	A	A	A	A	A	A	A	A	-	A	A	A	A
Copper Nitrate	sat'd.	A	A	A	A	A	A	A	A	-	A	A	B	B	A
Copper Sulphate	sat'd.	A	A	A	A	A	A	A	A	A	A	A	B	A	A
Corn Oil*		A	A	A	A	A	A	A	A	A	A	A	A	A	A
Cottonseed Oil*		A	A	A	A	A	A	A	A	A	A	A	A	A	A
Cuprous Chloride	sat'd.	A	A	A	A	A	A	A	A	A	A	A	C	A	A
Detergents, Synthetic*		A	A	A	A	A	A	A	A	A	A	A	A	A	A
Developers, Photographic		A	A	A	A	A	A	A	A	-	-	-	A	A	A
Dextrin	sat'd.	A	A	A	A	A	A	A	A	A	A	A	A	A	A
Destrose	sat'd.	A	A	A	A	A	A	A	A	A	A	A	A	A	A
Diazo Salts		A	A	A	A	A	A	A	A	-	-	-	-	-	-
Dibutylphthalate*#		B	B	A	B	B	B	C	C	-	-	-	A	-	-
Dichlorobenzene*#		C	C	-	-	C	C	-	-	-	-	-	-	-	-
Diethyl Ketone*#		B	B	-	-	B	C	-	-	-	-	-	-	-	-
Diethylene Glycol*		A	A	A	A	A	A	C	C	A	A	A	A	A	B
Diglycolic Acid*		A	A	-	-	A	A	A	A	A	-	A	A	A	-
Dimethylamine		C	C	-	-	C	C	C	C	C	A	C	A	-	-
Disodium Phosphate		A	A	A	A	A	A	A	A	-	-	A	A	A	-
Emulsions, Photgraphic*		A	A	A	A	A	A	A	A	A	A	A	A	A	A
Ethyl Acetate*#	100%	B	C	B	B	B	C	C	C	B	C	C	A	A	A
Ethyl Alcohol*	100%	A	A	A	A	A	A	A	A	A	A	A	A	A	A
Ethyl Alcohol*	35%	A	A	A	A	A	A	A	A	A	A	A	A	A	A
Ethyl Benzene*#		C	C	C	C	C	C	-	-	-	-	-	A	-	-
Ethyl Chloride#		C	C	C	C	C	C	C	C	A	B	A	A	A	A
Ethyl Ether#		C	C	B	C	C	C	C	C	C	C	C	A	A	B
Ethylene Chloride*#		C	C	C	C	C	C	C	C	A	B	A	A	B	C
Ethylene Glycol*		A	A	A	A	A	A	A	A	A	A	A	A	A	B
Fatty Acids*		A	A	A	A	A	A	B	B	C	B	A	A	B	A
Ferric Chloride	sat'd.	A	A	A	A	A	A	A	A	A	B	A	C	A	B
Ferric Nitrate	sat'd.	A	A	A	A	A	A	A	A	A	A	A	A	A	B
Ferrous Chloride	sat'd.	A	A	A	A	A	A	A	A	A	A	A	C	A	B
Ferrous Sulphate		A	A	A	A	A	A	A	A	A	A	A	A	A	A
Fish Solubles*		A	A	A	A	A	A	A	A	A	A	A	A	A	A
Fluoboric Acid		A	A	A	A	A	A	A	A	A	A	A	C	C	A
Fluosillic Acid	conc.	A	B	A	B	A	A	A	A	A	A	A	B	C	A
Fluosillic Acid	32%	A	A	A	A	A	A	A	A	A	A	A	B	C	A

Formic Acid	all concentr.	A	A	A	A	A	A	A	A	A	A	C	C	C	A
Fructose	sat'd.	A	A	A	A	A	A	A	A	A	A	A	A	A	A
Fruit Pulp*		A	A	A	A	A	A	A	A	A	A	A	A	A	A
Furfural#	100%	B	C	C	C	C	C	C	C	B	C	C	B	B	A
Furfuryl Alcohol*#		B	C	C	C	C	C	-	-	-	-	A	A	-	-
Gallic Acid*	sat'd.	A	B	A	A	A	A	A	B	B	B	A	B	A	B
Gasoline*#		B	C	B	C	A	C	C	C	C	B	A	A	A	A
Glucose		A	A	A	A	A	A	A	A	A	A	A	A	A	A
Glycerine*		A	A	A	A	A	A	A	A	A	A	A	A	A	A
Glycol*		A	A	A	A	A	A	A	A	A	A	A	A	A	A
Glycolic Acid*	30%	A	A	A	A	A	A	A	A	A	A	A	A	A	A
Grape Sugar	sat'd. ag.	A	A	A	A	A	A	A	A	A	A	A	A	A	A
n-Heptane*#		B	B	-	-	A	C	C	A	C	A	A	A	A	A
Hexachlorobenzene		A	-	-	-	A	A	-	-	-	-	-	-	-	-
Hexanol, Tertiary*		A	A	-	-	A	A	-	-	-	-	B	A	A	-
Hydrobromic Acid	50%	A	A	A	A	A	A	A	A	A	B	A	C	A	B
Hydrobromic Acid	all conc.	A	A	A	A	A	A	A	A	A	-	A	C	C	A
Hydrobromic Acid	sat'd.	A	A	-	-	A	A	A	A	A	-	A	C	B	
Hydrochloric Acid		A	A	-	-	A	A	A	A	A	-	A	C	B	A
Hydrofluoric Acid*	60%	A	A	A	A	A	A	A	A	A	-	A	C	C	A
Hydrogen	100%	A	A	A	A	A	A	A	A	A	A	A	A	A	A
Hydrogen Chloride	dry gas	A	A	A	A	A	A	-	-	-	-	-	-	-	-
Hydrogen Peroxide	30%	B	B	A	-	A	A	A	A	-	-	A	B	B	A
Hydrogen Peroxide	10%	A	A	A	B	A	A	A	A	-	-	A	B	B	A
Hydrogen Sulphide		A	A	A	A	A	A	A	A	A	A	C	B	A	A
Hydroquinone		A	A	A	A	A	A	A	A	-	C	A	-	-	-
Hypochlorous Acid	conc.	A	A	A	A	A	A	A	A	-	-	A	-	A	A
Inks#		A	A	A	A	A	A	A	A	-	-	A	C	A	A
Iodine+	in kl sol'n	B	-	-	-	B	C	C	C	B	C	A	C	C	B
Isopropyl Alcohol	100%	-	-	A	A	A	A	A	A	-	A	A	A	A	A
Lead Acetate	sat'd.	A	A	A	A	A	A	A	A	A	A	A	A	A	A
Lead Nitrate		A	A	-	-	A	A	A	A	A	A	A	A	A	A
Lactic Acid*	20%	A	A	A	A	A	A	A	A	A	A	A	B	B	B
Linseed Oil*	100%	B	C	A	A	A	C	A	A		A	A	A	A	A
Magnesium Carbonate	sat'd.	A	A	A	A	A	A	A	A	A	A	A	A	A	A
Magnesium Chloride	sat'd.	A	A	A	A	A	A	A	A	A	A	A	A	A	A
Magnesium Hydroxide	sat'd.	A	A	A	A	A	A	A	A	A	A	A	A	A	A
Magnesium Nitrate	sat'd.	A	A	A	A	A	A	A	A	A	A	A	A	A	A
Magnesium Sulphate	sat'd.	A	A	A	A	A	A	A	A	A	A	A	A	A	A
Mercuric Chloride	40%	A	A	A	A	A	A	A	A	A	A	A	C	A	C
Mercuric Cyanide	sat'd.	A	A	A	A	A	A	B	A		A	A	C	A	
Mercury		A	A	A	A	A	A	B	A	A	A	A	A	A	A
Methyl Alcohol*	100%	A	A	A	A	A	A	A	A	B	B	C	A	A	C
Methylethyl Ketone*#	100%	B	C	A	B	B	C	C	C	A	C	C	A	A	A
Methylene Chloride*#	100%	C	C	B		C	C	C	C	C	C	C	A	A	B
Milk		A	A	A	A	C	C	A	A	A	A	A	A	A	A
Mineral Oils#		B	C	A	B	A	C	A	A	A	A	A	A	A	A
Molasses		A	A	A	A	A	A	A	A	C	A	A	A	A	A
Naptha*#		B	C			B	C	A	A	C	C	A	A	A	A

Naphthalene*#		B		A	A	C	C	C	C	C	C	A	A	A	A
Nickel Chloride	conc.	A	A	A	A	A	A	A	A	A	A	A	C	A	B
Nickel Nitrate	sat'd.	A	A	A	A	A	A	A	A	A	A	A	B	B	B
Nickel Sulphate	conc.	A	A	A	A	A	A	A	A	A	A	A	B	B	B
Nicotine*	dilute	A	A	A	A	A	A	A	A						
Nitric Acid	0-30%	A	A	C	C	A	A	A	A	B	A	A	A	A	A
Nitric Acid+	30-50%	A	B	C	C	A	B	B	B	B	A	A	A	A	A
Nitric Acid+	70%	A	B	C	C	A	B	C	C	C	A	A	A	A	A
Nitric Acid+	95-98%	C	C	C	C	C	C	C	C	C		A	A	A	A
Nitrobenzene*#	100%	C	C	C	C	C	C	C	C	C	C	B	A	A	C
n-Octane		A	A			A	A								
Oleic Acid		B	C	A	B	A	C	C	A	B	C	B	B	C	B
Oxalic Acid*	sat'd.	A	A	A	B	A	A	A	C	A	B	A	B	C	B
Perchloroethylene#		C	C			C	C	C	B	C	C	A	A	A	B
Phosphoric Acid	95%	A	A	A	A	A	B	B	A	B	B	A	B	B	A
Photographic Solutions		A	A	A	A	A	A	A	A	B	A	A	A	A	A
Plating Solutions*															
Brass		A	A	A	A	A	A	A	A	A	A	A	A	A	A
Cadium		A	A	A	A	A	A	A	A	C	C	A	A	C	A
Chromium		A	A	A	A	A	A	A	A		B	A	C	C	C
Copper		A	A	A	A	A	A	A	A		A	A	A	A	A
Gold		A	A	A	A	A	A	A	A		A	A	A	A	A
Indium		A	A	A	A	A	A	A	A		A	A			
Lead		A	A	A	A	A	A	A	A			A	C	C	A
Nickel		A	A	A	A	A	A	A	A			A	C	A	C
Rhodium		A	A	A	A	A	A	A	A			A	A	C	A
Silver		A	A		A	A	A	A	A			A	C	C	A
Tin		A	A	A	A	A	A	A	A			A	C	A	A
Zinc		A	A	A	A	A	A	A	A		A	A	C	A	B
Potassium Bicarbonate	sat'd.	A	A	A	A	A	A	A	A	A	A	A	B	A	B
Potassium Bromide	sat'd.	A	A	A	A	A	A	A	A	A	A	A	B	A	B
Potassium Bromate	10%	A	A	A	A	A	A	A	A	A	A	A	B	A	B
Potassium Carbonate		A	A	A	A	A	A	A	A	A	A	A	B	A	B
Potassium Chlorate	sat'd.	A	A	A	A	A	A	A	A	A	A	A	B	A	B
Potassium Chloride	sat'd.	A	A	A	A	A	A	A	A	A	A	A	B	A	B
Potassium Chromate	40%	A	A	A	A	A	A	A	A	A	A	A	B	A	B
Potassium Cyanide	sat'd.	A	A	A	A	A	A	A	A	A	A	A	B	A	B
Potassium Dichromate	40%	A	A	A	A	A	A	A	A	A	A	A	B	A	B
Potassium Ferri/Ferro Cyanide	sat'd.	A	A	A	A	A	A	A	A	A	A	A	B	A	B
Potassium Fluoride		A	A	A	A	A	A	A	A	A	A	A	B	A	B
Potassium Hydroxide	conc.	A	A	A	A	A	A	A	A	A	B	B	B	A	B
Potassium Nitrate	sat'd.	A	A	A	A	A	A	A	A	A	A	A	B	A	B
Potassium Perborate	sat'd.	A	A	A	A	A	A	A	A	A	A	A	B	A	B
Potassium Perchlorate	10%	A	A	A	A	A	A	A	A	A	A	A	B	A	B
Potassium Permanganate	20%	A	A	A	A	A	A	A	A	A	A	A	B	A	B
Potassium Persulphate	sat'd.	A	A			A	A	A	A	A	A	A	B	A	B

Potassium Sulphate	conc.	A	A	A	A	A	A	A	A	A	C	A	B	A	B
Potassium Sulphide	conc.	A	A	A	A	A	A	A	A	A	C	A	B	A	B
Potassium Sulphite	conc.	A	A	A	A	A	A	A	A	A	C	A	B	A	B
Propargyl Alcohol*		A	A			A	A								
n-Propyl Alcohol*		A	A	A	A	A	A	A			A	A	A	A	A
Propylene Dichloride*#	100%	C	C	C	C	C	C	A				A	C	A	B
Propylene Glycol*		A	A			A	A	C			C	A	B	A	B
Pyridine*		A		A		A	C	C	B	B	C	C	A	B	B
Resorcinol	sat'd.	A	A			A	A								
Sallcylic Acid	sat'd.	A	A			A	A	A	A	A	A	A	A	A	A
Sea Water		A	A	A	A	A	A	A	A	A	A	A	A	A	A
Selenic Acid		A	A			A	A	A	A	A					
Shortening*		A	A	A	A	A	A	A	A	A	A	A	A	A	A
Silver Nitrate Solution		A	A	A	A	A	A	A	A	A	A	A	A	A	A
Soap Solution*	any con	A	A	A	A	A	A	A	A	A	A	A	A	A	A
Sodium Acetate	sat'd.	A	A	A	A	A	A	B	B	A	B	C	B	A	A
Sodium Benzoate	35%	A	A	A	A	A	A	A	A	A	A	A	A	A	A
Sodium Biscarbonate	sat'd.	A	A	A	A	A	A	A	A	A	B	C	B	B	B
Sodium Bisulphate	sat'd.	A	A	A	A	A	A	A	A	A	C	A	B	B	A
Sodium Bisulphite	sat'd.	A	A	A	A	A	A	A	A	A	A	A	B	B	A
Sodum Borate		A	A	A	A	A	A	A	A	A	A	A	B	A	A
Sodium Bromide	dilute	A	A	A	A	A	A	A	A	A	A	A	A	A	A
Sodium Carbonate	conc.	A	A	A	A	A	A	A	A	A	A	C	A	A	A
Sodium Chlorate	sat'd.	A	A	A	A	A	A	A	A	A	A	A	B	A	B
Sodium Chloride	sat'd.	A	A	A	A	A	A	A	A	A	A	A	C	A	A
Sodium Cyanide		A	A	A	A	A	A	A	A	A	A	A	B	A	A
Sodium Dichromate	sat'd.	A	A	A	A	A	A	A	A	A	A	A	A	A	A
Sodium Ferri/Ferro Cyanide	sat'd.	A	A	A	A	A	A	A	A	A	A	A	A	A	A
Sodium Fluoride	sat'd.	A	A	A	A	A	A	A	A	A	C	A	C	A	A
Sodium Hydroxide	conc.	A	A	A	A	A	A	A	A	A	B	A	B	B	B
Sodium Hypochlorite	1	A	A	A	B	B	B	B	B	B	C	A	C	C	B
Sodium Nitrate		A	A	A	A	A	A	A	A	A	B	A	B	A	B
Sodium Sulphate		A	A	A	A	A	A	A	A	A	B	A	B	A	B
Sodium Sulphide	sat'd.	A	A	A	A	A	A	A	A	A	A	A	B	A	B
Sodium Sulphite	sat'd.	A	A	A	A	A	A	A	A	A	A	A	B	A	B
Stannic Chloride	sat'd.	A	A	A	A	A	A	A	A	B	C	A	C	A	B
Stannous Chloride	sat'd.	A	A	A	A	A	A	A	A	A	A	A	A	A	B
Starch Solution*	sat'd.	A	A	A	A	A	A	A	A	A	A	A	A	A	A
Stearic Acid*	100%	A	A	A	A	A	A	B	B	B	B	A	A	A	B
Sulphuric Acid	0-50%	A	A	A	B	A	A	A	A	B	C	A	C	C	B
Sulphuric Acid +	70%	A	B	A	B	A	B	A	A	B	C	A	C	C	B
Sulphuric Acid +	80%	A	C	C	C	A	B	A	A	B		A	C	C	B
Sulphuric Acid +	96%	B	C	C		A	B	C	B	B	C	A	C	C	B
Sulphuric Acid +	98-conc.	B	C	C		B	C	C	B	B	C	A	C	C	B
Sulphuric Acid +	fuming	C	C	C	C	C	C	C	B	C	C	A	C	C	C
Sulphurous Acid		A	A	A	A	A	A	A	A	B	C	A	B	A	B
Tallow#		A		A	A	A	B					A	A		
Tannic Acid*	sat'd.	A	A	A	A	A	A	A	A	A	B	A	A	A	B
Tartaric Acid		A	A	A	A	A	A	A	A	B	B	A	C	A	B
Tetrolydrofuran*#		B	C	C	C	C	C	C	C	B	C	C	A	A	A
Titanium Tetrachloride*	sat'd.	C				C	C						A		

Toluene*		B	B	C	C	C	C	C	C	C	C	C	A	A	A
Trichloroethylene*#		C	C	C	C	C	C	C	C	C	C	A	B	A	B
Triethylene Glycol*		A	A			A	A						A	A	A
Trisodium Phosphate	sat'd.	A	A	A	A	A	A	A	A	A	A	A	A	A	A
Turpentine#		C	C	C	C	C	C	B	B	C	C	A	A	B	B
Urea	30%	A	A	A	A	A	A	B	B				A		
Urine		A	A	A	A	A	A	A	A	A	C	A	A		
Vanilla Extract*		A	A	A	A	A	A								
Vinegar		A	A	A	A	A	A	A	A	A	C	A	A	A	A
Water		A	A	A	A	A	A	A	A	A	A	A	A	A	A
Wetting Agent*		A	A	A	A	A	A								
Whiskey*		A	A	A	A	C	C	A	A	A	A	A	A	A	A
Wines*		A	A	A	A	A	C	C	A	A	A	A	A	A	A
Xylene#		C	C	C	C	C	C	C	C	C	C	C	A	A	A
Yeast		A	A	A	A	A	A	A	A	A	A	A	A	A	A
Zinc Bromide	sat'd.	A	A			A	A	A	A	A	A	A	A	A	A
Zinc Carbonate	sat'd.	A	A			A	A	A	A	A	A	A	A	A	A
Zinc Chloride	sat'd.	A	A	A	A	A	A	A	A	A	A	A	A	A	A
Zinc Oxide	sat'd.	A	A	A	A	A	A	A	A	A	A	A	A	A	A
Zinc Stearate		A	A			A	A	A	A	A	A	A	A	A	A
Zinc Sulphate	sat'd.	A	A	A	A	A	A	A	A	A	A	A	A	A	A

AlltanksCom LLC.

Ask for Art Woods

Email Art at sales@tanksystems.com

Mail: *PO Box 680747 Houston, Texas 77268*

Ship: *32926 Tamina - Magnolia, Texas 77354*

Phones: *800.537.9444*

01/13/2013

INSPECTION CHECKLIST FOR INDUSTRIAL TANKS

Work Order Number: 344120 SO Number: 142627 Order Qty: 1 Part Number 5320000N97401

Tank Description: Size 7400CB

Specific Gravity 1.5 Material HD/NAT Serial Number #1301275495

Circle YES or NO or NA Below as Required

Audit: Yes No If yes, attach audit. Correct Audit ~~600 psi~~ 750 psi Other _____

Hydro test: Yes No Percent Gel test 65% minimum: _____ or NA

Drop dart: Pass Fail NA / NF

Sumo Test: Pass Fail NA What psi _____ How long _____

IF THIS IS A NO HOLES NO FITTING TANK SKIP SECTIONS A & B. NHNF: Yes

SECTION A - FITTINGS – SPECIFICATION:

Note: Proper application and installation of fittings are critical to the success of an SII tank. Please follow this procedure.

Is the application correct? Circle YES or NO or NA

- Are we using the correct gaskets per the order? Viton or Epdm
- Is the material correct for encapsulated bolts? Stainless (natural) Hastaloy (yellow) Titanium (green)
- Do the pvc fitting U-vents, siphon tubes, etc. have enough glue? (see evidence in the joints) . . Yes No NA

SECTION B - FITTINGS – LOCATION:

- Fitting layout per cut sheet correct? . . . . . Yes No

If no, explain discrepancies _____

Are the hole sizes correct for the fittings? . . . . . Yes No

Are the gasket areas smooth and even thicknesses on the inside of the tank? (no bumps) . . . . . Yes No

Have the fittings been torque to 1/3 compression on the gasket? . . . . . Yes No

If no, explain (hand tight), etc. _____

SECTION C - EXTRA'S – SUPPLEMENTAL HARDWARE: (includes ladders, down tubes, sight gages, additional plumbing, etc.)

The following have been installed and found to fit and function properly.

Level sensor Y or N Settings: Tank height _____ Fluid level _____ Gallons per inch _____

Down pipe Y or N Welds tested with soft mallet Y or N

Other Items

* NHNF TANK - BCC 1/24/13

TANK washed inside/out (PIO)

Final Buyoff: Production M 1-25-13 Quality BC 1-25-13

(I have checked the above mentioned tank and documentation and have found all to be acceptable.)

SII "7,400 30 DEGREE C.B." 142" DIA. VERTICAL, CONE BOTTOM TANK

9.823	OVER ALL CYL. HEIGHT (FEET)	15.996	DOME HEIGHT (INCHES)
600	TENSILE STRENGTH (PSI)	613.36	CAP. IN DOME TOP
8.49	SIDE WALL HEIGHT (FEET)	7794.16	MIN. TANK CAP.(GAL.)
142	DIAMETER (INCHES)		CHARGE WEIGHT (LBS.)
1.5	SPECIFIC GRAVITY	_____	OVEN CYCLE TIME (MIN)
0.4	AVG. THICKNESS TOP (INCHES)	_____	OVEN TEMP. (DEG."F")
	BOTTOM THICKNESS (INCHES)	_____	DELAY (MIN.)
	FEET FROM OUT SIDE EDGE	_____	COOLING AIR (MIN.)
0.50	0.5 ` # 491	_____	COOLING WATER (MIN.)
0.46	1 ` # 480	_____	COOLING AIR (MIN)
0.39	2 ` # 466	_____	OVEN DAMPER American Process
0.3	CENTER # 415	_____	MACHINE/ARM ROTATION
			50 / 42627

DIST.FROM BOTTOM(FT)	DESIGN WALL		SIDE THICKNESS CUTOUT	9.29	18.59	27.88	(FEET)
29	0.00	# #					DATE: 7-24-13
28	0.00	# #					SERIAL #: 130/225485
27	0.00	# #					POWDER TYPE: EXOY
26	0.00	# #					INSTRUMENT CALIBRATED
25	0.00	# #					CUTOUT:
24	0.00	# #					LOT #:
23	0.00	# #					PART COLOR: NAT
22	0.00	# #					PIGMENT WEIGHT (GRAMS
21	0.00	# #					GEL %:
20	0.00	# #					DROP DART WEIGHT:
19	0.00	# #					DROP DART HEIGHT:
18	0.00	# #					DROP DART TEMPERATUR
17	0.00	# #					DROP DART RESULTS:
16	0.00	# #					Q.A. PERSONNEL:
15	0.00	# #					COMMENTS:
14	0.00	# #					
13	0.00	# #					
12	0.00	# #					
11	0.00	# #					
10	0.00	# #					
9	0.00	# #					
8	0.30	# #					
7	0.30	# #					
6	0.30	# #					
5	0.30	# #					
4	0.35	# #		408		415	
3	0.42	# #		449		665	
2	0.50	# #		510		529	
1	0.58	# #		571		525	
0.5	.61			596		611	

tobey wade
STRUCTURAL ENGINEERS

RECEIVED
SEP 24 2013
ENVIRONMENTAL PROTECTION

September 20, 2013
Project No. R405-13-13

Ms. Tracy Buono
Facility/Operations Manager
PSC FERNLEY FACILITY
2095 Newlands Drive East
Fernley, NV 89408

RE: TANK 302 CERTIFICATION

Dear Ms. Buono:

In accordance with the Fernley Facility Amended Tank Replacement Plan dated December 17, 2012, and Appendix D-6 of the pending July 2012 RECRA Permit, each new tank is required to be certified by Independent Registered Professional Engineers (IRPE's) prior to being placed into service. This letter has been prepared to document the evaluation of Tank 302 as performed by Tobey-Wade Consulting.

Background

Tank 302 is a virgin linear polyethylene cone-bottom tank as manufactured by Snyder Industries, Inc. and it has a 7,400 gallon capacity. Snyder Industries has provided data relative to the tank's strength.

Jaik Choi Associates has conducted a structural evaluation of the tank to determine the foundation requirements under static and dynamic (seismic) loads. Jaik Choi Associates also conducted a stability analysis and designed anchorage for the tank.

Certification of the tank shell's compatibility with the proposed waste stream has been provided by others.

NEVADA OFFICE
648 LANDER STREET ■ RENO, NEVADA 89509 ■ TEL: (775) 324.7757 ■ FAX: (775) 324.7797

Findings

Based on our evaluation, the following systems are hereby certified as being in compliance with the Amended Tank Replacement plan:

- Tank 302 has sufficient strength to contain the proposed waste materials without rupturing based on wall thickness information provided by Snyder Industries.
- Tank 302 is situated on a reinforced concrete foundation system which is capable of adequately supporting the tank and its contents under static and dynamic conditions based on the analysis performed by Jaik Choi Associates.
- Tank 302 is located in an area with sufficient secondary containment as required by 40 CFR Ch. I, 264.193.
- Tank 302 is anchored to resist overturning when subjected to site-specific 2006 International Building Code level seismic events based on the analysis performed by Jaik Choi Associates.
- Tank 302 is anchored to prevent sliding when subjected to site-specific 2006 International Building Code level seismic events based on the analysis performed by Jaik Choi Associates.
- The process piping fill and discharge connections have been inspected and found to be undamaged and with no evidence of leakage. The piping connections are adequately attached to the tank to prevent displacement during an earthquake. The associated Process Piping inspection form is attached.
- Special Inspection of the epoxy anchor bolt installation was performed as required by the International Building Code. A copy of the Special Inspection report is attached.
- Tank 302 has been subjected to a 24-hour leak test and found to be watertight. The Tank Leakage Test results are included in the Tank Inspection Form, copy attached.
- The exterior of Tank 302's shell wall has been inspected and found to be undamaged. The Tank Shell Inspection results are included in the Tank Inspection Form, copy attached.

Tobey-Wade Consulting witnessed the tank leakage test and conducted the tank shell inspection, under my direct supervision. Special Inspections were performed by inspectors from Nortech Consultants based on anchorage requirements provided by Jaik Choi Associates.

Certification Statement

I certify under penalty of law that this report and all attachments were prepared under my direction and supervision in accordance with a system developed to assure that qualified personnel properly gather and evaluate the information submitted. Based on my inquiry of the person or persons who manage the system or those persons directly responsible for gathering the information, the information, submitted is, to the best of my knowledge and belief, true, accurate, and complete. I am aware that there are significant penalties for submitting false information, including the possibility of fines and imprisonment for knowing violations.

This report has been prepared in accordance with accepted engineering practices and is subject to the assumptions and limitations stated in the report. Also note that this certification covers the aforementioned aspects of Tank 302 only.

Please feel free to contact me at your convenience should you have any questions relating to our findings.

Sincerely,
TOBEY-WADE CONSULTING

Terrence R. Tobey

TERRENCE R. TOBEY, P.E., S.E.
Principal Structural Engineer

Exp.
6·30·14

Tank Data Sheet

RCRA Regulated? YES

Tank Location: Dewatering Area

Tank Name: Post-Treatment Tank

Tank Numbers: #301, 302

Process Description: Storage/Settling of Post-Treatment Effluent

Vessel Fluid: Neutralized/Treated Liquids w/Treatment Chemical Residuals

Specific Gravity: <1.50

Freeboard At Working Vol ($FT.^3$): 52.6

Normal Operating Pressure: ATMOSPHERIC

Temperature (F°) AMBIENT

	Material	Thickness	Type
Bottom	Virgin linear polyethylene	0.61" AVG	cone
Shell	Virgin linear polyethylene	0.5 " AVG	CYLINDRICAL-VERTICAL
Roof	Virgin linear polyethylene	0.4" avg.	dome

Working Volume (USG): 7,400 gallons

Insulation: NONE

Nominal Volume (USG): 7,794 gallons

Method of Construction: rotational molding process

Tank O.D. (ft): 11' 10"

Tank Height or Length (ft): 14' 11"

Design Code Used: IBC 2006 AISC 13th Edition

Date In Service: PLANNED TANKS

Anchorage: seismic restraints bolted to concrete. Anchorage designs per 2006 IBC.

Connections:

Item No:	Size (In.)	Gasket	Description
A.	24"		PE Threaded-vented manway w/22" access
B.	3"		flanged drain
C.	3"		flanged drain

Tank Sketch:

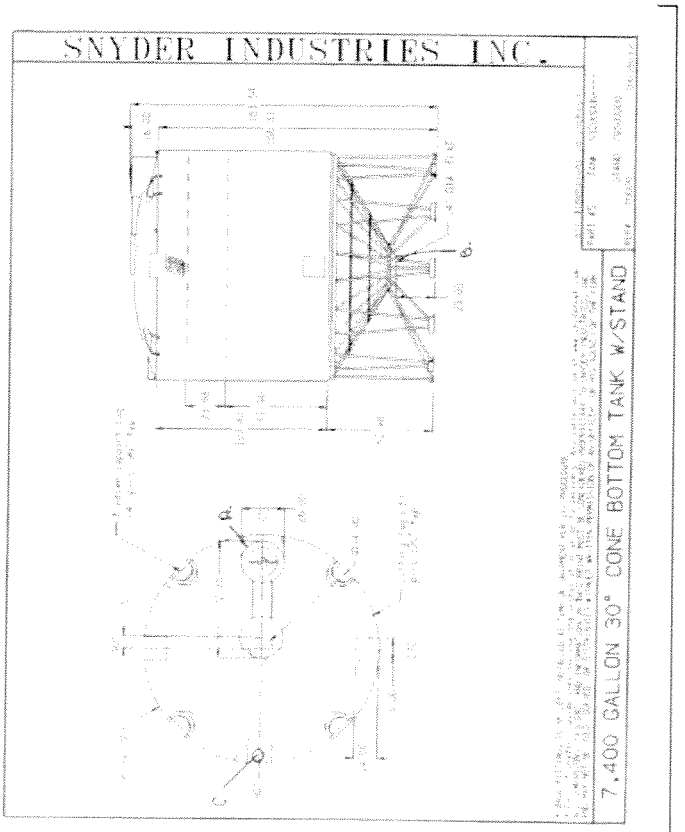

Interior Coating: high density linear polyethylene resin as manufactured by ExxonMobil Chemical

Exterior Coating: high density linear polyethylene resin as manufactured by ExxonMobil Chemical

Tank Mfger: Snyder Industries Inc.

tobey wade
STRUCTURAL ENGINEERS

April 4, 2013
Project No. R405-06-13

Ms. Tracy Buono
Facility/Operations Manager
PSC FERNLEY FACILITY
2095 Newlands Drive East
Fernley, NV 89408

RE: TANK 302 INTERIM CERTIFICATION

Dear Ms. Buono:

In accordance with the Fernley Facility Amended Tank Replacement Plan dated December 17, 2012, and Appendix D-6 of the pending July 2012 RECRA Permit, each new tank is required to be certified by Independent Registered Professional Engineers (IRPE's) prior to being placed into service. This letter has been prepared to document the evaluation of Tank 302 as performed by Tobey-Wade Consulting.

It should be noted that Tank 302 currently has permanent bulkhead fittings with valves for connection of temporary discharge lines. A temporary fill line is attached to a permanent bulkhead fitting. The permanent process piping servicing Tank 302 will be installed in Phase 3 as outlined in the above-referenced documents. Accordingly, this certification is being provided as an interim certification. Final certification of Tank 302 will be provided after the permanent piping and all other associated permanent systems have been installed and inspected.

Background

Tank 302 is a virgin linear polyethylene cone-bottom tank as manufactured by Snyder Industries, Inc. and it has a 7,400 gallon capacity. Snyder Industries has provided data relative to the tank's strength.

Jaik Choi Associates has conducted a structural evaluation of the tank to determine the foundation requirements under static and dynamic (seismic) loads. Jaik Choi Associates also conducted a stability analysis and designed anchorage for the tank.

Certification of the tank shell's compatibility with the proposed waste stream has been provided by others.

Findings

Based on our evaluation, the following systems are hereby certified as being in compliance with the Amended Tank Replacement plan:

- Tank 302 has sufficient strength to contain the proposed waste materials without rupturing based on wall thickness information provided by Snyder Industries.
- Tank 302 will be situated on a reinforced concrete foundation system which is capable of adequately supporting the tank and its contents under static and dynamic conditions based on the analysis performed by Jaik Choi Associates.
- Tank 302 will be located in an area with sufficient secondary containment as required by 40 CFR Ch. I, 264.193.
- Tank 302 is anchored to resist overturning when subjected to site-specific 2006 International Building Code level seismic events based on the analysis performed by Jaik Choi Associates.
- Tank 302 is anchored to prevent sliding when subjected to site-specific 2006 International Building Code level seismic events based on the analysis performed by Jaik Choi Associates.
- The process piping fill and discharge connections have been inspected and found to be undamaged and with no evidence of leakage. The piping connections are adequately attached to the tank to prevent displacement during an earthquake. The associated Process Piping inspection form is attached.
- Special Inspection of the epoxy anchor bolt installation was performed as required by the International Building Code. A copy of the Special Inspection report is attached.
- Tank 302 has been subjected to a 24-hour leak test and found to be watertight. The Tank Leakage Test results are included in the Tank Inspection Form, copy attached.
- The exterior of Tank 302's shell wall has been inspected and found to be undamaged. The Tank Shell Inspection results are included in the Tank Inspection Form, copy attached.

Tobey-Wade Consulting witnessed the tank leakage test and conducted the tank shell inspection, under my direct supervision. Special Inspections were performed by inspectors from Nortech Consultants based on anchorage requirements provided by Jaik Choi Associates.

Certification Statement

I certify under penalty of law that this report and all attachments were prepared under my direction and supervision in accordance with a system developed to assure that qualified personnel properly gather and evaluate the information submitted. Based on my inquiry of the person or persons who manage the system or those persons directly responsible for gathering the information, the information, submitted is, to the best of my knowledge and belief, true, accurate, and complete. I am aware that there are significant penalties for submitting false information, including the possibility of fines and imprisonment for knowing violations.

This report has been prepared in accordance with acceptable engineering practices and is subject to the assumptions and limitations stated in the report. Also note that this certification covers the aforementioned aspects of Tank 302 only.

Please feel free to contact me at your convenience should you have any questions relating to our findings.

Sincerely,
TOBEY-WADE CONSULTING

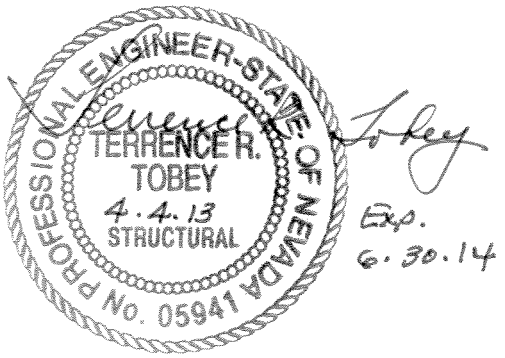

TERRENCE R. TOBEY, P.E., S.E.
Principal Structural Engineer

NORTECH Geotechnical/Civil Consultants, Ltd.

FIELD CONSTRUCTION INSPECTION REPORT

PROJECT PSC Environmental JOB NO. 14441-28C

LOCATION 2095 Newlands Drive, Fernley, Nevada REPORT NO. 8

CONTRACTOR L & H Concrete WEEK ENDING 03-16-12

Work Description

March 20 - On site for epoxy inspection on anchor bolts (3/4") for tank pad 302. Holes were drilled to proper embed depth and cleaned out thoroughly. Epoxy and anchor bolts were placed in accordance with approved structural drawings. (MSV)

TANK INSPECTION FORM

OWNER: Philip Services Corporation / 21 EMI
PSC Fernley Facility
2095 Newlands Drive East
Fernley, NV 89408
(775)575-2760

TANK NO.: 302 Cone-bottom

TANK SHELL INSPECTION

Date Inspected: March 21, 2013

Findings: No scratches, etc. Shell is OK

TANK ANCHORAGE STRUCTURAL OBSERVATION

Type of Anchorage System: Jaik Choi Calcs/Snyder Industries Drawings

Date Inspected: March 21, 2013

# of Anchor Plates/Tie-downs: 12 ℄ / 4 tie downs

AB Type, Diameter, Spacing and Number/plate: 3/4" ϕ (2 per ℄)

Size of Anchor Plate & Contact with Tank: NA (welded conn.)

Edge Distances: 10" @ front

Special Inspection Completed? Yes

TANK LEAKAGE TEST

Date Inspected: March 21, 2013 ① Water Level below Inspection Hatch: 24 1/8" below lower l.p

Date of Re-inspection: March 22, 2013 ② Water Level below Inspection Hatch: 24 1/8"

3-21-13 told to Mop up water

Shell Leakage? (3.22-13) No Leakage observed

Leakage on Floor/Drain Pan at Manifold? (3.22.13) No Leakage observed

① **INSPECTOR:** Terence Tobey **DATE:** March 21, 2013

② **INSPECTOR:** Terence Tobey **DATE:** March 22, 2013

PROCESS PIPING INSPECTION FORM

Philip Services Corporation / 21 EMI
PSC Fernley Facility
2095 Newlands Drive East
Fernley, NV 89408
(775)575-2760

Tank Number: 302

Date Inspected: April 3, 2013

Fill Line Assembly:

Number of Fill Line Assemblies: 1 Fill Line Assembly

Description: A bulkhead fitting at the top of the tank is the only permanent piping in the fill line assembly. A temporary fill line is attached to the bulkhead fitting. There was no damage to the process pipe connection or to the tank shell. No evidence of leaking found. The permanent piping is secured and stable.

Discharge Line Assembly:

Number of Discharge Line Assemblies: 1 Discharge Line Assembly

Description: The bulkhead fitting below the tank to the threaded valve connection is the only permanent piping in the discharge line assembly. A temporary discharge line is attached to the valve connection. There was no damage to the process piping connection or to the tank shell. No evidence of leaking found. The permanent piping is secured and stable.

INSPECTOR: Brian Gr **DATE:** April 3, 2013

tobey wade
STRUCTURAL ENGINEERS

August 7, 2013
Project No. R405-13-13

Ms. Tracy Buono
Facility/Operations Manager
PSC FERNLEY FACILITY
2095 Newlands Drive East
Fernley, NV 89408

RE: TANK 302 CERTIFICATION

Dear Ms. Buono:

In accordance with the Fernley Facility Amended Tank Replacement Plan dated December 17, 2012, and Appendix D-6 of the pending July 2012 RECRA Permit, each new tank is required to be certified by Independent Registered Professional Engineers (IRPE's) prior to being placed into service. This letter has been prepared to document the evaluation of Tank 302 as performed by Tobey-Wade Consulting.

Background

Tank 302 is a virgin linear polyethylene cone-bottom tank as manufactured by Snyder Industries, Inc. and it has a 7,400 gallon capacity. Snyder Industries has provided data relative to the tank's strength.

Jaik Choi Associates has conducted a structural evaluation of the tank to determine the foundation requirements under static and dynamic (seismic) loads. Jaik Choi Associates also conducted a stability analysis and designed anchorage for the tank.

Certification of the tank shell's compatibility with the proposed waste stream has been provided by others.

Findings

Based on our evaluation, the following systems are hereby certified as being in compliance with the Amended Tank Replacement plan:

- Tank 302 has sufficient strength to contain the proposed waste materials without rupturing based on wall thickness information provided by Snyder Industries.
- Tank 302 will be situated on a reinforced concrete foundation system which is capable of adequately supporting the tank and its contents under static and dynamic conditions based on the analysis performed by Jaik Choi Associates.
- Tank 302 will be located in an area with sufficient secondary containment as required by 40 CFR Ch. I, 264.193.
- Tank 302 is anchored to resist overturning when subjected to site-specific 2006 International Building Code level seismic events based on the analysis performed by Jaik Choi Associates.
- Tank 302 is anchored to prevent sliding when subjected to site-specific 2006 International Building Code level seismic events based on the analysis performed by Jaik Choi Associates.
- The process piping fill and discharge connections have been inspected and found to be undamaged and with no evidence of leakage. The piping connections are adequately attached to the tank to prevent displacement during an earthquake. The associated Process Piping inspection form is attached.
- Special Inspection of the epoxy anchor bolt installation was performed as required by the International Building Code. A copy of the Special Inspection report is attached.
- Tank 302 has been subjected to a 24-hour leak test and found to be watertight. The Tank Leakage Test results are included in the Tank Inspection Form, copy attached.
- The exterior of Tank 302's shell wall has been inspected and found to be undamaged. The Tank Shell Inspection results are included in the Tank Inspection Form, copy attached.

Tobey-Wade Consulting witnessed the tank leakage test and conducted the tank shell inspection, under my direct supervision. Special Inspections were performed by inspectors from Nortech Consultants based on anchorage requirements provided by Jaik Choi Associates.

Certification Statement

I certify under penalty of law that this report and all attachments were prepared under my direction and supervision in accordance with a system developed to assure that qualified personnel properly gather and evaluate the information submitted. Based on my inquiry of the person or persons who manage the system or those persons directly responsible for gathering the information, the information, submitted is, to the best of my knowledge and belief, true, accurate, and complete. I am aware that there are significant penalties for submitting false information, including the possibility of fines and imprisonment for knowing violations.

This report has been prepared in accordance with accepted engineering practices and is subject to the assumptions and limitations stated in the report. Also note that this certification covers the aforementioned aspects of Tank 302 only.

Please feel free to contact me at your convenience should you have any questions relating to our findings.

Sincerely,
TOBEY-WADE CONSULTING

Terrence R. Tobey

TERRENCE R. TOBEY, P.E., S.E.
Principal Structural Engineer

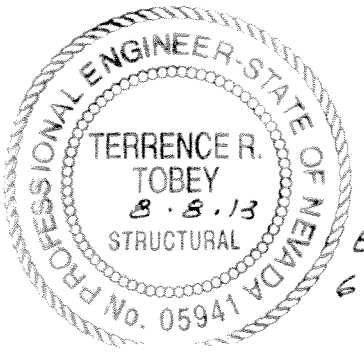

NORTECH Geotechnical/Civil Consultants, Ltd.

FIELD CONSTRUCTION INSPECTION REPORT

PROJECT PSC Environmental JOB NO. 14441-28C

LOCATION 2095 Newlands Drive, Fernley, Nevada REPORT NO. 8

CONTRACTOR L & H Concrete WEEK ENDING 03-16-12

Work Description

March 20 - On site for epoxy inspection on anchor bolts (3/4") for tank pad 302. Holes were drilled to proper embed depth and cleaned out thoroughly. Epoxy and anchor bolts were placed in accordance with approved structural drawings. (MSV)

TANK INSPECTION FORM

OWNER: Philip Services Corporation / 21 EMI
PSC Fernley Facility
2095 Newlands Drive East
Fernley, NV 89408
(775)575-2760

TANK NO.: 302 Cone-bottom

TANK SHELL INSPECTION

Date Inspected: March 21, 2013

Findings: No scratches, etc. Shell is OK

TANK ANCHORAGE STRUCTURAL OBSERVATION

Type of Anchorage System: Jaik Choi Calcs/Snyder Industries Drawings

Date Inspected: March 21, 2013

# of Anchor Plates/Tie-downs: 12 ℄ / 4 tie downs

AB Type, Diameter, Spacing and Number/plate: 3/4" ϕ (2 per ℄)

Size of Anchor Plate & Contact with Tank: NA (welded conn.)

Edge Distances: 10" @ front

Special Inspection Completed? Yes

TANK LEAKAGE TEST

Date Inspected: March 21, 2013 ① Water Level below Inspection Hatch: 24⅛" below lower lip

3-21-13 Date of Re-inspection: March 22, 2013 ② Water Level below Inspection Hatch: 24⅛"

told to mop up water

Shell Leakage? (3.22-13) No Leakage observed

Leakage on Floor/Drain Pan at Manifold? (3.22.13) No Leakage observed

① INSPECTOR: Terence Tobey DATE: March 21, 2013

② INSPECTOR: Terence Tobey DATE: March 22, 2013

PROCESS PIPING INSPECTION FORM

Philip Services Corporation / 21 EMI
PSC Fernley Facility
2095 Newlands Drive East
Fernley, NV 89408
(775)575-2760

Tank Number: 302

Date Inspected: April 3, 2013

Fill Line Assembly:

Number of Fill Line Assemblies: 1 Fill Line Assembly

Description: A bulkhead fitting at the top of the tank is the only permanent piping in the fill line assembly. A temporary fill line is attached to the bulkhead fitting. There was no damage to the process pipe connection or to the tank shell. No evidence of leaking found. The permanent piping is secured and stable.

Discharge Line Assembly:

Number of Discharge Line Assemblies: 1 Discharge Line Assembly

Description: The bulkhead fitting below the tank to the threaded valve connection is the only permanent piping in the discharge line assembly. A temporary discharge line is attached to the valve connection. There was no damage to the process piping connection or to the tank shell. No evidence of leaking found. The permanent piping is secured and stable.

INSPECTOR: Brian Gr DATE: April 3, 2013

Providing Tomorrow's Solutions Today.

March 21, 2013

Nevada Division of Environmental Protection
901 S. Stewart Street, Suite 4001
Carson City, NV 89701

Attn: Mr. Mike Leigh

RE: Self Disclosure, Non-Compliance to Appendix D-6 of the pending July 2012 RECRA Permit

Dear Mr. Leigh:

The purpose of this letter is to self-disclose the non-compliance to Appendix D-6 of the pending July 2012 RECRA Permit as it relates to Phase II specific tank manufacturers and design specifications.

Prior to initiation of the Phase II Tank Replacement project, it was determined that alternate tank manufacturers (Snyder Industries for Linear Polyethylene and Equipment Pro, Inc. for Carbon Steel tanks) were identified for the project. As was completed by the previous manufacturer, the tanks were designed and certified for their intended use.

For clarity of the supplied documentation related to the polyethylene tanks, I've cross referenced below the part number to the specific unit.

7140 is a 6500 gallon tank (307)
5350 is 1250 gallon tank (303 through 306)
5320 is 7400 gallon tank (301 and 302)

If you have any questions or need additional clarification, please do not hesitate to contact me at 775-722-0554 or you may contact me at tracy.buono@pscnow.com.

Sincerely,

Tracy Buono
Facility Manager
21st Environmental Management of Nevada, LLC

030913

AlltanksCom LLC
PO 680474 - Houston, Texas 77268
281.825.4000 – 281.825.4099
gene@alltanks.com

Terrence Tobey,

648 Lander Street Reno,

Nv 89509

Based on the following information, I certify that the tank design and tanks made of virgin linear polyethylene as manufactured by Snyder Industries are suitable for the storage of chemistry as indicated below, in the waste processing stream of the PSC Facility in Fernley NV.

My research indicates that relative to the structural suitability and chemical compatibility of the 100% linear polyethylene tanks, Tank No# 301-307, as fabricated by Snyder, these tanks are approved for long time storage of the below solutions at temperatures up to 150°F.

Alkaline – pH 8-14:

Acids typically less than 20% - pH – 0-6:

Neutral solutions - pH 4-10:

Bleach solutions - pH 11-12:

I have reviewed Snyder Company's product information provided on tank design and compatibility with the information submitted by PSC.

Thanks

Gene Vincent, President

AlltanksCom LLC

JAIK CHOI & ASSOCIATES
Structural Engineering
1215 PORTSIDE WAY
CCORONA DEL MAR, CA 92625
(949) 706-7789 Fax (424) 239-2666
email:jcse@msn.com

Structural Calculations for

Seismic Restraint System for
Ground Supported Storage Tanks (6500 gal Flat, 12500 gal Flat & 7400 gal Cone w/ S.G.=1.4)
Located at PSC Fernley, 2095 Newlands Drive, E, Fernley, NV 89408

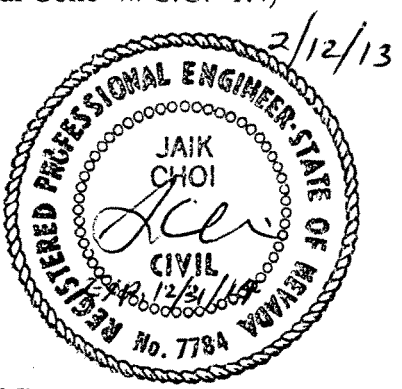

2/12/13

Prepared for

AlltanksCom LLC
Equipment Pro Inc.

Design Criterion

1. Codes ; International Building Code 2006 Edition.
   ; California Building Code 2007 Edition. (ASCE 7.05)
   ; AISC 13th Edition.
2. Steel : ASTM A-36 for angles & plates.
3. Cable ; 7x19 Galv. Steel or Type 304 or 316 S.S.
4. Bolts ; Hilti HAS-E Rod Standard or equal
5. Epoxy Adhesive ; Hilti HIT-RE500SD
6. Concrete ; f'c = 4,000 psi @ 28 days for footings.
7. Reinforcing ; ASTM A615-60
8. Soil ; Assumed minimum allowable bearing value = 1,500 psf @ 12" depth

Index

	Page
1. 6500 gal. and 12500 gal. Flat Bottom Tanks	4-10
2. 7400 gal. Cone Bottom Tank	11-16

Appendix

1. Tank Data and Calculations for Anchorage types
2. Calculations for Capacity of Connectors
3. Anchor Bolts ICBO Report (ESR-2322)

SHT. # 2
J.N. 12-932A
DATE 12/20/12
BY: J.C.

Project Name = All tanks-Equip. Pro-Fernley, NV
Date = Thu Dec 20 08:55:53 PST 2012

Conterminous 48 States
2003 NEHRP Seismic Design Provisions
Zip Code = 89408
Spectral Response Accelerations Ss and S1
Ss and S1 = Mapped Spectral Acceleration Values
Data are based on a 0.01 deg grid spacing

Period (sec)	Centroid Sa (g)	
0.2	1.335	(Ss)
1.0	0.531	(S1)

Period (sec)	Maximum Sa (g)	
0.2	1.509	(Ss)
1.0	0.615	(S1)

Period (sec)	Minimum Sa (g)	
0.2	0.803	(Ss)
1.0	0.298	(S1)

Conterminous 48 States
2003 NEHRP Seismic Design Provisions
Zip Code = 89408
Spectral Response Accelerations SMs and SM1
SMs = Fa x Ss and SM1 = Fv x S1
Site Class D

Period (sec)	Centroid Sa (g)	
0.2	1.335	(SMs, Fa = 1.000)
1.0	0.796	(SM1, Fv = 1.500)

Period (sec)	Maximum Sa (g)	
0.2	1.509	(SMs, Fa = 1.000)

SHT. # 3
J.N. 12-932 A
DATE 12/20/12
BY J.C.

Period (sec)	Minimum Sa (g)	
0.2	0.947	(SMs, Fa = 1.179)
1.0	0.538	(SM1, Fv = 1.803)

Conterminous 48 States
2003 NEHRP Seismic Design Provisions
Zip Code = 89408
Spectral Response Accelerations SDs and SD1
SDs = 2/3 x SMs and SD1 = 2/3 x SM1
Site Class D

Period (sec)	Centroid Sa (g)	
0.2	0.890	(SDs)
1.0	0.531	(SD1)

Period (sec)	Maximum Sa (g)	
0.2	1.006	(SDs)
1.0	0.615	(SD1)

Period (sec)	Minimum Sa (g)	
0.2	0.631	(SDs)

1.0 0.922 (SM1, Fv = 1.500)

Jaik Choi Associates
Structural Engineering
(949)706-7789, Fax;(424)239-2666
email;jcse@msn.com

Snyder Industries

Lincoln, NE

SII Vertical Ground Supported Tanks (flat bottom)

A) Design Lateral Loads Calculations

Per 2006 IBC/2007 CBC Code (ASCE 7-05 Sect 15.7.6)

1) Seismic loads **Seismic Design Category "D"**

Design Seismic Coeff. Zip Code **89408** (Fernley, NV)

Site Class	D	Table 1613.5.2
Input Fa	1.00	Table 1613.5.3(1)
Input Fv	1.50	Table 1613.5.3(2)
Input Ss	**1.34**	Figure 1613.5(1)
Input S1	**0.53**	Figure 1613.5(2)
Input I	1.5	ASCE 7-Table 11.5-1
Input R	3.0	ASCE 7-Table 15.4-1

Hc; Height of tank content
Hr;Height of tank roof
Ht; Height of tank top
Dt; Diameter of tank
We; Empty Weight of tank
Wc; Content Weight in tank
Wt; Total Weight of tank
SG; Specific Gravity
Pw; Wind Load

Critical Tank Data (Part # 5350) **12500** gals.

Max. Hr	15.45 ft.
Max. D	11.83 ft.
We	3100 lbs
Wc	104175 lbs
S.G.	**1.4**

3.68H/D = 4.81 Tanh(3.68H/D)= **1.00** **manually**
Tc=2*phi*(D/3.68g*tanh(3.68H/D))^2 = 1.98 sec.

Sms =Fa*Ss =	1.335			
Sm1 =Fv*S1 =	0.797			
Sds =2*Sms/3=	0.890	= Sai	Sloshing portion	**25** %
Sd1 =2*Sm1/3=	0.531			
Ts =Sd1/Sds=	0.60	sec.		
Sac=1.5Sd1/Tc=	0.40			
Vi =Sai*I*Wi/R=	0.445	Wi	Wi = We+0.75*Wc 112484	lbs.
Vc =Sac*I*Wc/1.5=	0.401	Wc	Wc = .25*Wc/100 36461	lbs.

Seismic Load = (Vi*Wi+Vc*Wc)/(We+Wc*S.G.) = 0.434 W

Design Load Fp (seis.) = 0.434 W per 2009 IBC/2010 CBC Code governs

2) Wind loads 110 mph

Desgin loads = Wind = Qz =.00256KzKztKdV^2I
Qz = **41.52** psf

Design Wind Coeff.

Input	Kz	1.03	Sect.6.5.6.6 Table 6-3
Input	Kzt	1.37	Sect.6.5.7.2 Figure 6.4
Input	Kd	0.95	Sect.6.5.4.4 Table 6-4
Input	I	1.00	ASCE 7-Table 11.5-1

Pw = Qz*Tank Dia.*Ht
Mot = Pw*Ht/2
Up or Down Ld./conn. = Mot/Dt
Uplift/conn.= Up Ld.- .5*We

B) Tank Data and Anchorage types

See Section "D" (the Calculations for the Capacity of Anchorages at Concrete)

Jaik Choi Associates
Structural Engineering
(949)706-7789, Fax;(424)239-2666
email;jcse@msn.com

Snyder Industries

Lincoln, NE

Job No. 12-932A
Date; 12/20/12
By; J. Choi

1) BASE ANCHORAGE

INPUT PARAMETERS — **ANCHORAGE CONN.**

PART NUMBER	TANK SIZE (GAL.)	TANK DIA. (FT.)	Hc (FT.)	Hr (FT.)	Ht (FT.)	We (LBS.)	Wc (LBS.)	Wind Pw (LBS.)	Wind CONN. TYPE	SEIS. (SG=1.4) (LBS.)	SEIS. (SG=1.4) CONN. TYPE
7140--	6500	10.00	11.59	11.85	12.64	1450	54171	5249		77289	4-6D4
5350--	12500	11.83	15.12	15.45	16.45	3100	104175	8081		148945	8-4D4

2) CABLE ANCHORAGE

Safety Factor (S.F.) = 2 / R.F. / A.F. = 2.0

R.F. = 0.75 (Reduction factor due to possible elastic stretch)
A.F. = 1.33 (Adjust factor due to duration of loads)

CABLE SIZE	BREAK STRENGTH	LOOP STRENGTH W/S.F.= 2.0
0.25	6400	6400
0.375	12000	12000
0.5	21600	21600
0.625	33600	33600
0.75	48000	48000

CABLE IS 7 X 19 304 SERIES SS

Mot = Vseis.*Cg
Up or Down Ld./conn. = Mot/Ds
Uplift/conn.= Up Ld.- .5*Wef
Wef = 50% of Wt effect. for holdown

INPUT PARAMETERS — **CABLE CONN.**

PART NUMBER	TANK SIZE (GAL.)	TANK DIA. (FT.)	Hr (FT.)	Wt (LBS.)	No. of Anchor WIND	SG1.5	Sg1.9	WIND UPLIFT (LBS.)	CABLE SIZE	SEIS. (SG=1.4) (LBS.)	SEIS. (SG=1.4) CONN. TYPE
7140--	6500	10.00	11.85	55621	4	4	4	2592	1/4"	-20858	none
5350--	12500	11.83	15.45	107275	4	4	4	4068	1/4"	-40228	none

Jaik Choi Associates
Structural Engineering
(949)706-7789, Fax:(424)239-2666
email; jcse@msn.com

Snyder Industries

Lincoln, NE

C) FOUNDATION DESIGN

SII Vertical Ground Supported Tank (flat bottom)

Desgin loads = Vs = 0.434 W

Design Parameter

Allow. Bearing "Fb"=	1500 psf x 1.33 =	1995 psf
Passive Pressure "Pp"=	250 psf x 1.33 =	332.5 psf
Friction Coeff. = u =	0.3	

Hc; Height of tank content
Ht; Height of tank top
We; Empty Weight of tank
Wc; Content Weight in tank
Wt; Total Weight of tank
Wf; Footing Weight
SG; Specific Gravity
Fd; Footing Diameter
Fe; Footing Edge Distance
Ft; Footing Thickness
Mf; Moment in the footing
Mot; Overturning Moment
Mr; Resisting Moment
F.S.; Factor of Safety for Overturning
SL; Sliding resistance
Fa; Soil bearing value (Direct)
Fb; Soil bearing value (Overturing)
Fs; Soil bearing value (Total)
b; Soil reaction resultant location
Sf; Section Modulus of footing
As; Area of reinforcing steel required

1) Overturning

Mot = Vs*Hc/2
Total Dl.(TD) = W + Wt. Ftg.
Mresist (Mr) = TD*.5*Fw
Factor of Safety "F.S."=Mr/Mot = **> 1.5**

2) Sliding of Foundation

Load = Fp = Vs
Resist = u*Total Dl.+ Passive Pressure
SL > Vs

3) Soil Bearing

Result @ (Mr-Mot)/TD="b"
Fa = (Wt + Wf) / (.785*Fd^2)
Fb = (Wt + Wf)*(.5*Fd-b)/Sf
Fs = (Fa + Fb) psf < 1995 O.K.

Design for Specific gravity (SG) = 1.4

INPUT PARAMETERS **FOUNDATION SIZES**

PART NUMBER	TANK SIZE (GAL.)	TANK DIA. (FT.)	Hc (FT.)	Ht (FT.)	We (LBS.)	Wc (LBS.)	Wt (LBS.)	Fe (FT.)	Fd (FT.)	Ft (FT.)	b (FT.)	Wf (LBS.)
7140--	6500	10.00	11.59	12.64	1450	75839	77289	2.00	14.00	1.00	4.73	23079
5350--	12500	11.83	15.12	16.45	3100	145845	148945	2.75	17.33	1.50	5.76	53046

RESULTS **SOIL BEARING & FOOTING REINFORCING**

PART NUMBER	Vs (LBS.)	SL (LBS.) > Vs	Mot (ft-k)	Mr (ft-k)	F.S. > 1.5	Fa psf	Fb psf	Fs psf	Mf ft.-k	As in2	Reinf. Size	in. o.c.
7140--	33569	31155	228.1	703	3.08	652	847	1499	2.84	0.14	# 4 @	17
5350--	64691	64541	586.1	1750	2.99	857	1147	2004	7.12	0.20	# 4 @	12

Jaik Choi Associates
Structural Engineering
(949)706-7789, Fax:(424)239-2666
email; jcse@msn.com

Snyder Industries

Lincoln, NE

For Part #7140, use 14'-0" dia. x 6" thick house-keeping conc. (4,000) pad on top of existing 6" slab Reinf. w/ #4 @ 12" each way at center-Use Sikadur32 bonding agent between existing and new

For Part #5350, use 17'-4" dia. x 12" thick house-keeping conc. (4,000) pad on top of existing 6" slab Reinf. w/ #4 @ 12" ea. way at 3" from the top-Use Sikadur32 bond'g agent between existing and new

Jaik Choi Associates
Structural Engineering
(949)706-7789, Fax;(424)239-2666
email; jcse@msn.com

Snyder Industries

Lincoln, NE

D) Structural Calculations for the Capacity of Anchorage at Concrete

Seismic V= 0.434 W

1) Unity for Comb. Loading (Shear + Tension)

Bolts= ASTM A 36

Shear/bolt = V/Nb
Tension/bolt = Moment/anc. Spacing = V*Hp/2/Sa
Unity = 1.33 = V/Nb/S + .5*V*Hp/Sa/T/Nb
V = 1.33*Nb*T*S/ (T + .5*S*Hp/Sa) for 1 or 2 bolts
V = 1.33*Nb*T*S/ (T + S*Hp/Sa) for 4 bolts

T= Tension capacity of bolt
S= Shear capacity of bolt
Sa= Anc. spacing or .8*(bolt dist. from edge)
Sb= Anc. spacing btwn stiffners
Hp= Height of back plate
Nb= Number of bolts per conn.

2) Load reduction factors due to anchor bolt spacing

=.7 + .3*(Sa - .5Ed)/Ed

		Bolt Spacing (inches)						
Bolt Size	Ed (Embed.)	1.5 Ed	.5Ed	5	6.5	8	6.5+8	6.5+6.5+8
1/2"	6	9.00	3.00	0.800	0.875	0.950	0.831	0.727
5/8"	7.5	11.25	3.75	0.750	0.810	0.870	0.705	0.571
3/4"	6.75	10.13	3.38	0.772	0.839	0.906	0.760	0.637
1"	9	13.50	4.50	0.717	0.767	0.817	0.626	0.480
1" L	12	18.00	6.00	0.675	0.713	0.750	0.534	0.381

3) Allowable tension and shear values in normal wt. Concrete (ICC #ESR2322))

ASTM A36	2,000 psi conc.				4,000 psi conc.			
	Tension		Shear		Tension		Shear	
Bolt Size	Concrete	Steel	Concrete	Steel	Concrete	Steel	Concrete	Steel
1/2"	4775	3755	6080	1935	5380	3755	8600	1935
5/8"	7320	5870	9505	3025	7515	5870	13440	3025
3/4"	8670	8455	8390	4355	10755	8455	11865	4355
1"	13845	15030	14915	7745	17365	15030	21095	7745
1" L	17935	15030	24325	7745	17935	15030	34405	7745

ASTM A193-B7	2,000 psi conc.				4,000 psi conc.			
	Tension		Shear		Tension		Shear	
Bolt Size	Concrete	Steel	Concrete	Steel	Concrete	Steel	Concrete	Steel
1/2"	4775	8100	6080	4170	5380	8100	8600	4170
5/8"	7320	12655	9505	6520	7515	12655	13440	6520
3/4"	8670	18225	8390	9390	10755	18225	11865	9390
1"	13845	32400	14915	16690	17365	32400	21095	16690
1" L	17935	32400	24325	16690	17935	32400	34405	16690

ASTM 304SS	2,000 psi conc.				4,000 psi conc.			
	Tension		Shear		Tension		Shear	
Bolt Size	Concrete	Steel	Concrete	Steel	Concrete	Steel	Concrete	Steel
1/2"	4775	6480	6080	3335	5380	6480	8600	3335
5/8"	7320	10125	9505	5215	7515	10125	13440	5215
3/4"	8670	12390	8390	6385	10755	12390	11865	6385
1"	13845	22030	14915	11350	17365	22030	21095	11350
1" L	17935	22030	24325	11350	17935	22030	34405	11350

4) Stiffness Plate thickness based on allowable bearing & shear stresses

Allowable bearing stress =Fbrg = 1.2 * Fu = 1.2*58*1.33 = 92.57 ksi

Jaik Choi Associates
Structural Engineering
(949)706-7789, Fax;(424)239-2666
email; jcse@msn.com

Snyder Industries

Lincoln, NE

Allowable shearing stress = Fv = 0.4 * Fy = 0.4*36*1.33 = 19.15 ksi
Edge distance of bolt= 1.75 inches Effect. For shear = 1.75"-1.25"/2 = 1.125 inches

1/4" Plate thick.		
Cable Size	Allow.shear	Allow. Brg.
0.25	10.77	5.79
0.375	10.77	8.68
0.5	10.77	11.57
0.625	10.77	14.46

3/8" Plate thick.		
Cable Size	Allow.shear	Allow. Brg.
0.25	16.16	8.68
0.375	16.16	13.02
0.5	16.16	17.36
0.625	16.16	21.70

5) Maximum plate thickness based on allow. conc. bearing stresses f'c= 2,000 4,000 psi
Allowable concrete bearing stress = .6*fc'*1.33 = Fc= 1600 3200 psi

Conn. Type	2 bolts	4 bolts	6 bolts	Fc (psi)
Max. pl. thk.	0.667	0.514	0.408	for 1600
Max. pl. thk.	0.943	0.727	0.578	for 3200

Base plate length to calculate plate thickness (Pl. thk.)

Conn. Type	2 bolts	4 bolts	6 bolts	
Angle length ("L")	8	10	16	inches
Min. edge dist.	6	8	8	inches

6) Allowable total tank weight (Wt) **=Max. Vs/ 0.434**

For f'c = 2,000 psi Concrete

Conn. Type	# of Anchors	Sa	Hp	Tension (lbs)	Shear (lbs)	Max. Vs (kips)	Tank Wt. (kips)	Pl. thk. (inch)
4-2A	(4) 2- 1/2" dia.	3	3.5	3755	1935	3.96	9.11	0.267
4-2B	(4) 2- 5/8" dia.	3	3.5	5490	3025	6.09	14.02	0.331
4-2C	(4) 2- 3/4" dia.	3	3.5	6695	4355	8.40	19.34	0.389
4-2D	(4) 2- 1" dia.	3	3.5	9922	7745	14.16	32.59	0.505
4-4A	(4) 4- 1/2" dia.	8	4	3755	1935	8.19	18.85	0.106
4-4B	(4) 4- 5/8" dia.	8	4	5158	3025	12.44	28.65	0.131
4-4C	(4) 4- 3/4" dia.	8	6	6586	4355	15.49	35.66	0.179
4-4D	(4) 4- 1" dia.	8	6	8669	7745	24.67	56.80	0.226
4-6A	(4) 6- 1/2" dia.	8	4	3473	1935	12.08	27.81	0.165
4-6B	(4) 6- 5/8" dia.	8	4	4178	3025	17.72	40.81	0.199
4-6C	(4) 6- 3/4" dia.	8	6	5525	4355	21.84	50.29	0.271
4-6D	(4) 6- 1" dia.	8	6	6646	7745	32.98	75.93	0.333
8-4A	(8) 4- 1/2" dia.	8	4	3755	1935	19.76	45.49	0.106
8-4B	(8) 4- 5/8" dia.	8	4	5158	3025	30.04	69.17	0.131
8-4C	(8) 4- 3/4" dia.	8	6	6586	4355	37.39	86.08	0.179
8-4D	(8) 4- 1" dia.	8	6	8669	7745	59.56	137.12	0.226
8-6B	(8) 6- 5/8" dia.	8	4	4178	3025	42.79	98.51	0.199
8-6C	(8) 6- 3/4" dia.	8	6	5525	4355	52.72	121.39	0.271
8-6D	(8) 6- 1" dia.	8	6	6646	7745	79.61	183.30	0.333
8-6E	(8) 6- 1" L.dia.	8	6	6829	7745	80.62	185.62	0.335

For f'c = 4,000 psi Concrete

Conn. Type	# of Anchors	Sa	Hp	Tension	Shear	Max. Vs	Tank Wt.	Pl. thk.

Jaik Choi Associates
Structural Engineering
(949)706-7789, Fax;(424)239-2666
email; jcse@msn.com

Snyder Industries

Lincoln, NE

				(lbs)	(lbs)	(kips)	(kips)	(inch)
4-2A4	(4) 2- 1/2" dia.	3	3.5	3755	1935	3.96	9.11	0.267
4-2B4	(4) 2- 5/8" dia.	3	3.5	5870	3025	6.19	14.24	0.334
4-2C4	(4) 2- 3/4" dia.	3	3.5	8455	4355	8.91	20.51	0.401
4-2D4	(4) 2- 1" dia.	3	3.5	12445	7745	15.11	34.80	0.522
4-4A4	(4) 4- 1/2" dia.	8	4	3755	1935	8.19	18.85	0.106
4-4B4	(4) 4- 5/8" dia.	8	4	5870	3025	12.80	29.46	0.133
4-4C4	(4) 4- 3/4" dia.	8	6	8455	4355	16.71	38.48	0.186
4-4D4	(4) 4- 1" dia.	8	6	10872	7745	26.86	61.83	0.235
4-6A4	(4) 6- 1/2" dia.	8	4	3755	1935	12.28	28.27	0.166
4-6B4	(4) 6- 5/8" dia.	8	4	5870	3025	19.19	44.19	0.207
4-6C4	(4) 6- 3/4" dia.	8	6	8455	4355	25.07	57.72	0.187
4-6D4	(4) 6- 1" dia.	8	6	10872	7745	40.28	92.75	0.368
4-6E4	(4) 6- 1" L.dia.	8	6	9584	7745	38.48	88.60	0.360
8-4A4	(8) 4- 1/2" dia.	8	4	3755	1935	19.76	45.49	0.106
8-4B4	(8) 4- 5/8" dia.	8	4	5870	3025	30.89	71.12	0.133
8-4C4	(8) 4- 3/4" dia.	8	6	8455	4355	40.34	92.89	0.186
8-4D4	(8) 4- 1" dia.	8	6	10872	7745	64.83	149.26	0.235
8-6A4	(8) 6- 1/2" dia.	8	4	3755	1935	29.64	68.24	0.166
8-6B4	(8) 6- 5/8" dia.	8	4	5870	3025	46.33	106.68	0.207
8-6C4	(8) 6- 3/4" dia.	8	6	8455	4355	60.52	139.33	0.290
8-6D4	(8) 6- 1" dia.	8	6	10872	7745	97.24	223.89	0.368
8-6E4	(8) 6- 1" L.dia.	8	6	9584	7745	92.90	213.88	0.360

ASTM A 193- Grade B7 (4,000 psi)

Conn. Type	# of Anchors	Sa	Hp	Tension (lbs)	Shear (lbs)	Max. Vs (kips)	Tank Wt. (kips)	Pl. thk. (inch)
4-6D4(B7)	(4) 6- 1" dia.	8	6	10872	13208	55.15	126.98	0.431
4-6E4(B7)	(4) 6- 1" L.dia.	8	6	9584	13099	51.62	118.85	0.417
8-4A4(B7)	(8) 4- 1/2" dia.	8	4	5380	4170	38.60	89.34	0.148
8-4B4(B7)	(8) 4- 5/8" dia.	8	4	5296	6520	51.83	119.97	0.172
8-4C4(B7)	(8) 4- 3/4" dia.	8	6	8170	9390	64.76	149.92	0.235
8-4D4(B7)	(8) 4- 1" dia.	8	6	10872	13208	88.76	205.45	0.275
8-6A4(B7)	(8) 6- 1/2" dia.	8	4	5380	4170	52.96	122.60	0.342
8-6B4(B7)	(8) 6- 5/8" dia.	8	4	5296	6520	77.74	179.96	0.269
8-6D4(B7)	(8) 6- 1" dia.	8	6	10872	9023	107.13	248.00	0.386
8-6E4(B7)	(8) 6- 1"L.dia.	8	6	9584	13099	124.61	288.44	0.417

AISI 304 SS- Condition CW (4,000 psi)

Conn. Type	# of Anchors	Sa	Hp	Tension (lbs)	Shear (lbs)	Max. Vs (kips)	Tank Wt. (kips)	Pl. thk. (inch)
8-4A4(SS)	(8) 4- 1/2" dia.	8	4	5380	3335	32.70	75.68	0.136
8-4B4(SS)	(8) 4- 5/8" dia.	8	4	5296	5215	44.88	103.88	0.160
8-4C4(SS)	(8) 4- 3/4" dia.	8	6	8170	6385	51.70	119.67	0.210
8-4D4(SS)	(8) 4- 1" dia.	8	6	10872	13208	88.76	205.45	0.275
8-6A4(SS)	(8) 6- 1/2" dia.	8	4	5380	3335	49.04	113.53	0.213
8-6B4(SS)	(8) 6- 5/8" dia.	8	4	5296	5215	67.32	155.82	0.250

Jaik Choi Associates
Structural Engineering
(949)706-7789, Fax;(424)239-2666
email; jcse@msn.com

Snyder Industries

Lincoln, NE

8-6C4(SS)	(8) 6- 3/4" dia.	8	6	8170	6385	77.55	179.51	0.329
8-6D4(SS)	(8) 6- 1" dia.	8	6	10872	10126	114.84	265.84	0.400
8-6E4(SS)	(8) 6- 1" L.dia.	8	6	9584	13099	124.61	288.44	0.417

Jaik Choi Associates
Structural Engineering
(949)706-7789, Fax;(424)239-2666
email;jcse@msn.com

Snyder

Lincoln, NE

Date; 12/20/12
By; J. Choi

Vertical Ground Supported Tanks (Cone bottom)

A) Design Lateral Loads Calculations

Per 2006 IBC/2007 CBC Code

1) Seismic loads **Seismic Design Category "D"**

Design Seismic Coeff. Zip Code **89408** (Fernley, NV)

Site Class	D	Table 1613.5.2
Input Fa	1.00	Table 1613.5.3(1)
Input Fv	1.50	Table 1613.5.3(2)
Input Ss	**1.335**	2003 NEHRP (USGS Web)
Input S1	**0.531**	2003 NEHRP (USGS Web)
Input I	1.5	ASCE 7-Table 11.5-1
Input R	3.0	ASCE 7-Table 15.4-1

Hcb; Height of Cone Bottom
Hct; Height of Cone Top
Ht; Height of tank top
Hcg; Height of center of gravity
Dt; Diameter of tank
We; Empty Weight of tank
Wc; Content Weight in tank
Wt; Total Weight of tank
SG; Specific Gravity
Pw; Wind Load

Critical Tank Data (Part #5320000N) 7400 gals.

Max. Hr	14.79	ft.
Max. D	11.83	ft.
We	1200	lbs
Wc	61672	lbs
S.G.	**1.4**	

3.68H/D = 4.60 Tanh(3.68H/D)= **1.00** **manually**
Tc=2*phi*(D/3.68g*tanh(3.68H/D))^2 = 1.98 sec.

Sms =Fa*Ss =	1.335				
Sm1 =Fv*S1 =	0.797				
Sds =2*Sms/3=	0.890	= Sai	Sloshing	**25** %	
Sd1 =2*Sm1/3=	0.531				
Ts =Sd1/Sds=	0.60	sec.			
Sac=1.5Sd1/Tc=	0.40				
Vi =Sai*I*Wi/R=	0.445	Wi	Wi = We+0.75*Wc	65955	lbs.
Vc =Sac*I*Wc/1.5=	0.401	Wc	Wc = .25*Wc/100	21585	lbs.

Seismic Load = (Vi*Wi+Vc*Wc)/(We+Wc*S.G.) = 0.434 W

Design Load Fp (seis.) = 0.434 W per 2009 IBC/2010 CBC Code governs

2) Wind loads 110 mph

Desgin loads = Wind = Qz =.00256KzKztKdV^2I
Qz = 31.27 psf

Design Wind Coeff.

Input	Kz	0.85	Sect.6.5.6.6 Table 6-3
Input	Kzt	1.00	Sect.6.5.7.2 Figure 6.4
Input	Kd	0.95	Sect.6.5.4.4 Table 6-4
Input	I	1.25	ASCE 7-Table 11.5-1

Pw = Ww*Tank Dia.*Ht
Mot = Pw*Ht/2
Up or Down Ld./conn. = Mot/Dt
Uplift/conn.= Up Ld.- .5*We

B) Tank Data and Anchorage types

See Section "D" (the Calculations for the Capacity of Anchorages at Concrete)

Jaik Choi Associates
Structural Engineering
(949)706-7789, Fax;(424)239-2666
email;jcse@msn.com

Snyder

Lincoln, NE

1) BASE ANCHORAGE

INPUT PARAMETERS — **ANCHORAGE CONN.**

PART NUMBER	TANK SIZE (GAL.)	TANK DIA. (FT.)	Hcb (FT.)	Hct (FT.)	Ht (FT.)	We (LBS.)	Wc (LBS.)	Wind Pw (LBS.)	Wind CONN. TYPE	SEIS. (SG=1.4) (LBS.)	SEIS. CONN. TYPE
5320000N	7400	11.83	2.00	5.25	13.36	1200	86340	4942		38014	8-3/4" dia.

8 -3/4" dia. Hilti HVA good for 8*4,355*1.33 = 46,337 # > 38014 O.K.

2) CABLE ANCHORAGE

Safety Factor (S.F.) = 2 / R.F./ A.F. = 2.0

R.F. = 0.75 (Reduction factor due to possible elastic stretch)
A.F. = 1.33 (Adjust factor due to duration of loads)

CABLE SIZE	BREAK STRENGTH	LOOP STRENGTH W/S.F.= 2.0
0.25	6400	6400
0.375	12000	12000
0.5	21600	21600
0.625	33600	33600
0.75	48000	48000

CABLE IS 7 X 19 304 SERIES SS

Mot = Vseis.*Cg
Up or Down Ld./conn. = Mot/Ds
Uplift/conn.= Up Ld.- .5*Wef
Wef = 50% of Wt effect. for holdown

INPUT PARAMETERS — **CABLE CONN.**

PART NUMBER	TANK SIZE (GAL.)	TANK DIA. (FT.)	Hcg (FT.)	Wt (LBS.)	No. of Anchor WIND	SG1.2	Sg1.4	WIND UPLIFT (LBS.)	WIND CABLE SIZE	SEIS. (SG=1.4) (LBS.)	SEIS. CONN. TYPE
5320000N	7400	11.83	9.06	87540	4	4	4	-600	none	-26045	none

No Uplift

Jaik Choi Associates
Structural Engineering
(949)706-7789, Fax:(424)239-2666
email; jcse@msn.com

Snyder

Lincoln, NE

Structural Calculations for the footing supporting tank

C) FOUNDATION DESIGN

Vertical Ground Supported Tank (Cone bottom)

Desgin loads = Vs = 0.434 W

Hc; Height of tank content
Ht; Height of tank top
We; Empty Weight of tank
Wc; Content Weight in tank
Wt; Total Weight of tank
Wf; Footing Weight
SG; Specific Gravity
Fd; Footing Diameter
Fe; Footing Edge Distance
Ft; Footing Thickness
Mf; Moment in the footing
Mot; Overturning Moment
Mr; Resisting Moment
F.S.; Factor of Safety for Overturning
SL; Sliding resistance
Fa; Soil bearing value (Direct)
Fb; Soil bearing value (Overturing)
Fs; Soil bearing value (Total)
b; Soil reaction resultant location
Sf; Section Modulus of footing
As; Area of reinforcing steel required

Design Parameter

Allow. Bearing "Fb"=	1500 psf x 1.33 =	1995 psf
Passive Pressure "Pp"=	250 psf x 1.33 =	332.5 psf
Friction Coeff. = u =	0.4	

1) Overturning

Mot = Vs*Hc/2
Total Dl.(TD) = W + Wt. Ftg.
Mresist (Mr) = TD*.5*Fw
Factor of Safety "F.S."=Mr/Mot = **> 1.5**

2) Sliding of Foundation

Load = Fp = Vs
Resist = u*Total Dl.+ Passive Pressure
SL > Vs

3) Soil Bearing

Result @ (Mr-Mot)/TD="b"
Fa = (Wt + Wf) / (.785*Fd^2)
Fb = (Wt + Wf)*(.5*Fd-b)/Sf
Fs = (Fa + Fb) psf < 1995 O.K.

Design for Specific gravity (SG) = 1.4

Footing width = 14.50 ft.
Saddle dist. = 8.30 ft.

INPUT PARAMETERS / **FOUNDATION SIZES**

PART NUMBER	TANK SIZE (GAL.)	TANK DIA. (FT.)	Hcg (FT.)	Ht (FT.)	We (LBS.)	Wc (LBS.)	Wt (LBS.)	Fe (FT.)	Fd (FT.)	Ft (FT.)	b (FT.)	Wf (LBS.)
5320000N	7400	11.83	9.06	13.36	1200	86340	87540	1.33	14.49	1.00	3.84	24723

RESULTS / **SOIL BEARING & FOOTING REINFORCING**

PART NUMBER	Vs (LBS.)	SL (LBS.) > Vs	Mot (ft-k)	Mr (ft-k)	F.S. > 1.5	Fa psf	Fb psf	Fs psf	Mf ft.-k	As in2	Reinf. Size	in. o.c.
5320000N	38014	45987	382.4	813	2.13	681	1280	1962	3.59	0.19	# 4 @	13

Jaik Choi Associates
Structural Engineering
(949)706-7789, Fax:(424)239-2666
email; jcse@msn.com

Snyder

Lincoln, NE

Sheet No. 14 of
Job No. 12-932A
Date; 12/20/12
By; J. Choi

For Part #5320000N, use 14'-6" dia. x 6" thick house-keeping conc. (4,000) pad on top of existing 6" slab Reinf. w/ #4 @ 12" each way at center-Use Sikadur32 bonding agent between existing and new

Jaik Choi Associates
Structural Engineering
(949)706-7789, Fax;(424)239-2666
email; jcse@msn.com

Snyder

Lincoln, NE

D) Structural Calculations for the Capacity of Anchorage at Concrete

Seismic V= 0.434 W

1) Unity for Comb. Loading (Shear + Tension)

Bolts= ASTM A 36

Shear/bolt = V/Nb
Tension/bolt = Moment/anc. Spacing = V*Hp/2/Sa
Unity = 1.33 = V/Nb/S + .5*V*Hp/Sa/T/Nb
V = 1.33*Nb*T*S/ (T + .5*S*Hp/Sa) for 1 or 2 bolts
V = 1.33*Nb*T*S/ (T + S*Hp/Sa) for 4 bolts

T= Tension capacity of bolt
S= Shear capacity of bolt
Sa= Anc. spacing or .8*(bolt dist. from edge)
Sb= Anc. spacing btwn stiffners
Hp= Height of back plate
Nb= Number of bolts per conn.

2) Load reduction factors due to anchor bolt spacing

=.7 + .3*(Sa - .5Ed)/Ed

		Bolt Spacing (inches)						
Bolt Size	Ed (Embed.)	1.5 Ed	.5Ed	5	6.5	8	6.5+8	6.5+6.5+8
1/2"	6	9.00	3.00	0.800	0.875	0.950	0.831	0.727
5/8"	7.5	11.25	3.75	0.750	0.810	0.870	0.705	0.571
3/4"	6.75	10.13	3.38	0.772	0.839	0.906	0.760	0.637
1"	9	13.50	4.50	0.717	0.767	0.817	0.626	0.480
1" L	12	18.00	6.00	0.675	0.713	0.750	0.534	0.381

3) Allowable tension and shear values in normal wt. Concrete (ICC #ESR2322)

ASTM A36	2,000 psi conc.				4,000 psi conc.			
	Tension		Shear		Tension		Shear	
Bolt Size	Concrete	Steel	Concrete	Steel	Concrete	Steel	Concrete	Steel
1/2"	4775	3755	6080	1935	5380	3755	8600	1935
5/8"	7320	5870	9505	3025	7515	5870	13440	3025
3/4"	8670	8455	8390	4355	10755	8455	11865	4355
1"	13845	15030	14915	7745	17365	15030	21095	7745
1" L	17935	15030	24325	7745	17935	15030	34405	7745

ASTM A193-B7	2,000 psi conc.				4,000 psi conc.			
	Tension		Shear		Tension		Shear	
Bolt Size	Concrete	Steel	Concrete	Steel	Concrete	Steel	Concrete	Steel
1/2"	4775	8100	6080	4170	5380	8100	8600	4170
5/8"	7320	12655	9505	6520	7515	12655	13440	6520
3/4"	8670	18225	8390	9390	10755	18225	11865	9390
1"	13845	32400	14915	16690	17365	32400	21095	16690
1" L	17935	32400	24325	16690	17935	32400	34405	16690

ASTM 304SS	2,000 psi conc.				4,000 psi conc.			
	Tension		Shear		Tension		Shear	
Bolt Size	Concrete	Steel	Concrete	Steel	Concrete	Steel	Concrete	Steel
1/2"	4775	6480	6080	3335	5380	6480	8600	3335
5/8"	7320	10125	9505	5215	7515	10125	13440	5215
3/4"	8670	12390	8390	6385	10755	12390	11865	6385
1"	13845	22030	14915	11350	17365	22030	21095	11350
1" L	17935	22030	24325	11350	17935	22030	34405	11350

4) Stiffness Plate thickness based on allowable bearing & shear stresses

Allowable bearing stress =Fbrg = 1.2 * Fu = 1.2*58*1.33 = 92.57 ksi

Jaik Choi Associates
Structural Engineering
(949)706-7789, Fax;(424)239-2666
email; jcse@msn.com

Snyder

Lincoln, NE

Job No. 12-932A
Date; 12/20/12
By J. Choi

Allowable shearing stress = Fv = 0.4 * Fy = 0.4*36*1.33 = 19.15 ksi
Edge distance of bolt= 1.75 inches Effect. For shear = 1.75"-1.25"/2 = 1.125 inches

JAIK CHOI & ASSOCIATES
STRUCTURAL ENGINEERING
23177 LA CADENA DRIVE. #101
LAGUNA HILLS. CALIFORNIA 92653
(949) 951-2522

ALL TANKS

SHEET NO. 17 OF
JOB. NO. 12-932
DATE 1/4/13
BY J.C.

STRUCTURAL CALCULATIONS FOR HOR. SHEAR CONN. BTWN EXIST'G & NEW CONC.

1.

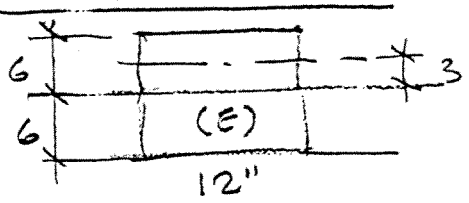

$I = 12 \times 12^3/12 = 1728$

$Q = 12 \times 6 \times 3 = 216$

$\frac{Q}{I} = .125$

2.

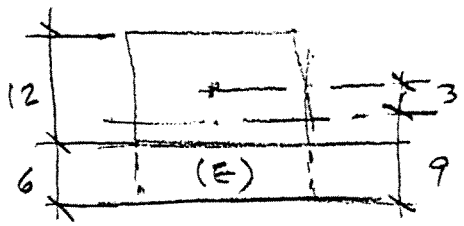

$I = 12 \times 18^3/12 = 5832$

$Q = 12 \times 12 \times 3 = 432$

$\frac{Q}{I} = .074$

3.

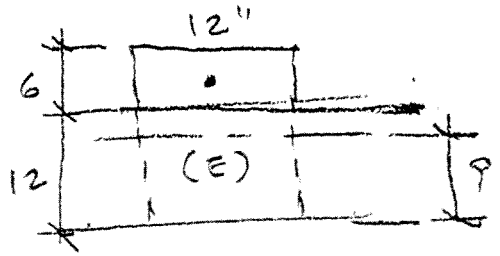

$I = 5832$

$Q = 12 \times 6 \times 6 = 432$

$\frac{Q}{I} = .074$

$\frac{VQ}{I} = .125\,V$

FOOTING DIA. = 17.33'

$A_{FTG.} = \pi \times 17.33^2/4 = 235.76$

$W_t = 148945 + 53046 = 202^K$

UNIF. $W_t = 202/235.76 = .857\ ^K/_{0'}$

LOC. OF ZERO SHEAR = $.857/.116 = 7.4'$

TOTAL $V = 1.143 \times 9.9/2 = 5.66^K$

$\frac{VQ}{I} = .125 \times 5.66 = .707\ ^K/_{ft}$

USING HILTI HIT RE 500
5/8" Φ W/ 2 3/8" EMBED. (GOOD FOR 5245#)
SPACING REQ'D $5.245/.707 = 7.42'$
USE 1'-0" O/C

CRIT. TANK = 12500 GAL.

$A = \frac{\pi \times 11.83^2}{4} = 110\ \square'$

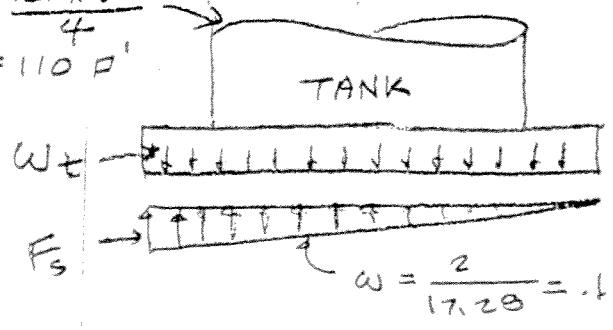

PRESSURE DIAG.

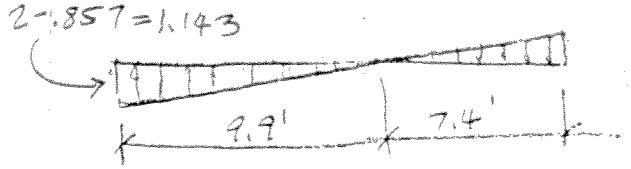

SHEAR DIAG.

HIT-RE 500 Epoxy Adhesive Anchoring System 4.2.7

HIT-RE 500 Allowable and Ultimate Bond/Concrete Capacity for HAS Rods in Normal Weight Concrete[1,2,3,4]

Anchor Diameter in (mm)	Embedment Depth in (mm)	HIT-RE 500 Allowable Bond/Concrete Capacity				HIT-RE 500 Ultimate Bond/Concrete Capacity			
		Tensile		Shear		Tensile		Shear	
		f'_c = 2000 psi (13.8 MPa) lb (kN)	f'_c = 4000 psi (27.6 MPa) lb (kN)	f'_c = 2000 psi (13.8 MPa) lb (kN)	f'_c = 4000 psi (27.6 MPa) lb (kN)	f'_c = 2000 psi (13.8 MPa) lb (kN)	f'_c = 4000 psi (27.6 MPa) lb (kN)	f'_c = 2000 psi (13.8 MPa) lb (kN)	f'_c = 4000 psi (27.6 MPa) lb (kN)
3/8 (9.5)	1-3/4 (44)	645 (2.9)	1095 (4.9)	1510 (6.7)	2135 (9.5)	2580 (11.5)	4370 (19.4)	4530 (20.2)	6405 (28.4)
	3-3/8 (86)	2190 (9.7)	2585 (11.5)	3155 (14.0)	4460 (19.8)	8760 (39.0)	10345 (46.0)	9460 (42.1)	13380 (59.5)
	4-1/2 (114)	2420 (10.8)	2585 (11.5)	4855 (21.6)	6860 (30.5)	9685 (43.1)	10335 (46.0)	14560 (64.8)	20580 (91.5)
1/2 (12.7)	2-1/4 (57)	1130 (5.0)	1965 (8.7)	2510 (11.2)	3550 (15.8)	4530 (20.2)	7860 (35.0)	7525 (33.4)	10640 (47.3)
	4-1/2 (114)	4045 (18.0)	5275 (23.5)	5610 (25.0)	7935 (35.3)	16185 (72.0)	21095 (93.8)	16820 (74.8)	23800 (105.9)
	6 (152)	4775 (21.2)	5380 (23.9)	8635 (38.4)	12210 (54.3)	19095 (84.9)	21520 (95.7)	25900 (115.2)	36620 (162.9)
5/8 (15.9)	2-7/8 (73)	1690 (7.5)	3045 (13.5)	5245 (23.3)	7420 (33.0)	6770 (30.1)	12175 (54.2)	15735 (70.0)	22250 (99.0)
	5-5/8 (143)	6560 (29.2)	7355 (32.7)	8760 (39.0)	12395 (55.1)	26240 (116.7)	29420 (130.9)	26280 (116.9)	37180 (165.4)
	7-1/2 (190)	7320 (32.6)	7515 (33.4)	13615 (60.6)	19080 (84.9)	29290 (130.3)	30060 (133.7)	40840 (180.1)	57240 (254.6)
3/4 (19.1)	3-3/8 (86)	2310 (10.3)	4515 (20.1)	7335 (32.6)	10370 (46.1)	9250 (41.1)	18065 (80.4)	22000 (97.9)	31108 (138.4)
	6-3/4 (172)	8670 (38.6)	10755 (47.8)	12615 (56.1)	17840 (79.4)	34685 (154.3)	43020 (191.4)	37840 (168.3)	53520 (238.1)
	9 (229)	10385 (46.2)	12995 (57.8)	19430 (86.4)	27470 (122.2)	41535 (184.8)	51985 (231.3)	58280 (259.2)	82400 (366.5)
7/8 (22.2)	4 (101)	3005 (13.4)	5665 (25.2)	7795 (34.7)	11020 (49.0)	12030 (53.5)	22670 (100.8)	23375 (104.0)	33050 (147.0)
	7-7/8 (200)	12495 (55.6)	15875 (70.6)	17175 (76.4)	24290 (108.0)	49975 (222.3)	63495 (282.5)	51520 (229.2)	72860 (324.1)
	10-1/2 (267)	14705 (65.4)	16185 (72.0)	26440 (117.6)	37390 (166.3)	58820 (261.7)	64730 (287.9)	79320 (352.8)	112160 (498.9)
1 (25.4)	4-1/2 (114)	3945 (17.5)	8440 (37.5)	10035 (44.6)	14190 (63.1)	15790 (70.2)	33765 (150.2)	30104 (133.9)	42565 (189.4)
	9 (229)	13845 (61.6)	17365 (77.2)	22435 (99.8)	31720 (141.1)	55380 (246.4)	69465 (309.0)	67300 (299.4)	95160 (423.3)
	12 (305)	17935 (79.8)	17935 (79.8)	34535 (153.6)	48830 (217.2)	71740 (319.1)	71740 (319.1)	103600 (460.8)	146480 (651.6)
1-1/4 (31.8)	5-5/8 (143)	5760 (25.6)	12815 (57.0)	14760 (65.7)	20870 (92.8)	23045 (102.5)	51270 (228.1)	44280 (196.9)	62610 (278.5)
	11-1/4 (286)	24610 (109.5)	31620 (140.7)	35050 (155.9)	49570 (220.5)	98430 (437.9)	126480 (562.6)	105140 (467.7)	148710 (661.4)
	15 (381)	34130 (151.8)	35270 (156.9)	53960 (240.0)	76300 (339.4)	136525 (607.3)	141090 (627.6)	161880 (720.1)	228900 (1018.2)

1 Influence factors for spacing and/or edge distance are applied to concrete/bond values above, and then compared to the steel value. The lesser of the values is to be used for the design.

2 Average ultimate concrete shear capacity based on Concrete Capacity Design (CCD) method for standard and deep embedment and based on testing for shallow embedment.

3 All values based on holes drilled with carbide bit and cleaned with brush per manufacturer's instructions. Ultimate tensile concrete/bond loads represent the average values obtained in testing.

4 For underwater applications up to 165 feet/50m depth reduce the tabulated concrete/bond values 30% to account for reduced mechanical properties of saturated concrete

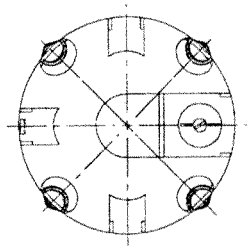

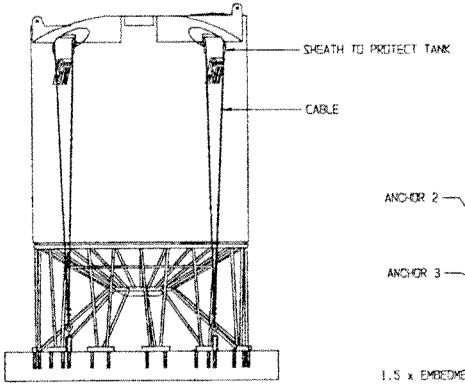

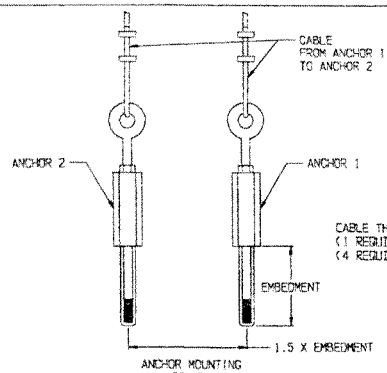

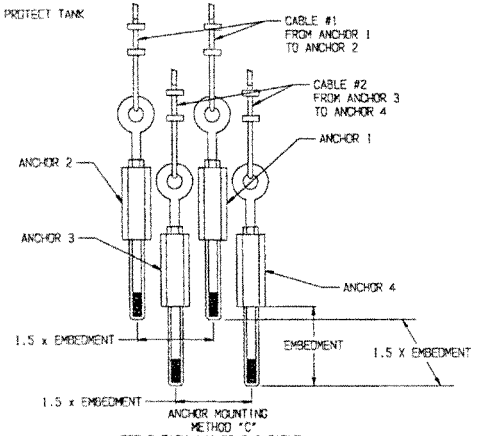

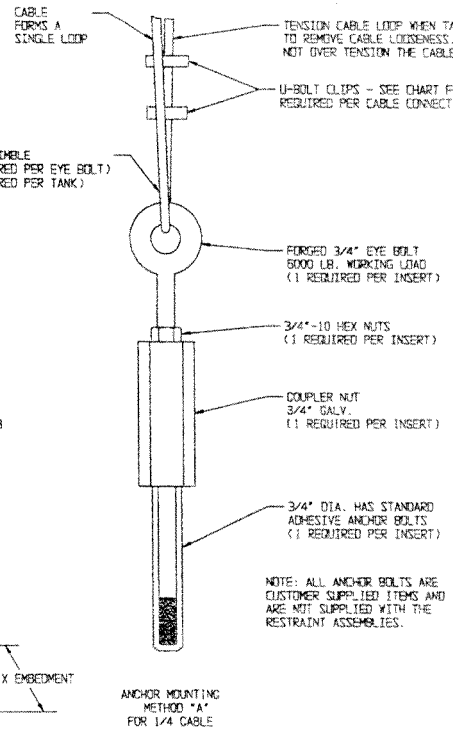

TABLE 1

CABLE SIZE (INCHES)	THIMBLE SIZE (INCHES)	MINIMUM # OF CLIPS REQ'D	AMOUNT OF ROPE TURNBACK (+ INCHES)	*TORQUE IN FT. LBS.
1/4	1/4	2	4-3/4	12
3/8	3/8	2	6-1/2	45
1/2	1/2	3	11-1/2	65
5/8	5/8	3	12	95
3/4	3/4	4	15	130

* THE TORQUEING TORQUE VALUES SHOWN ARE BASED UPON THE THREADS BEING CLEAN, DRY, AND FREE OF CONTAMINANTS.

CODES:
CBC 2007, IBC 2006, API 650, ASCE 7.05, AND AISC 13TH EDITION

SEISMIC DESIGN:
Zip Code = 92701, Site class D - Fa=1.0, Fv=1.5,
Sds = 1.105, Sd1 = 0.597, I = 1.5, R = 3.0
Fp=((Sds X I x W)/R) X 0.7 X 0.8 = 0.31 W

WIND DESIGN:
IBC/CBC = 150 MPH
Qz = 0.00256KzKztKdV^2I = 58.14 PSF
(Kz = 0.85, Kzt = 1.0, Kd = 0.95, I = 1.25)

GENERAL:
1. ALL CONSTRUCTION MUST MEET LOCAL BUILDING CODE REQUIREMENTS AND BE APPROVED BY THE CONSTRUCTION SITE ENGINEER.
2. THESE GUIDELINES HAVE BEEN PROVIDED TO SPECIFY THE RESTRAINT RECOMMENDATIONS FOR SNYDER INDUSTRY CONE BOTTOM BULK STORAGE TANKS.

CONCRETE MATERIAL:
1. CONCRETE SHALL ATTAIN A MINIMUM ULTIMATE 28 DAY COMPRESSIVE STRENGTH OF Fc=3000 PSI.

CONCRETE REINFORCEMENT:
1. REINFORCING STEEL SHALL CONFORM TO THE REQUIREMENTS OF ASTM A615 GRADE 40 (Fy 40,000 PSI.) AND/OR WELDED WIRE FABRIC PER ASTM A185.
2. LAP ALL BARS A MINIMUM OF 40 BAR DIAMETERS. LAP WIRE FABRIC 6" MINIMUM.
3. MINIMUM COVER FOR REINFORCING BARS SHALL BE AS FOLLOWS:
   - 3" FOR CONCRETE DEPOSITED DIRECTLY AGAINST EARTH.
   - 2" FOR CONCRETE DEPOSITED IN FORMS.
4. CONCRETE PAD DESIGN SHOULD BE COMPLETED BY THE CONSTRUCTION SITE ENGINEER BASED ON SPECIFIC APPLICATION.

STRUCTURAL STEEL:
1. ALL STRUCTURAL STEEL COMPONENTS SHALL BE NEW AND OF BASIC OPEN HEARTH KNOWLESS STEEL CONFORMING TO ALL APPLICABLE REQUIREMENTS OF ASTM A500, A513, ANSI 1020, AND ANSI 1026 (DEPENDS ON STRUCTURAL SHAPE)
2. ALL ARC WELDING ELECTRODES SHALL CONFORM TO ASTM A233 FOR STEEL ARC WELDING ELECTRODES. ELECTRODES SHALL BE AS RECOMMENDED BY THE MANUFACTURES FOR THE POSITIONS AND OTHER CONDITIONS OF ACTUAL USE. WELDING SHALL CONFORM TO REQUIREMENTS OF AMERICAN WELDING SOCIETY AWS D1.21.
3. ALL SHARP EDGES AND CORNERS SHALL BE REMOVED ON ALL STRUCTURAL STEEL COMPONENTS.
4. CABLES TO BE 7X19 STRANDED CORE CONSTRUCTION SIZED PER CHART. MATERIAL TO BE SPECIFIED BY CUSTOMER ORDER (MINIMUM BREAKING STRENGTH EQUAL TO OR GREATER THAN 304 SS RATING).
5. ANCHOR BOLTS TO BE HILTI ADHESIVE ANCHORS, MODEL HVA WITH SIZE AND MATERIAL AS SPECIFIED PER SPECIFICATION CHART. ALL 1 1/2" DIA. HVA ANCHORS TO HAVE 4-1/4" EMBEDMENT. ALL 3/4" DIA. HVA ANCHORS TO HAVE 6-5/8" EMBEDMENT. ALL 1" DIA. HVA ANCHORS TO HAVE 8-1/4" EMBEDMENT. EMBEDMENT MUST BE PER MANUFACTURER'S RECOMMENDATION. NO ALLOWANCE HAS BEEN MADE FOR LESS THAN FULL EMBEDMENT. ALL OTHER FASTENER MATERIALS MUST CORRESPOND TO THE TYPE OF ANCHOR SELECTED.

TANK SIZE (GALLONS)	TANK DIAMETER (INCHES)	1.9 SPECIFIC GRAVITY FLUID STAND REQUIRED	STAND ANCHOR BOLTS REQUIRED	CABLE SIZE	CABLE METHOD	TOTAL # TIE DOWN ANCHOR BOLTS	TOTAL # TIE DOWN CABLES
500	64	78800000	8 EA. 1/2" DIA. HAS STANDARD	1/4	A	4	4
500	86	79000000	8 EA. 1/2" DIA. HAS STANDARD	1/4	A	4	4
1000	64	78800000	8 EA. 1/2" DIA. HAS STANDARD	1/4	A	4	4
1000	86	79000000	8 EA. 1/2" DIA. HAS STANDARD	1/4	A	4	4
1400	86	78900000	8 EA. 1/2" DIA. HAS STANDARD	1/4	A	4	4
1500 1.6 SG	64	78800000	8 EA. 1/2" DIA. HAS STANDARD	1/4	A	4	4
1500 1.9 SG	64	78800100	8 EA. 1/2" DIA. HAS STANDARD	1/4	A	4	4
1650	86	78900000	8 EA. 1/2" DIA. HAS STANDARD	1/4	A	4	4
2000	90	79300000	24 EA. 3/4" DIA. HAS STANDARD	1/4	A	4	4
2500	90	79300000	24 EA. 3/4" DIA. HAS STANDARD	1/4	A	4	4

TANK SIZE (GALLONS)	TANK DIAMETER (INCHES)	1.9 SPECIFIC GRAVITY FLUID STAND REQUIRED	STAND ANCHOR BOLTS REQUIRED	CABLE SIZE	CABLE METHOD	TOTAL # TIE DOWN ANCHOR BOLTS	TOTAL # TIE DOWN CABLES
2600	90	79400000	24 EA. 3/4" DIA. HAS STANDARD	1/4	A	4	4
3000	90	79300000	24 EA. 3/4" DIA. HAS STANDARD	1/4	A	4	4
3900	90	79800000	24 EA. 3/4" DIA. HAS STANDARD	1/4	C	16	8
4100	90	79900000	24 EA. 3/4" DIA. HAS STANDARD	3/8	C	16	8
4400	90	79800000	24 EA. 3/4" DIA. HAS STANDARD	3/8	C	16	8
6000	142	79500000	24 EA. 3/4" DIA. HAS STANDARD	1/4	A	4	4
7400	142	79500000	24 EA. 3/4" DIA. HAS STANDARD	1/4	A	4	4
11500	142	79500100	24 EA. 1" DIA. HAS STANDARD	1/4	A	4	4
13000	142	79500100	24 EA. 1" DIA. HAS STANDARD	3/8	C	16	8

SNYDER INDUSTRIES INC.
LINCOLN, NE 68504

SCALE: NONE	APPROVED BY: D.A.D.	DRAWN BY M. Faben
DATE: 12/07/93		REVISED: 11/20/08

S.I.I. CONE BOTTOM TANK RESTRAINT RECOMMENDATIONS

DRAWING NO. B-3182C, PAGE 1 OF 1

2/12/13
REGISTERED PROFESSIONAL ENGINEER-STATE OF NEBRASKA
JAIK
DAO
CIVIL
No. 7784

NOTES:

1. REFER TO CALCULATION PACKAGE FOR ADDITIONAL INFORMATION. PAD DIAMETER (Fd) AND PAD THICKNESS (Ft) PER CALCULATION PACKAGE.
2. ALL CONSTRUCTION TECHNIQUES SHALL CONFORM TO ASCE-7.05, IBC 2009.
3. CONCRETE SHALL OBTAIN A MINIMUM ULTIMATE 28 DAY COMPRESSIVE STRENGTH OF Fc = 4000 PSI OR 2000 PSI U.N.O. (SEE CHART BELOW).
4. REINFORCING STEEL SHALL CONFORM TO THE REQUIREMENTS OF ASTM A615 GRADE 60, Fy = 60,000 PSI.
5. MINIMUM COVER FOR REINFORCING BARS SHALL BE 2" ON THE TOP, 3" ON THE SIDES AND BOTTOM OF THE PAD AS SHOWN.
6. PAD IS ASSUMED TO BE PLACED ON A COMPACTED LEVEL SURFACE WITH AN ALLOWABLE SOIL BEARING VALUE OF 1500 PSF. THIS IS THE MAXIMUM ASSUMED SOIL BEARING ALLOWED WITHOUT SITE INSPECTION. IF SITE INSPECTION IS AVAILABLE, PAD DIMENSIONS COULD BE DECREASED. PLEASE CONSULT WITH LOCAL CIVIL ENGINEER FOR REVIEW.
7. ANY PAD SHAPE BUILT (SQUARE OR HEXAGON) THAT WOULD ENCOMPASS THIS ROUND PAD DESIGN AND BUILT USING THE SAME THICKNESS, REINFORCEMENT CRITERIA (ADJUSTED FOR SHAPE AND SIZE), AND DESIGN SPECIFICATIONS WOULD BE CONSIDERED ACCEPTABLE UNDER THESE CALCULATIONS AND CRITERIA.

PART No.	TANK SZ.	TANK Ø	SG	Hc	Ht	Fd	Ft	REBAR SZ.	SPACING O.C.	CONCRETE PSI
7140--	6500	10.00	1.4	11.59	12.64	14.00	1.00	#4	16"	4000
9350--	12500	11.83	1.4	15.12	16.45	17.33	1.50	#4	12"	4000

Hc = HEIGHT OF TANK CONTENTS
Ht = HEIGHT OF TANK TOP
Fd = FOOTING (PAD) DIAMETER
Ft = TOTAL FOOTING (PAD) THICKNESS

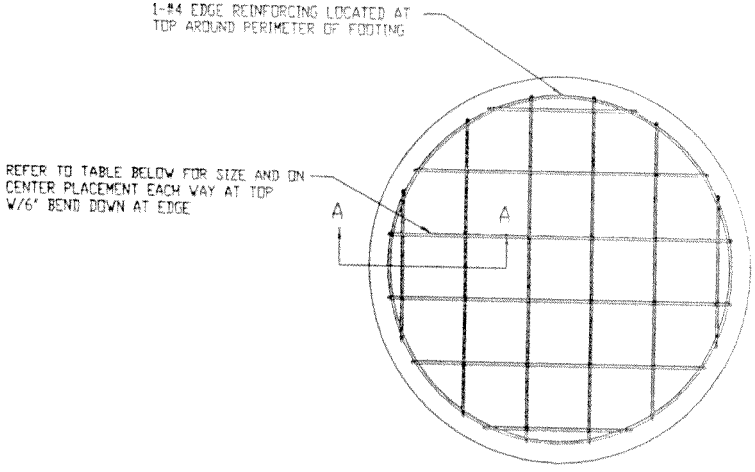

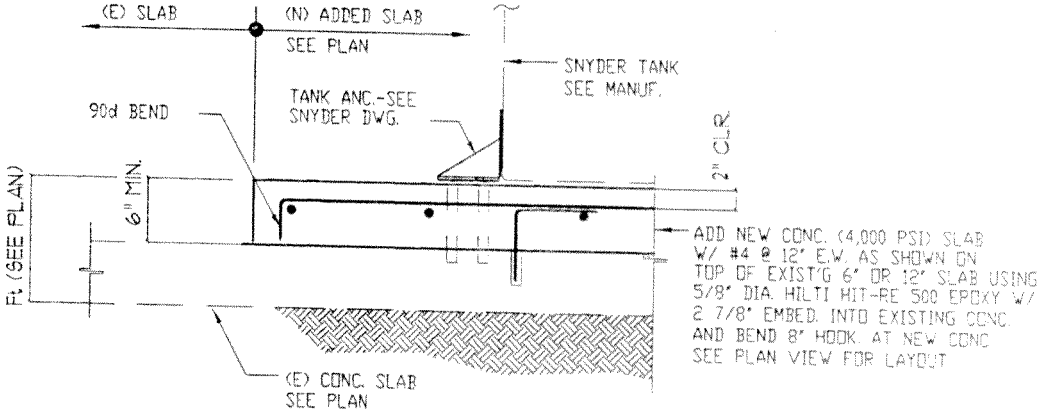

SECTION VIEW A-A

2/12/13

REGISTERED PROFESSIONAL ENGINEER - STATE OF NEBRASKA
JAIK CHOI
No. 7783
CIVIL
EXP. 12/31/13

SNYDER INDUSTRIES INC.
LINCOLN, NE 68504 PHONE:(402) 467-5221 FAX:(402) 467-3247

SCALE: NTS	APPROVED BY:	DRAWN BY: J.D.
DATE: 08/31/04		REVISED

SEISMIC CABLE RESTRAINT SYSTEM 4000 PSI FOUNDATION DESIGN FOR 6,500 & 12,500 GALLON TANKS

TOLERANCES UNLESS OTHERWISE SPECIFIED:
FRACTIONAL: ±1/32"; ANGULAR: ±1°
DECIMAL: .X = ±0.100", .XX = ±0.060"; .XXX = ±0.003"

DRAWING NUMBER
B-2509

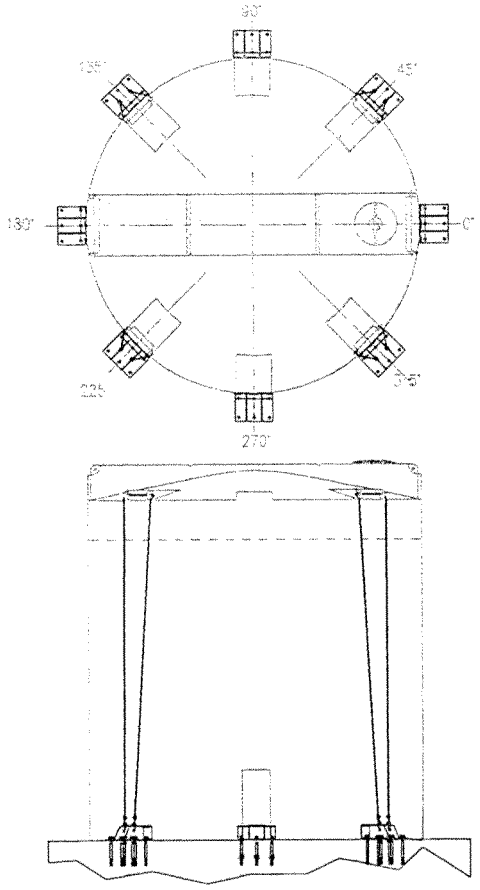

TABLE 1				
CLIP SIZE (INCHES)	ROPE SIZE (INCHES)	MINIMUM # CLIPS REQ.	AMOUNT OF ROPE TURN-BACK (INCHES)	*TORQUE IN Ft. Lbs
1/4	1/4	2	4-3/4	15
3/8	3/8	2	6-1/2	45
1/2	1/2	3	11-1/2	65
5/8	5/8	3	12	95

* THE TIGHTENING TORQUE VALUES SHOWN ARE BASED UPON THE THREADS BEING CLEAN, DRY, AND FREE OF LUBRICATION.)

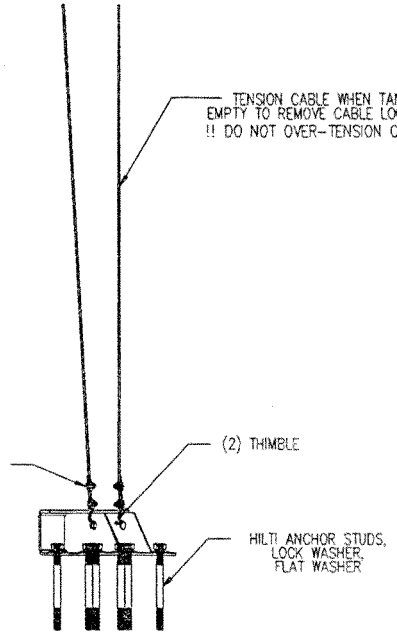

1.4 SPECIFIC GRAVITY								
TANK GAL.	TANK DIA.	ANCHOR	QTY.	ANCHOR BOLT	QTY.	EMBEDMENT	CABLE	FOUNDATION
6500	120"	B-2469	4	1" HILTI HAS STD.	24	9"	1/4"	B-2509
12500	142"	B-2467	8	1" HILTI SUPER HAS (ASTM 193A)	32	9"	1/4"	B-2509

2/12/13

REGISTERED PROFESSIONAL ENGINEER-STATE OF NEBRASKA
JAIK CHOI
CIVIL
EXP. 12/31/14

REVISIONS			
#	DESCRIPTION	DATE	BY
A	PICTORIALLY UPDATE ANCHOR	01/07/13	J.D.

CODES:

CODES:
IBC2006
CBC2007
ASCE 7.05
AISC 13th EDITION
ACI 318-02
SEISMIC DESIGN:
IBC SEISMIC DESIGN CATAGORY "D" (GOVERNING CODES)
Fp=(Vi Wi+Vc Wc)/(We+Wc*SG)= .434W
(Ss=1.34, S1 =.53, R=3.0, I=1.5)
WIND DESIGN:
IBC - 110 MPH
Qz=.00256KzKztKdV^2I=31.27PSF
(Kz=.85, Kzt=1.0, Kd=.95,I=1.25)

GENERAL:
1. ALL CONSTRUCTION SHALL MEET LOCAL BUILDING CODE REQUIREMENTS AND BE APPROVED BY THE BUILDING OFFICIAL.
2. THESE GUIDELINES HAVE BEEN PROVIDED TO SPECIFY THE RESTRAINT RECOMMENDATIONS FOR SNYDER INDUSTRY BULK STORAGE TANKS.

CONCRETE:
1. CONCRETE SHALL HAVE A MINIMUM DESIGN AS PER DRAWING REFERENCED IN SPECIFICATION CHART BELOW.
2. CONCRETE PAD DESIGN SHOULD BE REVIEWED AND APPROVED BY THE BUILDING OFFICIAL BASED ON SPECIFIC APPLICATION AS OTHER DESIGN PARAMETERS ARE POSSIBLE DEPENDING UPON SITE CONDITIONS.

STRUCTURAL STEEL:
1. ALL STRUCTURAL STEEL COMPONENTS SHALL BE NEW AND OF BASIC OPEN HEARTH PROCESS STEEL CONFORMING TO ALL APPLICABLE REQUIREMENTS OF ASTM A36 (STRUCTURAL STEEL FOR BRIDGES AND BUILDINGS - Fy = 36,000 PSI.).
2. ALL ARC WELDING ELECTRODES SHALL CONFORM TO ASTM A233 FOR STEEL ARC WELDING ELECTRODES. ELECTRODES SHALL BE AS RECOMENDED BY THE MANUFACTURES FOR THE POSITIONS AND OTHER CONDITIONS OF ACTUAL USE. WELDING SHALL CONFORM TO REQUIREMENTS OF AMERICAN WELDING SOCIETY AWS D121.
3. ALL SHARP EDGES AND CORNERS SHALL BE REMOVED ON ALL STRUCTURAL STEEL COMPONENTS.
4. CABLES TO BE 7X19 STRANDED CORE CONSTUCTION SIZED PER CHART. MATERIAL TO BE SPECIFIED BY CUSTOMER ORDER (MINIMUM BREAKING STRENGTH EQUAL TO OR GREATER THAN 304 SS RATING).
5. ANCHOR BOLTS TO BE HILTI ADHESIVE ANCHORS, MODEL HVA WITH SIZE, MATERIAL, AND EMBEDMENT AS SPECIFIED PER SPECIFICATION CHART BELOW.
   ALL OTHER FASTENER MATERIALS MUST CORRESPOND TO THE TYPE OF ANCHOR SELECTED.

SNYDER INDUSTRIES INC.
LINCOLN, NE 68504 PHONE: (402)467-5221 FAX: (402)465-1210

SCALE: NTS	APPROVED BY:	DRAWN BY: J.D.
DATE: 01/07/13		REVISION: A

S.I.I. TANK SEISMIC RESTRAINT SYSTEM RECOMENDATIONS
FOR S.I.I. 6,500 & 12,500 GALLON VERTICAL STORAGE TANKS

TOLERANCES UNLESS SPECIFIED OTHERWISE
ANGULAR: ± 1°
DECIMAL: .XXX = ± 1/32"

DRAWING NUMBER
B-2497

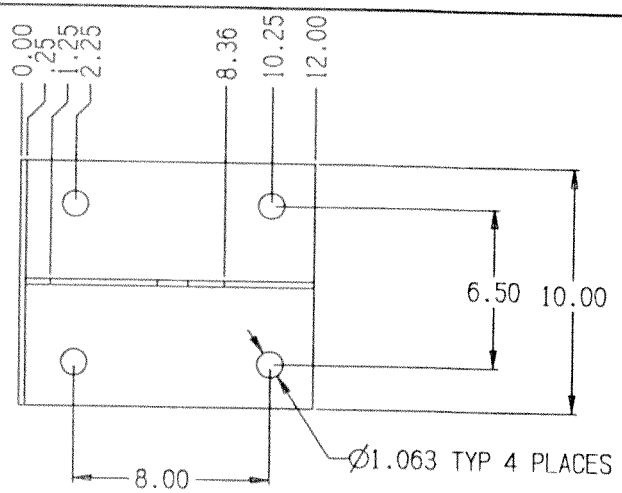

NOTES:
1. MATERIAL ASTM A-36 OR EQUAL. PLATE 1/4" THICK.
2. HOT DIP GALVANIZE THE PART PER ASTM A-123-89. ALTERNATE FINISH TO BE BLACK ENAMEL PAINT FINISH PER SII PAINTING STANDARDS. DATED 7/13/98. HOT DIP GALVANIZED IS THE PREFERRED FINISH.
3. PART SHOWN IS MADE WITH A BENT PLATE. BEND MUST BE PERPENDICULAR TO THE PLATE GRAIN.
4. WELDED FABRICATION CAN BE SUBSTITUTED FOR THE BEND, BUT WELD MUST BE FULL PENETRATION WELD FROM BOTH SIDES AND GROUND SMOOTH ON THE BOTTOM OF THE PLATE.
5. DEBUR ALL EDGES. HEAVILY DEBUR HOLE ON VERTICAL PLATE (A SMALL RADIUS IS PREFERRED).

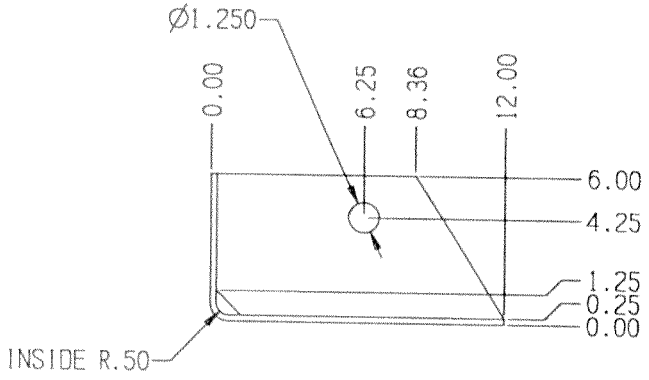

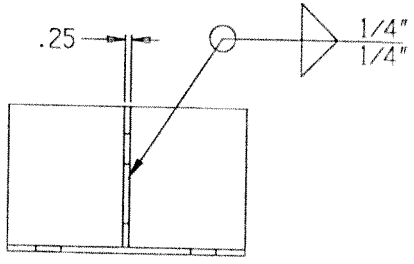

2/12/13

SNYDER INDUSTRIES INC.		
LINCOLN, NE 68504 PHONE:(402) 467-5221 FAX:(402) 467-3247		
SCALE: 1:3	APPROVED BY:	DRAWN BY: D.A.D.
DATE: 5/18/04		REVISED
SEISMIC ANCHOR PLATE - 4 BOLT VERSION		
TOLERANCES UNLESS OTHERWISE SPECIFIED: FRACTIONAL: ±1/32"; ANGULAR: ±1" DECIMAL: .X = ±0.100"; .XX = ±0.030"; .XXX = ±0.010"		DRAWING NUMBER B-2467

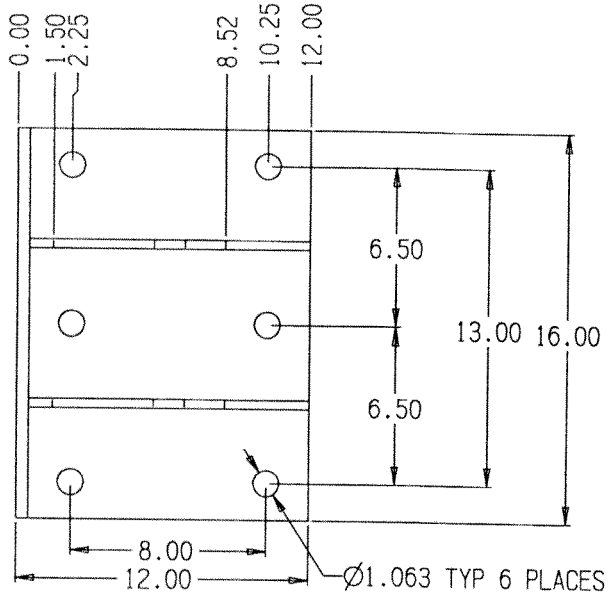

NOTES:
1. MATERIAL ASTM A-36 OR EQUAL. PLATE 3/8 AND 1/2" THICK.
2. HOT DIP GALVANIZE THE PART PER ASTM A-123-89. ALTERNATE FINISH TO BE BLACK ENAMEL PAINT FINISH PER SII PAINTING STANDARDS. DATED 7/13/98. HOT DIP GALVANIZED IS THE PREFERRED FINISH.
3. PART SHOWN IS MADE WITH A BENT PLATE. BEND MUST BE PERPENDICULAR TO THE PLATE GRAIN.
4. WELDED FABRICATION CAN BE SUBSTITUTED FOR THE BEND, BUT WELD MUST BE FULL PENETRATION WELD FROM BOTH SIDES AND GROUND SMOOTH ON THE BOTTOM OF THE PLATE.
5. DEBUR ALL EDGES. HEAVILY DEBUR HOLE ON VERTICAL PLATE (A SMALL RADIUS IS PREFERRED).

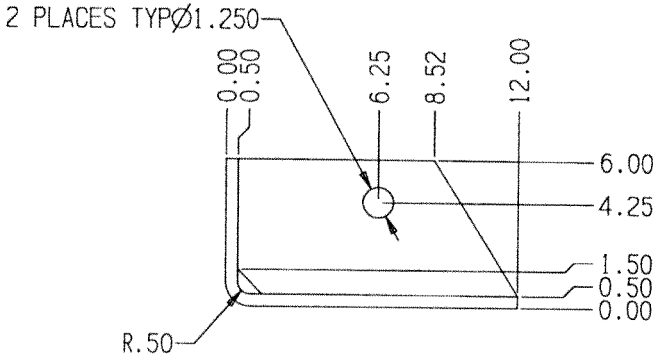

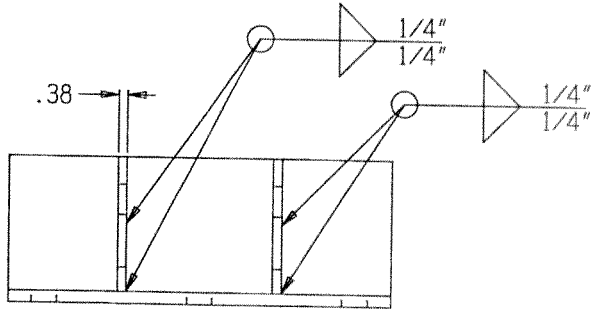

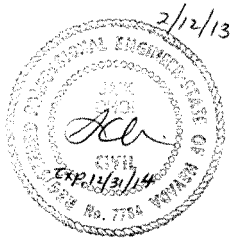

SNYDER INDUSTRIES INC.		
LINCOLN, NE 68504 PHONE:(402) 467-5221 FAX:(402) 467-3247		
SCALE: 1:3	APPROVED BY:	DRAWN BY: D.A.O.
DATE: 5/18/04		REVISED
SEISMIC ANCHOR PLATE - 6 BOLT HEAVY VERSION		
TOLERANCES UNLESS OTHERWISE SPECIFIED: FRACTIONAL: ±1/32"; ANGULAR: ±1° DECIMAL: .X = ±0.100"; .XX = ±0.030"; .XXX = ±0.010"		DRAWING NUMBER B-2469

PSC Environmental Services, LLC
Fernley, Lyon County, Nevada

Structural Calculations
For
Poly Tank Foundations

Design Code: 2009 IBC

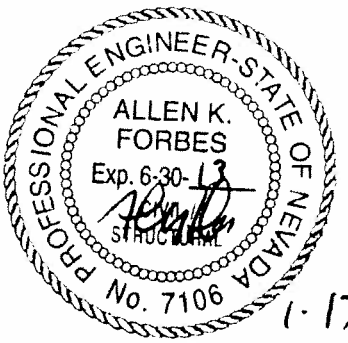

1-17-13

Prepared for:

Mr. Jim Dailey
Equipment Pro Incorporated
721 Parkwood Drive
Ste. Genevieve, MO 63670

January 11, 2013

FEG Project Number: 121039

Title : PSC Fernley, Nevada Job # 121039
Dsgnr: JJS Date: 12:07PM, 11 JAN 13
Description : Tank Footing Design

Scope :

Rev: 580002
User: KW-0603478, Ver 5.8.0, 1-Dec-2003
(c)1983-2003 ENERCALC Engineering Software

General Footing Analysis & Design

Description 6,500 Gal Tank

General Information

Code Ref: ACI 318-02, 1997 UBC, 2003 IBC, 2003 NFPA 5000

Allowable Soil Bearing	1,500.0 psf	**Dimensions...**	
Short Term Increase	1.000	Width along X-X Axis	14.000 ft
Seismic Zone	4	Length along Y-Y Axis	14.000 ft
Live & Short Term Combined		Footing Thickness	6.00 in
f'c	4,000.0 psi	Col Dim. Along X-X Axis	84.00 in
Fy	60,000.0 psi	Col Dim. Along Y-Y Axis	84.00 in
Concrete Weight	145.00 pcf	Base Pedestal Height	0.000 in
Overburden Weight	0.00 psf	Min Steel %	0.0014
		Rebar Center To Edge Distance	2.00 in

Loads

Applied Vertical Load...			
Dead Load	77.200 k	...ecc along X-X Axis	0.000 in
Live Load	k	...ecc along Y-Y Axis	0.000 in
Short Term Load	k		
	Creates Rotation about Y-Y Axis (pressures @ left & right)	Creates Rotation about X-X Axis (pressures @ top & bot)	
Applied Moments...			
Dead Load	k-ft	k-ft	
Live Load	k-ft	k-ft	
Short Term	228.100 k-ft	228.100 k-ft	
	Creates Rotation about Y-Y Axis (pressures @ left & right)	Creates Rotation about X-X Axis (pressures @ top & bot)	
Applied Shears...			
Dead Load	k	k	
Live Load	k	k	
Short Term	k	k	

Summary

Caution: X(short)ecc>Widt

14.00ft x 14.00ft Footing, 6.0in Thick, w/ Column Support 84.00 x 84.00in x 0.0in high

	DL+LL	DL+LL+ST		Actual	Allowable
Max Soil Pressure	466.4	966.3 psf	Max Mu	7.019 k-ft per ft	
Allowable	1,500.0	1,500.0 psf	Required Steel Area		0.423 in2 per ft
"X" Ecc, of Resultant	0.000 in	29.944 in			
"Y" Ecc, of Resultant	0.000 in	29.944 in	Shear Stresses....	Vu	Vn * Phi
X-X Min. Stability Ratio	2.805	1.500 :1	1-Way	76.568	107.517 psi
Y-Y Min. Stability Ratio	2.805		2-Way	54.868	131.953 psi

Footing Design

Shear Forces	ACI C-1	ACI C-2	ACI C-3	Vn * Phi
Two-Way Shear	46.92 psi	54.87 psi	35.27 psi	131.95 psi
One-Way Shears...				
Vu @ Left	33.13 psi	76.57 psi	49.22 psi	107.52 psi
Vu @ Right	33.13 psi	1.05 psi	0.67 psi	107.52 psi
Vu @ Top	33.13 psi	76.57 psi	49.22 psi	107.52 psi
Vu @ Bottom	33.13 psi	1.05 psi	0.67 psi	107.52 psi

Moments	ACI C-1	ACI C-2	ACI C-3	Ru / Phi	As Req'd
Mu @ Left	2.89 k-ft	-0.22 k-ft	-0.14 k-ft	200.5 psi	0.17 in2 per ft
Mu @ Right	2.89 k-ft	7.02 k-ft	4.51 k-ft	487.4 psi	0.42 in2 per ft
Mu @ Top	2.89 k-ft	7.02 k-ft	4.51 k-ft	487.4 psi	0.42 in2 per ft
Mu @ Bottom	2.89 k-ft	-0.22 k-ft	-0.14 k-ft	200.5 psi	0.17 in2 per ft

Title : PSC Fernley, Nevada Job # 121039
Dsgnr: JJS Date: 12:07PM, 11 JAN 13
Description : Tank Footing Design

Scope :

General Footing Analysis & Design

Description 6,500 Gal Tank

Soil Pressure Summary

Service Load Soil Pressures	Left	Right	Top	Bottom
DL + LL	466.38	466.38	466.38	466.38 psf
DL + LL + ST	0.00	966.30	966.30	0.00 psf
Factored Load Soil Pressures				
ACI Eq. C-1	559.65	559.65	559.65	559.65 psf
ACI Eq. C-2	0.00	1,352.82	1,352.82	0.00 psf
ACI Eq. C-3	0.00	869.67	869.67	0.00 psf

ACI Factors (per ACI 318-02, applied internally to entered loads)

ACI C-1 & C-2 DL	1.200	ACI C-2 Group Factor	0.750	Add'l "1.4" Factor for Seismic	1.400
ACI C-1 & C-2 LL	1.600	ACI C-3 Dead Load Factor	0.900	Add'l "0.9" Factor for Seismic	0.900
ACI C-1 & C-2 ST	1.000	ACI C-3 Short Term Factor	1.000		
....seismic = ST * :	1.100 Used in ACI C-2 & C-3				

Summary Sketch | Printing |

Print Sketch

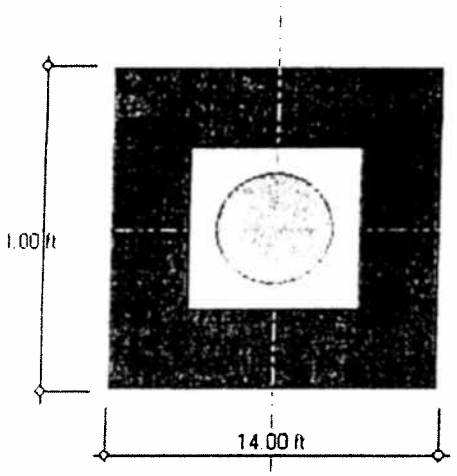

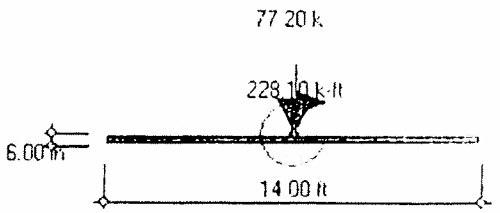

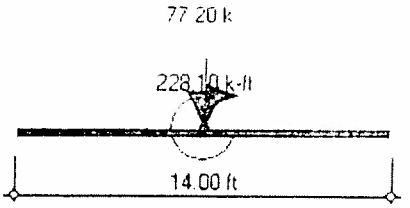

6,500 Gallon Tank

Title : PSC Fernley, Nevada Job # 121030
Dsgnr: JJS Date: 12:07PM, 11 JAN 13
Description : Tank Footing Design

Scope :

Rev: 580002
User: KW-0603478, Ver 5.8.0, 1-Dec-2003
(c)1983-2003 ENERCALC Engineering Software

General Footing Analysis & Design

Description 12,500 Gal Tank

General Information

Code Ref: ACI 318-02, 1997 UBC, 2003 IBC, 2003 NFPA 5000

Allowable Soil Bearing	1,500.0 psf	**Dimensions...**	
Short Term Increase	1.000	Width along X-X Axis	17.330 ft
Seismic Zone	4	Length along Y-Y Axis	17.330 ft
Live & Short Term Combined		Footing Thickness	6.00 in
f'c	4,000.0 psi	Col Dim. Along X-X Axis	102.00 in
Fy	60,000.0 psi	Col Dim. Along Y-Y Axis	102.00 in
Concrete Weight	145.00 pcf	Base Pedestal Height	0.000 in
Overburden Weight	0.00 psf	Min Steel %	0.0014
		Rebar Center To Edge Distance	2.00 in

Loads

Applied Vertical Load...

Dead Load	149.000 k	...ecc along X-X Axis	0.000 in
Live Load	k	...ecc along Y-Y Axis	0.000 in
Short Term Load	k		

Applied Moments...	Creates Rotation about Y-Y Axis (pressures @ left & right)	Creates Rotation about X-X Axis (pressures @ top & bot)
Dead Load	k-ft	k-ft
Live Load	k-ft	k-ft
Short Term	586.100 k-ft	586.100 k-ft

Applied Shears...	Creates Rotation about Y-Y Axis (pressures @ left & right)	Creates Rotation about X-X Axis (pressures @ top & bot)
Dead Load	k	k
Live Load	k	k
Short Term	k	k

Summary

Caution: X(short)ecc>Widt

17.33ft x 17.33ft Footing, 6.0in Thick, w/ Column Support 102.00 x 102.00in x 0.0in high

	DL+LL	DL+LL+ST
Max Soil Pressure	568.6	1,255.4 psf
Allowable	1,500.0	1,500.0 psf
"X" Ecc. of Resultant	0.000 in	41.184 in
"Y" Ecc. of Resultant	0.000 in	41.184 in
X-X Min. Stability Ratio	2.525	1.500 :1
Y-Y Min. Stability Ratio	2.525	

	Actual	Allowable
Max Mu	12.608 k-ft per ft	
Required Steel Area		0.826 in2 per ft

Shear Stresses....	Vu	Vn * Phi
1-Way	106.412	107.517 psi
2-Way	78.464	127.804 psi

Footing Design

Shear Forces	ACI C-1	ACI C-2	ACI C-3	Vn * Phi
Two-Way Shear	77.81 psi	78.46 psi	58.85 psi	127.80 psi
One-Way Shears...				
Vu @ Left	51.26 psi	106.41 psi	79.81 psi	107.52 psi
Vu @ Right	51.26 psi	-1.87 psi	-1.40 psi	107.52 psi
Vu @ Top	51.26 psi	106.41 psi	79.81 psi	107.52 psi
Vu @ Bottom	51.26 psi	-1.87 psi	-1.40 psi	107.52 psi

Moments	ACI C-1	ACI C-2	ACI C-3	Ru / Phi	As Req'd
Mu @ Left	5.80 k-ft	-0.56 k-ft	-0.42 k-ft	402.6 psi	0.34 in2 per ft
Mu @ Right	5.80 k-ft	12.61 k-ft	9.46 k-ft	875.5 psi	0.83 in2 per ft
Mu @ Top	5.80 k-ft	12.61 k-ft	9.46 k-ft	875.5 psi	0.83 in2 per ft
Mu @ Bottom	5.80 k-ft	-0.56 k-ft	-0.42 k-ft	402.6 psi	0.34 in2 per ft

General Footing Analysis & Design

Description 12,500 Gal Tank

Soil Pressure Summary

Service Load Soil Pressures	Left	Right	Top	Bottom
DL + LL	568.62	568.62	568.62	568.62 psf
DL + LL + ST	0.00	1,255.40	1,255.40	0.00 psf
Factored Load Soil Pressures				
ACI Eq. C-1	682.35	682.35	682.35	682.35 psf
ACI Eq. C-2	0.00	1,506.48	1,506.48	0.00 psf
ACI Eq. C-3	0.00	1,129.86	1,129.86	0.00 psf

ACI Factors (per ACI 318-02, applied internally to entered loads)

ACI C-1 & C-2 DL	1.200	ACI C-2 Group Factor	0.750	Add'l "1.4" Factor for Seismic	1.200
ACI C-1 & C-2 LL	1.600	ACI C-3 Dead Load Factor	0.900	Add'l "0.9" Factor for Seismic	0.900
ACI C-1 & C-2 ST	1.000	ACI C-3 Short Term Factor	1.000		
....seismic = ST * :	1.100 Used in ACI C-2 & C-3				

6/12

Summary Sketch | Printing |

Print Sketch

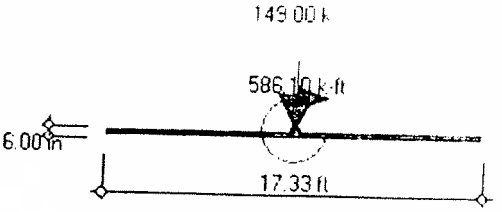

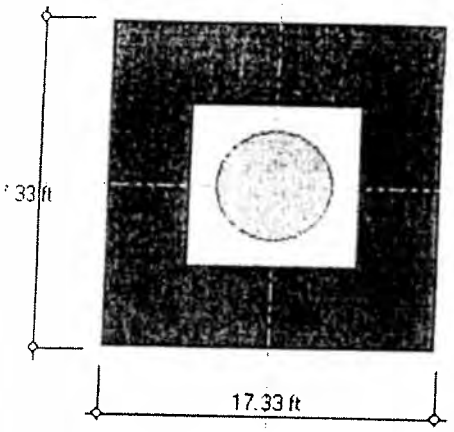

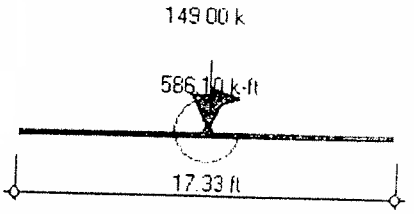

12,500 Gallon Tank

Jaik Choi Associates
Structural Engineering
(949)706-7789, Fax:(424)239-2666
email; jcse@msn.com

Snyder Industries

Lincoln, NE

Sheet No
Job No 12-932A
Date: 12/20/12
By: J. Choi

C) FOUNDATION DESIGN

SII Vertical Ground Supported Tank (flat bottom)

Desgin loads = Vs = 0.434 W

Hc; Height of tank content
Ht; Height of tank top
We; Empty Weight of tank
Wc; Content Weight in tank
Wt; Total Weight of tank
Wf; Footing Weight
SG; Specific Gravity
Fd; Footing Diameter
Fe; Footing Edge Distance
Ft; Footing Thickness
Mf; Moment in the footing
Mot; Overturning Moment
Mr; Resisting Moment
F.S.; Factor of Safety for Overturning
SL; Sliding resistance
Fa; Soil bearing value (Direct)
Fb; Soil bearing value (Overturing)
Fs; Soil bearing value (Total)
b; Soil reaction resultant location
Sf; Section Modulus of footing
As; Area of reinforcing steel required

Design Parameter

Allow. Bearing "Fb"=	1500 psf x 1.33 =	1995 psf
Passive Pressure "Pp"=	250 psf x 1.33 =	332.5 psf
Friction Coeff. = u =	0.3	

1) Overturning

Mot = Vs*Hc/2
Total Dl.(TD) = W + Wt. Ftg.
Mresist (Mr) = TD*.5*Fw
Factor of Safety "F.S."=Mr/Mot = > 1.5

2) Sliding of Foundation

Load = Fp = Vs
Resist = u*Total Dl.+ Passive Pressure
SL > Vs

3) Soil Bearing

Result @ (Mr-Mot)/TD="b"
Fa = (Wt + Wf) / (.785*Fd^2)
Fb = (Wt + Wf)*(.5*Fd-b)/Sf
Fs = (Fa + Fb) psf < 1995 O.K.

SERVICE DEAD LOAD USED IN ENVELOPE

Design for Specific gravity (SG) = 1.4

INPUT PARAMETERS | **FOUNDATION SIZES**

PART NUMBER	TANK SIZE (GAL.)	TANK DIA. (FT.)	Hc (FT.)	Ht (FT.)	We (LBS.)	Wc (LBS.)	Wt (LBS.)	Fe (FT.)	Fd (FT.)	Ft (FT.)	b (FT.)	Wf (LBS.)
7140--	6500	10.00	11.59	12.64	1450	75839	77289	2.00	14.00	1.00	4.73	23079
5350--	12500	11.83	15.12	16.45	3100	145845	148945	2.75	17.33	1.50	5.76	53046

ULTIMATE SEISMIC OVERTURNING LOAD USED IN ENVELOPE

RESULTS | **SOIL BEARING & FOOTING REINFORCING**

PART NUMBER	Vs (LBS.)	SL (LBS.) > Vs	Mot (ft-k)	Mr (ft-k)	F.S. > 1.5	Fa psf	Fb psf	Fs psf	Mf ft.-k	As in2	Reinf. Size	in. o.c.
7140--	33569	31155	228.1	703	3.08	652	847	1499	2.84	0.14	# 4 @	17
5350--	64691	64541	586.1	1750	2.99	857	1147	2004	7.12	0.20	# 4 @	12

8/12

Title : PSC Fernley, Nevada
Dsgnr: JJS
Description : Tank Footing Design
Scope :

Job # 121039
Date: 12:34PM, 11 JAN 13

General Footing Analysis & Design

Description 7,400 Gal Tank on Existing 12" Concrete Pad

General Information

Code Ref: ACI 318-02, 1997 UBC, 2003 IBC, 2003 NFPA 5000

Allowable Soil Bearing	1,500.0 psf
Short Term Increase	1.000
Seismic Zone	4
Live & Short Term Combined	
f'c	4,000.0 psi
Fy	60,000.0 psi
Concrete Weight	145.00 pcf
Overburden Weight	0.00 psf

Dimensions...	
Width along X-X Axis	14.500 ft
Length along Y-Y Axis	14.500 ft
Footing Thickness	12.00 in
Col Dim. Along X-X Axis	102.00 in
Col Dim. Along Y-Y Axis	102.00 in
Base Pedestal Height	0.000 in
Min Steel %	0.0014
Rebar Center To Edge Distance	5.00 in

Loads

Applied Vertical Load...

Dead Load	87.500 k	...ecc along X-X Axis	0.000 in
Live Load	k	...ecc along Y-Y Axis	0.000 in
Short Term Load	k		

Applied Moments...	Creates Rotation about Y-Y Axis (pressures @ left & right)	Creates Rotation about X-X Axis (pressures @ top & bot)
Dead Load	k-ft	k-ft
Live Load	k-ft	k-ft
Short Term	382.400 k-ft	382.400 k-ft

Applied Shears...	Creates Rotation about Y-Y Axis (pressures @ left & right)	Creates Rotation about X-X Axis (pressures @ top & bot)
Dead Load	k	k
Live Load	k	k
Short Term	k	k

Summary

Caution: X(short)ecc>Widt

14.50ft x 14.50ft Footing, 12.0in Thick, w/ Column Support 102.00 x 102.00in x 0.0in high

	DL+LL	DL+LL+ST
Max Soil Pressure	561.2	1,353.1 psf
Allowable	1,500.0	1,500.0 psf
"X" Ecc, of Resultant	0.000 in	38.893 in
"Y" Ecc, of Resultant	0.000 in	38.893 in
X-X Min. Stability Ratio	2.237	1.500 :1
Y-Y Min. Stability Ratio	2.237	

	Actual	Allowable
Max Mu	5.998 k-ft per ft	
Required Steel Area		0.259 in2 per ft

Shear Stresses....	Vu	Vn * Phi
1-Way	37.588	107.517 psi
2-Way	21.720	142.041 psi

Footing Design

Shear Forces	ACI C-1	ACI C-2	ACI C-3	Vn * Phi
Two-Way Shear	20.71 psi	21.72 psi	16.29 psi	142.04 psi
One-Way Shears...				
Vu @ Left	14.37 psi	37.59 psi	28.19 psi	107.52 psi
Vu @ Right	14.37 psi	-5.01 psi	-3.75 psi	107.52 psi
Vu @ Top	14.37 psi	37.59 psi	28.19 psi	107.52 psi
Vu @ Bottom	14.37 psi	-5.01 psi	-3.75 psi	107.52 psi

Moments	ACI C-1	ACI C-2	ACI C-3	Ru / Phi	As Req'd
Mu @ Left	2.24 k-ft	-0.78 k-ft	-0.59 k-ft	50.9 psi	0.26 in2 per ft
Mu @ Right	2.24 k-ft	6.00 k-ft	4.50 k-ft	136.0 psi	0.26 in2 per ft
Mu @ Top	2.24 k-ft	6.00 k-ft	4.50 k-ft	136.0 psi	0.26 in2 per ft
Mu @ Bottom	2.24 k-ft	-0.78 k-ft	-0.59 k-ft	50.9 psi	0.26 in2 per ft

General Footing Analysis & Design

Description 7,400 Gal Tank on Existing 12" Concrete Pad

Soil Pressure Summary

Service Load Soil Pressures	Left	Right	Top	Bottom
DL + LL	561.17	561.17	561.17	561.17 psf
DL + LL + ST	0.00	1,353.14	1,353.14	0.00 psf
Factored Load Soil Pressures				
ACI Eq. C-1	673.41	673.41	673.41	673.41 psf
ACI Eq. C-2	0.00	1,623.77	1,623.77	0.00 psf
ACI Eq. C-3	0.00	1,217.82	1,217.82	0.00 psf

ACI Factors (per ACI 318-02, applied internally to entered loads)

ACI C-1 & C-2 DL	1.200	ACI C-2 Group Factor	0.750	Add'l "1.4" Factor for Seismic	1.200
ACI C-1 & C-2 LL	1.600	ACI C-3 Dead Load Factor	0.900	Add'l "0.9" Factor for Seismic	0.900
ACI C-1 & C-2 ST	1.000	ACI C-3 Short Term Factor	1.000		
....seismic = ST * :	1.100 Used in ACI C-2 & C-3				

Summary Sketch | Printing |

Print Sketch

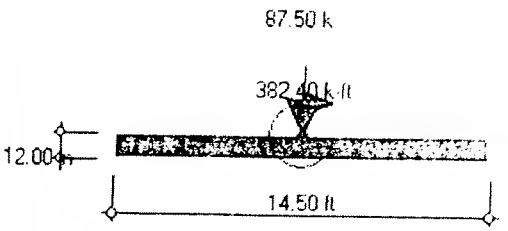

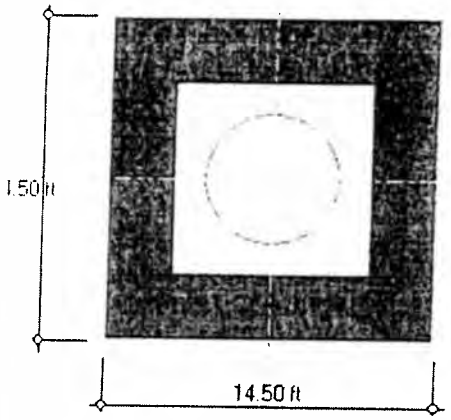

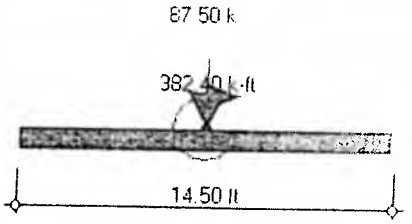

Jaik Choi Associates
Structural Engineering
(949)706-7789, Fax:(424)239-2666
email, jcse@msn.com

Snyder

Lincoln, NE

Sheet No
Job No 12-932A
Date 12/20/12
By J. Choi

Structural Calculations for the footing supporting tank

C) FOUNDATION DESIGN

Vertical Ground Supported Tank (Cone bottom)

Desgin loads = Vs = 0.434 W

Design Parameter

Allow. Bearing "Fb"=	1500 psf x 1.33 =	1995 psf
Passive Pressure "Pp"=	250 psf x 1.33 =	332.5 psf
Friction Coeff = u =	0.4	

Hc; Height of tank content
Ht; Height of tank top
We; Empty Weight of tank
Wc; Content Weight in tank
Wt; Total Weight of tank
Wf; Footing Weight
SG; Specific Gravity
Fd; Footing Diameter
Fe; Footing Edge Distance
Ft; Footing Thickness
Mf; Moment in the footing
Mot; Overturning Moment
Mr; Resisting Moment
F.S.; Factor of Safety for Overturning
SL; Sliding resistance
Fa; Soil bearing value (Direct)
Fb; Soil bearing value (Overturing)
Fs; Soil bearing value (Total)
b; Soil reaction resultant location
Sf; Section Modulus of footing
As; Area of reinforcing steel required

1) Overturning

Mot = Vs*Hc/2
Total Dl.(TD) = W + Wt. Ftg
Mresist (Mr) = TD*.5*Fw
Factor of Safety "F.S."=Mr/Mot = > 1.5

2) Sliding of Foundation

Load = Fp = Vs
Resist = u*Total Dl.+ Passive Pressure
SL > Vs

3) Soil Bearing

Result @ (Mr-Mot)/TD="b"
Fa = (Wt + Wf) / (785*Fd^2)
Fb = (Wt + Wf)*(.5*Fd-b)/Sf
Fs = (Fa + Fb) psf < 1995 O.K.

Design for Specific gravity (SG) = 1.4

Footing width = 14.50 ft
Saddle dist. = 8.30 ft

SERVICE DEAD LOAD USED IN ENERCALC

INPUT PARAMETERS

FOUNDATION SIZES

PART NUMBER	TANK SIZE (GAL.)	TANK DIA (FT.)	Hcg (FT.)	Ht (FT.)	We (LBS.)	Wc (LBS.)	Wt (LBS.)	Fe (FT.)	Fd (FT.)	Ft (FT.)	b (FT.)	Wf (LBS.)
5320000N	7400	11.83	9.06	13.36	1200	86340	87540	1.33	14.49	1.00	3.84	24723

RESULTS

SOIL BEARING & FOOTING REINFORCING

PART NUMBER	Vs (LBS.)	SL (LBS.) > Vs	Mot (ft-k)	Mr (ft-k)	F.S. > 1.5	Fa psf	Fb psf	Fs psf	Mf ft-k	As in2	Reinf Size	in. o.c
5320000N	38014	45987	382.4	813	2.13	681	1280	1962	3.59	0.19	# 4 @	13

ULTIMATE SEISMIC OVERTURNING LOAD USED IN ENERCALC

Frontenac Engineering Group
2725 Sutton Boulevard
Saint Louis, Missouri 63143
314-644-2200 Fax 314-644-0645

JOB 151639 [illegible]
SHEET NO 12 OF [illegible]
CALCULATED BY JJS DATE 1/11/12
CHECKED BY _____ DATE _____
SCALE _____

DETERMINE SIZE + SPACING OF REINFORCING

1. 6,500 GALLON TANK

$A_{s\,req} = 0.42\ in^2/ft$

PROVIDE NO. 6 BARS @ 12" O.C. EACH WAY

$A_{s\,provided} = 0.44\ in^2/ft$ ok

2. 12,500 GALLON TANK

$A_{s\,req} = 0.83\ in^2/ft$

PROVIDE NO. 6 BARS @ 6" O.C.

$A_{s\,provided} = 0.88\ in^2/ft$ ok

3. 7,400 GAL. TANK

TANK RESTS ON EXISTING 12" CONC PAD + REQUIRES ONLY MINIMUM REINFORCING. ASSUME EXISTING PAD CONTAINS SUFFICIENT REINFORCING. ok

Frontenac Engineering Group
2725 Sutton Boulevard
Saint Louis, Missouri 63143
314-644-2200 Fax 314-644-0645

JOB 121039 PSC NEVADA
SHEET NO. 12A OF 12
CALCULATED BY JJS DATE 1/15/13
CHECKED BY DATE
SCALE

CHECK CONC. SLAB FOR PUNCHING SHEAR

OVERTURNING MOMENT:

$M_{OT} = 382.4$ Kft

DEAD WT OF STRUCTURE:

$W_t = 87.5$ Kips

DISTANCE B/W SUPPORTS

$D = 11'$

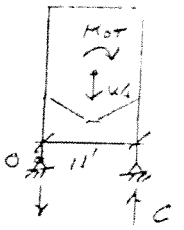

ASSUME COMPRESSION FORCE IS DISTRIBUTED B/W (2) 4"x3½"x¼" ANGLE SUPPORTS.

$\Sigma M_o = 0$

$M_{OT} + W_t \times D/2 = C \times D$

$1.0(382.4) + 1.2(87.5)(5.5) = C \times 11$

$C = 87.3$ Kips (ULTIMATE DOWNWARD FORCE)

ULTIMATE FORCE PER ℄

$V_u = \frac{1}{2} C = 43.7$ Kips

$c_1 = 4"$

$c_2 = 3.5"$

$d = 6"$

$c_1 + d = 10"$

$c_2 + d = 9.5"$

$b_o = 2(c_1 + d) + 2(c_2 + d)$

$b_o = 39$ in

$\phi V_c = \phi 4 \lambda \sqrt{f'_c}\, b_o d$

$\phi V_c = 0.75(4)\sqrt{4000}\,(27)(6)$

$\phi V_c = 41.4$ Kips $< V_u = 43.7$ Kips ∴ (SOME OF THE COMPRESSION FORCE WILL BE DISTRIBUTED TO ADJACENT BASE PLATE)

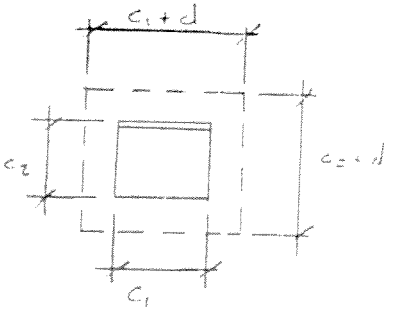

∴ SLAB IS ADEQUATE TO RESIST PUNCHING SHEAR

Pastic Tank Chemical Resistance Chart for Polypropylene, Polyethylene Linear and Crosslink, gasket materials.

This Chemical Resistance Chart is provided as a general guide. Confirm this information with your chemical sales agent, get him to confirm container materials and get your MSDS report.

(No responsibility for performance is accepted, based on these guidelines) Remember chemical compounds have different characteristics as the compound's constituents percentages of concentrations CHANGE, temperature, pressure, particulate content, trace metals; all have an impact on corrosion.

Read The Above, it is very IMPORTANT that you understand these variables as you utilize this chart as a guide...

PE = Polyethylene... PP = Polypropylene... XLPE = Crosslink Polyethylene... A = Excellent... B = Good... C = Not suggested

Chemical resistance information. You can search this page by using your browser's *Find on this page* option.

Chemical Resistance Data

		TANK MATERIALS						FITTING MATERIAL							
		PE		PP		XLPE		PVC	CPVC	EPDM	NEOPRENE	VITON	316 SS	TITANIUM	HASTELLOY C
REAGENT	CONC.	70	140	70	140	70	140								
Acetone		C	C	C	C	C	C	C	C	C	C	C	C	C	C
Acetaldehyde*	100%	B	C	A	B	B	C	C	C	A	C	C	A	A	A
Acetic Acid*	10%	A	A	A	A	A	A	A	A	A	A	B	A	A	A
Acetic Acid*	60%	A	B	A	A	A	A	A	A	A	B	B	A	A	A
Acetic Anhydride		C	C	-	-	C	C	C	C	B	A	C	A	A	A
Air		A	A	A	A	A	A	A	A	A	A	A	A	A	A
Aluminum Chloride	all concentr.	A	A	A	A	A	A	A	A	A	A	A	C	B	A
Aluminum Fluoride	all concentr.	A	A	A	A	A	A	A	A	A	A	A	C	A	B
Aluminum Sulphate	all concentr.	A	A	A	A	A	A	A	A	A	A	A	B	A	B
Alums	all types	A	A	A	A	A	A	A	A	A	A	A	A	-	A
Ammonia	100% dry gas	A	A	A	A	A	A	B	A	A	A	A	A	C	A
Ammonium Carbonate		A	A	A	A	A	A	A	A	A	A		B	A	B
Ammonium Chloride	sat'd	A	A	A	A	A	A	A	A	A	A	A	C	B	A
Ammonium Fluoride	sat'd	A	A	A	A	A	A	A	A	B	A	A	C	A	A
Ammonium Hydroxide	10%	A	A	A	A	A	A	A	A	B	A	B	A	A	B
Ammonium Hydroxide	28%	A	A	A	A	A	A	A	A	A	A	B	A	A	B
Ammonium Nitrate	sat'd.	A	A	A	A	A	A	A	A	A	B	A	A	A	B
Ammonium Persulphate	sat'd.	A	A	A	A	A	A	A	A	A	A	A	B	A	B
Ammonium Sulphate	sat'd.	A	A	A	A	A	A	A	A	A	A	A	B	A	B
Ammonium Metaphoshate	sat'd.	A	A	A	A	A	A	A	A	A	A	A	B	A	B
Ammonium Sulfide	sat'd.	A	A	A	A	A	A	A	A	A	A	A	B	A	B
Amyl Acetate*#	100%	C	C	B	C	C	C	C	C	A	C	C	A	A	A
Amyl Alcohol*#	100%	A	A	A	B	A	A	A	A	A	A	B	A	B	A
Amyl Chloride*#	100%	C	C	C	C	C	C	C	C	C	C	B	A	C	A
Aniline*#	100%	C	C	A	A	A	C	C	C	B	C	C	B	C	B

Aqua Regia+		C	C	C	C	C	C	C	C	C	C	B	C	A	C				
Arsenic Acid	all concentr.	A	A	A	A	A	A	A	A	A	A	A	A	B	B				
Aromatic Hydrocarbons*#		C	C	-	-	C	C	C	C	C	C	A	C	-	-				
Ascorbic Acid	10%	A	A	A	A	A	A	A	A	A	A	A	-	-	-				
Barium Carbonate	sat'd.	A	A	A	A	A	A	A	A	A	A	A	B	A	B				
Barium Chloride	sat'd.	A	A	A	A	A	A	A	A	A	A	A	A	A	B				
Barium Hydroxide		A	A	A	A	A	A	A	A	A	A	A	B	B	A				
Barium Sulphate	sat'd.	A	A	A	A	A	A	B	B	A	A	A	B	B	-				
Barium Sulphate	sat'd.	A	A	A	A	A	A	A	A	A	A	A	B	A	A				
Beer		A	A	A	A	C	C	A	A	A	C	A	A	B	B				
Benzene*#		C	C	B	C	C	C	C	C	C	C	A	B	A	B				
Benzoic Acid	all concentr.	A	A	A	A	A	A	A	A	C	A	A	B	B	A				
Bismuth Carbonate	sat'd.	A	A	A	A	A	A	A	A	A	A	A	A	A	B				
Bleachlye	10%	A	A	A	A	A	A	A	A	A	A	A	A	B	B				
Borax	sat'd.	A	A	A	A	A	A	A	A	A	A	A	A	B	A				
Boric Acid	all concentr.	A	A	A	A	A	A	A	B	A	A	A	A	A	A				
Boron Trifluoride		A	A	-	-	A	A	A	A	A	A	A	-	B	-				
Brine		A	A	A	A	A	A	A	A	A	A	A	C	A	A				
Bromine+	liquid	C	C	C	C	C	C	C	C	C	C	A	C	A	A				
Bromine Water #	sat'd.	C	C	C	-	C	C	C	C	C	C	A	C	A	A				
Butanediol*	10%	A	A	A	A	A	A	-	-	-	-	-	-	-	-				
Butanediol*	60%	A	A	A	A	A	A	-	-	-	-	-	-	-	-				
Butanedial*	100%	A	A	A	A	A	A	-	-	-	-	-	-	-	-				
Butter*		A	A	A	A	C	C	-	A	A	B	A	A	-	-				
n-Butyl Acetate*#	100%	A	C	C	C	A	C	B	C	B	C	B	B	A	A				
n-Butyl Alcohol	100%	A	A	A	-	A	A	A	B	B	A	A	A	A	A				
Butyric Acid#	conc.	C	C	-	-	-	-	B	B	B	C	B	B	A	A				
Calcium Bisulphide		A	A	A	A	A	A	A	A	A	A	A	B	A	-				
Calcium Carbonate	sat'd.	A	A	A	A	A	A	A	A	A	A	A	B	B	B				
Calcium Chlorate	sat'd.	A	A	A	A	A	A	A	A	A	-	A	-	-	-				
Calcium Chloride	sat'd.	A	A	A	A	A	A	A	A	B	A	A	B	A	A				
Calcium Hydroxide	conc.	A	A	A	A	A	A	A	A	B	C	A	B	A	B				
Calcium Hyphochlorite	bleach sol'n.	A	A	A	B	B	B	B	B	A	C	A	C	-	B				
Calcium Nitrate	50%	A	A	A	A	A	A	A	A	A	B	A	A	A					
Calcium Oxide	sat'd.	A	A	-	-	A	A	A	A	A	A	A	A	A	A				
Calcium Sulphate		A	A	A	A	A	A	A	A	A	C	-	B	A	A				
Camphor Oil*#		C	C	C	C	C	C	-	-	-	-	A	A						
Carbon Dioxide	all concentr.	A	A	A	A	A	A	A	A	A	A	A	A	A	A				
Carbon Disulphide		C	C	B	C	C	C	C	C	C	C	A	B	B	B				
Carbon Monoxide		A	A	A	A	A	A	A	A	A	A	A	A	A	A				
Carbon Tectrachloride#		C	C	C	C	C	C	B	C	C	C	A	B	A	A				
Carbonic Acid		A	A	A	A	A	A	A	A	A	A	A	A	B	A				
Caster Oil#	conc.	A	A	A	A	A	A	A	A	A	A	A	A	A	A				
Chlorine+	100% dry gas	C	C	C	C	B	C	C	C	C	C	A	C	C	B				
Chlorineliquid+		C	C	C	C	C	C	A	A	C	C	A	C	A	A				
Chlorine Water+	2% sat'd. sol'n.	A	A	A	B	A	A	A	A	C	C	A	C	A	A				

Chlorobenzene*#		C	C	C	C	C	C	C	C	C	C	A	A	A	B						
Chlorofoam*#		B	C	C	C	C	C	C	C	C	C	A	A	A	A						
Chlorosulphonic Acid	100%	C	C	C	C	C	C	C	C	C	C	C	B	C	A						
Chrome Alum	sat'd.	A	A	A	A	A	A	A	A	A	A	A	A	A	A						
Chromic Acid	80%	-	-	A	-	-	-	C	C	C	C	B	B	C	B						
Chromic Acid	50%	A	B	A	A	A	B	B	B	B	C	A	B	C	B						
Chromic Acid	10%	A	A	A	A	A	A	A	A	B	C	A	B	C	B						
Cider*		A	A	A	A	C	C	-	-	-	A	A	A	A	-						
Citric Acid*	sat'd.	A	A	A	A	A	A	-	B	A	A	A	A	A	A						
Coconut Oil Alcohols*		A	A	A	A	A	A	A	A	A	A	A	A	A	A						
Coffee		A	A	A	A	A	A	A	A	A	A	A	A	A	A						
Cola Concentrates*		A	A	A	A	A	A	A	A	A	A	A	A	A	A						
Copper Chloride	sat'd.	A	A	A	A	A	A	A	A	A	A	A	C	A	A						
Copper Cyanide	sat'd.	A	A	A	A	A	A	A	A	A	A	A	B	B	B						
Copper Fluoride	2%	A	A	A	A	A	A	A	A	A	-	A	A	A	A						
Copper Nitrate	sat'd.	A	A	A	A	A	A	A	A	-	A	A	B	B	A						
Copper Sulphate	sat'd.	A	A	A	A	A	A	A	A	A	A	A	B	A	A						
Corn Oil*		A	A	A	A	A	A	A	A	A	A	A	A	A	A						
Cottonseed Oil*		A	A	A	A	A	A	A	A	A	A	A	A	A	A						
Cuprous Chloride	sat'd.	A	A	A	A	A	A	A	A	A	A	A	C	A	A						
Detergents, Synthetic*		A	A	A	A	A	A	A	A	A	A	A	A	A	A						
Developers, Photographic		A	A	A	A	A	A	A	A	-	-	-	A	A	A						
Dextrin	sat'd.	A	A	A	A	A	A	A	A	A	A	A	A	A	A						
Destrose	sat'd.	A	A	A	A	A	A	A	A	A	A	A	A	A	A						
Diazo Salts		A	A	A	A	A	A	A	A	-	-	-	-	-	-						
Dibutylphthalate*#		B	B	A	B	B	B	C	C	-	-	-	A	-	-						
Dichlorobenzene*#		C	C	-	-	C	C	-	-	-	-	-	-	-	-						
Diethyl Ketone*#		B	B	-	-	B	C	-	-	-	-	-	-	-	-						
Diethylene Glycol*		A	A	A	A	A	A	C	C	A	A	A	A	A	B						
Diglycolic Acid*		A	A	-	-	A	A	A	A	A	-	A	A	A	-						
Dimethylamine		C	C	-	-	C	C	C	C	C	A	C	A	-	-						
Disodium Phosphate		A	A	A	A	A	A	A	A	-	-	A	A	A	-						
Emulsions, Photgraphic*		A	A	A	A	A	A	A	A	A	A	A	A	A	A						
Ethyl Acetate*#	100%	B	C	B	B	B	C	C	C	B	C	C	A	A	A						
Ethyl Alcohol*	100%	A	A	A	A	A	A	A	A	A	A	A	A	A	A						
Ethyl Alcohol*	35%	A	A	A	A	A	A	A	A	A	A	A	A	A	A						
Ethyl Benzene*#		C	C	C	C	C	C	-	-	-	-	-	A	-	-						
Ethyl Chloride#		C	C	C	C	C	C	C	C	A	B	A	A	A	A						
Ethyl Ether#		C	C	B	C	C	C	C	C	C	C	C	A	A	B						
Ethylene Chloride*#		C	C	C	C	C	C	C	C	A	B	A	A	B	C						
Ethylene Glycol*		A	A	A	A	A	A	A	A	A	A	A	A	A	B						
Fatty Acids*		A	A	A	A	A	A	B	B	C	B	A	A	B	A						
Ferric Chloride	sat'd.	A	A	A	A	A	A	A	A	A	B	A	C	A	B						
Ferric Nitrate	sat'd.	A	A	A	A	A	A	A	A	A	A	A	A	A	B						
Ferrous Chloride	sat'd.	A	A	A	A	A	A	A	A	A	A	A	C	A	B						
Ferrous Sulphate		A	A	A	A	A	A	A	A	A	A	A	A	A	A						
Fish Solubles*		A	A	A	A	A	A	A	A	A	A	A	A	A	A						
Fluoboric Acid		A	A	A	A	A	A	A	A	A	A	A	C	C	A						
Fluosillic Acid	conc.	A	B	A	B	A	A	A	A	A	A	A	B	C	A						
Fluosillic Acid	32%	A	A	A	A	A	A	A	A	A	A	A	B	C	A						

Formic Acid	all concentr.	A	A	A	A	A	A	A	A	A	A	C	C	C	A
Fructose	sat'd.	A	A	A	A	A	A	A	A	A	A	A	A	A	A
Fruit Pulp*		A	A	A	A	A	A	A	A	A	A	A	A	A	A
Furtural#	100%	B	C	C	C	C	C	C	C	B	C	C	B	B	A
Furfuryl Alcohol*#		B	C	C	C	C	C	-	-	-	-	A	A	-	-
Gallic Acid*	sat'd.	A	B	A	A	A	A	A	B	B	B	A	B	A	B
Gasoline*#		B	C	B	C	A	C	C	C	C	B	A	A	A	A
Glucose		A	A	A	A	A	A	A	A	A	A	A	A	A	A
Glycerine*		A	A	A	A	A	A	A	A	A	A	A	A	A	A
Glycol*		A	A	A	A	A	A	A	A	A	A	A	A	A	A
Glycolic Acid*	30%	A	A	A	A	A	A	A	A	A	A	A	A	A	A
Grape Sugar	sat'd. ag.	A	A	A	A	A	A	A	A	A	A	A	A	A	A
n-Heptane*#		B	B	-	-	A	C	C	A	C	A	A	A	A	A
Hexachlorobenzene		A	-	-	-	A	A	-	-	-	-	-	-	-	-
Hexanol, Tertiary*		A	A	-	-	A	A	-	-	-	-	B	A	A	-
Hydrobromic Acid	50%	A	A	A	A	A	A	A	A	A	B	A	C	A	B
Hydrobromic Acid	all conc.	A	A	A	A	A	A	A	A	A	-	A	C	C	A
Hydrobromic Acid	sat'd.	A	A	-	-	A	A	A	A	A	-	A	C	B	
Hydrochloric Acid		A	A	-	-	A	A	A	A	A	-	A	C	B	A
Hydrofluoric Acid*	60%	A	A	A	A	A	A	A	A	A	-	A	C	C	A
Hydrogen	100%	A	A	A	A	A	A	A	A	A	A	A	A	A	A
Hydrogen Chloride	dry gas	A	A	A	A	A	A	-	-	-	-	-	-	-	-
Hydrogen Peroxide	30%	B	B	A	-	A	A	A	A	-	-	A	B	B	A
Hydrogen Peroxide	10%	A	A	A	B	A	A	A	A	-	-	A	B	B	A
Hydrogen Sulphide		A	A	A	A	A	A	A	A	A	A	C	B	A	A
Hydroquinone		A	A	A	A	A	A	A	A	-	C	A	-	-	-
Hypochlorous Acid	conc.	A	A	A	A	A	A	A	A	-	-	A	-	A	A
Inks#		A	A	A	A	A	A	A	A	-	-	A	C	A	A
Iodine+	in kI sol'n	B	-	-	-	B	C	C	C	B	C	A	C	C	B
Isopropyl Alcohol	100%	-	-	A	A	A	A	A	A	-	A	A	A	A	A
Lead Acetate	sat'd.	A	A	A	A	A	A	A	A	A	A	A	A	A	A
Lead Nitrate		A	A	-	-	A	A	A	A	A	A	A	A	A	A
Lactic Acid*	20%	A	A	A	A	A	A	A	A	A	A	A	B	B	B
Linseed Oil*	100%	B	C	A	A	A	C	A	A		A	A	A	A	A
Magnesium Carbonate	sat'd.	A	A	A	A	A	A	A	A	A	A	A	A	A	A
Magnesium Chloride	sat'd.	A	A	A	A	A	A	A	A	A	A	A	A	A	A
Magnesium Hydroxide	sat'd.	A	A	A	A	A	A	A	A	A	A	A	A	A	A
Magnesium Nitrate	sat'd.	A	A	A	A	A	A	A	A	A	A	A	A	A	A
Magnesium Sulphate	sat'd.	A	A	A	A	A	A	A	A	A	A	A	A	A	A
Mercuric Chloride	40%	A	A	A	A	A	A	A	A	A	A	A	C	A	C
Mercuric Cyanide	sat'd.	A	A	A	A	A	A	B	A		A	A	C	A	
Mercury		A	A	A	A	A	A	B	A	A	A	A	A	A	A
Methyl Alcohol*	100%	A	A	A	A	A	A	A	A	B	B	C	A	A	C
Methylethyl Ketone*#	100%	B	C	A	B	B	C	C	C	A	C	C	A	A	A
Methylene Chloride*#	100%	C	C	B		C	C	C	C	C	C	C	A	A	B
Milk		A	A	A	A	C	C	A	A	A	A	A	A	A	A
Mineral Oils#		B	C	A	B	A	C	A	A	A	A	A	A	A	A
Molasses		A	A	A	A	A	A	A	A	C	A	A	A	A	A
Naptha*#		B	C			B	C	A	A	C	C	A	A	A	A

Naphthalene*#		B		A	A	C	C	C	C	C	C	A	A	A	A
Nickel Chloride	conc.	A	A	A	A	A	A	A	A	A	A	A	C	A	B
Nickel Nitrate	sat'd.	A	A	A	A	A	A	A	A	A	A	A	B	B	B
Nickel Sulphate	conc.	A	A	A	A	A	A	A	A	A	A	A	B	B	B
Nicotine*	dilute	A	A	A	A	A	A	A	A						
Nitric Acid	0-30%	A	A	C	C	A	A	A	A	B	A	A	A	A	A
Nitric Acid+	30-50%	A	B	C	C	A	B	B	B	B	A	A	A	A	A
Nitric Acid+	70%	A	B	C	C	A	B	C	C	C	A	A	A	A	A
Nitric Acid+	95-98%	C	C	C	C	C	C	C	C	C		A	A	A	A
Nitrobenzene*#	100%	C	C	C	C	C	C	C	C	C	C	B	A	A	C
n-Octane		A	A			A	A								
Oleic Acid		B	C	A	B	A	C	C	A	B	C	B	B	C	B
Oxalic Acid*	sat'd.	A	A	A	B	A	A	A	C	A	B	A	B	C	B
Perchloroethylene#		C	C			C	C	C	B	C	C	A	A	A	B
Phosphoric Acid	95%	A	A	A	A	A	B	B	A	B	B	A	B	B	A
Photographic Solutions		A	A	A	A	A	A	A	A	B	A	A	A	A	A
Plating Solutions*															
Brass		A	A	A	A	A	A	A	A	A	A	A	A	A	A
Cadium		A	A	A	A	A	A	A	A	C	C	A	A	C	A
Chromium		A	A	A	A	A	A	A	A		B	A	C	C	C
Copper		A	A	A	A	A	A	A	A		A	A	A	A	A
Gold		A	A	A	A	A	A	A	A		A	A	A	A	A
Indium		A	A	A	A	A	A	A	A		A	A			
Lead		A	A	A	A	A	A	A	A			A	C	C	A
Nickel		A	A	A	A	A	A	A	A			A	C	A	C
Rhodium		A	A	A	A	A	A	A	A			A	A	C	A
Silver		A	A		A	A	A	A	A			A	C	C	A
Tin		A	A	A	A	A	A	A	A			A	C	A	A
Zinc		A	A	A	A	A	A	A	A		A	A	C	A	B
Potassium Bicarbonate	sat'd.	A	A	A	A	A	A	A	A	A	A	A	B	A	B
Potassium Bromide	sat'd.	A	A	A	A	A	A	A	A	A	A	A	B	A	B
Potassium Bromate	10%	A	A	A	A	A	A	A	A	A	A	A	B	A	B
Potassium Carbonate		A	A	A	A	A	A	A	A	A	A	A	B	A	B
Potassium Chlorate	sat'd.	A	A	A	A	A	A	A	A	A	A	A	B	A	B
Potassium Chloride	sat'd.	A	A	A	A	A	A	A	A	A	A	A	B	A	B
Potassium Chromate	40%	A	A	A	A	A	A	A	A	A	A	A	B	A	B
Potassium Cyanide	sat'd.	A	A	A	A	A	A	A	A	A	A	A	B	A	B
Potassium Dichromate	40%	A	A	A	A	A	A	A	A	A	A	A	B	A	B
Potassium Ferri/Ferro Cyanide	sat'd.	A	A	A	A	A	A	A	A	A	A	A	B	A	B
Potassium Fluoride		A	A	A	A	A	A	A	A	A	A	A	B	A	B
Potassium Hydroxide	conc.	A	A	A	A	A	A	A	A	A	B	B	B	A	B
Potassium Nitrate	sat'd.	A	A	A	A	A	A	A	A	A	A	A	B	A	B
Potassium Perborate	sat'd.	A	A	A	A	A	A	A	A	A	A	A	B	A	B
Potassium Perchlorate	10%	A	A	A	A	A	A	A	A	A	A	A	B	A	B
Potassium Permanganate	20%	A	A	A	A	A	A	A	A	A	A	A	B	A	B
Potassium Persulphate	sat'd.	A	A			A	A	A	A	A	A	A	B	A	B

http://www.tanksystems.com/chemical%20chart.htm

Potassium Sulphate	conc.	A	A	A	A	A	A	A	A	A	C	A	B	A	B				
Potassium Sulphide	conc.	A	A	A	A	A	A	A	A	A	C	A	B	A	B				
Potassium Sulphite	conc.	A	A	A	A	A	A	A	A	A	C	A	B	A	B				
Propargyl Alcohol*		A	A			A	A												
n-Propyl Alcohol*		A	A	A	A	A	A	A			A	A	A	A	A				
Propylene Dichloride*#	100%	C	C	C	C	C	C	A				A	C	A	B				
Propylene Glycol*		A	A			A	A	C			C	A	B	A	B				
Pyridine*		A		A		A	C	C	B	B	C	C	A	B	B				
Resorcinol	sat'd.	A	A			A	A												
Sallcylic Acid	sat'd.	A	A			A	A	A	A	A	A	A	A	A	A				
Sea Water		A	A	A	A	A	A	A	A	A	A	A	A	A	A				
Selenic Acid		A	A			A	A	A	A	A									
Shortening*		A	A	A	A	A	A	A	A	A	A	A	A	A	A				
Silver Nitrate Solution		A	A	A	A	A	A	A	A	A	A	A	A	A	A				
Soap Solution*	any con	A	A	A	A	A	A	A	A	A	A	A	A	A	A				
Sodium Acetate	sat'd.	A	A	A	A	A	A	B	B	A	B	C	B	A	A				
Sodium Benzoate	35%	A	A	A	A	A	A	A	A	A	A	A	A	A	A				
Sodium Biscarbonate	sat'd.	A	A	A	A	A	A	A	A	A	B	C	B	B	B				
Sodium Bisulphate	sat'd.	A	A	A	A	A	A	A	A	A	C	A	B	B	A				
Sodium Bisulphite	sat'd.	A	A	A	A	A	A	A	A	A	A	A	B	B	A				
Sodum Borate		A	A	A	A	A	A	A	A	A	A	A	B	A	A				
Sodium Bromide	dilute	A	A	A	A	A	A	A	A	A	A	A	A	A	A				
Sodium Carbonate	conc.	A	A	A	A	A	A	A	A	A	A	C	A	A	A				
Sodium Chlorate	sat'd.	A	A	A	A	A	A	A	A	A	A	A	B	A	B				
Sodium Chloride	sat'd.	A	A	A	A	A	A	A	A	A	A	A	C	A	A				
Sodium Cyanide		A	A	A	A	A	A	A	A	A	A	A	B	A	A				
Sodium Dichromate	sat'd.	A	A	A	A	A	A	A	A	A	A	A	A	A	A				
Sodium Ferri/Ferro Cyanide	sat'd.	A	A	A	A	A	A	A	A	A	A	A	A	A	A				
Sodium Fluoride	sat'd.	A	A	A	A	A	A	A	A	A	C	A	C	A	A				
Sodium Hydroxide	conc.	A	A	A	A	A	A	A	A	A	B	A	B	B	B				
Sodium Hypochlorite	1	A	A	A	B	B	B	B	B	B	C	A	C	C	B				
Sodium Nitrate		A	A	A	A	A	A	A	A	A	B	A	B	A	B				
Sodium Sulphate		A	A	A	A	A	A	A	A	A	B	A	B	A	B				
Sodium Sulphide	sat'd.	A	A	A	A	A	A	A	A	A	A	A	B	A	B				
Sodium Sulphite	sat'd.	A	A	A	A	A	A	A	A	A	A	A	B	A	B				
Stannic Chloride	sat'd.	A	A	A	A	A	A	A	A	B	C	A	C	A	B				
Stannous Chloride	sat'd.	A	A	A	A	A	A	A	A	A	A	A	A	A	B				
Starch Solution*	sat'd.	A	A	A	A	A	A	A	A	A	A	A	A	A	A				
Stearic Acid*	100%	A	A	A	A	A	A	B	B	B	B	A	A	A	B				
Sulphuric Acid	0-50%	A	A	A	B	A	A	A	A	B	C	A	C	C	B				
Sulphuric Acid +	70%	A	B	A	B	A	B	A	A	B	C	A	C	C	B				
Sulphuric Acid +	80%	A	C	C	C	A	B	A	A	B		A	C	C	B				
Sulphuric Acid +	96%	B	C	C		A	B	C	B	B	C	A	C	C	B				
Sulphuric Acid +	98-conc.	B	C	C		B	C	C	B	B	C	A	C	C	B				
Sulphuric Acid +	fuming	C	C	C	C	C	C	C	B	C	C	A	C	C	C				
Sulphurous Acid		A	A	A	A	A	A	A	A	B	C	A	B	A	B				
Tallow#		A		A	A	A	B					A	A						
Tannic Acid*	sat'd.	A	A	A	A	A	A	A	A	A	B	A	A	A	B				
Tartaric Acid		A	A	A	A	A	A	A	A	B	B	A	C	A	B				
Tetrolydrofuran*#		B	C	C	C	C	C	C	C	B	C	C	A	A	A				
Titanium Tetrachloride*	sat'd.	C				C	C						A						

Toluene*		B	B	C	C	C	C	C	C	C	C	C	A	A	A				
Trichloroethylene*#		C	C	C	C	C	C	C	C	C	C	A	B	A	B				
Triethylene Glycol*		A	A			A	A						A	A	A				
Trisodium Phosphate	sat'd.	A	A	A	A	A	A	A	A	A	A	A	A	A	A				
Turpentine#		C	C	C	C	C	C	B	B	C	C	A	A	B	B				
Urea	30%	A	A	A	A	A	A	B	B				A						
Urine		A	A	A	A	A	A	A	A	A	C	A	A						
Vanilla Extract*		A	A	A	A	A	A												
Vinegar		A	A	A	A	A	A	A	A	A	C	A	A	A	A				
Water		A	A	A	A	A	A	A	A	A	A	A	A	A	A				
Wetting Agent*		A	A	A	A	A	A												
Whiskey*		A	A	A	A	C	C	A	A	A	A	A	A	A	A				
Wines*		A	A	A	A	A	C	C	A	A	A	A	A	A	A				
Xylene#		C	C	C	C	C	C	C	C	C	C	C	A	A	A				
Yeast		A	A	A	A	A	A	A	A	A	A	A	A	A	A				
Zinc Bromide	sat'd.	A	A			A	A	A	A	A	A	A	A	A	A				
Zinc Carbonate	sat'd.	A	A			A	A	A	A	A	A	A	A	A	A				
Zinc Chloride	sat'd.	A	A	A	A	A	A	A	A	A	A	A	A	A	A				
Zinc Oxide	sat'd.	A	A	A	A	A	A	A	A	A	A	A	A	A	A				
Zinc Stearate		A	A			A	A	A	A	A	A	A	A	A	A				
Zinc Sulphate	sat'd.	A	A	A	A	A	A	A	A	A	A	A	A	A	A				

AlltanksCom LLC.

Ask for Art Woods

Email Art at sales@tanksystems.com

Mail: *PO Box 680747 Houston, Texas 77268*

Ship: *32926 Tamina - Magnolia, Texas 77354*

Phones: *800.537.9444*

01/13/2013

INSPECTION CHECKLIST FOR INDUSTRIAL TANKS

Work Order Number: 344119 SO Number: 142623 Order Qty: 1 Part Number 5320000N97401

Tank Description: Size 7400CB

Specific Gravity 1.5 Material HD/NAT Serial Number 1301275496

Circle YES or NO or NA Below as Required

Audit: Yes No If yes, attach audit. Correct Audit 600 psi 750 psi Other _____

Hydro test: Yes No Percent Gel test 65% minimum: _____ or NA

Drop dart: Pass Fail NFI/NE

Sumo Test: Pass Fail NA What psi _____ How long _____

IF THIS IS A NO HOLES NO FITTING TANK SKIP SECTIONS A & B. NHNF: Yes

SECTION A - FITTINGS – SPECIFICATION:

Note: Proper application and installation of fittings are critical to the success of an SII tank. Please follow this procedure.

Is the application correct? Circle YES or NO or NA

- Are we using the correct gaskets per the order? Viton or Epdm
- Is the material correct for encapsulated bolts? Stainless (natural) Hastaloy (yellow) Titanium (green)
- Do the pvc fitting U-vents, siphon tubes, etc. have enough glue? (see evidence in the joints) . . Yes No NA

SECTION B - FITTINGS – LOCATION:

- Fitting layout per cut sheet correct? . . . . . Yes No

If no, explain discrepancies _____

Are the hole sizes correct for the fittings? . . . . . Yes No

Are the gasket areas smooth and even thicknesses on the inside of the tank? (no bumps) . . . . . Yes No

Have the fittings been torque to 1/3 compression on the gasket? . . . . . Yes No

If no, explain (hand tight), etc. _____

SECTION C - EXTRA'S – SUPPLEMENTAL HARDWARE: (includes ladders, down tubes, sight gages, additional plumbing, etc.)

The following have been installed and found to fit and function properly.

Level sensor Y or N Settings: Tank height _____ Fluid level _____ Gallons per inch _____

Down pipe Y or N Welds tested with soft mallet Y or N

Other Items

lid inst AV 1-23-13

Tank washed inside/out [illegible]

Final Buyoff: Production [illegible] 1-25-13 Quality BC 1-25-13

(I have checked the above mentioned tank and documentation and have found all to be acceptable.)

SII "7,400 30 DEGREE C.B." 142" DIA. VERTICAL, CONE BOTTOM TANK

9.823	OVER ALL CYL. HEIGHT (FEET)	15.996	DOME HEIGHT (INCHES)
600	TENSILE STRENGTH (PSI)	613.36	CAP. IN DOME TOP
8.49	SIDE WALL HEIGHT (FEET)	7794.16	MIN. TANK CAP.(GAL.)
142	DIAMETER (INCHES)		CHARGE WEIGHT (LBS.)
1.5	SPECIFIC GRAVITY	_____	OVEN CYCLE TIME (MIN)
0.4	AVG. THICKNESS TOP (INCHES)	_____	OVEN TEMP. (DEG."F")
	BOTTOM THICKNESS (INCHES)	_____	DELAY (MIN.)
	FEET FROM OUT SIDE EDGE	_____	COOLING AIR (MIN.)
0.50	0.5 ` # 544	_____	COOLING WATER (MIN.)
0.46	1 ` # 500 483	_____	COOLING AIR (MIN)
0.39	2 ` #	_____	OVEN DAMPER American
0.3	CENTER # 415	_____	MACHINE/ARM Process
		_____	ROTATION SC 14263

DIST.FROM BOTTOM(FT)	DESIGN WALL		SIDE THICKNESS CUTOUT	9.29	18.59	27.88	(FEET)
29	0.00	# #					
28	0.00	# #					
27	0.00	# #					
26	0.00	# #					
25	0.00	# #					
24	0.00	# #					
23	0.00	# #					
22	0.00	# #					
21	0.00	# #					
20	0.00	# #					
19	0.00	# #					
18	0.00	# #					
17	0.00	# #					
16	0.00	# #					
15	0.00	# #					
14	0.00	# #					
13	0.00	# #					
12	0.00	# #					
11	0.00	# #					
10	0.00	# #					
9	0.00	# #					
8	0.30	# #					
7	0.30	# #					
6	0.30	# #					
5	0.30	# #					
4	0.35	# #		415		421	
3	0.42	# #		457		460	
2	0.50	# #		495		521	
1	0.58	# #		521		583	
0.5	.61			539		607	

DATE: 1-24-13
SERIAL #: 130125496
POWDER TYPE: EXAM
INSTRUMENT CALIBRATED
CUTOUT:
LOT #:
PART COLOR: WHT
PIGMENT WEIGHT (GRAMS
GEL %:
DROP DART WEIGHT:
DROP DART HEIGHT:
DROP DART TEMPERATUR
DROP DART RESULTS:
Q.A. PERSONNEL:
COMMENTS:

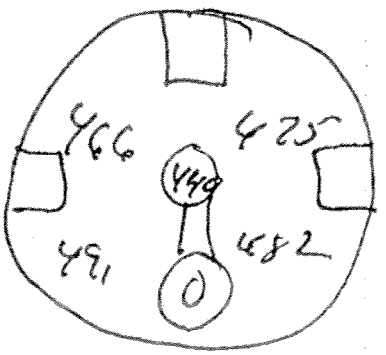

Tank Data Sheet

RCRA Regulated? YES

Tank Location: Dewatering Area

Tank Name: Post-Treatment Tank

Tank Numbers: 303-306

Process Description: Storage/Settling of Post-Treatment Effluent

Vessel Fluid: Neutralized/Treated Liquids w/Treatment Chemical Residuals

Specific Gravity: <1.50

Freeboard At Working Vol (ft^3): 33.42

Normal Operating Pressure: ATMOSPHERIC

Temperature (F°) AMBIENT

	Material	Thickness	Type
Bottom	Virgin linear polyethylene	1.4" avg.	Flat
Shell	Virgin linear polyethylene	1.05" avg.	CYLINDRICAL-VERTICAL
Roof	Virgin linear polyethylene	0.45" avg.	dome

Working Volume (USG): 12,500 gallons

Insulation: NONE

Nominal Volume (USG): 12,750 gallons

Method of Construction: rotational molding process

Tank O.D. (ft): 11' 10"

Tank Height or Length (ft): 16' 6"

Design Code Used: IBC 2006 AISC 13th Edition

Date In Service: PLANNED TANKS

Anchorage: seismic restraints bolted to concrete. Anchorage designs per 2006 IBC.

Connections:

Item No:	Size (In.)	Gasket	Description	Interior Coating:	none
A	24		PE Threaded-vented manway w/22" access	Exterior Coating:	none
B	3		S.U.M.O w/ss insert, viton o-rings & PVC adapter	Tank Mfger:	Snyder Industries Inc.
			ASM 3" CPVC SUMO adapter	Remarks:	

ALL TANKS
PO #12-986

TANK 2 OF 4

SNYDER INDUSTRIES INC.

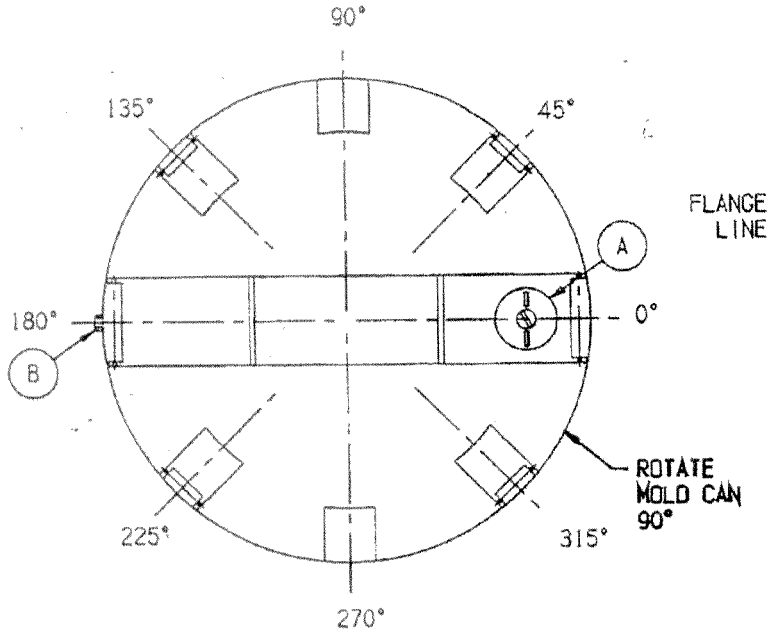

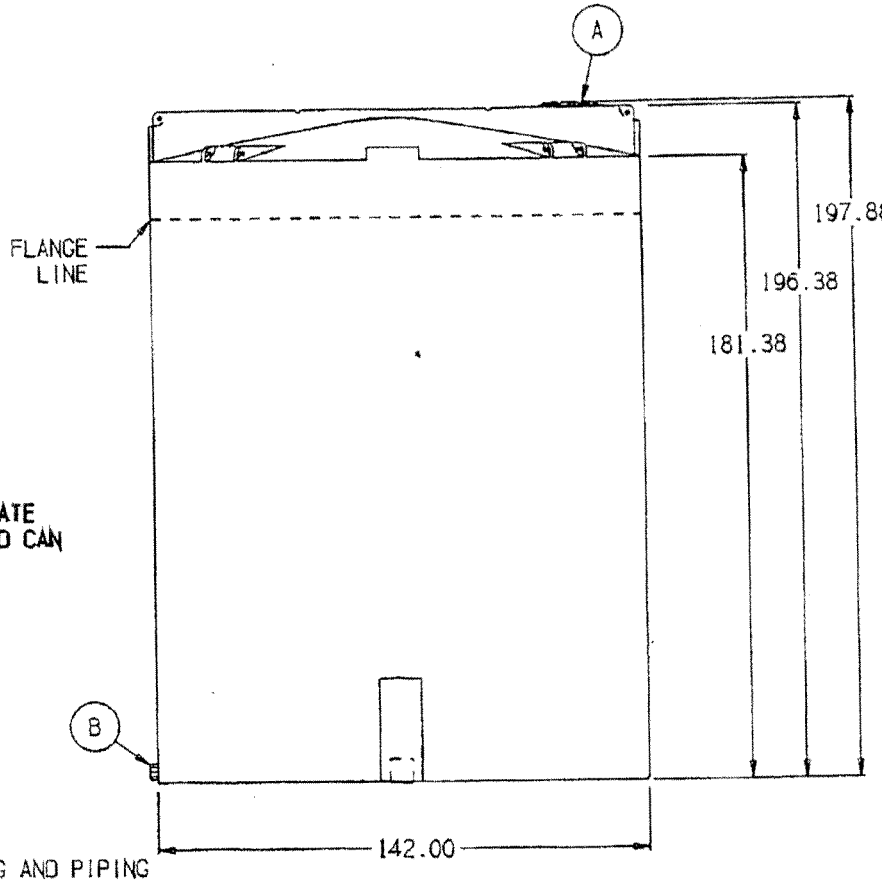

NOTE:
ADEQUATE CLEARANCE MUST BE ALLOWED FOR S.U.M.O. FITTING AND PIPING ACCESSORIES. A NOTCH IN THE TANK SUPPORT PAD MAY BE ADVISABLE. ALL EXTERNAL PIPING MUST BE INDEPENDENTLY SUPPORTED.

A. 24" PE THREADED-VENTED MANWAY W/22" ACCESS [P/N 34700352]
B. 3" S.U.M.O. W/SS INSERT, VITON O-RINGS & PVC ADAPTER [P/N 34700299]
B. ASM 3" CPVC SUMO ADAPTER [P/N 35900511]

* BASE FITTINGS TO BE LEFT INSTALLED AT TIME OF SHIPMENT PER SII PROCEDURE
* Consult Snyder's Guidelines for Use and Installation prior to delivery. Available on-line at www.snydernet.com

ALL DIMENSIONS, DESIGNS, AND INFORMATION ON THIS PRINT MUST BE CONSIDERED PROPRIETARY TO SNYDER INDUSTRIES, INC. AND MAY NOT BE USED, COPIED, OR DISTRIBUTED WITHOUT WRITTEN PERMISSION OF AN OFFICER (OR HIS AGENT) OF THE FIRM.

APPROVED: 12/21/12

SIGNATURE: _____ DATE: ____
DRAWING NOT VALID UNLESS SIGNED
(all dimensions in inches)

PART #: 12/19
TANK: 5350011N97401
HDLPE/NATURAL/1.5 SG
ROTATE MOLD CAN 90°
REF#: 29881 12/19/12

12,500 GALLON FLAT BOTTOM TANK

© SNYDER INDUSTRIES, INC., 2012

13012750 70 OK to cut DP 1/18/13

303

INSPECTION CHECKLIST FOR INDUSTRIAL TANKS

Work Order Number: 352238 SO Number: 146963 Order Qty: 1 of 3 Part Number I253500301620

Tank Description: Size 12500V SUMO

Specific Gravity 1.5 Material HD/NAT Serial Number 1303276283

Circle YES or NO or NA Below as Required

Audit: (Yes) No If yes, attach audit. Correct Audit (600 psi) 750 psi Other _____

Hydro test: Yes (No) Percent Gel test 65% minimum: _____ or NA

Drop dart: Pass Fail

Sumo Test: (Pass) Fail NA What psi 60 psi How long 30 min AV 3-21-13

IF THIS IS A NO HOLES NO FITTING TANK SKIP SECTIONS A & B. NHNF: Yes

SECTION A - FITTINGS – SPECIFICATION:

Note: Proper application and installation of fittings are critical to the success of an SII tank. Please follow this procedure.

Is the application correct? Circle YES or NO or NA

- Are we using the correct gaskets per the order? Viton or Epdm
- Is the material correct for encapsulated bolts? Stainless (natural) Hastaloy (yellow) Titanium (green)
- Do the pvc fitting U-vents, siphon tubes, etc. have enough glue? (see evidence in the joints) . . Yes No NA

SECTION B - FITTINGS – LOCATION:

- Fitting layout per cut sheet correct? . . . . . Yes No

If no, explain discrepancies _____

Are the hole sizes correct for the fittings? . . . . . Yes No

Are the gasket areas smooth and even thicknesses on the inside of the tank? (no bumps) . . . . . Yes No

Have the fittings been torque to 1/3 compression on the gasket? . . . . . Yes No

If no, explain (hand tight), etc. _____

SECTION C - EXTRA'S – SUPPLEMENTAL HARDWARE: (includes ladders, down tubes, sight gages, additional plumbing, etc.)

The following have been installed and found to fit and function properly.

Level sensor Y or N Settings: Tank height _____ Fluid level _____ Gallons per inch _____

Down pipe Y or N Welds tested with soft mallet Y or N

Other Items

All items per line inst/Boxed pic taken AV 3-21-13

One Box to Ship inside tank AV 3-21-13

Box Placed in TANK (Pic)

TANK Washed Inside/out (Pic)

AV 3-22-13

Final Buyoff: Production _____ Quality _____

(I have checked the above mentioned tank and documentation and have found all to be acceptable.)

ALL TANKS LLC
10-8512

TANKS 1-3

ROTATE CAN 180°

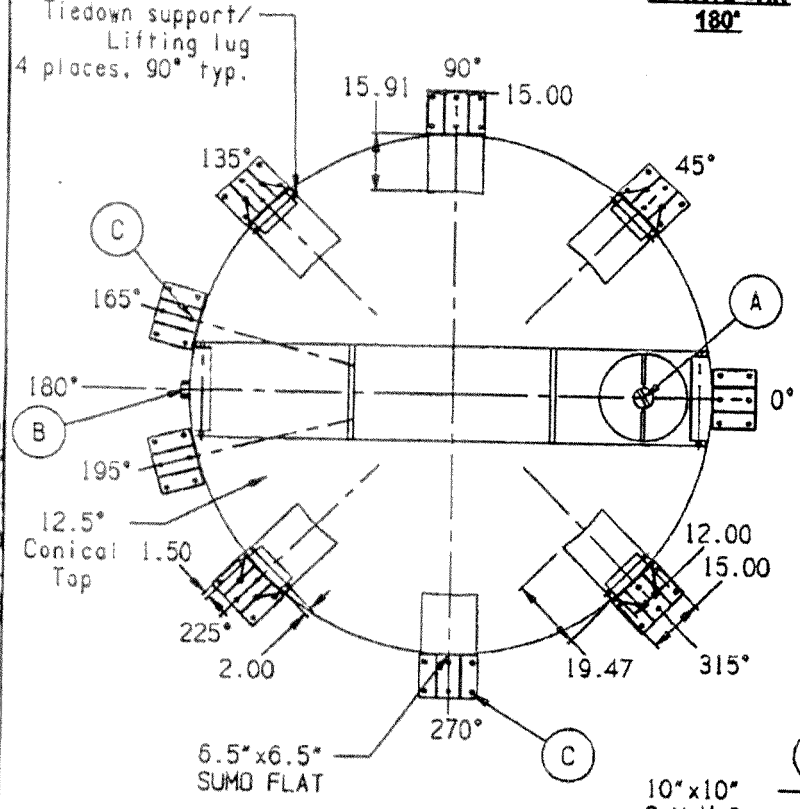

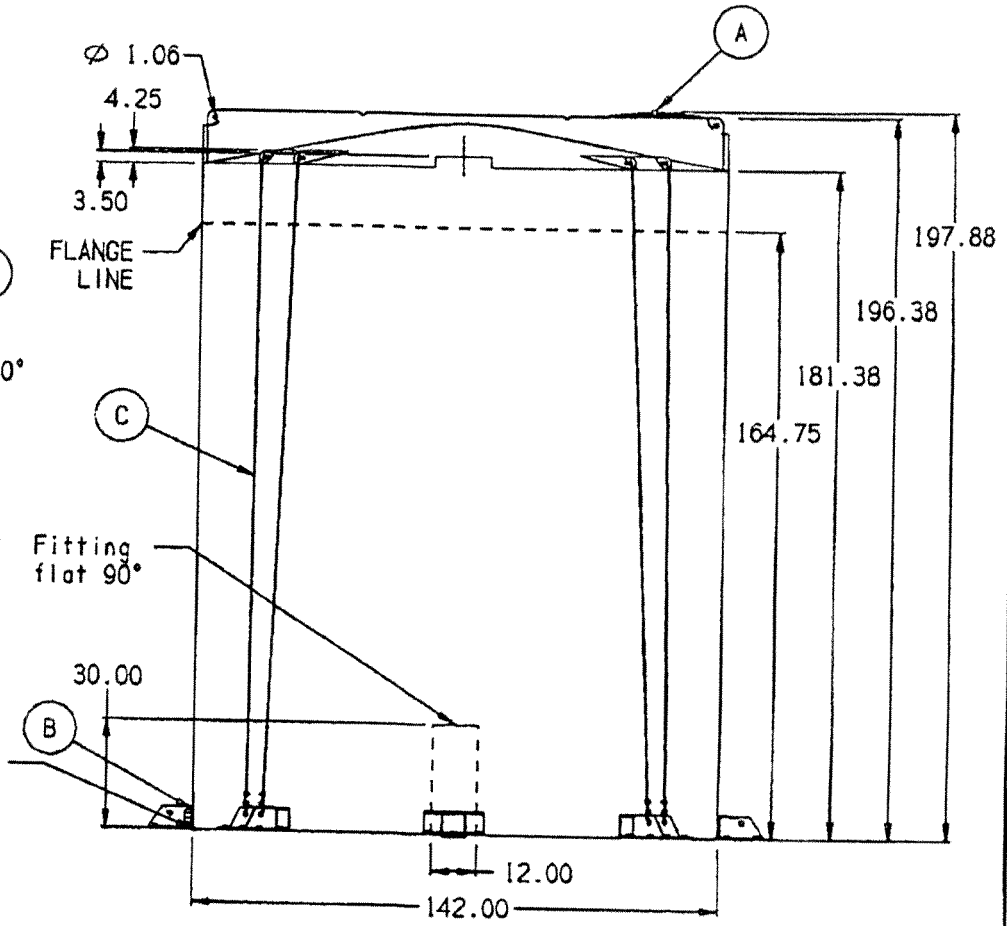

NOTES:

ALL EXTERNAL PIPING MUST BE INDEPENDENTLY SUPPORTED

A. 24" PE THREADED-VENTED MANWAY W/22" ACCESS [P/N 34700352]
B. 3" S.U.M.O. W/SS INSERT, VITON O-RINGS & PVC ADAPTER [P/N 34700299]
B. ASM 3" CPVC SUMO ADAPTER [P/N 35900511]
C. SEISMIC GS CABLE TIE-DOWN SYSTEM [P/N 34700173]
C. GALVANIZED STEEL SEISMIC ANCHOR PLATE - 6 BOLT STANDARD VERSION [P/N 33900408]

* BASE FITTINGS TO BE LEFT INSTALLED AT TIME OF SHIPMENT PER SII PROCEDURE
* Consult Snyder's Guidelines for Use and Installation prior to delivery. Available on-line at www.snydernet.com

ALL DIMENSIONS, DESIGNS, AND INFORMATION ON THIS PRINT MUST BE CONSIDERED PROPRIETARY TO SNYDER INDUSTRIES, INC. AND MAY NOT BE USED, COPIED, OR DISTRIBUTED WITHOUT WRITTEN PERMISSION OF AN OFFICER (OR HIS AGENT) OF THE FIRM.

APPROVED: 2/24/13

SIGNATURE: _____ DATE: ____

DRAWING NOT VALID UNLESS SIGNED

(all dimensions in inches)

PART #: PRIMARY: 535001IN97401
HDLPE/NATURAL/1.5 SG

REF#: 30162

02/22/13

12,500 GALLON FLAT BOTTOM TANK

© SNYDER INDUSTRIES, INC., 2012

SNYDER INDUSTRIES INC.

1303276282x3

SII "12500V" 142" G-SERIES VERTICAL, CONE TOP TANK

16.36 OVER ALL TANK HEIGHT (FEET)
600 TENSILE STRENGTH (PSI)
15.11 SIDE WALL HEIGTH (FEET)
142 DIAMETER (INCHES)
1.5 SPECIFIC GRAVITY
0.45 AVG. THICKNESS TOP (INCHES)
BOTTOM THICKNESS (INCHES)
FEET FROM OUT SIDE EDGE

0.7	0.5 " #	685
0.6	1 " #	710
0.5	2 " #	681
0.4	CENTER #	661

15 DOME HEIGHT (INCHES)
574.01 CAP. IN DOME TOP
12779.2 MIN. TANK CAP.(GAL.)
2566.15 CHARGE WEIGHT (LBS.)
_____ OVEN CYCLE TIME (MIN)
_____ OVEN TEMP. (DEG."F")
_____ DELAY (MIN.)
_____ COOLING AIR (MIN.)
_____ COOLING WATER (MIN.)
_____ COOLING AIR (MIN)
_____ OVEN DAMPER
_____ MACHINE/ARM
_____ ROTATION

American Process

So 146963

DIST.FROM BOTTOM(FT)	DESIGN WALL		SIDE THICKNESS CUTOUT	9.29	18.59	27.88 (FEET)
15	0.30	# #				
14	0.30	# #				
13	0.30	# #				
12	0.30	# #				
11	0.32	# #				
10	0.39	# #				
9	0.47	# #				
8	0.55	# #				
7	0.62	# #				
6	0.70	# #				
5	0.78	# #				
4	0.85	# #		860		829
3	0.93	# #		945		880
2	1.01	# #		985		975
1	1.08	# #		1036		1025
0.5	1.12	# #		1210		1241

DATE: 3-22-13
SERIAL #: 130327623
POWDER TYPE: EXXON
INSTRUMENT CALIBRATED TO
CUTOUT:
LOT #:
PART COLOR: NAT
PIGMENT WEIGHT (GRAMS):
GEL %:
DROP DART WEIGHT:
DROP DART HEIGHT:
DROP DART TEMPERATURE:
DROP DART RESULTS:
Q.A. PERSONNEL:
COMMENTS:

Top View

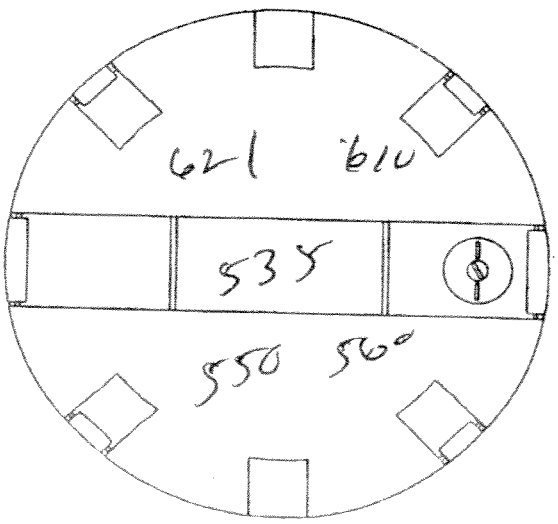

Bottom View

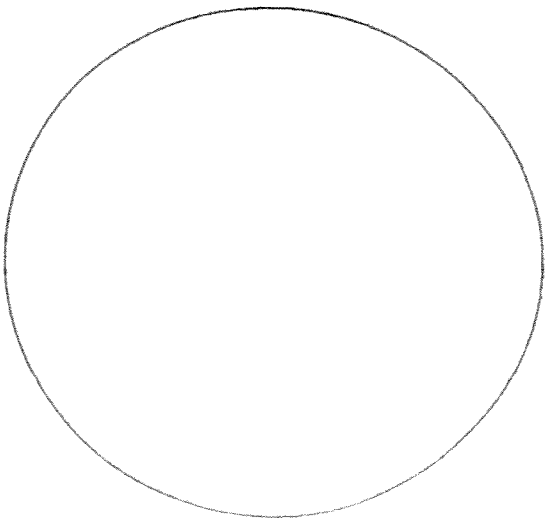

tobey wade
STRUCTURAL ENGINEERS

June 10, 2013
Project No. R405-08-13

Ms. Tracy Buono
Facility/Operations Manager
PSC FERNLEY FACILITY
2095 Newlands Drive East
Fernley, NV 89408

RE: TANK 303 INTERIM CERTIFICATION

Dear Ms. Buono:

In accordance with the Fernley Facility Amended Tank Replacement Plan dated December 17, 2012, and Appendix D-6 of the pending July 2012 RECRA Permit, each new tank is required to be certified by an Independent Registered Professional Engineer (IRPE) prior to being placed into service. This letter has been prepared to document the evaluation of Tank 303 as performed by Tobey-Wade Consulting.

It should be noted that Tank 303 currently has permanent bulkhead fittings with valves for connection of temporary discharge lines. The permanent process piping servicing Tank 303 will be installed in Phase 3 as outlined in the above-referenced documents. Accordingly, this certification is being provided as an interim certification. Final certification of Tank 303 will be provided after the permanent piping and all other associated permanent systems have been installed and inspected.

Background

Tank 303 is a virgin linear polyethylene tank as manufactured by Snyder Industries, Inc. and it has a 12,500 gallon capacity. Snyder Industries has provided data relative to the tank's strength.

Jaik Choi Associates conducted a stability analysis and designed anchorage for the tank. Tobey-Wade Consulting evaluated the existing foundation and designed a new reinforced concrete pad based on loads provided by Jaik Choi Associates.

Certification of the tank shell's compatibility with the proposed waste stream has been provided by others.

Findings

Based on our evaluation, the following systems are hereby certified as being in compliance with the Amended Tank Replacement plan:

- Tank 303 has sufficient strength to contain the proposed waste materials without rupturing, based on wall thickness information provided by Snyder Industries.
- Tank 303 is situated on a reinforced concrete foundation system which is capable of adequately supporting the tank and its contents under static and dynamic conditions.
- Tank 303 is located in an area with sufficient secondary containment as required by 40 CFR Ch. I, 264.193.
- Tank 303 is anchored to resist overturning when subjected to site-specific loads 2006 International Building Code level seismic events based on the analysis performed by Jaik Choi Associates.
- Tank 303 is anchored to prevent sliding when subjected to site-specific 2006 International Building Code level seismic events based on the analysis performed by Jaik Choi Associates.
- Special Inspection of the epoxy anchor bolt installation and concrete pad construction was performed as required by the International Building Code. Copies of the Special Inspection reports are attached.
- Tank 303 has been subjected to a 24-hour leak test and found to be watertight. The Tank Leakage Test results are included in the Tank Inspection Form, copy attached.
- The exterior of Tank 303's shell wall has been inspected and found to be undamaged. The Tank Shell Inspection results are included in the Tank Inspection Form, copy attached.
- The process piping discharge connections have been inspected and found to be undamaged and with no evidence of leakage. The piping connections are adequately attached to the tank to prevent displacement during an earthquake. The associated Process Piping inspection form is attached.

Tobey-Wade Consulting witnessed the tank leakage test and conducted the tank shell inspection, under my direct supervision. Special Inspections were performed by inspectors from Nortech Consultants based on anchorage requirements provided by Jaik Choi Associates.

Certification Statement

I certify under penalty of law that this report and all attachments were prepared under my direction and supervision in accordance with a system developed to assure that qualified personnel properly gather and evaluate the information submitted. Based on my inquiry of the person or persons who manage the system or those persons directly responsible for gathering the information, the information, submitted is, to the best of my knowledge and belief, true, accurate, and complete. I am aware that there are significant penalties for submitting false information, including the possibility of fines and imprisonment for knowing violations.

This report has been prepared in accordance with acceptable engineering practices and is subject to the assumptions and limitations stated in the report. Also note that this certification covers the aforementioned aspects of Tank 303 only.

Please feel free to contact me at your convenience should you have any questions relating to our findings.

Sincerely,
TOBEY-WADE CONSULTING

Terrence R. Tobey

TERRENCE R. TOBEY, P.E., S.E.
Principal Structural Engineer

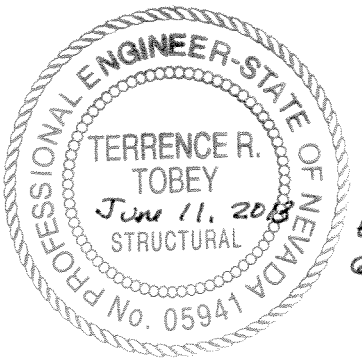

Exp.
6.30.14

NORTECH Geotechnical/Civil Consultants, Ltd.

FIELD CONSTRUCTION INSPECTION REPORT

PROJECT PSC Environmental JOB NO. 14441-28C

LOCATION 2095 Newlands Drive, Fernley, Nevada REPORT NO. 11

CONTRACTOR L & H Concrete WEEK ENDING 05-11-13

Work Description

May 9 - On site for epoxy inspection on anchor bolts (1 inch) for support plates around tanks 303. 304 and 305. Holes (54 each tank) were drilled to specified embed depth (9 inches) and were cleaned out thoroughly. I observed placement of anchor bolts and epoxy as they were installed in accordance with structural details on approved engineer sop drawings, sheet B-2497. (MSV)

NORTECH Geotechnical/Civil Consultants, Ltd.

FIELD CONSTRUCTION INSPECTION REPORT

PROJECT PSC Environmental JOB NO. 14441-28C

LOCATION 2095 Newlands Drive, Fernley, Nevada REPORT NO. 10

CONTRACTOR L & H Concrete WEEK ENDING 05-04-13

Work Description

April 29 - I inspected steel reinforcement in concrete slab for tanks 303, 304 and 305. Rebar was placed in accordance with structural details on approved plans. I was on site for concrete pour on tank slab. I cast one set of concrete cylinders and I performed one passing slump test. (MSV)

April 30 - Transported previously cast cylinders to the laboratory for proper curing and testing. (MSV)

NORTECH
GEOTECHNICAL/CIVIL CONSULTANTS, LTD.
300 Western Road, #3, Reno, NV 89506 · (775) 852-7475 FAX (775) 852-7488

REPORT OF CONCRETE CYLINDER TEST

Project Number: 14441-28C
Project: PSC Environmental
Client: Equipment Pro, Inc.
Address: 721 Parkwood Dr., Ste. Genevieve, MO 63670

Report Number: 6

Attn:

FIELD TEST CONDITIONS AND RESULTS (ASTM C31)

Date Placed: 4/29/2013
Time Sampled: 9:30 AM
Location of Sample: Tank Slab, 303, 304, 305
Supplier: American
Truck Number: 487
Mix Number: 92BW
Design Strength: 4000 psi
Time Batched: 8:50 AM
Batch Size: 10 yds.
Slump: 4 in. (ASTM C 143)
Concrete Temp: 70 °F
Water Added: 20 gal.

Ticket Number: 12001037

Time Placed: 9:30 AM

Air Content: N/A % (ASTM C 173)
Ambient Temp: inside °F
Technician: MSV

LABORATORY TEST RESULTS (ASTM C39)

Specimen	Test Date	Age	Load	Diameter	Area	Strength	Percent of Design	Type of Fracture
736	5/6/2013	7	39950	4.00	12.57	3180		1
737	5/27/2013	28	61380	4.00	12.57	4880	122%	1
738	5/27/2013	28	59820	4.00	12.57	4760	119%	1
739		0		4.00	12.57			

Remarks:

Copies to:

TYPES OF FRACTURE

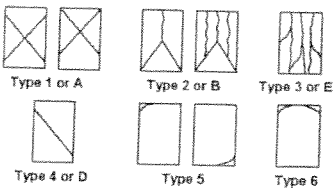

Reported by:
Kent Seegmiller
Concrete Laboratory Manager

TANK INSPECTION FORM

OWNER: Philip Services Corporation / 21 EMI
PSC Fernley Facility
2095 Newlands Drive East
Fernley, NV 89408
(775)575-2760

TANK NO.: 303, 12,500 gallon flat-bottom

TANK SHELL INSPECTION

Date Inspected: May 29, 2013

Findings: Good Condition, Few minor Scratches

TANK ANCHORAGE STRUCTURAL OBSERVATION

Type of Anchorage System: Jaik Choi Calcs/Snyder Industries Drawings

Date Inspected: May 29, 2013

# of Anchor Plates/Tie-downs: 9 Plates / 4 Tie Downs

AB Type, Diameter, Spacing and Number/plate: 1" ϕ Bolts, 6 Per Plate

Size of Anchor Plate & Contact with Tank: Per Drawing B-2468B By Snyder Industries, Contact w/ Tank

Edge Distances: 12" Min.

Special Inspection Completed? Yes

TANK LEAKAGE TEST

Date Filled: June 5, 2013 10:00 A.M. Water Level below Inspection Hatch: 34 3/4"

Date of Re-inspection: June 6, 2013 Water Level below Inspection Hatch: 34 3/4"

Shell Leakage? No / No

Leakage on Floor/Drain Pan at Manifold? No / No

INSPECTOR: Brian [signature] **DATE:** May 29, 2013

INSPECTOR: Brian [signature] **DATE:** June 6, 2013

PROCESS PIPING INSPECTION FORM

Philip Services Corporation / 21 EMI
PSC Fernley Facility
2095 Newlands Drive East
Fernley, NV 89408
(775)575-2760

Tank Number: 303

Date Inspected: May 29, 2013

Fill Line Assembly:

Number of Fill Line Assemblies: None

Description:

Discharge Line Assembly:

Number of Discharge Line Assemblies: 2 Discharge Line Assemblies

Description: The bulkhead fitting to the threaded valve connection is the only permanent piping in the discharge line assembly. There was no damage to the process piping connection or to the tank shell. No evidence of leaking found. The permanent piping is secured and stable.

INSPECTOR: _____ **DATE:** May 29, 2013

tobey wade
STRUCTURAL ENGINEERS

August 7, 2013
Project No. R405-13-13

Ms. Tracy Buono
Facility/Operations Manager
PSC FERNLEY FACILITY
2095 Newlands Drive East
Fernley, NV 89408

RE: TANK 303 CERTIFICATION

Dear Ms. Buono:

In accordance with the Fernley Facility Amended Tank Replacement Plan dated December 17, 2012, and Appendix D-6 of the pending July 2012 RECRA Permit, each new tank is required to be certified by an Independent Registered Professional Engineer (IRPE) prior to being placed into service. This letter has been prepared to document the evaluation of Tank 303 as performed by Tobey-Wade Consulting.

Background

Tank 303 is a virgin linear polyethylene tank as manufactured by Snyder Industries, Inc. and it has a 12,500 gallon capacity. Snyder Industries has provided data relative to the tank's strength.

Jaik Choi Associates conducted a stability analysis and designed anchorage for the tank. Tobey-Wade Consulting evaluated the existing foundation and designed a new reinforced concrete pad based on loads provided by Jaik Choi Associates.

Certification of the tank shell's compatibility with the proposed waste stream has been provided by others.

Findings

Based on our evaluation, the following systems are hereby certified as being in compliance with the Amended Tank Replacement plan:

- Tank 303 has sufficient strength to contain the proposed waste materials without rupturing, based on wall thickness information provided by Snyder Industries.

- Tank 303 is situated on a reinforced concrete foundation system which is capable of adequately supporting the tank and its contents under static and dynamic conditions.

- Tank 303 is located in an area with sufficient secondary containment as required by 40 CFR Ch. I, 264.193.

- Tank 303 is anchored to resist overturning when subjected to site-specific loads 2006 International Building Code level seismic events based on the analysis performed by Jaik Choi Associates.

- Tank 303 is anchored to prevent sliding when subjected to site-specific 2006 International Building Code level seismic events based on the analysis performed by Jaik Choi Associates.

- The process piping discharge connections have been inspected and found to be undamaged and with no evidence of leakage. The piping connections are adequately attached to the tank to prevent displacement during an earthquake. The associated Process Piping inspection form is attached.

- Special Inspection of the epoxy anchor bolt installation and concrete pad construction was performed as required by the International Building Code. Copies of the Special Inspection reports are attached.

- Tank 303 has been subjected to a 24-hour leak test and found to be watertight. The Tank Leakage Test results are included in the Tank Inspection Form, copy attached.

- The exterior of Tank 303's shell wall has been inspected and found to be undamaged. The Tank Shell Inspection results are included in the Tank Inspection Form, copy attached.

Tobey-Wade Consulting witnessed the tank leakage test and conducted the tank shell inspection, under my direct supervision. Special Inspections were performed by inspectors from Nortech Consultants based on anchorage requirements provided by Jaik Choi Associates.

Certification Statement

I certify under penalty of law that this report and all attachments were prepared under my direction and supervision in accordance with a system developed to assure that qualified personnel properly gather and evaluate the information submitted. Based on my inquiry of the person or persons who manage the system or those persons directly responsible for gathering the information, the information, submitted is, to the best of my knowledge and belief, true, accurate, and complete. I am aware that there are significant penalties for submitting false information, including the possibility of fines and imprisonment for knowing violations.

This report has been prepared in accordance with accepted engineering practices and is subject to the assumptions and limitations stated in the report. Also note that this certification covers the aforementioned aspects of Tank 303 only.

Please feel free to contact me at your convenience should you have any questions relating to our findings.

Sincerely,
TOBEY-WADE CONSULTING

Terrence R. Tobey

TERRENCE R. TOBEY, P.E., S.E.
Principal Structural Engineer

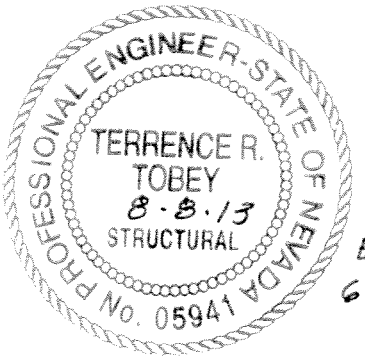

Exp.
6·30·14

NORTECH Geotechnical/Civil Consultants, Ltd.

FIELD CONSTRUCTION INSPECTION REPORT

PROJECT PSC Environmental JOB NO. 14441-28C

LOCATION 2095 Newlands Drive, Fernley, Nevada REPORT NO. 11

CONTRACTOR L & H Concrete WEEK ENDING 05-11-13

Work Description

May 9 - On site for epoxy inspection on anchor bolts (1 inch) for support plates around tanks 303. 304 and 305. Holes (54 each tank) were drilled to specified embed depth (9 inches) and were cleaned out thoroughly. I observed placement of anchor bolts and epoxy as they were installed in accordance with structural details on approved engineer sop drawings, sheet B-2497. (MSV)

NORTECH Geotechnical/Civil Consultants, Ltd.

FIELD CONSTRUCTION INSPECTION REPORT

PROJECT PSC Environmental JOB NO. 14441-28C

LOCATION 2095 Newlands Drive, Fernley, Nevada REPORT NO. 10

CONTRACTOR L & H Concrete WEEK ENDING 05-04-13

Work Description

April 29 - I inspected steel reinforcement in concrete slab for tanks 303, 304 and 305. Rebar was placed in accordance with structural details on approved plans. I was on site for concrete pour on tank slab. I cast one set of concrete cylinders and I performed one passing slump test. (MSV)

April 30 - Transported previously cast cylinders to the laboratory for proper curing and testing. (MSV)

NORTECH
GEOTECHNICAL/CIVIL CONSULTANTS, LTD.
300 Western Road, #3, Reno, NV 89506 · (775) 852-7475 FAX (775) 852-7488

REPORT OF CONCRETE CYLINDER TEST

Project Number: 14441-28C
Project: PSC Environmental
Client: Equipment Pro, Inc.
Address: 721 Parkwood Dr., Ste. Genevieve, MO 63670

Report Number: 6

Attn:

FIELD TEST CONDITIONS AND RESULTS (ASTM C31)

Date Placed: 4/29/2013
Time Sampled: 9:30 AM
Location of Sample: Tank Slab, 303, 304, 305
Supplier: American
Truck Number: 487
Mix Number: 92BW
Design Strength: 4000 psi
Time Batched: 8:50 AM
Batch Size: 10 yds.
Slump: 4 in. (ASTM C 143)
Concrete Temp: 70 °F
Water Added: 20 gal.

Ticket Number: 12001037

Time Placed: 9:30 AM

Air Content: N/A % (ASTM C 173)
Ambient Temp: inside °F
Technician: MSV

LABORATORY TEST RESULTS (ASTM C39)

Specimen	Test Date	Age	Load	Diameter	Area	Strength	Percent of Design	Type of Fracture
736	5/6/2013	7	39950	4.00	12.57	3180		1
737	5/27/2013	28	61380	4.00	12.57	4880	122%	1
738	5/27/2013	28	59820	4.00	12.57	4760	119%	1
739		0		4.00	12.57			

Remarks:

TYPES OF FRACTURE

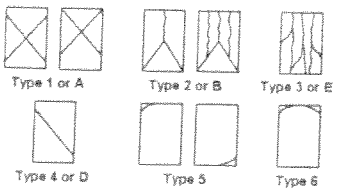

Copies to:

Reported by:
Kent Seegmiller
Concrete Laboratory Manager

TANK INSPECTION FORM

OWNER: Philip Services Corporation / 21 EMI
PSC Fernley Facility
2095 Newlands Drive East
Fernley, NV 89408
(775)575-2760

TANK NO.: 303, 12,500 gallon flat-bottom

TANK SHELL INSPECTION

Date Inspected: May 29, 2013

Findings: Good Condition, Few minor Scratches

TANK ANCHORAGE STRUCTURAL OBSERVATION

Type of Anchorage System: Jaik Choi Calcs/Snyder Industries Drawings

Date Inspected: May 29, 2013

# of Anchor Plates/Tie-downs: 9 Plates / 4 Tie Downs

AB Type, Diameter, Spacing and Number/plate: 1" ø Bolts, 6 Per Plate

Size of Anchor Plate & Contact with Tank: Per Drawing B-2468B By Snyder Industries, Contact w/ Tank

Edge Distances: 12" Min.

Special Inspection Completed? Yes

TANK LEAKAGE TEST

Date Filled: June 5, 2013 10:00 A.M. Water Level below Inspection Hatch: 34 3/4"

Date of Re-inspection: June 6, 2013 Water Level below Inspection Hatch: 34 3/4"

Shell Leakage? No / No

Leakage on Floor/Drain Pan at Manifold? No / No

INSPECTOR: Brian Gill DATE: May 29, 2013

INSPECTOR: Brian Gill DATE: June 6, 2013

PROCESS PIPING INSPECTION FORM

Philip Services Corporation / 21 EMI
PSC Fernley Facility
2095 Newlands Drive East
Fernley, NV 89408
(775)575-2760

Tank Number: 303

Date Inspected: May 29, 2013

Fill Line Assembly:

Number of Fill Line Assemblies: None

Description:

Discharge Line Assembly:

Number of Discharge Line Assemblies: 2 Discharge Line Assemblies

Description: The bulkhead fitting to the threaded valve connection is the only permanent piping in the discharge line assembly. There was no damage to the process piping connection or to the tank shell. No evidence of leaking found. The permanent piping is secured and stable.

INSPECTOR: Brandy [signature] DATE: May 29, 2013

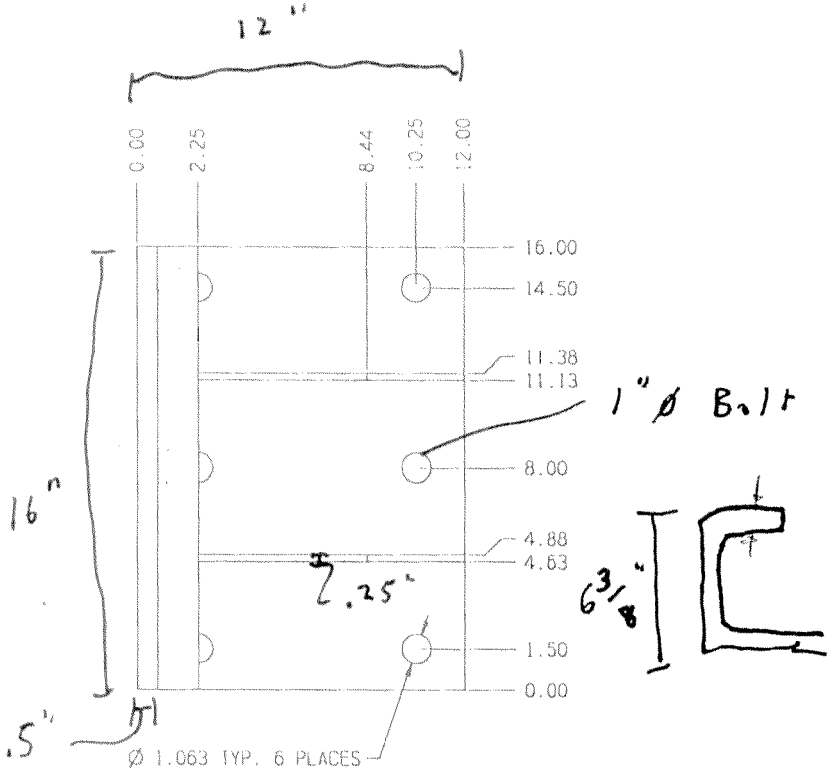

NOTES:
1. MATERIAL ASTM A-36 OR EQUAL. PLATE 1/4 AND 3/8" THICK.
2. HOT DIP GALVANIZE THE PART PER ASTM A-123-89.
3. PART SHOWN IS MADE WITH A BENT PLATE. BEND MUST BE PERPENDICULAR TO THE PLATE GRAIN.
4. DEBUR ALL EDGES.
5. CHAMFER OR RADIUS THE 1-1/4" HOLE ON THE VERTICAL PLATE 1/32".
6. NO BURS OR SHARP EDGES ALLOWED ON THE FRONT FACE (6.375" X 16" AREA) OF THE WELDMENT.
7. INSPECT THE POST GALVANIZED PART FOR DRIPS AND OTHER IRREGULARITIES THAT WOULD INTERFER WITH THE HOLES OR CAUSE IRREGULAR SURFACES ON THE FRONT FACE OF THE WELDMENT. GRIND/SAND THESE AREAS SMOOTH. TOUCH UP WITH BRIGHT (ALUMINIZED) COLD GALVANIZED PAINT IF NECESSARY.

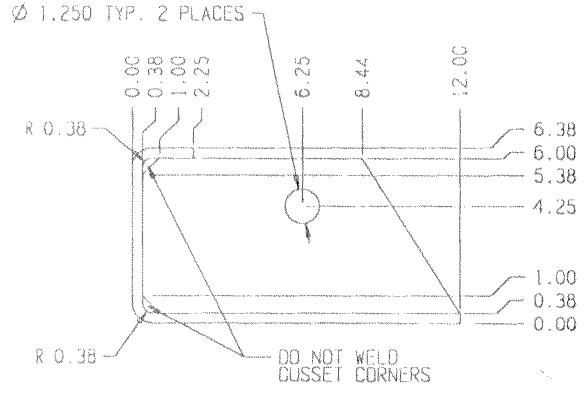

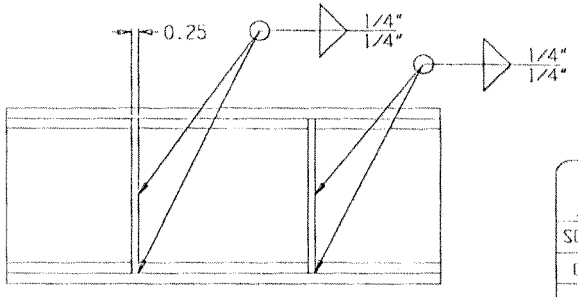

Anchor Plate for 6,500 x 120 (1.5 SG)
** 4 required for the 6,500 (1.5 SG)
Anchor Plate for 12,500 x 142 (both 1.5 & 1.9 SG)
** 8 required for the 12,500 (1.5 & 1.9 SG)

SNYDER INDUSTRIES INC.
LINCOLN, NE 68504 PHONE:(402) 467-5221 FAX:(402) 467-3247

SCALE: NTS	SII P/N: 33900408	DRAWN BY: N.L.E.
DATE: 4/22/05		REVISED: 12/14/0

GALVANIZED STEEL SEISMIC ANCHOR PLATE - 6 BOLT STANDARD VERSION

TOLERANCES UNLESS OTHERWISE SPECIFIED: FRACTIONAL: ±1/32"; ANGULAR: ±1° DECIMAL: .X = ±0.100"; .XX = ±0.030"; .XXX = ±0.010"	DRAWING NUMBER B-2468B

INFO ONLY

Tank Data Sheet

RCRA Regulated? YES

Tank Location: Dewatering Area

Tank Name: Post-Treatment Tank

Tank Numbers: 303-306

Process Description: Storage/Settling of Post-Treatment Effluent

Vessel Fluid: Neutralized/Treated Liquids w/Treatment Chemical Residuals

Specific Gravity: <1.50 Freeboard At Working Vol (ft^3): 33.42

Normal Operating Pressure: ATMOSPHERIC Temperature (F°) AMBIENT

	Material	Thickness	Type
Bottom	Virgin linear polyethylene	1.4" avg.	Flat
Shell	Virgin linear polyethylene	1.05" avg.	CYLINDRICAL-VERTICAL
Roof	Virgin linear polyethylene	0.45" avg.	dome

Working Volume (USG): 12,500 gallons Insulation: NONE

Nominal Volume (USG): 12,750 gallons Method of Construction: rotational molding process

Tank O.D. (ft): 11' 10" Tank Height or Length (ft): 16' 6"

Design Code Used: IBC 2006 AISC 13th Edition Date In Service: PLANNED TANKS

Anchorage: seismic restraints bolted to concrete. Anchorage designs per 2006 IBC.

Connections:

Item No:	Size (In.)	Gasket	Description	Interior Coating:	none
A	24		PE Threaded-vented manway w/22" access	Exterior Coating:	none
B	3		S.U.M.O w/ss insert, viton o-rings & PVC adapter	Tank Mfger:	Snyder Industries Inc.
			ASM 3" CPVC SUMO adapter	Remarks:	

ALL TANKS
PO #12-986

TANK 2 OF 4

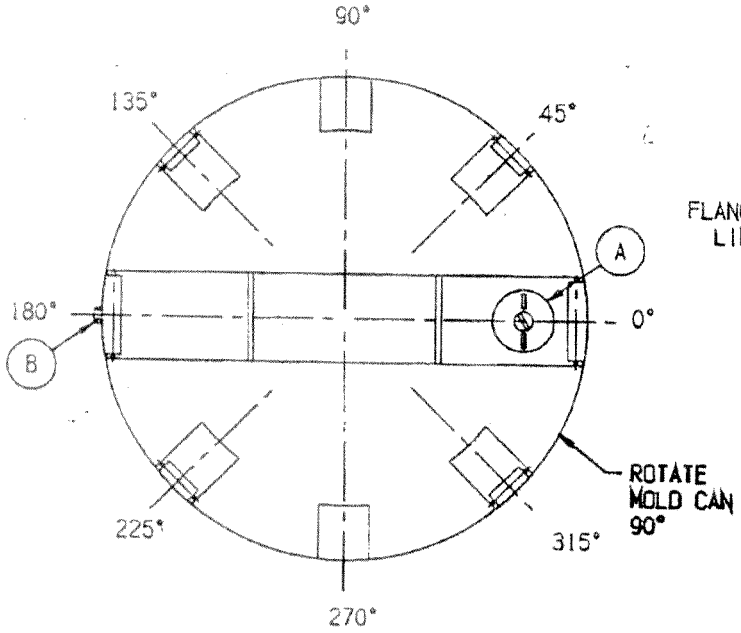

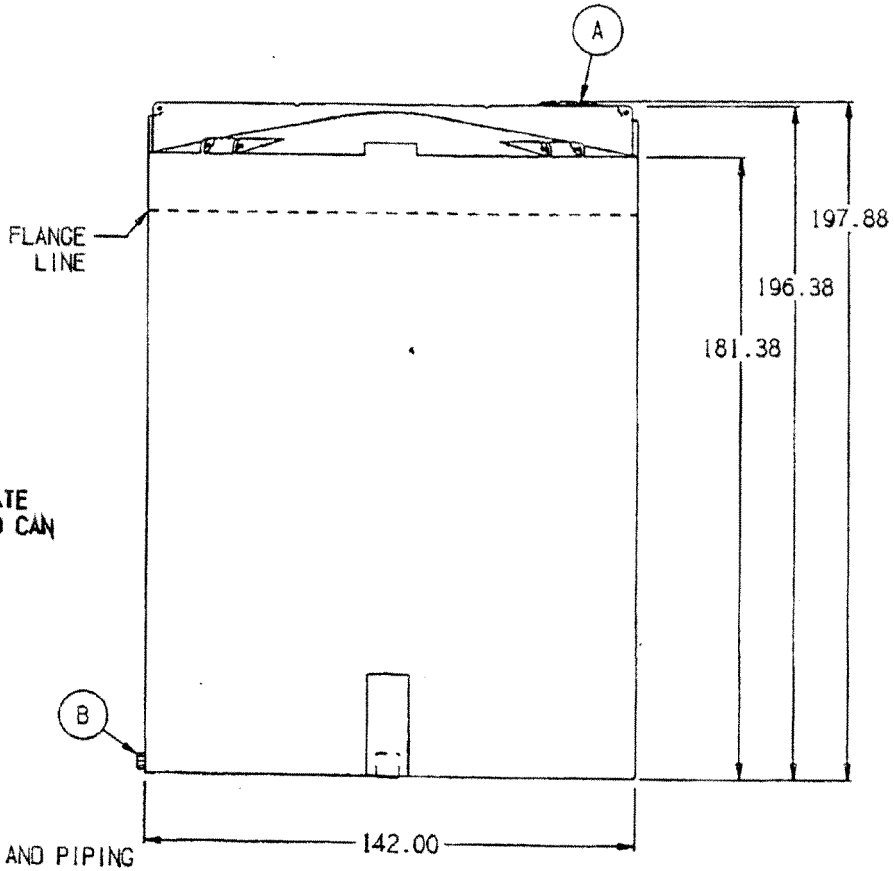

NOTE:
ADEQUATE CLEARANCE MUST BE ALLOWED FOR S.U.M.O. FITTING AND PIPING ACCESSORIES. A NOTCH IN THE TANK SUPPORT PAD MAY BE ADVISABLE. ALL EXTERNAL PIPING MUST BE INDEPENDENTLY SUPPORTED.

A. 24" PE THREADED-VENTED MANWAY W/22" ACCESS [P/N 34700352]
B. 3" S.U.M.O. W/SS INSERT, VITON O-RINGS & PVC ADAPTER [P/N 34700299]
B. ASM 3" CPVC SUMO ADAPTER [P/N 35900511]

* BASE FITTINGS TO BE LEFT INSTALLED AT TIME OF SHIPMENT PER SII PROCEDURE
* Consult Snyder's Guidelines for Use and Installation prior to delivery. Available on-line at www.snydernet.com

ALL DIMENSIONS, DESIGNS, AND INFORMATION ON THIS PRINT MUST BE CONSIDERED PROPRIETARY TO SNYDER INDUSTRIES, INC. AND MAY NOT BE USED, COPIED, OR DISTRIBUTED WITHOUT WRITTEN PERMISSION OF AN OFFICER (OR HIS AGENT) OF THE FIRM.

APPROVED: [signature] 12/21/12

SIGNATURE: _____ DATE: ____
DRAWING NOT VALID UNLESS SIGNED
(all dimensions in inches)

12,500 GALLON FLAT BOTTOM TANK

© SNYDER INDUSTRIES, INC., 2012

PART #: [signature] 12/19
TANK: 5350011N97401
HDLPE/NATURAL/1.5 SG
ROTATE MOLD CAN 90°
REF#: 29881 12/19/12

SNYDER INDUSTRIES INC.

13012750 70 OK to cut DP 1/18/13

INSPECTION CHECKLIST FOR INDUSTRIAL TANKS

Work Order Number: 352238 SO Number: 146963 Order Qty: 2 of 3 Part Number I2535003016 20
Tank Description: Size 12500V SUMO
Specific Gravity 1.5 Material HDINAT Serial Number 1303276281

Circle YES or NO or NA Below as Required

Audit: (Yes) No If yes, attach audit. Correct Audit (600 psi) 750 psi Other _____

Hydro test: Yes (No) Percent Gel test 65% minimum: _____ or NA

Drop dart: Pass Fail NH/NF

Sumo Test: Pass Fail NA What psi 60 psi How long 20 min

IF THIS IS A NO HOLES NO FITTING TANK SKIP SECTIONS A & B. NHNF: Yes

SECTION A - FITTINGS – SPECIFICATION:

Note: Proper application and installation of fittings are critical to the success of an SII tank. Please follow this procedure.

Is the application correct? Circle YES or NO or NA

- Are we using the correct gaskets per the order? Viton or Epdm
- Is the material correct for encapsulated bolts? Stainless (natural) Hastaloy (yellow) Titanium (green)
- Do the pvc fitting U-vents, siphon tubes, etc. have enough glue? (see evidence in the joints) . . Yes No NA

SECTION B - FITTINGS – LOCATION:

- Fitting layout per cut sheet correct? . . . . . Yes No

If no, explain discrepancies _____

Are the hole sizes correct for the fittings? . . . . . Yes No

Are the gasket areas smooth and even thicknesses on the inside of the tank? (no bumps) . . . . . Yes No

Have the fittings been torque to 1/3 compression on the gasket? . . . . . Yes No

If no, explain (hand tight), etc. _____

SECTION C - EXTRA'S – SUPPLEMENTAL HARDWARE: (includes ladders, down tubes, sight gages, additional plumbing, etc.)

The following have been installed and found to fit and function properly.

Level sensor Y or N Settings: Tank height _____ Fluid level _____ Gallons per inch _____
Down pipe Y or N Welds tested with soft mallet Y or N

Other Items

items Boxed/pic taken AV 3-21-13
One Box to ship inside tank AV 3-21-13
Box Placed IN TANK (Pic)
TANK Washed INSIDE/OUT (Pic)
AV 3-25-13

Final Buyoff: Production _____ Quality _____

(I have checked the above mentioned tank and documentation and have found all to be acceptable.)

ALL TANKS LLC
10-8512

TANKS 1-3

ROTATE CAN 180°

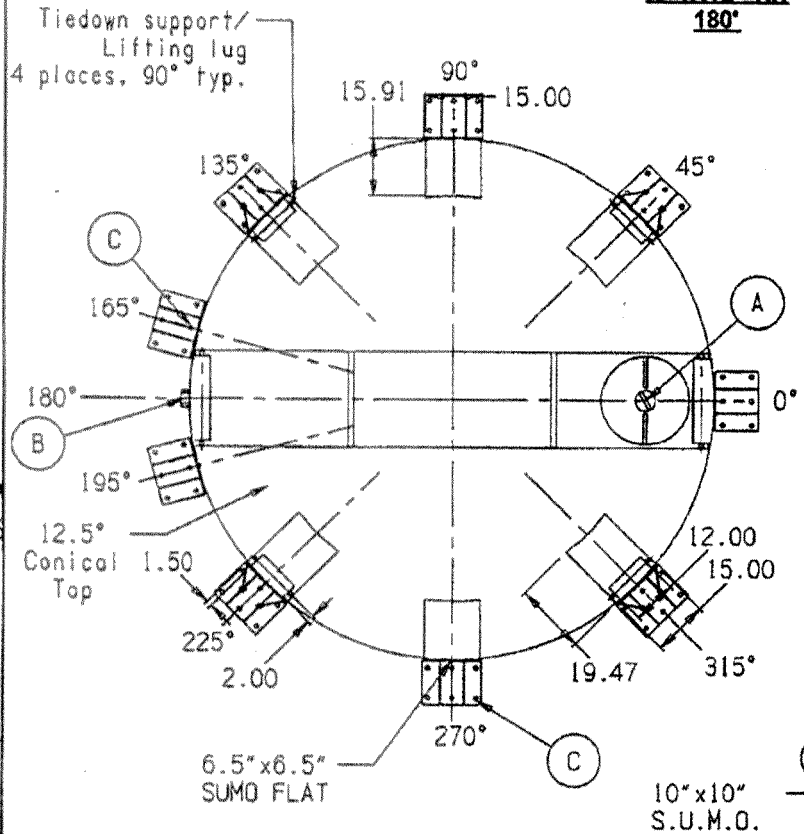

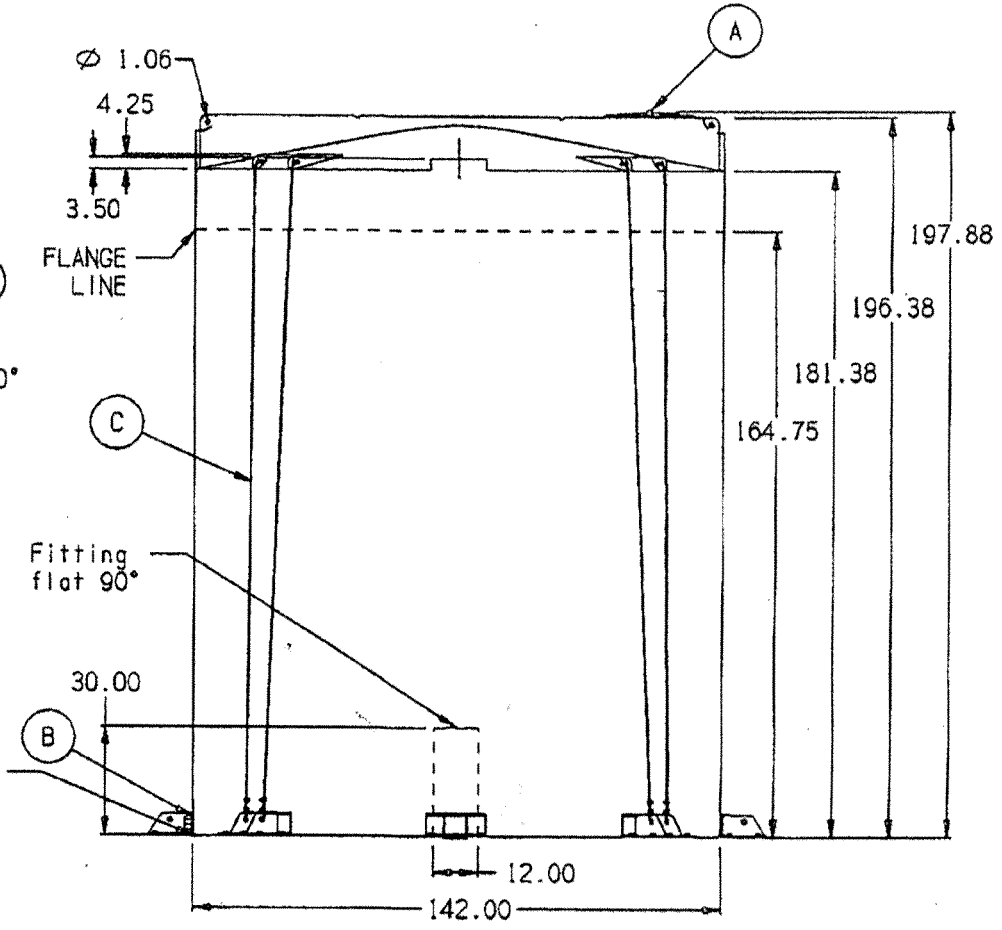

1303276281

NOTES:

ALL EXTERNAL PIPING MUST BE INDEPENDENTLY SUPPORTED

A. 24" PE THREADED-VENTED MANWAY W/22" ACCESS [P/N 34700352]
B. 3" S.U.M.O. W/SS INSERT, VITON O-RINGS & PVC ADAPTER [P/N 34700299]
B. ASM 3" CPVC SUMO ADAPTER [P/N 35900511]
C. SEISMIC GS CABLE TIE-DOWN SYSTEM [P/N 34700173]
C. GALVANIZED STEEL SEISMIC ANCHOR PLATE - 6 BOLT STANDARD VERSION [P/N 33900408]

* BASE FITTINGS TO BE LEFT INSTALLED AT TIME OF SHIPMENT PER SII PROCEDURE
* Consult Snyder's Guidelines for Use and Installation prior to delivery. Available on-line at www.snydernet.com

ALL DIMENSIONS, DESIGNS, AND INFORMATION ON THIS PRINT MUST BE CONSIDERED PROPRIETARY TO SNYDER INDUSTRIES, INC. AND MAY NOT BE USED, COPIED, OR DISTRIBUTED WITHOUT WRITTEN PERMISSION OF AN OFFICER (OR HIS AGENT) OF THE FIRM.

APPROVED: 2/24/13
SIGNATURE: _____ DATE: ____
DRAWING NOT VALID UNLESS SIGNED
(all dimensions in inches)

SNYDER INDUSTRIES INC.

12,500 GALLON FLAT BOTTOM TANK

© SNYDER INDUSTRIES, INC., 2012

PART #: PRIMARY: 53500I1N97401
HDLPE/NATURAL/1.5 SG
REF#: 30162 02/22/13

SII "12500V" 142" G-SERIES VERTICAL, CONE TOP TANK

16.36 OVER ALL TANK HEIGHT (FEET)
600 TENSILE STRENGTH (PSI)
15.11 SIDE WALL HEIGTH (FEET)
142 DIAMETER (INCHES)
1.5 SPECIFIC GRAVITY
0.45 AVG. THICKNESS TOP (INCHES)
BOTTOM THICKNESS (INCHES)
FEET FROM OUT SIDE EDGE
0.7 0.5 " #
0.6 1 " #
0.5 2 " #
0.4 CENTER #

15 DOME HEIGHT (INCHES)
574.01 CAP. IN DOME TOP
12779.2 MIN. TANK CAP.(GAL.)
2566.15 CHARGE WEIGHT (LBS.)
_____ OVEN CYCLE TIME (MIN)
_____ OVEN TEMP. (DEG."F")
_____ DELAY (MIN.)
_____ COOLING AIR (MIN.)
_____ COOLING WATER (MIN.)
_____ COOLING AIR (MIN)
_____ OVEN DAMPER
_____ MACHINE/ARM
_____ ROTATION

American Process

SO 146963

DIST.FROM BOTTOM(FT)	DESIGN WALL		SIDE THICKNESS CUTOUT	9.29	18.59	27.88 (FEET)
15	0.30	# #				
14	0.30	# #				
13	0.30	# #				
12	0.30	# #				
11	0.32	# #				
10	0.39	# #				
9	0.47	# #				
8	0.55	# #				
7	0.62	# #				
6	0.70	# #				
5	0.78	# #		971		
4	0.85	# #		769		923
3	0.93	# #		996		930
2	1.01	# #		1103		985
1	1.08	# #		1299		101
0.5	1.12	# #				328

DATE: 3-21-13
SERIAL #: 13032762 BL
POWDER TYPE: EXT89
INSTRUMENT CALIBRATED TO
CUTOUT:
LOT #:
PART COLOR: NAT
PIGMENT WEIGHT (GRAMS):
GEL %:
DROP DART WEIGHT:
DROP DART HEIGHT:
DROP DART TEMPERATURE:
DROP DART RESULTS:
Q.A. PERSONNEL:
COMMENTS:

Top View

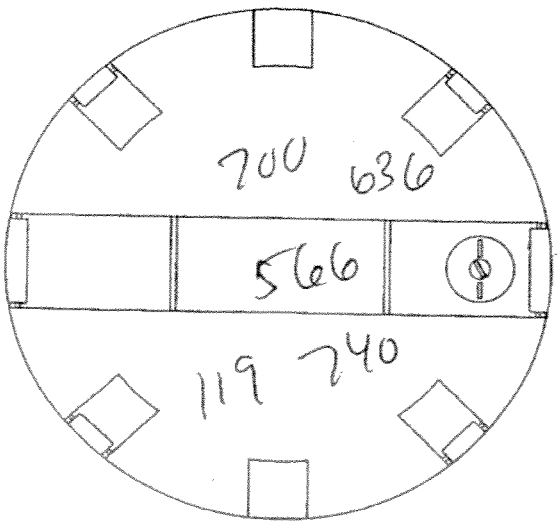

Bottom View

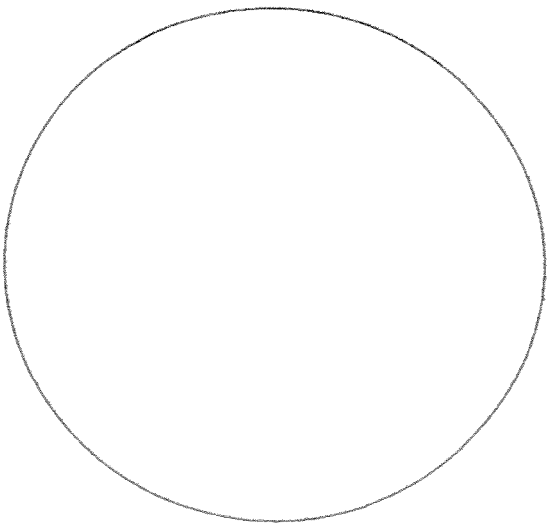

tobey wade
STRUCTURAL ENGINEERS

June 4, 2013
Project No. R405-08-13

Ms. Tracy Buono
Facility/Operations Manager
PSC FERNLEY FACILITY
2095 Newlands Drive East
Fernley, NV 89408

RE: TANK 304 INTERIM CERTIFICATION

Dear Ms. Buono:

In accordance with the Fernley Facility Amended Tank Replacement Plan dated December 17, 2012, and Appendix D-6 of the pending July 2012 RECRA Permit, each new tank is required to be certified by an Independent Registered Professional Engineer (IRPE) prior to being placed into service. This letter has been prepared to document the evaluation of Tank 304 as performed by Tobey-Wade Consulting.

It should be noted that Tank 304 currently has permanent bulkhead fittings with valves for connection of temporary discharge lines. The permanent process piping servicing Tank 304 will be installed in Phase 3 as outlined in the above-referenced documents. Accordingly, this certification is being provided as an interim certification. Final certification of Tank 304 will be provided after the permanent piping and all other associated permanent systems have been installed and inspected.

Background

Tank 304 is a virgin linear polyethylene tank as manufactured by Snyder Industries, Inc. and it has a 12,500 gallon capacity. Snyder Industries has provided data relative to the tank's strength.

Jaik Choi Associates conducted a stability analysis and designed anchorage for the tank. Tobey-Wade Consulting evaluated the existing foundation and designed a new reinforced concrete pad based on loads provided by Jaik Choi Associates.

Certification of the tank shell's compatibility with the proposed waste stream has been provided by others.

Findings

Based on our evaluation, the following systems are hereby certified as being in compliance with the Amended Tank Replacement plan:

- Tank 304 has sufficient strength to contain the proposed waste materials without rupturing, based on wall thickness information provided by Snyder Industries.
- Tank 304 is situated on a reinforced concrete foundation system which is capable of adequately supporting the tank and its contents under static and dynamic conditions.
- Tank 304 is located in an area with sufficient secondary containment as required by 40 CFR Ch. I, 264.193.
- Tank 304 is anchored to resist overturning when subjected to site-specific loads 2006 International Building Code level seismic events based on the analysis performed by Jaik Choi Associates.
- Tank 304 is anchored to prevent sliding when subjected to site-specific 2006 International Building Code level seismic events based on the analysis performed by Jaik Choi Associates.
- The process piping discharge connections have been inspected and found to be undamaged and with no evidence of leakage. The piping connections are adequately attached to the tank to prevent displacement during an earthquake. The associated Process Piping inspection form is attached.
- Special Inspection of the epoxy anchor bolt installation and concrete pad construction was performed as required by the International Building Code. Copies of the Special Inspection reports are attached.
- Tank 304 has been subjected to a 24-hour leak test and found to be watertight. The Tank Leakage Test results are included in the Tank Inspection Form, copy attached.
- The exterior of Tank 304's shell wall has been inspected and found to be undamaged. The Tank Shell Inspection results are included in the Tank Inspection Form, copy attached.

Tobey-Wade Consulting witnessed the tank leakage test and conducted the tank shell inspection, under my direct supervision. Special Inspections were performed by inspectors from Nortech Consultants based on anchorage requirements provided by Jaik Choi Associates.

Certification Statement

I certify under penalty of law that this report and all attachments were prepared under my direction and supervision in accordance with a system developed to assure that qualified personnel properly gather and evaluate the information submitted. Based on my inquiry of the person or persons who manage the system or those persons directly responsible for gathering the information, the information, submitted is, to the best of my knowledge and belief, true, accurate, and complete. I am aware that there are significant penalties for submitting false information, including the possibility of fines and imprisonment for knowing violations.

This report has been prepared in accordance with acceptable engineering practices and is subject to the assumptions and limitations stated in the report. Also note that this certification covers the aforementioned aspects of Tank 304 only.

Please feel free to contact me at your convenience should you have any questions relating to our findings.

Sincerely,
TOBEY-WADE CONSULTING

Terrence R. Tobey

TERRENCE R. TOBEY, P.E., S.E.
Principal Structural Engineer

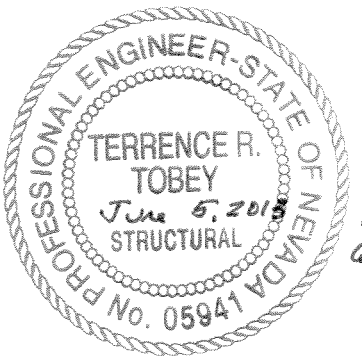

TANK INSPECTION FORM

OWNER: Philip Services Corporation / 21 EMI
PSC Fernley Facility
2095 Newlands Drive East
Fernley, NV 89408
(775)575-2760

TANK NO.: 304, 12,500 gallon flat-bottom

TANK SHELL INSPECTION

Date Inspected: May 29, 2013

Findings: Minor Scratches Near Wall, Overall Good Condition

TANK ANCHORAGE STRUCTURAL OBSERVATION

Type of Anchorage System: Jaik Choi Calcs/Snyder Industries Drawings

Date Inspected: May 29, 2013

# of Anchor Plates/Tie-downs: 9 Plates / 4 Tie Downs

AB Type, Diameter, Spacing and Number/plate: 1" ø Bolts, 6 Per Plate

Size of Anchor Plate & Contact with Tank: Per Drawing B-2468B By Snyder Industries. Contact w/ Tank

Edge Distances: 12" Min.

Special Inspection Completed? Yes

TANK LEAKAGE TEST

Date Filled: June 3, 2013 9:00 AM Water Level below Inspection Hatch: 33"

Date of Re-inspection: June 4, 2013 Water Level below Inspection Hatch: 33"

Shell Leakage? No / No

Leakage on Floor/Drain Pan at Manifold? NO / NO

INSPECTOR: Brian Gr DATE: May 29, 2013

INSPECTOR: Brian Gr DATE: June 4, 2013

PROCESS PIPING INSPECTION FORM

Philip Services Corporation / 21 EMI
PSC Fernley Facility
2095 Newlands Drive East
Fernley, NV 89408
(775)575-2760

Tank Number: 304

Date Inspected: May 29, 2013

Fill Line Assembly:

Number of Fill Line Assemblies: None

Description:

Discharge Line Assembly:

Number of Discharge Line Assemblies: 2 Discharge Line Assemblies

Description: The bulkhead fitting to the threaded valve connection is the only permanent piping in the discharge line assembly. There was no damage to the process piping connection or to the tank shell. No evidence of leaking found. The permanent piping is secured and stable.

INSPECTOR: Brian [signature] **DATE:** May 29, 2013

NORTECH Geotechnical/Civil Consultants, Ltd.

FIELD CONSTRUCTION INSPECTION REPORT

PROJECT PSC Environmental JOB NO. 14441-28C

LOCATION 2095 Newlands Drive, Fernley, Nevada REPORT NO. 11

CONTRACTOR L & H Concrete WEEK ENDING 05-11-13

Work Description

May 9 - On site for epoxy inspection on anchor bolts (1 inch) for support plates around tanks 303. 304 and 305. Holes (54 each tank) were drilled to specified embed depth (9 inches) and were cleaned out thoroughly. I observed placement of anchor bolts and epoxy as they were installed in accordance with structural details on approved engineer sop drawings, sheet B-2497. (MSV)

NORTECH Geotechnical/Civil Consultants, Ltd.

FIELD CONSTRUCTION INSPECTION REPORT

PROJECT PSC Environmental JOB NO. 14441-28C

LOCATION 2095 Newlands Drive, Fernley, Nevada REPORT NO. 10

CONTRACTOR L & H Concrete WEEK ENDING 05-04-13

Work Description

April 29 - I inspected steel reinforcement in concrete slab for tanks 303, 304 and 305. Rebar was placed in accordance with structural details on approved plans. I was on site for concrete pour on tank slab. I cast one set of concrete cylinders and I performed one passing slump test. (MSV)

April 30 - Transported previously cast cylinders to the laboratory for proper curing and testing. (MSV)

NORTECH
GEOTECHNICAL/CIVIL CONSULTANTS, LTD.
300 Western Road, #3, Reno, NV 89506 · (775) 852-7475 FAX (775) 852-7488

REPORT OF CONCRETE CYLINDER TEST

Project Number: 14441-28C
Report Number: 6
Project: PSC Environmental
Client: Equipment Pro, Inc.
Address: 721 Parkwood Dr., Ste. Genevieve, MO 63670

Attn:

FIELD TEST CONDITIONS AND RESULTS (ASTM C31)

Date Placed: 4/29/2013
Time Sampled: 9:30 AM
Location of Sample: Tank Slab, 303, 304, 305
Supplier: American
Truck Number: 487
Ticket Number: 12001037
Mix Number: 92BW
Design Strength: 4000 psi
Time Batched: 8:50 AM
Time Placed: 9:30 AM
Batch Size: 10 yds.
Slump: 4 in. (ASTM C 143)
Air Content: N/A % (ASTM C 173)
Concrete Temp: 70 °F
Ambient Temp: inside °F
Water Added: 20 gal.
Technician: MSV

LABORATORY TEST RESULTS (ASTM C39)

Specimen	Test Date	Age	Load	Diameter	Area	Strength	Percent of Design	Type of Fracture
736	5/6/2013	7	39950	4.00	12.57	3180		1
737	5/27/2013	28	61380	4.00	12.57	4880	122%	1
738	5/27/2013	28	59820	4.00	12.57	4760	119%	1
739		0		4.00	12.57			

Remarks:

TYPES OF FRACTURE

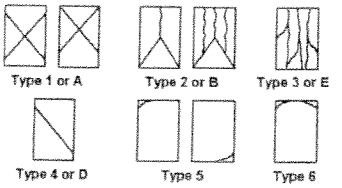

Copies to:

Reported by:
Kent Seegmiller
Concrete Laboratory Manager

tobey wade
STRUCTURAL ENGINEERS

August 7, 2013
Project No. R405-13-13

Ms. Tracy Buono
Facility/Operations Manager
PSC FERNLEY FACILITY
2095 Newlands Drive East
Fernley, NV 89408

RE: TANK 304 CERTIFICATION

Dear Ms. Buono:

In accordance with the Fernley Facility Amended Tank Replacement Plan dated December 17, 2012, and Appendix D-6 of the pending July 2012 RECRA Permit, each new tank is required to be certified by an Independent Registered Professional Engineer (IRPE) prior to being placed into service. This letter has been prepared to document the evaluation of Tank 304 as performed by Tobey-Wade Consulting.

Background

Tank 304 is a virgin linear polyethylene tank as manufactured by Snyder Industries, Inc. and it has a 12,500 gallon capacity. Snyder Industries has provided data relative to the tank's strength.

Jaik Choi Associates conducted a stability analysis and designed anchorage for the tank. Tobey-Wade Consulting evaluated the existing foundation and designed a new reinforced concrete pad based on loads provided by Jaik Choi Associates.

Certification of the tank shell's compatibility with the proposed waste stream has been provided by others.

Findings

Based on our evaluation, the following systems are hereby certified as being in compliance with the Amended Tank Replacement plan:

- Tank 304 has sufficient strength to contain the proposed waste materials without rupturing, based on wall thickness information provided by Snyder Industries.

- Tank 304 is situated on a reinforced concrete foundation system which is capable of adequately supporting the tank and its contents under static and dynamic conditions.

- Tank 304 is located in an area with sufficient secondary containment as required by 40 CFR Ch. I, 264.193.

- Tank 304 is anchored to resist overturning when subjected to site-specific loads 2006 International Building Code level seismic events based on the analysis performed by Jaik Choi Associates.

- Tank 304 is anchored to prevent sliding when subjected to site-specific 2006 International Building Code level seismic events based on the analysis performed by Jaik Choi Associates.

- The process piping discharge connections have been inspected and found to be undamaged and with no evidence of leakage. The piping connections are adequately attached to the tank to prevent displacement during an earthquake. The associated Process Piping inspection form is attached.

- Special Inspection of the epoxy anchor bolt installation and concrete pad construction was performed as required by the International Building Code. Copies of the Special Inspection reports are attached.

- Tank 304 has been subjected to a 24-hour leak test and found to be watertight. The Tank Leakage Test results are included in the Tank Inspection Form, copy attached.

- The exterior of Tank 304's shell wall has been inspected and found to be undamaged. The Tank Shell Inspection results are included in the Tank Inspection Form, copy attached.

Tobey-Wade Consulting witnessed the tank leakage test and conducted the tank shell inspection, under my direct supervision. Special Inspections were performed by inspectors from Nortech Consultants based on anchorage requirements provided by Jaik Choi Associates.

Certification Statement

I certify under penalty of law that this report and all attachments were prepared under my direction and supervision in accordance with a system developed to assure that qualified personnel properly gather and evaluate the information submitted. Based on my inquiry of the person or persons who manage the system or those persons directly responsible for gathering the information, the information, submitted is, to the best of my knowledge and belief, true, accurate, and complete. I am aware that there are significant penalties for submitting false information, including the possibility of fines and imprisonment for knowing violations.

This report has been prepared in accordance with accepted engineering practices and is subject to the assumptions and limitations stated in the report. Also note that this certification covers the aforementioned aspects of Tank 304 only.

Please feel free to contact me at your convenience should you have any questions relating to our findings.

Sincerely,
TOBEY-WADE CONSULTING

Terrence R. Tobey

TERRENCE R. TOBEY, P.E., S.E.
Principal Structural Engineer

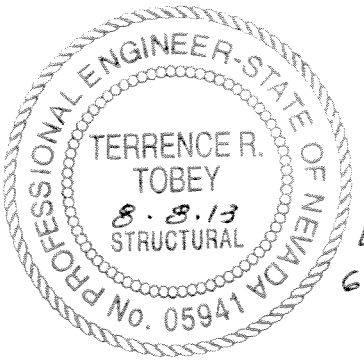

Exp.
6.30.14

NORTECH Geotechnical/Civil Consultants, Ltd.

FIELD CONSTRUCTION INSPECTION REPORT

PROJECT PSC Environmental JOB NO. 14441-28C

LOCATION 2095 Newlands Drive, Fernley, Nevada REPORT NO. 11

CONTRACTOR L & H Concrete WEEK ENDING 05-11-13

Work Description

May 9 - On site for epoxy inspection on anchor bolts (1 inch) for support plates around tanks 303. 304 and 305. Holes (54 each tank) were drilled to specified embed depth (9 inches) and were cleaned out thoroughly. I observed placement of anchor bolts and epoxy as they were installed in accordance with structural details on approved engineer sop drawings, sheet B-2497. (MSV)

TANK INSPECTION FORM

OWNER: Philip Services Corporation / 21 EMI
PSC Fernley Facility
2095 Newlands Drive East
Fernley, NV 89408
(775)575-2760

TANK NO.: 304, 12,500 gallon flat-bottom

TANK SHELL INSPECTION

Date Inspected: May 29, 2013

Findings: Minor Scratches Near Wall, Overall Good Condition

TANK ANCHORAGE STRUCTURAL OBSERVATION

Type of Anchorage System: Jaik Choi Calcs/Snyder Industries Drawings

Date Inspected: May 29, 2013

# of Anchor Plates/Tie-downs: 9 Plates / 4 Tie Downs

AB Type, Diameter, Spacing and Number/plate: 1" ø Bolts, 6 Per Plate

Size of Anchor Plate & Contact with Tank: Per Drawing B-2468B By Snyder Industries. Contact w/ Tank

Edge Distances: 12" Min.

Special Inspection Completed? Yes

TANK LEAKAGE TEST

Date Filled: June 3, 2013 9:00 AM Water Level below Inspection Hatch: 33"

Date of Re-inspection: June 4, 2013 Water Level below Inspection Hatch: 33"

Shell Leakage? No / No

Leakage on Floor/Drain Pan at Manifold? No / No

INSPECTOR: Brian Gill DATE: May 29, 2013

INSPECTOR: Brian Gill DATE: June 4, 2013

PROCESS PIPING INSPECTION FORM

Philip Services Corporation / 21 EMI
PSC Fernley Facility
2095 Newlands Drive East
Fernley, NV 89408
(775)575-2760

Tank Number: 304

Date Inspected: May 29, 2013

Fill Line Assembly:

Number of Fill Line Assemblies: None

Description:

Discharge Line Assembly:

Number of Discharge Line Assemblies: 2 Discharge Line Assemblies

Description: The bulkhead fitting to the threaded valve connection is the only permanent piping in the discharge line assembly. There was no damage to the process piping connection or to the tank shell. No evidence of leaking found. The permanent piping is secured and stable.

INSPECTOR: Brian [signature] DATE: May 29, 2013

NORTECH Geotechnical/Civil Consultants, Ltd.

FIELD CONSTRUCTION INSPECTION REPORT

PROJECT PSC Environmental JOB NO. 14441-28C

LOCATION 2095 Newlands Drive, Fernley, Nevada REPORT NO. 10

CONTRACTOR L & H Concrete WEEK ENDING 05-04-13

Work Description

April 29 - I inspected steel reinforcement in concrete slab for tanks 303, 304 and 305. Rebar was placed in accordance with structural details on approved plans. I was on site for concrete pour on tank slab. I cast one set of concrete cylinders and I performed one passing slump test. (MSV)

April 30 - Transported previously cast cylinders to the laboratory for proper curing and testing. (MSV)

NORTECH
GEOTECHNICAL/CIVIL CONSULTANTS, LTD.
300 Western Road, #3, Reno, NV 89506 · (775) 852-7475 FAX (775) 852-7488

REPORT OF CONCRETE CYLINDER TEST

Project Number: 14441-28C
Project: PSC Environmental
Client: Equipment Pro, Inc.
Address: 721 Parkwood Dr., Ste. Genevieve, MO 63670

Report Number: 6

Attn:

FIELD TEST CONDITIONS AND RESULTS (ASTM C31)

Date Placed: 4/29/2013
Time Sampled: 9:30 AM
Location of Sample: Tank Slab, 303, 304, 305
Supplier: American
Truck Number: 487
Mix Number: 92BW
Design Strength: 4000 psi
Time Batched: 8:50 AM
Batch Size: 10 yds.
Slump: 4 in. (ASTM C 143)
Concrete Temp: 70 °F
Water Added: 20 gal.

Ticket Number: 12001037

Time Placed: 9:30 AM

Air Content: N/A % (ASTM C 173)
Ambient Temp: inside °F
Technician: MSV

LABORATORY TEST RESULTS (ASTM C39)

Specimen	Test Date	Age	Load	Diameter	Area	Strength	Percent of Design	Type of Fracture
736	5/6/2013	7	39950	4.00	12.57	3180		1
737	5/27/2013	28	61380	4.00	12.57	4880	122%	1
738	5/27/2013	28	59820	4.00	12.57	4760	119%	1
739		0		4.00	12.57			

Remarks:

Copies to:

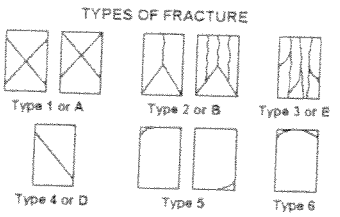

Reported by:
Kent Seegmiller
Concrete Laboratory Manager

Tank Data Sheet

RCRA Regulated? YES

Tank Location: Dewatering Area

Tank Name: Post-Treatment Tank

Tank Numbers: 303-306

Process Description: Storage/Settling of Post-Treatment Effluent

Vessel Fluid: Neutralized/Treated Liquids w/Treatment Chemical Residuals

Specific Gravity: <1.50

Freeboard At Working Vol (ft^3): 33.42

Normal Operating Pressure: ATMOSPHERIC

Temperature (F°) AMBIENT

	Material	Thickness	Type
Bottom	Virgin linear polyethylene	1.4" avg.	Flat
Shell	Virgin linear polyethylene	1.05" avg.	CYLINDRICAL-VERTICAL
Roof	Virgin linear polyethylene	0.45" avg.	dome

Working Volume (USG): 12,500 gallons

Insulation: NONE

Nominal Volume (USG): 12,750 gallons

Method of Construction: rotational molding process

Tank O.D. (ft): 11' 10"

Tank Height or Length (ft): 16' 6"

Design Code Used: IBC 2006 AISC 13th Edition

Date In Service: PLANNED TANKS

Anchorage: seismic restraints bolted to concrete. Anchorage designs per 2006 IBC.

Connections:

Item No:	Size (In.)	Gasket	Description
A	24		PE Threaded-vented manway w/22" access
B	3		S.U.M.O w/ss insert, viton o-rings & PVC adapter
			ASM 3" CPVC SUMO adapter

Interior Coating: none

Exterior Coating: none

Tank Mfger: Snyder Industries Inc.

Remarks:

ALL TANKS
PO #12-986

TANK 2 OF 4

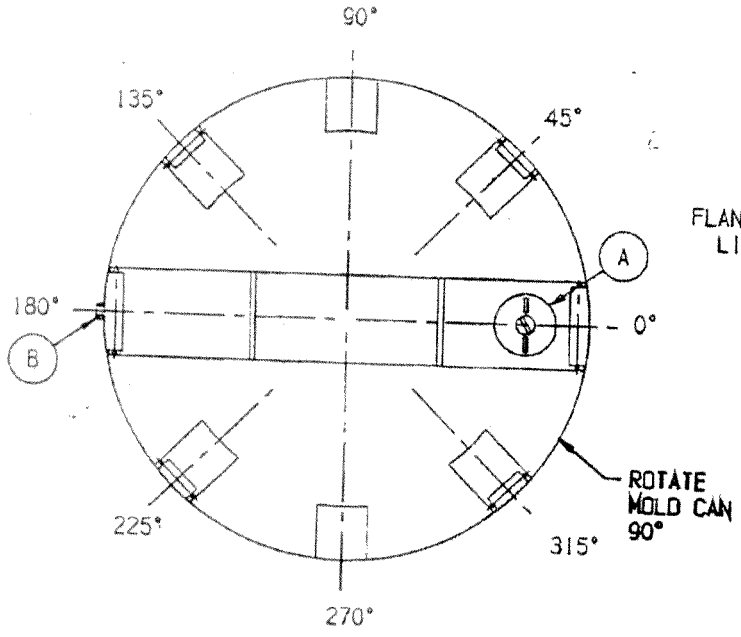

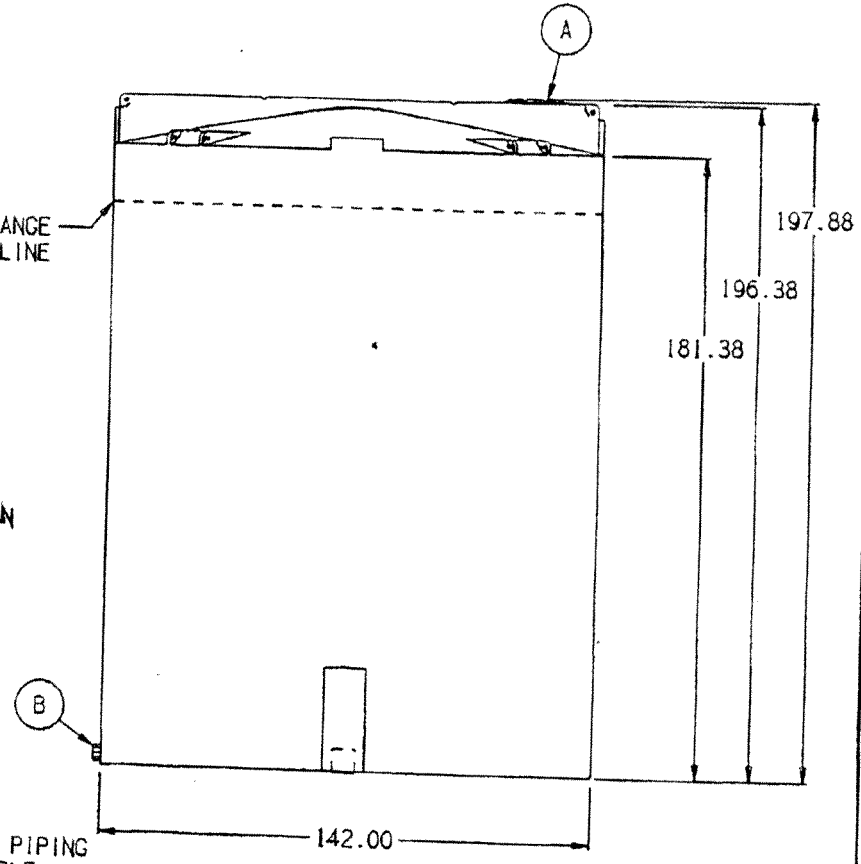

NOTE:
ADEQUATE CLEARANCE MUST BE ALLOWED FOR S.U.M.O. FITTING AND PIPING ACCESSORIES. A NOTCH IN THE TANK SUPPORT PAD MAY BE ADVISABLE. ALL EXTERNAL PIPING MUST BE INDEPENDENTLY SUPPORTED.

A. 24" PE THREADED-VENTED MANWAY W/22" ACCESS [P/N 34700352]
B. 3" S.U.M.O. W/SS INSERT, VITON O-RINGS & PVC ADAPTER [P/N 34700299]
B. ASM 3" CPVC SUMO ADAPTER [P/N 35900511]

* BASE FITTINGS TO BE LEFT INSTALLED AT TIME OF SHIPMENT PER SII PROCEDURE
* Consult Snyder's Guidelines for Use and Installation prior to delivery. Available on-line at www.snydernet.com

ALL DIMENSIONS, DESIGNS, AND INFORMATION ON THIS PRINT MUST BE CONSIDERED PROPRIETARY TO SNYDER INDUSTRIES, INC. AND MAY NOT BE USED, COPIED, OR DISTRIBUTED WITHOUT WRITTEN PERMISSION OF AN OFFICER (OR HIS AGENT) OF THE FIRM.

APPROVED: [signature] 12/21/12

SIGNATURE: _____ DATE: ____
DRAWING NOT VALID UNLESS SIGNED
(all dimensions in inches)

12,500 GALLON FLAT BOTTOM TANK

© SNYDER INDUSTRIES, INC., 2012

PART # [signature] 12/19
TANK: 5350011N97401
HDLPE/NATURAL/1.5 SG
ROTATE MOLD CAN 90°
REF#: 29881 12/19/12

SNYDER INDUSTRIES INC.

13012750 70 6K to cut DP 1/18/13

tobey wade
STRUCTURAL ENGINEERS

May 31, 2013
Project No. R405-08-13

Ms. Tracy Buono
Facility/Operations Manager
PSC FERNLEY FACILITY
2095 Newlands Drive East
Fernley, NV 89408

RE: TANK 305 INTERIM CERTIFICATION

Dear Ms. Buono:

In accordance with the Fernley Facility Amended Tank Replacement Plan dated December 17, 2012, and Appendix D-6 of the pending July 2012 RECRA Permit, each new tank is required to be certified by an Independent Registered Professional Engineer (IRPE) prior to being placed into service. This letter has been prepared to document the evaluation of Tank 305 as performed by Tobey-Wade Consulting.

It should be noted that Tank 305 currently has permanent bulkhead fittings with valves for connection of temporary discharge lines. The permanent process piping servicing Tank 305 will be installed in Phase 3 as outlined in the above-referenced documents. Accordingly, this certification is being provided as an interim certification. Final certification of Tank 305 will be provided after the permanent piping and all other associated permanent systems have been installed and inspected.

Background

Tank 305 is a virgin linear polyethylene tank as manufactured by Snyder Industries, Inc. and it has a 12,500 gallon capacity. Snyder Industries has provided data relative to the tank's strength.

Jaik Choi Associates conducted a stability analysis and designed anchorage for the tank. Tobey-Wade Consulting evaluated the existing foundation and designed a new reinforced concrete pad based on loads provided by Jaik Choi Associates.

Certification of the tank shell's compatibility with the proposed waste stream has been provided by others.

Findings

Based on our evaluation, the following systems are hereby certified as being in compliance with the Amended Tank Replacement plan:

- Tank 305 has sufficient strength to contain the proposed waste materials without rupturing, based on wall thickness information provided by Snyder Industries.
- Tank 305 is situated on a reinforced concrete foundation system which is capable of adequately supporting the tank and its contents under static and dynamic conditions.
- Tank 305 is located in an area with sufficient secondary containment as required by 40 CFR Ch. I, 264.193.
- Tank 305 is anchored to resist overturning when subjected to site-specific loads 2006 International Building Code level seismic events based on the analysis performed by Jaik Choi Associates.
- Tank 305 is anchored to prevent sliding when subjected to site-specific 2006 International Building Code level seismic events based on the analysis performed by Jaik Choi Associates.
- The process piping discharge connections have been inspected and found to be undamaged and with no evidence of leakage. The piping connections are adequately attached to the tank to prevent displacement during an earthquake. The associated Process Piping inspection form is attached.
- Special Inspection of the epoxy anchor bolt installation and concrete pad construction was performed as required by the International Building Code. Copies of the Special Inspection reports are attached.
- Tank 305 has been subjected to a 24-hour leak test and found to be watertight. The Tank Leakage Test results are included in the Tank Inspection Form, copy attached.
- The exterior of Tank 305's shell wall has been inspected and found to be undamaged. The Tank Shell Inspection results are included in the Tank Inspection Form, copy attached.

Tobey-Wade Consulting witnessed the tank leakage test and conducted the tank shell inspection, under my direct supervision. Special Inspections were performed by inspectors from Nortech Consultants based on anchorage requirements provided by Jaik Choi Associates.

Certification Statement

I certify under penalty of law that this report and all attachments were prepared under my direction and supervision in accordance with a system developed to assure that qualified personnel properly gather and evaluate the information submitted. Based on my inquiry of the person or persons who manage the system or those persons directly responsible for gathering the information, the information, submitted is, to the best of my knowledge and belief, true, accurate, and complete. I am aware that there are significant penalties for submitting false information, including the possibility of fines and imprisonment for knowing violations.

This report has been prepared in accordance with acceptable engineering practices and is subject to the assumptions and limitations stated in the report. Also note that this certification covers the aforementioned aspects of Tank 305 only.

Please feel free to contact me at your convenience should you have any questions relating to our findings.

Sincerely,
TOBEY-WADE CONSULTING

Terrence R. Tobey

TERRENCE R. TOBEY, P.E., S.E.
Principal Structural Engineer

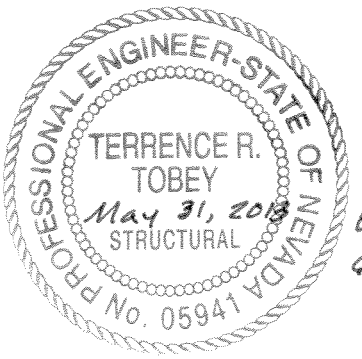

NORTECH Geotechnical/Civil Consultants, Ltd.

FIELD CONSTRUCTION INSPECTION REPORT

PROJECT PSC Environmental JOB NO. 14441-28C

LOCATION 2095 Newlands Drive, Fernley, Nevada REPORT NO. 11

CONTRACTOR L & H Concrete WEEK ENDING 05-11-13

Work Description

May 9 - On site for epoxy inspection on anchor bolts (1 inch) for support plates around tanks 303. 304 and 305. Holes (54 each tank) were drilled to specified embed depth (9 inches) and were cleaned out thoroughly. I observed placement of anchor bolts and epoxy as they were installed in accordance with structural details on approved engineer sop drawings, sheet B-2497. (MSV)

TANK INSPECTION FORM

OWNER: Philip Services Corporation / 21 EMI
PSC Fernley Facility
2095 Newlands Drive East
Fernley, NV 89408
(775)575-2760

TANK NO.: 305, 12,500 gallon flat-bottom

TANK SHELL INSPECTION

Date Inspected: May 29, 2013

Findings: Good Condition, Minor Scratches

TANK ANCHORAGE STRUCTURAL OBSERVATION

Type of Anchorage System: Jaik Choi Calcs/Snyder Industries Drawings

Date Inspected: May 29, 2013

# of Anchor Plates/Tie-downs: 9 Plates / 4 Tie Downs

AB Type, Diameter, Spacing and Number/plate: 1"ø Bolts, 6 Per Plate -
Size of Anchor Plate & Contact with Tank: Per Drawing B-2468B By Synder Industries, Contact w/ Tank

Edge Distances: 8" @ One Location, Greater than 12" @ others

Special Inspection Completed? Yes

TANK LEAKAGE TEST

Date Filled: May 29, 2013, 10:00 pm — Water Level below Inspection Hatch: 30 1/2"

Date of Re-inspection: May 30, 2013 — Water Level below Inspection Hatch: 30 1/2"

Shell Leakage? No / No

Leakage on Floor/Drain Pan at Manifold? No / No

INSPECTOR: Brad W **DATE:** May 29, 2013

INSPECTOR: Brad W **DATE:** May 30, 2013

PROCESS PIPING INSPECTION FORM

Philip Services Corporation / 21 EMI
PSC Fernley Facility
2095 Newlands Drive East
Fernley, NV 89408
(775)575-2760

Tank Number: 305

Date Inspected: May 29, 2013

Fill Line Assembly:

Number of Fill Line Assemblies: None

Description:

Discharge Line Assembly:

Number of Discharge Line Assemblies: 2

Description: The bulkhead fitting to the threaded valve connection is the only permanent piping in the discharge line assembly. A temporary discharge line is attached to the valve connection. There was no damage to the process piping connection or to the tank shell. No evidence of leaking found. The permanent piping is secured and stable.

INSPECTOR: Lawrence Lobey For Brandon Ellis **DATE:** May 30, 2013

NORTECH Geotechnical/Civil Consultants, Ltd.

FIELD CONSTRUCTION INSPECTION REPORT

PROJECT PSC Environmental JOB NO. 14441-28C

LOCATION 2095 Newlands Drive, Fernley, Nevada REPORT NO. 10

CONTRACTOR L & H Concrete WEEK ENDING 05-04-13

Work Description

April 29 - I inspected steel reinforcement in concrete slab for tanks 303, 304 and 305. Rebar was placed in accordance with structural details on approved plans. I was on site for concrete pour on tank slab. I cast one set of concrete cylinders and I performed one passing slump test. (MSV)

April 30 - Transported previously cast cylinders to the laboratory for proper curing and testing. (MSV)

NORTECH
GEOTECHNICAL/CIVIL CONSULTANTS, LTD.
300 Western Road, #3, Reno, NV 89506 · (775) 852-7475 FAX (775) 852-7488

REPORT OF CONCRETE CYLINDER TEST

Project Number: 14441-28C
Project: PSC Environmental
Client: Equipment Pro, Inc.
Address: 721 Parkwood Dr., Ste. Genevieve, MO 63670

Report Number: 6

Attn:

FIELD TEST CONDITIONS AND RESULTS (ASTM C31)

Date Placed: 4/29/2013
Time Sampled: 9:30 AM
Location of Sample: Tank Slab, 303, 304, 305
Supplier: American
Truck Number: 487
Mix Number: 92BW
Design Strength: 4000 psi
Time Batched: 8:50 AM
Batch Size: 10 yds.
Slump: 4 in. (ASTM C 143)
Concrete Temp: 70 °F
Water Added: 20 gal.

Ticket Number: 12001037

Time Placed: 9:30 AM

Air Content: N/A % (ASTM C 173)
Ambient Temp: inside °F
Technician: MSV

LABORATORY TEST RESULTS (ASTM C39)

Specimen	Test Date	Age	Load	Diameter	Area	Strength	Percent of Design	Type of Fracture
736	5/6/2013	7	39950	4.00	12.57	3180		1
737	5/27/2013	28	61380	4.00	12.57	4880	122%	1
738	5/27/2013	28	59820	4.00	12.57	4760	119%	1
739		0		4.00	12.57			

Remarks:

Copies to:

TYPES OF FRACTURE

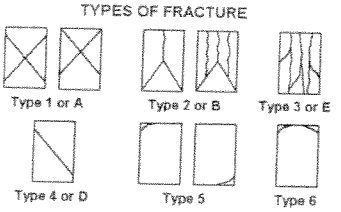

Reported by:

Kent Seegmiller
Concrete Laboratory Manager

INSPECTION CHECKLIST FOR INDUSTRIAL TANKS

Work Order Number: 352238 SO Number: 146963 Order Qty: 3 of 3 Part Number I2535003016 20

Tank Description: Size 12500V SUMO

Specific Gravity 1.5 Material HDPE/NAT Serial Number 13032 76282

Circle YES or NO or NA Below as Required

Audit: (Yes) No If yes, attach audit. Correct Audit (600 psi) 750 psi Other _____

Hydro test: Yes (No) Percent Gel test 65% minimum: _____ or NA

Drop dart: Pass Fail NH/NF

Sumo Test: (Pass) Fail NA What psi 60 psi How long 20 min AV 3-21-13

IF THIS IS A NO HOLES NO FITTING TANK SKIP SECTIONS A & B. NHNF: Yes

SECTION A - FITTINGS – SPECIFICATION:

Note: Proper application and installation of fittings are critical to the success of an SII tank. Please follow this procedure.

Is the application correct? Circle YES or NO or NA

- Are we using the correct gaskets per the order?
- Is the material correct for encapsulated bolts? Stainless (natural) Hastaloy (yellow) Viton or Epdm Titanium (green)
- Do the pvc fitting U-vents, siphon tubes, etc. have enough glue? (see evidence in the joints) . . Yes No NA

SECTION B - FITTINGS – LOCATION:

- Fitting layout per cut sheet correct? . . . . . Yes No

If no, explain discrepancies _____

Are the hole sizes correct for the fittings? . . . . . Yes No

Are the gasket areas smooth and even thicknesses on the inside of the tank? (no bumps) . . . . . Yes No

Have the fittings been torque to 1/3 compression on the gasket? . . . . . Yes No

If no, explain (hand tight), etc. _____

SECTION C - EXTRA'S – SUPPLEMENTAL HARDWARE: (includes ladders, down tubes, sight gages, additional plumbing, etc.)

The following have been installed and found to fit and function properly.

Level sensor Y or N Settings: Tank height _____ Fluid level _____ Gallons per inch _____
Down pipe Y or N Welds tested with soft mallet Y or N

Other Items

items Boxed/pic taken AV 3-21-13
All items per line inst AV 3-21-13
one Box to ship inside tank AV3-21-13
Bot PLACED INSIDE TANK(Pic) WASHED INSIDE.
Washed out side of tank SD 3/24/13

Final Buyoff: Production SD 3/23/13 Quality _____

(I have checked the above mentioned tank and documentation and have found all to be acceptable.)

ALL TANKS LLC
10-8512

TANKS 1-3

ROTATE CAN 180°

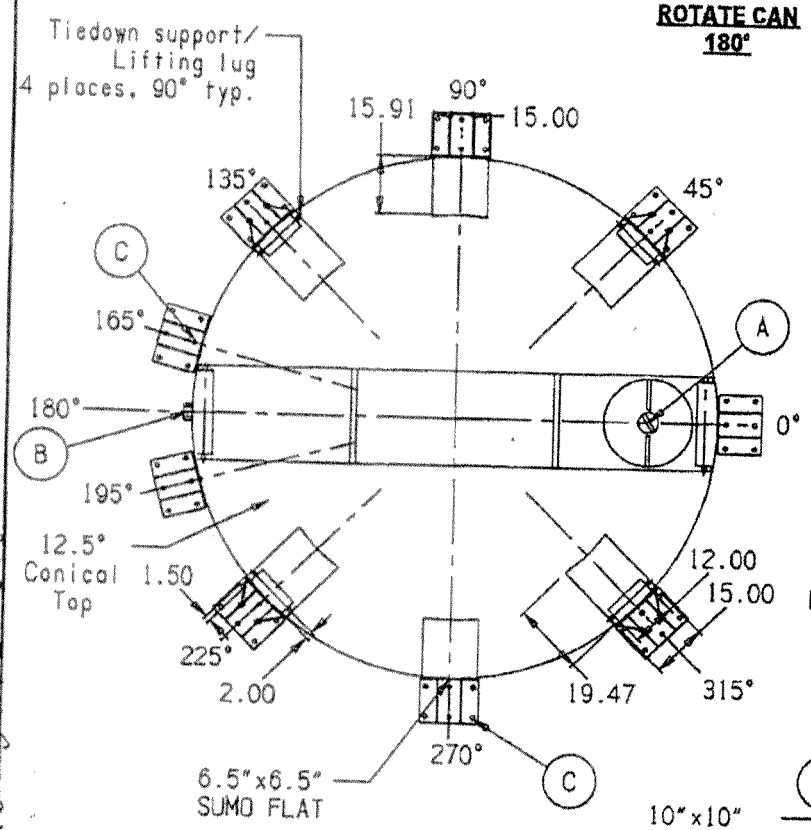

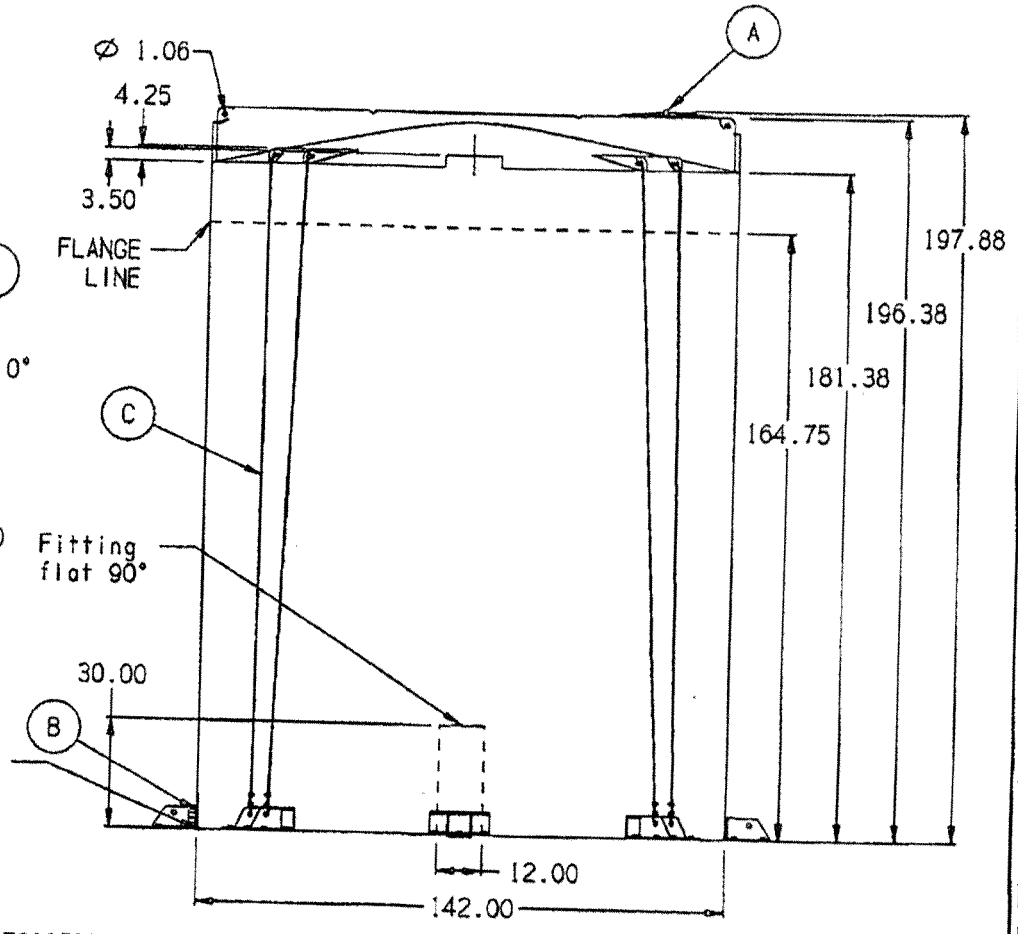

NOTES:

ALL EXTERNAL PIPING MUST BE INDEPENDENTLY SUPPORTED

A. 24" PE THREADED-VENTED MANWAY W/22" ACCESS [P/N 34700352]
B. 3" S.U.M.O. W/SS INSERT, VITON O-RINGS & PVC ADAPTER [P/N 34700299]
B. ASM 3" CPVC SUMO ADAPTER [P/N 35900511]
C. SEISMIC GS CABLE TIE-DOWN SYSTEM [P/N 34700173]
C. GALVANIZED STEEL SEISMIC ANCHOR PLATE - 6 BOLT STANDARD VERSION [P/N 33900408]

* BASE FITTINGS TO BE LEFT INSTALLED AT TIME OF SHIPMENT PER SII PROCEDURE
* Consult Snyder's Guidelines for Use and Installation prior to delivery. Available on-line at www.snydernet.com

ALL DIMENSIONS, DESIGNS, AND INFORMATION ON THIS PRINT MUST BE CONSIDERED PROPRIETARY TO SNYDER INDUSTRIES, INC. AND MAY NOT BE USED, COPIED, OR DISTRIBUTED WITHOUT WRITTEN PERMISSION OF AN OFFICER (OR HIS AGENT) OF THE FIRM.

APPROVED: 2/26/13

SIGNATURE: _____ DATE: ____

DRAWING NOT VALID UNLESS SIGNED

(all dimensions in inches)

12,500 GALLON FLAT BOTTOM TANK

© SNYDER INDUSTRIES, INC., 2012

PART #

PRIMARY: 535001IN97401
HDLPE/NATURAL/1.5 SG

REF#: 30162

02/22/13

SNYDER INDUSTRIES INC.

30327628

SII "12500V" 142" G-SERIES VERTICAL, CONE TOP TANK

16.36 OVER ALL TANK HEIGHT (FEET)
600 TENSILE STRENGTH (PSI)
15.11 SIDE WALL HEIGTH (FEET)
142 DIAMETER (INCHES)
1.5 SPECIFIC GRAVITY
0.45 AVG. THICKNESS TOP (INCHES)
BOTTOM THICKNESS (INCHES)
FEET FROM OUT SIDE EDGE

0.7	0.5 ` #	686
0.6	1 ` #	747
0.5	2 ` #	700
0.4	CENTER #	624

15 DOME HEIGHT (INCHES)
574.01 CAP. IN DOME TOP
12779.2 MIN. TANK CAP.(GAL.)
2566.15 CHARGE WEIGHT (LBS.)
_____ OVEN CYCLE TIME (MIN)
_____ OVEN TEMP. (DEG."F")
_____ DELAY (MIN.)
_____ COOLING AIR (MIN.)
_____ COOLING WATER (MIN.)
_____ COOLING AIR (MIN)
_____ OVEN DAMPER
_____ MACHINE/ARM
_____ ROTATION

American Process

SO 14863

DIST.FROM BOTTOM(FT)	DESIGN WALL		SIDE THICKNESS CUTOUT	9.29	18.59	27.88 (FEET)
15	0.30	# #				
14	0.30	# #				
13	0.30	# #				
12	0.30	# #				
11	0.32	# #				
10	0.39	# #				
9	0.47	# #				
8	0.55	# #				
7	0.62	# #				
6	0.70	# #				
5	0.78	# #				
4	0.85	# #		884		841
3	0.93	# #		900		884
2	1.01	# #		968		950
1	1.08	# #		1043		1030
0.5	1.12	# #		1205		1288

DATE: 3-22-13
SERIAL #: 1303276282
POWDER TYPE: EXXON
INSTRUMENT CALIBRATED TO
CUTOUT:
LOT #:
PART COLOR: NAT
PIGMENT WEIGHT (GRAMS):
GEL %:
DROP DART WEIGHT:
DROP DART HEIGHT:
DROP DART TEMPERATURE:
DROP DART RESULTS:
Q.A. PERSONNEL:
COMMENTS:

Top View

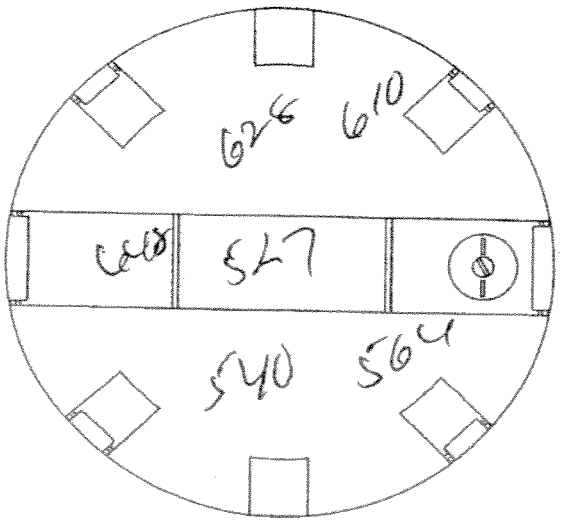

Bottom View

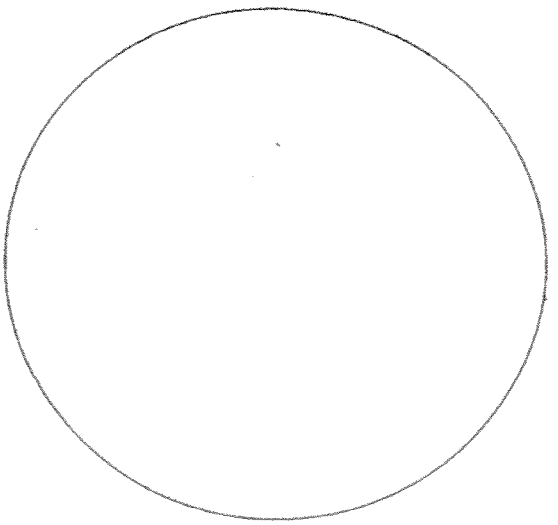

tobey wade
STRUCTURAL ENGINEERS

August 7, 2013
Project No. R405-13-13

Ms. Tracy Buono
Facility/Operations Manager
PSC FERNLEY FACILITY
2095 Newlands Drive East
Fernley, NV 89408

RE: TANK 305 CERTIFICATION

Dear Ms. Buono:

In accordance with the Fernley Facility Amended Tank Replacement Plan dated December 17, 2012, and Appendix D-6 of the pending July 2012 RECRA Permit, each new tank is required to be certified by an Independent Registered Professional Engineer (IRPE) prior to being placed into service. This letter has been prepared to document the evaluation of Tank 305 as performed by Tobey-Wade Consulting.

Background

Tank 305 is a virgin linear polyethylene tank as manufactured by Snyder Industries, Inc. and it has a 12,500 gallon capacity. Snyder Industries has provided data relative to the tank's strength.

Jaik Choi Associates conducted a stability analysis and designed anchorage for the tank. Tobey-Wade Consulting evaluated the existing foundation and designed a new reinforced concrete pad based on loads provided by Jaik Choi Associates.

Certification of the tank shell's compatibility with the proposed waste stream has been provided by others.

Findings

Based on our evaluation, the following systems are hereby certified as being in compliance with the Amended Tank Replacement plan:

- Tank 305 has sufficient strength to contain the proposed waste materials without rupturing, based on wall thickness information provided by Snyder Industries.

- Tank 305 is situated on a reinforced concrete foundation system which is capable of adequately supporting the tank and its contents under static and dynamic conditions.

- Tank 305 is located in an area with sufficient secondary containment as required by 40 CFR Ch. I, 264.193.

- Tank 305 is anchored to resist overturning when subjected to site-specific loads 2006 International Building Code level seismic events based on the analysis performed by Jaik Choi Associates.

- Tank 305 is anchored to prevent sliding when subjected to site-specific 2006 International Building Code level seismic events based on the analysis performed by Jaik Choi Associates.

- The process piping discharge connections have been inspected and found to be undamaged and with no evidence of leakage. The piping connections are adequately attached to the tank to prevent displacement during an earthquake. The associated Process Piping inspection form is attached.

- Special Inspection of the epoxy anchor bolt installation and concrete pad construction was performed as required by the International Building Code. Copies of the Special Inspection reports are attached.

- Tank 305 has been subjected to a 24-hour leak test and found to be watertight. The Tank Leakage Test results are included in the Tank Inspection Form, copy attached.

- The exterior of Tank 305's shell wall has been inspected and found to be undamaged. The Tank Shell Inspection results are included in the Tank Inspection Form, copy attached.

Tobey-Wade Consulting witnessed the tank leakage test and conducted the tank shell inspection, under my direct supervision. Special Inspections were performed by inspectors from Nortech Consultants based on anchorage requirements provided by Jaik Choi Associates.

Certification Statement

I certify under penalty of law that this report and all attachments were prepared under my direction and supervision in accordance with a system developed to assure that qualified personnel properly gather and evaluate the information submitted. Based on my inquiry of the person or persons who manage the system or those persons directly responsible for gathering the information, the information, submitted is, to the best of my knowledge and belief, true, accurate, and complete. I am aware that there are significant penalties for submitting false information, including the possibility of fines and imprisonment for knowing violations.

This report has been prepared in accordance with accepted engineering practices and is subject to the assumptions and limitations stated in the report. Also note that this certification covers the aforementioned aspects of Tank 305 only.

Please feel free to contact me at your convenience should you have any questions relating to our findings.

Sincerely,
TOBEY-WADE CONSULTING

Terrence R. Tobey

TERRENCE R. TOBEY, P.E., S.E.
Principal Structural Engineer

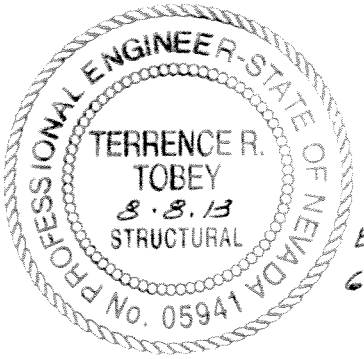

NORTECH Geotechnical/Civil Consultants, Ltd.

FIELD CONSTRUCTION INSPECTION REPORT

PROJECT PSC Environmental JOB NO. 14441-28C

LOCATION 2095 Newlands Drive, Fernley, Nevada REPORT NO. 11

CONTRACTOR L & H Concrete WEEK ENDING 05-11-13

Work Description

May 9 - On site for epoxy inspection on anchor bolts (1 inch) for support plates around tanks 303. 304 and 305. Holes (54 each tank) were drilled to specified embed depth (9 inches) and were cleaned out thoroughly. I observed placement of anchor bolts and epoxy as they were installed in accordance with structural details on approved engineer sop drawings, sheet B-2497. (MSV)

TANK INSPECTION FORM

OWNER: Philip Services Corporation / 21 EMI
PSC Fernley Facility
2095 Newlands Drive East
Fernley, NV 89408
(775)575-2760

TANK NO.: 305, 12,500 gallon flat-bottom

TANK SHELL INSPECTION

Date Inspected: May 29, 2013

Findings: Good Condition, Minor Scratches

TANK ANCHORAGE STRUCTURAL OBSERVATION

Type of Anchorage System: Jaik Choi Calcs/Snyder Industries Drawings

Date Inspected: May 29, 2013

# of Anchor Plates/Tie-downs: 9 Plates / 4 Tie Downs

AB Type, Diameter, Spacing and Number/plate: } 1"ø Bolts, 6 Per Plate -

Size of Anchor Plate & Contact with Tank: } Per Drawing B-2468B By Synder Industries, Contact w/ Tank

Edge Distances: 8" @ One Location, Greater than 12" @ others

Special Inspection Completed? Yes

TANK LEAKAGE TEST

Date Filled: May 29, 2013, 10:00 pm

Water Level below Inspection Hatch: 30 1/2"

Date of Re-inspection: May 30, 2013

Water Level below Inspection Hatch: 30 1/2"

Shell Leakage? No / No

Leakage on Floor/Drain Pan at Manifold? No / No

INSPECTOR: [signature] **DATE:** May 29, 2013

INSPECTOR: [signature] **DATE:** May 30, 2013

PROCESS PIPING INSPECTION FORM

Philip Services Corporation / 21 EMI
PSC Fernley Facility
2095 Newlands Drive East
Fernley, NV 89408
(775)575-2760

Tank Number: 305

Date Inspected: May 29, 2013

Fill Line Assembly:

Number of Fill Line Assemblies: None

Description:

Discharge Line Assembly:

Number of Discharge Line Assemblies: 2

Description: The bulkhead fitting to the threaded valve connection is the only permanent piping in the discharge line assembly. A temporary discharge line is attached to the valve connection. There was no damage to the process piping connection or to the tank shell. No evidence of leaking found. The permanent piping is secured and stable.

INSPECTOR: Terrence Tobey For Brandon Ellis DATE: May 30, 2013

NORTECH Geotechnical/Civil Consultants, Ltd.

FIELD CONSTRUCTION INSPECTION REPORT

PROJECT PSC Environmental JOB NO. 14441-28C

LOCATION 2095 Newlands Drive, Fernley, Nevada REPORT NO. 10

CONTRACTOR L & H Concrete WEEK ENDING 05-04-13

Work Description

April 29 - I inspected steel reinforcement in concrete slab for tanks 303, 304 and 305. Rebar was placed in accordance with structural details on approved plans. I was on site for concrete pour on tank slab. I cast one set of concrete cylinders and I performed one passing slump test. (MSV)

April 30 - Transported previously cast cylinders to the laboratory for proper curing and testing. (MSV)

NORTECH
ENGINEERING CONSULTANTS, LTD
300 Western Road, #3, Reno, NV 89506 (775) 852-7475 FAX (775) 852-7488

REPORT OF CONCRETE CYLINDER TEST

Project Number: 14441-28C
Project: PSC Environmental
Client: Equipment Pro, Inc.
Address: 721 Parkwood Dr., Ste. Genevieve, MO 63670

Report Number: 6

Attn:

FIELD TEST CONDITIONS AND RESULTS (ASTM C31)

Date Placed: 4/29/2013
Time Sampled: 9:30 AM
Location of Sample: Tank Slab, 303, 304, 305
Supplier: American
Truck Number: 487
Mix Number: 92BW
Design Strength: 4000 psi
Time Batched: 8:50 AM
Batch Size: 10 yds.
Slump: 4 in. (ASTM C 143)
Concrete Temp: 70 °F
Water Added: 20 gal.

Ticket Number: 12001037

Time Placed: 9:30 AM

Air Content: N/A % (ASTM C 173)
Ambient Temp: inside °F
Technician: MSV

LABORATORY TEST RESULTS (ASTM C39)

Specimen	Test Date	Age	Load	Diameter	Area	Strength	Percent of Design	Type of Fracture
736	5/6/2013	7	39950	4.00	12.57	3180		1
737	5/27/2013	28	61380	4.00	12.57	4880	122%	1
738	5/27/2013	28	59820	4.00	12.57	4760	119%	1
739		0		4.00	12.57			

Remarks:

Copies to:

TYPES OF FRACTURE

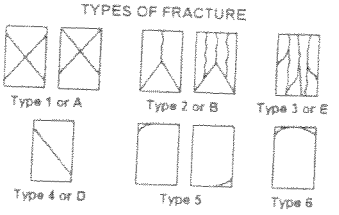

Reported by:

Kent Seegmiller
Concrete Laboratory Manager

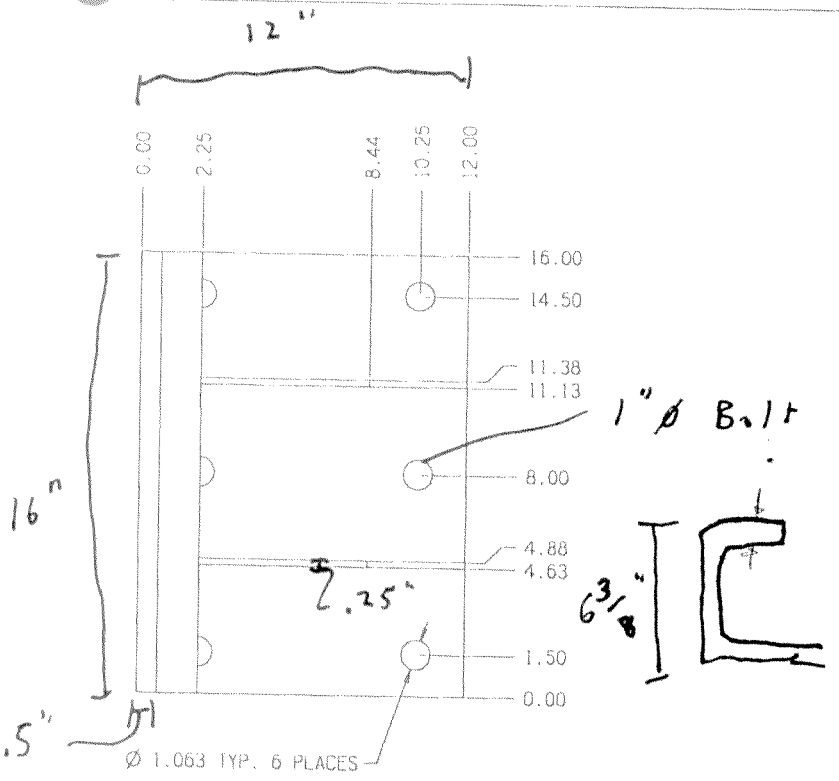

NOTES:
1. MATERIAL ASTM A-36 OR EQUAL. PLATE 1/4 AND 3/8" THICK.
2. HOT DIP GALVANIZE THE PART PER ASTM A-123-89.
3. PART SHOWN IS MADE WITH A BENT PLATE. BEND MUST BE PERPENDICULAR TO THE PLATE GRAIN.
4. DEBUR ALL EDGES.
5. CHAMFER OR RADIUS THE 1-1/4" HOLE ON THE VERTICAL PLATE 1/32".
6. NO BURS OR SHARP EDGES ALLOWED ON THE FRONT FACE (6.375" X 16" AREA) OF THE WELDMENT.
7. INSPECT THE POST GALVANIZED PART FOR DRIPS AND OTHER IRREGULARITIES THAT WOULD INTERFER WITH THE HOLES OR CAUSE IRREGULAR SURFACES ON THE FRONT FACE OF THE WELDMENT. GRIND/SAND THESE AREAS SMOOTH. TOUCH UP WITH BRIGHT (ALUMINIZED) COLD GALVANIZED PAINT IF NECESSARY.

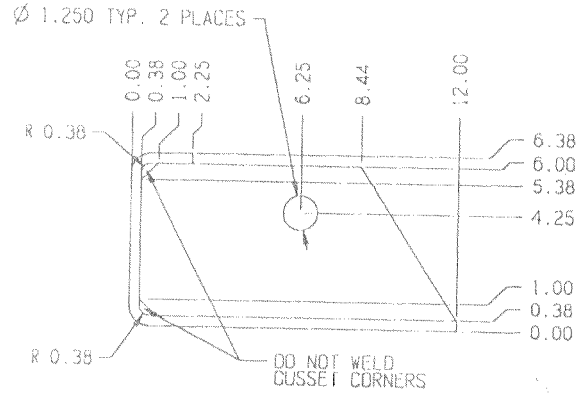

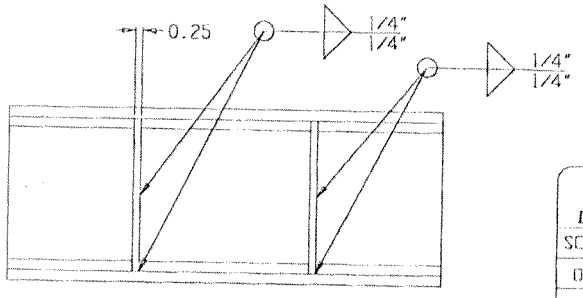

Anchor Plate for 6,500 x 120 (1.5 SG)
** 4 required for the 6,500 (1.5 SG)
Anchor Plate for 12,500 x 142 (both 1.5 & 1.9 SG)
** 8 required for the 12,500 (1.5 & 1.9 SG)

SNYDER INDUSTRIES INC.
LINCOLN, NE 68504 PHONE:(402) 467-5221 FAX:(402) 467-3247

SCALE: NTS	SII P/N: 33900408	DRAWN BY: N.L.E.
DATE: 4/22/05		REVISED: 12/14/06

GALVANIZED STEEL SEISMIC ANCHOR PLATE - 6 BOLT STANDARD VERSION

TOLERANCES UNLESS OTHERWISE SPECIFIED:
FRACTIONAL: ±1/32"; ANGULAR: ±1°
DECIMAL: .X = ±0.100"; .XX = ±0.030"; .XXX = ±0.010"

DRAWING NUMBER B-2468B

BACKGROUND INFO

tobey wade
STRUCTURAL ENGINEERS

RECEIVED
SEP 2 4 2013
ENVIRONMENTAL PROTECTION

September 20, 2013
Project No. R405-13-13

Ms. Tracy Buono
Facility/Operations Manager
PSC FERNLEY FACILITY
2095 Newlands Drive East
Fernley, NV 89408

RE: TANK 306 CERTIFICATION

Dear Ms. Buono:

In accordance with the Fernley Facility Amended Tank Replacement Plan dated December 17, 2012, and Appendix D-6 of the pending July 2012 RECRA Permit, each new tank is required to be certified by Independent Registered Professional Engineers (IRPE's) prior to being placed into service. This letter has been prepared to document the evaluation of Tank 306 as performed by Tobey-Wade Consulting.

Background

Tank 306 is a virgin linear polyethylene tank as manufactured by Snyder Industries, Inc. and it has a 12,500 gallon capacity. Snyder Industries has provided data relative to the tank's strength.

Jaik Choi Associates conducted a stability analysis and designed anchorage for the tank. Tobey-Wade Consulting evaluated the existing foundation and designed a new reinforced concrete pad based on loads provided by Jaik Choi Associates.

Certification of the tank shell's compatibility with the proposed waste stream has been provided by others.

Findings

Based on our evaluation, the following systems are hereby certified as being in compliance with the Amended Tank Replacement plan:

- Tank 306 has sufficient strength to contain the proposed waste materials without rupturing, based on wall thickness information provided by Snyder Industries.

NEVADA OFFICE
648 LANDER STREET ■ RENO, NEVADA 89509 ■ TEL: (775) 324.7757 ■ FAX: (775) 324.7797

- Tank 306 is situated on a reinforced concrete foundation system which is capable of adequately supporting the tank and its contents under static and dynamic conditions.

- Tank 306 is located in an area with sufficient secondary containment as required by 40 CFR Ch. I, 264.193.

- Tank 306 is anchored to resist overturning when subjected to site-specific loads 2006 International Building Code level seismic events based on the analysis performed by Jaik Choi Associates.

- Tank 306 is anchored to prevent sliding when subjected to site-specific 2006 International Building Code level seismic events based on the analysis performed by Jaik Choi Associates.

- The process piping fill and discharge connections have been inspected and found to be undamaged and with no evidence of leakage. The piping connections are adequately attached to the tank to prevent displacement during an earthquake. The associated Process Piping inspection form is attached.

- Special Inspection of the epoxy anchor bolt installation was performed as required by the International Building Code. Copies of the Special Inspection reports are attached.

- Tank 306 has been subjected to a 24-hour leak test and found to be watertight. The Tank Leakage Test results are included in the Tank Inspection Form, copy attached.

- The exterior of Tank 306's shell wall has been inspected and found to be undamaged. The Tank Shell Inspection results are included in the Tank Inspection Form, copy attached.

Tobey-Wade Consulting witnessed the tank leakage test and conducted the tank shell inspection, under my direct supervision. Special Inspections were performed by inspectors from Nortech Consultants based on anchorage requirements provided by Jaik Choi Associates.

Certification Statement

I certify under penalty of law that this report and all attachments were prepared under my direction and supervision in accordance with a system developed to assure that qualified personnel properly gather and evaluate the information submitted. Based on my inquiry of the person or persons who manage the system or those persons directly responsible for gathering the information, the information, submitted is, to the best of my knowledge and belief, true, accurate, and complete. I am aware that there are significant penalties for submitting false information, including the possibility of fines and imprisonment for knowing violations.

This report has been prepared in accordance with accepted engineering practices and is subject to the assumptions and limitations stated in the report. Also note that this certification covers the aforementioned aspects of Tank 306 only.

Please feel free to contact me at your convenience should you have any questions relating to our findings.

Sincerely,
TOBEY-WADE CONSULTING

Terrence R. Tobey

TERRENCE R. TOBEY, P.E., S.E.
Principal Structural Engineer

Exp.
6·30·14

Tank Data Sheet

RCRA Regulated? YES

Tank Location: Dewatering Area

Tank Name: Post-Treatment Tank

Tank Numbers: 303-306

Process Description: Storage/Settling of Post-Treatment Effluent

Vessel Fluid: Neutralized/Treated Liquids w/Treatment Chemical Residuals

Specific Gravity: <1.50

Freeboard At Working Vol (ft^3): 33.42

Normal Operating Pressure: ATMOSPHERIC

Temperature (F°) AMBIENT

	Material	Thickness	Type
Bottom	Virgin linear polyethylene	1.4" avg.	Flat
Shell	Virgin linear polyethylene	1.05" avg.	CYLINDRICAL-VERTICAL
Roof	Virgin linear polyethylene	0.45" avg.	dome

Working Volume (USG): 12,500 gallons

Nominal Volume (USG): 12,750 gallons

Tank O.D. (ft): 11' 10"

Design Code Used: IBC 2006 AISC 13th Edition

Insulation: NONE

Method of Construction: rotational molding process

Tank Height or Length (ft): 16' 6"

Date In Service: PLANNED TANKS

Anchorage: seismic restraints bolted to concrete. Anchorage designs per 2006 IBC.

Connections:

Item No:	Size (In.)	Gasket	Description
A	24		PE Threaded-vented manway w/22" access
B	3		S.U.M.O w/ss insert, viton o-rings & PVC adapter
			ASM 3" CPVC SUMO adapter

Interior Coating: none

Exterior Coating: none

Tank Mfger: Snyder Industries Inc.

Remarks:

ALL TANKS
PO #12-986

TANK 2 OF 4

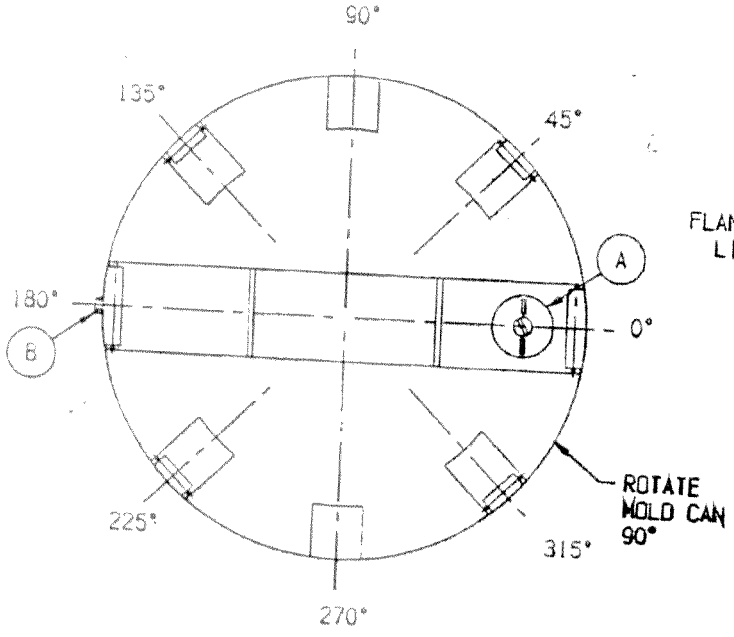

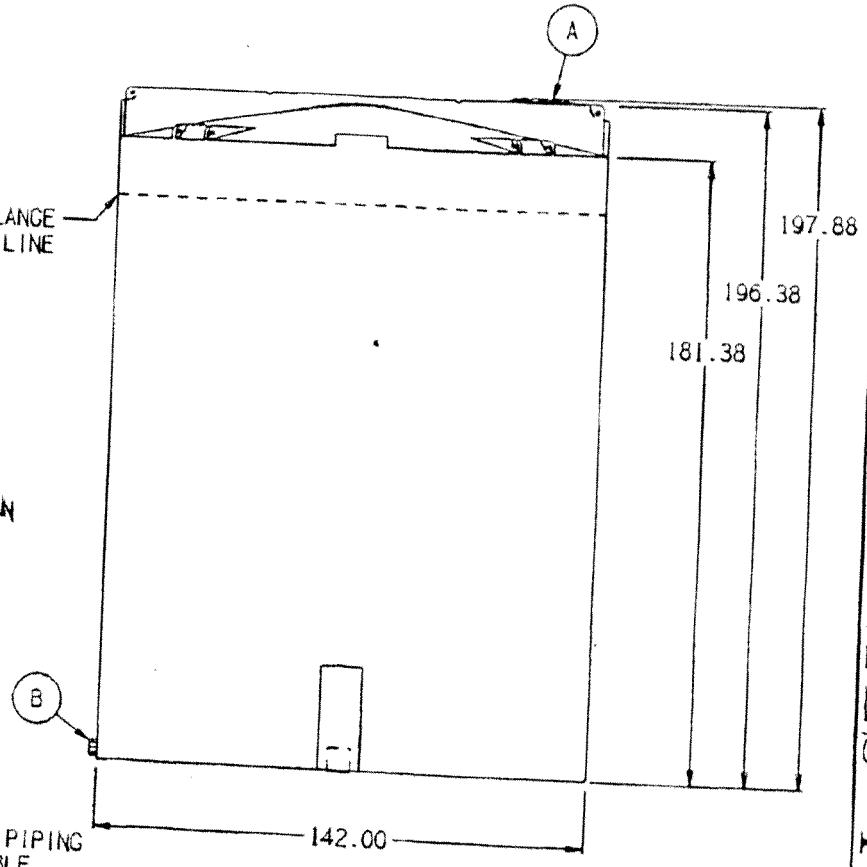

NOTE:
ADEQUATE CLEARANCE MUST BE ALLOWED FOR S.U.M.O. FITTING AND PIPING ACCESSORIES. A NOTCH IN THE TANK SUPPORT PAD MAY BE ADVISABLE. ALL EXTERNAL PIPING MUST BE INDEPENDENTLY SUPPORTED.

A. 24" PE THREADED-VENTED MANWAY W/22" ACCESS [P/N 34700352]
B. 3" S.U.M.O. W/SS INSERT, VITON O-RINGS & PVC ADAPTER [P/N 34700299]
B. ASM 3" CPVC SUMO ADAPTER [P/N 35900511]

* BASE FITTINGS TO BE LEFT INSTALLED AT TIME OF SHIPMENT PER SII PROCEDURE
* Consult Snyder's Guidelines for Use and Installation prior to delivery. Available on-line at www.snydernet.com

ALL DIMENSIONS, DESIGNS, AND INFORMATION ON THIS PRINT MUST BE CONSIDERED PROPRIETARY TO SNYDER INDUSTRIES, INC. AND MAY NOT BE USED, COPIED, OR DISTRIBUTED WITHOUT WRITTEN PERMISSION OF AN OFFICER (OR HIS AGENT) OF THE FIRM.

APPROVED: 12/2/12

SIGNATURE: _____ DATE: ____

DRAWING NOT VALID UNLESS SIGNED

(all dimensions in inches)

12,500 GALLON FLAT BOTTOM TANK

© SNYDER INDUSTRIES, INC., 2012

PART #

TANK: 53500111N97401
HDLPE/NATURAL/1.5 SG
ROTATE MOLD CAN 90°

REF#: 29881

12/19/12

SNYDER INDUSTRIES INC.

tobey wade
STRUCTURAL ENGINEERS

April 4, 2013
Project No. R405-06-13

Ms. Tracy Buono
Facility/Operations Manager
PSC FERNLEY FACILITY
2095 Newlands Drive East
Fernley, NV 89408

RE: TANK 306 INTERIM CERTIFICATION

Dear Ms. Buono:

In accordance with the Fernley Facility Amended Tank Replacement Plan dated December 17, 2012, and Appendix D-6 of the pending July 2012 RECRA Permit, each new tank is required to be certified by Independent Registered Professional Engineers (IRPE's) prior to being placed into service. This letter has been prepared to document the evaluation of Tank 306 as performed by Tobey-Wade Consulting.

It should be noted that Tank 306 currently has permanent bulkhead fittings with valves for connection of temporary discharge lines. A temporary fill line is attached to a permanent bulkhead fitting. The permanent process piping servicing Tank 306 will be installed in Phase 3 as outlined in the above-referenced documents. Accordingly, this certification is being provided as an interim certification. Final certification of Tank 306 will be provided after the permanent piping and all other associated permanent systems have been installed and inspected.

Background

Tank 306 is a virgin linear polyethylene tank as manufactured by Snyder Industries, Inc. and it has a 12,500 gallon capacity. Snyder Industries has provided data relative to the tank's strength.

Jaik Choi Associates conducted a stability analysis and designed anchorage for the tank. Tobey-Wade Consulting evaluated the existing foundation and designed a new reinforced concrete pad based on loads provided by Jaik Choi Associates.

Certification of the tank shell's compatibility with the proposed waste stream has been provided by others.

NEVADA OFFICE
648 LANDER STREET ■ RENO, NEVADA 89509 ■ TEL: (775) 324.7757 ■ FAX: (775) 324.7797

Findings

Based on our evaluation, the following systems are hereby certified as being in compliance with the Amended Tank Replacement plan:

- Tank 306 has sufficient strength to contain the proposed waste materials without rupturing, based on wall thickness information provided by Snyder Industries.
- Tank 306 will be situated on a reinforced concrete foundation system which is capable of adequately supporting the tank and its contents under static and dynamic conditions.
- Tank 306 will be located in an area with sufficient secondary containment as required by 40 CFR Ch. I, 264.193.
- Tank 306 is anchored to resist overturning when subjected to site-specific loads 2006 International Building Code level seismic events based on the analysis performed by Jaik Choi Associates.
- Tank 306 is anchored to prevent sliding when subjected to site-specific 2006 International Building Code level seismic events based on the analysis performed by Jaik Choi Associates.
- The process piping fill and discharge connections have been inspected and found to be undamaged and with no evidence of leakage. The piping connections are adequately attached to the tank to prevent displacement during an earthquake. The associated Process Piping inspection form is attached.
- Special Inspection of the epoxy anchor bolt installation was performed as required by the International Building Code. Copies of the Special Inspection reports are attached.
- Tank 306 has been subjected to a 24-hour leak test and found to be watertight. The Tank Leakage Test results are included in the Tank Inspection Form, copy attached.
- The exterior of Tank 306's shell wall has been inspected and found to be undamaged. The Tank Shell Inspection results are included in the Tank Inspection Form, copy attached.

Tobey-Wade Consulting witnessed the tank leakage test and conducted the tank shell inspection, under my direct supervision. Special Inspections were performed by inspectors from Nortech Consultants based on anchorage requirements provided by Jaik Choi Associates.

Certification Statement

I certify under penalty of law that this report and all attachments were prepared under my direction and supervision in accordance with a system developed to assure that qualified personnel properly gather and evaluate the information submitted. Based on my inquiry of the person or persons who manage the system or those persons directly responsible for gathering the information, the information, submitted is, to the best of my knowledge and belief, true, accurate, and complete. I am aware that there are significant penalties for submitting false information, including the possibility of fines and imprisonment for knowing violations.

This report has been prepared in accordance with acceptable engineering practices and is subject to the assumptions and limitations stated in the report. Also note that this certification covers the aforementioned aspects of Tank 306 only.

Please feel free to contact me at your convenience should you have any questions relating to our findings.

Sincerely,
TOBEY-WADE CONSULTING

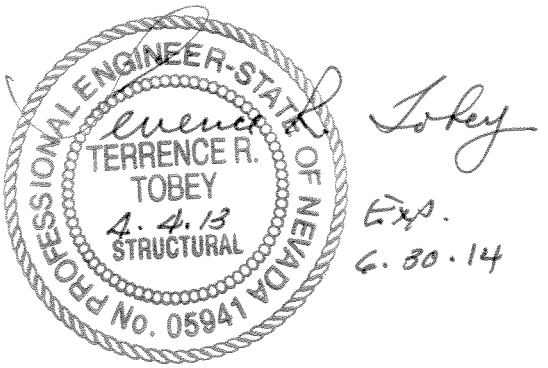

TERRENCE R. TOBEY, P.E., S.E.
Principal Structural Engineer

NORTECH Geotechnical/Civil Consultants, Ltd.

FIELD CONSTRUCTION INSPECTION REPORT

PROJECT PSC Environmental JOB NO. 14441-28C

LOCATION 2095 Newlands Drive, Fernley, Nevada REPORT NO. 5

CONTRACTOR L & H Concrete WEEK ENDING 02-23-13

Work Description

February 23 - On site for epoxy inspection on concrete slab dowels (vertical #4 and horizontal (#'6's). Holes were drilled to proper embed depth, 4" for #4 dowels and 6-3/4" for #6 dowels and were cleaned thoroughly. Epoxy dowels were placed in accordance with structural details on approved plans. Epoxy and dowels were placed for tank pad 306. (MSV)

NORTECH Geotechnical/Civil Consultants, Ltd.

FIELD CONSTRUCTION INSPECTION REPORT

PROJECT PSC Environmental JOB NO. 14441-28C

LOCATION 2095 Newlands Drive, Fernley, Nevada REPORT NO. 6

CONTRACTOR L & H Concrete WEEK ENDING 03-02-13

Work Description

Tank 306 →

February 25 - I inspected steel reinforcement in tank slab 306 Rebar was placed in accordance with structural details on approved plans. I was on site for concrete pour on tank slab. I cast one set of concrete cylinders and performed one slump test. (MSV)

" →

February 26 - Transported previously cast cylinders to the laboratory for proper curing and testing. (MSV)

February 27 - On site to inspect placement of twenty four 3/4" x 6-3/4" embed all thread anchor bolts at tank support to slab connections for tank 301. Contractor drilled holes to proper embed depths and has cleaned holes thoroughly with a wire brush and air compressor. I observed placement of bolts and Hilti Epoxy. Project was completed in accordance with detail 7/TS1.4 on approved plans. (MEV)

February 28 - Inspected placement of four 3/4" x 6-3/4" epoxy set all thread anchor bolts for cable support to tank frame for tank 301. Contractor drilled holes to proper embed depths and has cleaned holes thoroughly. I observed placement of Hilti Epoxy and bolts. Project was completed in accordance with detail from approved plans. (MEV)

NORTECH Geotechnical/Civil Consultants, Ltd.

FIELD CONSTRUCTION INSPECTION REPORT

PROJECT PSC Environmental JOB NO. 14441-28C

LOCATION 2095 Newlands Drive, Fernley, Nevada REPORT NO. 7

CONTRACTOR L & H Concrete WEEK ENDING 03-09-13

Work Description

March 5 - I performed an epoxy dowel inspection for seismic anchors to support tank on pad 306. Contractor installed 54 dowels (all thread) (6 per anchor) to a 9" embedment. I inspected holes for cleanliness as contractor blew and brushed holes and embedment depth. Hilti epoxy was used with an expiration date of October 2013 and were set in accordance with manufacturers recommendation. All work was done in accordance with detail 3 on page TS1.3 of approved plans with no deviations. (CLM)

NORTECH
GEOTECHNICAL/CIVIL CONSULTANTS, LTD. 300 Western Road, #8, Reno, NV 89506 (775) 852-7478 FAX (775) 852-7488

REPORT OF CONCRETE CYLINDER TEST

Project Number: 14441-28C
Project: PSC Environmental
Client: Equipment Pro, Inc.
Address: 721 Parkwood Dr., Ste. Genevieve, MO 63670

Report Number: 5

Attn:

FIELD TEST CONDITIONS AND RESULTS (ASTM C31)

Date Placed: 2/25/2013
Time Sampled: 7:45 AM
Location of Sample: Tank Slab, 306
Supplier: 3D
Truck Number: 483
Mix Number: 1125RPC
Design Strength: 4000 psi
Time Batched: 6:50 AM
Batch Size: 8 yds.
Slump: 4 in. (ASTM C 143)
Concrete Temp: 69 °F
Water Added: 0 gal.

Ticket Number: 37414

Time Placed: 7:45 AM

Air Content: N/A % (ASTM C 173)
Ambient Temp: 30 °F
Technician: MSV

LABORATORY TEST RESULTS (ASTM C39)

Specimen	Test Date	Age	Load	Diameter	Area	Strength	Percent of Design	Type of Fracture
645	3/4/2013	7	49810	4.00	12.57	3960		1
646	3/25/2013	28		4.00	12.57			
647	3/25/2013	28		4.00	12.57			
648	3/11/2013	14	58420	4.00	12.57	4650		1

Remarks:

Copies to:

TYPES OF FRACTURE

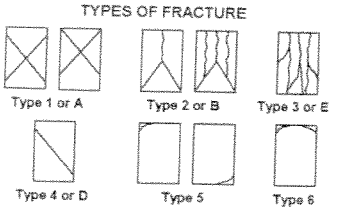

Reported by:

Kent Seegmiller
Concrete Laboratory Manager

TANK INSPECTION FORM

OWNER: Philip Services Corporation / 21 EMI
PSC Fernley Facility
2095 Newlands Drive East
Fernley, NV 89408
(775)575-2760

TANK NO.: 306, 12,500 gallon flat-bottom

TANK SHELL INSPECTION

Date Inspected: March 7, 2013

Findings: Minor Scratches near Piping

TANK ANCHORAGE STRUCTURAL OBSERVATION

Type of Anchorage System: Jaik Choi Calcs/Snyder Industries Drawings

Date Inspected: March 7, 2013

# of Anchor Plates/Tie-downs: 8 Plates / 4 Tie Downs

AB Type, Diameter, Spacing and Number/plate: 1"ø A.B., 6 Per plate

Size of Anchor Plate & Contact with Tank: Per Drawing B-2468B By Snyder Industr

Edge Distances: 6"@ Notch, 10" Min @ Other Locations

Special Inspection Completed? Yes

TANK LEAKAGE TEST

Date Filled: March 7, 2013, 3:00 pm

Water Level below Inspection Hatch: 19" Below Bottom Lip

Date of Re-inspection: March 8, 2013

Water Level below Inspection Hatch: 19" below bottom lip

Shell Leakage? No / No

Leakage on Floor/Drain Pan at Manifold? No / No

INSPECTOR: Brian Lee **DATE:** 3/7/2013

INSPECTOR: Terence Tobey **DATE:** Mar. 8, 2013

PROCESS PIPING INSPECTION FORM

Philip Services Corporation / 21 EMI
PSC Fernley Facility
2095 Newlands Drive East
Fernley, NV 89408
(775)575-2760

Tank Number: 306

Date Inspected: April 3, 2013

Fill Line Assembly:

Number of Fill Line Assemblies: 1 Fill Line Assembly

Description: A bulkhead fitting at the top of the tank is the only permanent piping in the fill line assembly. A temporary fill line is attached to the bulkhead fitting. There was no damage to the process pipe connection or to the tank shell. No evidence of leaking found. The permanent piping is secured and stable.

Discharge Line Assembly:

Number of Discharge Line Assemblies: 2 Discharge Line Assemblies

Description: The bulkhead fitting to the threaded valve connection is the only permanent piping in the discharge line assembly. A temporary discharge line is attached to the valve connection. There was no damage to the process piping connection or to the tank shell. No evidence of leaking found. The permanent piping is secured and stable.

INSPECTOR: Brian Gr DATE: April 3, 2013

tobey wade
STRUCTURAL ENGINEERS

August 7, 2013
Project No. R405-13-13

Ms. Tracy Buono
Facility/Operations Manager
PSC FERNLEY FACILITY
2095 Newlands Drive East
Fernley, NV 89408

RE: TANK 306 CERTIFICATION

Dear Ms. Buono:

In accordance with the Fernley Facility Amended Tank Replacement Plan dated December 17, 2012, and Appendix D-6 of the pending July 2012 RECRA Permit, each new tank is required to be certified by Independent Registered Professional Engineers (IRPE's) prior to being placed into service. This letter has been prepared to document the evaluation of Tank 306 as performed by Tobey-Wade Consulting.

Background

Tank 306 is a virgin linear polyethylene tank as manufactured by Snyder Industries, Inc. and it has a 12,500 gallon capacity. Snyder Industries has provided data relative to the tank's strength.

Jaik Choi Associates conducted a stability analysis and designed anchorage for the tank. Tobey-Wade Consulting evaluated the existing foundation and designed a new reinforced concrete pad based on loads provided by Jaik Choi Associates.

Certification of the tank shell's compatibility with the proposed waste stream has been provided by others.

Findings

Based on our evaluation, the following systems are hereby certified as being in compliance with the Amended Tank Replacement plan:

- Tank 306 has sufficient strength to contain the proposed waste materials without rupturing, based on wall thickness information provided by Snyder Industries.

- Tank 306 will be situated on a reinforced concrete foundation system which is capable of adequately supporting the tank and its contents under static and dynamic conditions.

- Tank 306 will be located in an area with sufficient secondary containment as required by 40 CFR Ch. I, 264.193.

- Tank 306 is anchored to resist overturning when subjected to site-specific loads 2006 International Building Code level seismic events based on the analysis performed by Jaik Choi Associates.

- Tank 306 is anchored to prevent sliding when subjected to site-specific 2006 International Building Code level seismic events based on the analysis performed by Jaik Choi Associates.

- The process piping fill and discharge connections have been inspected and found to be undamaged and with no evidence of leakage. The piping connections are adequately attached to the tank to prevent displacement during an earthquake. The associated Process Piping inspection form is attached.

- Special Inspection of the epoxy anchor bolt installation was performed as required by the International Building Code. Copies of the Special Inspection reports are attached.

- Tank 306 has been subjected to a 24-hour leak test and found to be watertight. The Tank Leakage Test results are included in the Tank Inspection Form, copy attached.

- The exterior of Tank 306's shell wall has been inspected and found to be undamaged. The Tank Shell Inspection results are included in the Tank Inspection Form, copy attached.

Tobey-Wade Consulting witnessed the tank leakage test and conducted the tank shell inspection, under my direct supervision. Special Inspections were performed by inspectors from Nortech Consultants based on anchorage requirements provided by Jaik Choi Associates.

Certification Statement

I certify under penalty of law that this report and all attachments were prepared under my direction and supervision in accordance with a system developed to assure that qualified personnel properly gather and evaluate the information submitted. Based on my inquiry of the person or persons who manage the system or those persons directly responsible for gathering the information, the information, submitted is, to the best of my knowledge and belief, true, accurate, and complete. I am aware that there are significant penalties for submitting false information, including the possibility of fines and imprisonment for knowing violations.

This report has been prepared in accordance with accepted engineering practices and is subject to the assumptions and limitations stated in the report. Also note that this certification covers the aforementioned aspects of Tank 306 only.

Please feel free to contact me at your convenience should you have any questions relating to our findings.

Sincerely,
TOBEY-WADE CONSULTING

Terrence R. Tobey

TERRENCE R. TOBEY, P.E., S.E.
Principal Structural Engineer

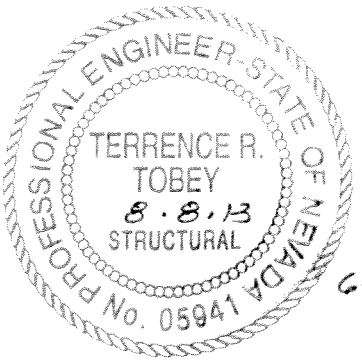

Exp. 6-30-14

NORTECH Geotechnical/Civil Consultants, Ltd.

FIELD CONSTRUCTION INSPECTION REPORT

PROJECT PSC Environmental JOB NO. 14441-28C

LOCATION 2095 Newlands Drive, Fernley, Nevada REPORT NO. 5

CONTRACTOR L & H Concrete WEEK ENDING 02-23-13

Work Description

February 23 - On site for epoxy inspection on concrete slab dowels (vertical #4 and horizontal (#'6's). Holes were drilled to proper embed depth, 4" for #4 dowels and 6-3/4" for #6 dowels and were cleaned thoroughly. Epoxy dowels were placed in accordance with structural details on approved plans. Epoxy and dowels were placed for tank pad 306. (MSV)

NORTECH Geotechnical/Civil Consultants, Ltd.

FIELD CONSTRUCTION INSPECTION REPORT

PROJECT PSC Environmental JOB NO. 14441-28C

LOCATION 2095 Newlands Drive, Fernley, Nevada REPORT NO. 6

CONTRACTOR L & H Concrete WEEK ENDING 03-02-13

Work Description

February 25 - I inspected steel reinforcement in tank slab 306 Rebar was placed in accordance with structural details on approved plans. I was on site for concrete pour on tank slab. I cast one set of concrete cylinders and performed one slump test. (MSV)

February 26 - Transported previously cast cylinders to the laboratory for proper curing and testing. (MSV)

February 27 - On site to inspect placement of twenty four 3/4" x 6-3/4" embed all thread anchor bolts at tank support to slab connections for tank 301. Contractor drilled holes to proper embed depths and has cleaned holes thoroughly with a wire brush and air compressor. I observed placement of bolts and Hilti Epoxy. Project was completed in accordance with detail 7/TS1.4 on approved plans. (MEV)

February 28 - Inspected placement of four 3/4" x 6-3/4" epoxy set all thread anchor bolts for cable support to tank frame for tank 301. Contractor drilled holes to proper embed depths and has cleaned holes thoroughly. I observed placement of Hilti Epoxy and bolts. Project was completed in accordance with detail from approved plans. (MEV)

NORTECH Geotechnical/Civil Consultants, Ltd.

FIELD CONSTRUCTION INSPECTION REPORT

PROJECT PSC Environmental JOB NO. 14441-28C

LOCATION 2095 Newlands Drive, Fernley, Nevada REPORT NO. 7

CONTRACTOR L & H Concrete WEEK ENDING 03-09-13

Work Description

March 5 - I performed an epoxy dowel inspection for seismic anchors to support tank on pad 306. Contractor installed 54 dowels (all thread) (6 per anchor) to a 9" embedment. I inspected holes for cleanliness as contractor blew and brushed holes and embedment depth. Hilti epoxy was used with an expiration date of October 2013 and were set in accordance with manufacturers recommendation. All work was done in accordance with detail 3 on page TS1.3 of approved plans with no deviations. (CLM)

NORTECH
GEOTECHNICAL/CIVIL CONSULTANTS, LTD. 3001 Western Road, #8, Reno, NV 8950... (775) 851-7475 FAX (775) 852-...

REPORT OF CONCRETE CYLINDER TEST

Project Number: 14441-28C
Project: PSC Environmental
Client: Equipment Pro, Inc.
Address: 721 Parkwood Dr., Ste. Genevieve, MO 63670

Report Number: 5

Attn:

FIELD TEST CONDITIONS AND RESULTS (ASTM C31)

Date Placed: 2/25/2013
Time Sampled: 7:45 AM
Location of Sample: Tank Slab, 306
Supplier: 3D
Truck Number: 483
Mix Number: 1125RPC
Design Strength: 4000 psi
Time Batched: 6:50 AM
Batch Size: 8 yds.
Slump: 4 in. (ASTM C 143)
Concrete Temp: 69 °F
Water Added: 0 gal.

Ticket Number: 37414

Time Placed: 7:45 AM

Air Content: N/A % (ASTM C 173)
Ambient Temp: 30 °F
Technician: MSV

LABORATORY TEST RESULTS (ASTM C39)

Specimen	Test Date	Age	Load	Diameter	Area	Strength	Percent of Design	Type of Fracture
645	3/4/2013	7	49810	4.00	12.57	3960		1
646	3/25/2013	28		4.00	12.57			
647	3/25/2013	28		4.00	12.57			
648	3/11/2013	14	58420	4.00	12.57	4650		1

Remarks:

Copies to:

TYPES OF FRACTURE

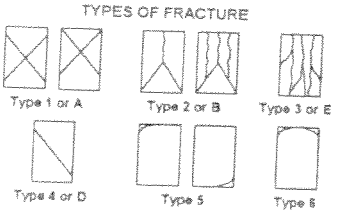

Reported by: Kent Seegmiller
Concrete Laboratory Manager

TANK INSPECTION FORM

OWNER: Philip Services Corporation / 21 EMI
PSC Fernley Facility
2095 Newlands Drive East
Fernley, NV 89408
(775)575-2760

TANK NO.: 306, 12,500 gallon flat-bottom

TANK SHELL INSPECTION

Date Inspected: March 7, 2013

Findings: Minor Scratches near Piping

TANK ANCHORAGE STRUCTURAL OBSERVATION

Type of Anchorage System: Jaik Choi Calcs/Snyder Industries Drawings

Date Inspected: March 7, 2013

# of Anchor Plates/Tie-downs: 8 Plates / 4 Tie Downs

AB Type, Diameter, Spacing and Number/plate: 1"ø A.B., 6 Per plate

Size of Anchor Plate & Contact with Tank: Per Drawing B-2468B By Snyder Industri

Edge Distances: 6"@ Notch, 10" Min @ Other Locations

Special Inspection Completed? Yes

TANK LEAKAGE TEST

Date Filled: March 7, 2013, 3:00 pm

Date of Re-inspection: March 8, 2013

Shell Leakage? No / No

Leakage on Floor/Drain Pan at Manifold? No / No

Water Level below Inspection Hatch: 19" Below Bottom Lip

Water Level below Inspection Hatch: 19" below Bottom Lip

INSPECTOR: Brent [illegible] DATE: 3/7/2013

INSPECTOR: Terence Tobey DATE: Mar. 8, 2013

PROCESS PIPING INSPECTION FORM

Philip Services Corporation / 21 EMI
PSC Fernley Facility
2095 Newlands Drive East
Fernley, NV 89408
(775)575-2760

Tank Number: 306

Date Inspected: April 3, 2013

Fill Line Assembly:

Number of Fill Line Assemblies: 1 Fill Line Assembly

Description: A bulkhead fitting at the top of the tank is the only permanent piping in the fill line assembly. A temporary fill line is attached to the bulkhead fitting. There was no damage to the process pipe connection or to the tank shell. No evidence of leaking found. The permanent piping is secured and stable.

Discharge Line Assembly:

Number of Discharge Line Assemblies: 2 Discharge Line Assemblies

Description: The bulkhead fitting to the threaded valve connection is the only permanent piping in the discharge line assembly. A temporary discharge line is attached to the valve connection. There was no damage to the process piping connection or to the tank shell. No evidence of leaking found. The permanent piping is secured and stable.

INSPECTOR: Brian Gr DATE: April 3, 2013

030913

AlltanksCom LLC
PO 680474 - Houston, Texas 77268
281.825.4000 – 281.825.4099
gene@alltanks.com

Terrence Tobey,

648 Lander Street Reno,

Nv 89509

Based on the following information, I certify that the tank design and tanks made of virgin linear polyethylene as manufactured by Snyder Industries are suitable for the storage of chemistry as indicated below, in the waste processing stream of the PSC Facility in Fernley NV.

My research indicates that relative to the structural suitability and chemical compatibility of the 100% linear polyethylene tanks, Tank No# 301-307, as fabricated by Snyder, these tanks are approved for long time storage of the below solutions at temperatures up to 150°F.

Alkaline – pH 8-14:

Acids typically less than 20% - pH – 0-6:

Neutral solutions - pH 4-10:

Bleach solutions - pH 11-12:

I have reviewed Snyder Company's product information provided on tank design and compatibility with the information submitted by PSC.

Thanks

Gene Vincent, President

AlltanksCom LLC

PO 680474

JAIK CHOI & ASSOCIATES
Structural Engineering
1215 PORTSIDE WAY
CCORONA DEL MAR, CA 92625
(949) 706-7789 Fax (424) 239-2666
email:jcse@msn.com

Structural Calculations for

Seismic Restraint System for
Ground Supported Storage Tanks (6500 gal Flat, 12500 gal Flat & 7400 gal Cone w/ S.G.=1.4)
Located at PSC Fernley, 2095 Newlands Drive, E, Fernley, NV 89408

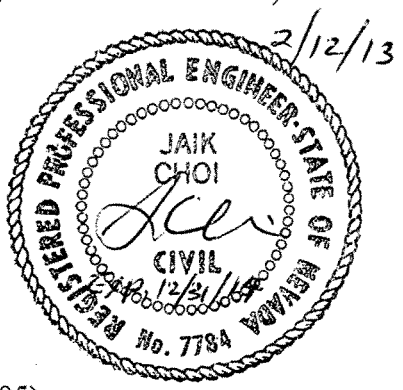

2/12/13

Prepared for

AlltanksCom LLC
Equipment Pro Inc.

Design Criterion

1. Codes	; International Building Code 2006 Edition. ; California Building Code 2007 Edition. (ASCE 7.05) ; AISC 13th Edition.
2. Steel	: ASTM A-36 for angles & plates.
3. Cable	; 7x19 Galv. Steel or Type 304 or 316 S.S.
4. Bolts	; Hilti HAS-E Rod Standard or equal
5. Epoxy Adhesive	; Hilti HIT-RE500SD
6. Concrete	; f'c = 4,000 psi @ 28 days for footings.
7. Reinforcing	; ASTM A615-60
8. Soil	; Assumed minimum allowable bearing value = 1,500 psf @ 12" depth

Index

	Page
1. 6500 gal. and 12500 gal. Flat Bottom Tanks	4-10
2. 7400 gal. Cone Bottom Tank	11-16

Appendix

1. Tank Data and Calculations for Anchorage types
2. Calculations for Capacity of Connectors
3. Anchor Bolts ICBO Report (ESR-2322)

Jaik Choi Associates
Structural Engineering
(949)706-7789, Fax;(424)239-2666
email;jcse@msn.com

Snyder Industries

Lincoln, NE

SII Vertical Ground Supported Tanks (flat bottom)

A) Design Lateral Loads Calculations

Per 2006 IBC/2007 CBC Code (ASCE 7-05 Sect 15.7.6)

1) Seismic loads **Seismic Design Category "D"**

Design Seismic Coeff. Zip Code **89408** (Fernley, NV)

Site Class	D	Table 1613.5.2
Input Fa	1.00	Table 1613.5.3(1)
Input Fv	1.50	Table 1613.5.3(2)
Input Ss	**1.34**	Figure 1613.5(1)
Input S1	**0.53**	Figure 1613.5(2)
Input I	1.5	ASCE 7-Table 11.5-1
Input R	3.0	ASCE 7-Table 15.4-1

Hc; Height of tank content
Hr;Height of tank roof
Ht; Height of tank top
Dt; Diameter of tank
We; Empty Weight of tank
Wc; Content Weight in tank
Wt; Total Weight of tank
SG; Specific Gravity
Pw; Wind Load

Critical Tank Data (Part # 5350) **12500** gals.

Max. Hr	15.45 ft.
Max. D	11.83 ft.
We	3100 lbs
Wc	104175 lbs
S.G.	**1.4**

3.68H/D = 4.81 Tanh(3.68H/D)= **1.00** **manually**
Tc=2*phi*(D/3.68g*tanh(3.68H/D))^2 = 1.98 sec.
Sms =Fa*Ss = 1.335
Sm1 =Fv*S1 = 0.797
Sds =2*Sms/3= 0.890 = Sai Sloshing portion **25** %
Sd1 =2*Sm1/3= 0.531
Ts =Sd1/Sds= 0.60 sec.
Sac=1.5Sd1/Tc= 0.40
Vi =Sai*I*Wi/R= 0.445 Wi Wi = We+0.75*Wc 112484 lbs.
Vc =Sac*I*Wc/1.5= 0.401 Wc Wc = .25*Wc/100 36461 lbs.

Seismic Load = (Vi*Wi+Vc*Wc)/(We+Wc*S.G.) = **0.434** W

Design Load Fp (seis.) = **0.434 W per 2009 IBC/2010 CBC Code governs**

2) Wind loads 110 mph

Desgin loads = **Wind = Qz =.00256KzKztKdV^2I**
Qz = **41.52** psf

Design Wind Coeff.

Input	Kz	1.03	Sect.6.5.6.6 Table 6-3
Input	Kzt	1.37	Sect.6.5.7.2 Figure 6.4
Input	Kd	0.95	Sect.6.5.4.4 Table 6-4
Input	I	1.00	ASCE 7-Table 11.5-1

Pw = Qz*Tank Dia.*Ht
Mot = Pw*Ht/2
Up or Down Ld./conn. = Mot/Dt
Uplift/conn.= Up Ld.- .5*We

B) Tank Data and Anchorage types

See Section "D" (the Calculations for the Capacity of Anchorages at Concrete)

SHT. # 2
J.N. 12-932A
DATE 12/20/12
BY: J.C.

Project Name = All tanks-Equip. Pro-Fernley, NV
Date = Thu Dec 20 08:55:53 PST 2012

Conterminous 48 States
2003 NEHRP Seismic Design Provisions
Zip Code = 89408
Spectral Response Accelerations Ss and S1
Ss and S1 = Mapped Spectral Acceleration Values
Data are based on a 0.01 deg grid spacing

Period (sec)	Centroid Sa (g)	
0.2	1.335	(Ss)
1.0	0.531	(S1)

Period (sec)	Maximum Sa (g)	
0.2	1.509	(Ss)
1.0	0.615	(S1)

Period (sec)	Minimum Sa (g)	
0.2	0.803	(Ss)
1.0	0.298	(S1)

Conterminous 48 States
2003 NEHRP Seismic Design Provisions
Zip Code = 89408
Spectral Response Accelerations SMs and SM1
SMs = Fa x Ss and SM1 = Fv x S1
Site Class D

Period (sec)	Centroid Sa (g)	
0.2	1.335	(SMs, Fa = 1.000)
1.0	0.796	(SM1, Fv = 1.500)

Period (sec)	Maximum Sa (g)	
0.2	1.509	(SMs, Fa = 1.000)

Jaik Choi Associates
Structural Engineering
(949)706-7789, Fax:(424)239-2666
email:jcse@msn.com

Snyder Industries

Lincoln, NE

1) BASE ANCHORAGE

INPUT PARAMETERS — **ANCHORAGE CONN.**

PART NUMBER	TANK SIZE (GAL.)	TANK DIA. (FT.)	Hc (FT.)	Hr (FT.)	Ht (FT.)	We (LBS.)	Wc (LBS.)	Wind Pw (LBS.)	Wind CONN. TYPE	SEIS. (SG=1.4) (LBS.)	SEIS. (SG=1.4) CONN. TYPE
7140--	6500	10.00	11.59	11.85	12.64	1450	54171	5249		77289	4-6D4
5350--	12500	11.83	15.12	15.45	16.45	3100	104175	8081		148945	8-4D4

2) CABLE ANCHORAGE

Safety Factor (S.F.) = 2 / R.F./ A.F. = 2.0

R.F. = 0.75 (Reduction factor due to possible elastic stretch)
A.F. = 1.33 (Adjust factor due to duration of loads)

CABLE SIZE	BREAK STRENGTH	LOOP STRENGTH W/S.F.= 2.0
0.25	6400	6400
0.375	12000	12000
0.5	21600	21600
0.625	33600	33600
0.75	48000	48000

CABLE IS 7 X 19 304 SERIES SS

Mot = Vseis.*Cg
Up or Down Ld./conn. = Mot/Ds
Uplift/conn.= Up Ld.- .5*Wef
Wef = 50% of Wt effect. for holdown

INPUT PARAMETERS — **CABLE CONN.**

PART NUMBER	TANK SIZE (GAL.)	TANK DIA. (FT.)	Hr (FT.)	Wt (LBS.)	No. of Anchor WIND	No. of Anchor SG1.5	No. of Anchor Sg1.9	WIND UPLIFT (LBS.)	WIND CABLE SIZE	SEIS. (SG=1.4) (LBS.)	SEIS. (SG=1.4) CONN. TYPE
7140--	6500	10.00	11.85	55621	4	4	4	2592	1/4"	-20858	none
5350--	12500	11.83	15.45	107275	4	4	4	4068	1/4"	-40228	none

Jaik Choi Associates
Structural Engineering
(949)706-7789, Fax:(424)239-2666
email; jcse@msn.com

Snyder Industries

Lincoln, NE

C) FOUNDATION DESIGN

SII Vertical Ground Supported Tank (flat bottom)

Desgin loads = Vs = 0.434 W

Hc; Height of tank content
Ht; Height of tank top
We; Empty Weight of tank
Wc; Content Weight in tank
Wt; Total Weight of tank
Wf; Footing Weight
SG; Specific Gravity
Fd; Footing Diameter
Fe; Footing Edge Distance
Ft; Footing Thickness
Mf; Moment in the footing
Mot; Overturning Moment
Mr; Resisting Moment
F.S.; Factor of Safety for Overturning
SL; Sliding resistance
Fa; Soil bearing value (Direct)
Fb; Soil bearing value (Overturing)
Fs; Soil bearing value (Total)
b; Soil reaction resultant location
Sf; Section Modulus of footing
As; Area of reinforcing steel required

Design Parameter

Allow. Bearing "Fb"=	1500 psf x 1.33 =	1995 psf
Passive Pressure "Pp"=	250 psf x 1.33 =	332.5 psf
Friction Coeff. = u =	0.3	

1) Overturning

Mot = Vs*Hc/2
Total Dl.(TD) = W + Wt. Ftg.
Mresist (Mr) = TD*.5*Fw
Factor of Safety "F.S."=Mr/Mot = **> 1.5**

2) Sliding of Foundation

Load = Fp = Vs
Resist = u*Total Dl.+ Passive Pressure
SL > Vs

3) Soil Bearing

Result @ (Mr-Mot)/TD="b"
Fa = (Wt + Wf) / (.785*Fd^2)
Fb = (Wt + Wf)*(.5*Fd-b)/Sf
Fs = (Fa + Fb) psf < 1995 O.K.

Design for Specific gravity (SG) = 1.4

INPUT PARAMETERS **FOUNDATION SIZES**

PART NUMBER	TANK SIZE (GAL.)	TANK DIA. (FT.)	Hc (FT.)	Ht (FT.)	We (LBS.)	Wc (LBS.)	Wt (LBS.)	Fe (FT.)	Fd (FT.)	Ft (FT.)	b (FT.)	Wf (LBS.)
7140--	6500	10.00	11.59	12.64	1450	75839	77289	2.00	14.00	1.00	4.73	23079
5350--	12500	11.83	15.12	16.45	3100	145845	148945	2.75	17.33	1.50	5.76	53046

RESULTS **SOIL BEARING & FOOTING REINFORCING**

PART NUMBER	Vs (LBS.)	SL (LBS.) > Vs	Mot (ft-k)	Mr (ft-k)	F.S. > 1.5	Fa psf	Fb psf	Fs psf	Mf ft.-k	As in2	Reinf. Size	in. o.c.
7140--	33569	31155	228.1	703	3.08	652	847	1499	2.84	0.14	# 4 @	17
5350--	64691	64541	586.1	1750	2.99	857	1147	2004	7.12	0.20	# 4 @	12

Jaik Choi Associates
Structural Engineering
(949)706-7789, Fax;(424)239-2666
email;jcse@msn.com

Snyder Industries

Lincoln, NE

SII Vertical Ground Supported Tanks (flat bottom)

A) Design Lateral Loads Calculations

Per 2006 IBC/2007 CBC Code (ASCE 7-05 Sect 15.7.6)

1) Seismic loads — **Seismic Design Category "D"**

Design Seismic Coeff. Zip Code **89408** (Fernley, NV)

Site Class	D	Table 1613.5.2
Input Fa	1.00	Table 1613.5.3(1)
Input Fv	1.50	Table 1613.5.3(2)
Input Ss	**1.34**	Figure 1613.5(1)
Input S1	**0.53**	Figure 1613.5(2)
Input I	1.5	ASCE 7-Table 11.5-1
Input R	3.0	ASCE 7-Table 15.4-1

Hc; Height of tank content
Hr;Height of tank roof
Ht; Height of tank top
Dt; Diameter of tank
We; Empty Weight of tank
Wc; Content Weight in tank
Wt; Total Weight of tank
SG; Specific Gravity
Pw; Wind Load

Critical Tank Data (Part # 5350) **12500** gals.

Max. Hr	15.45 ft.
Max. D	11.83 ft.
We	3100 lbs
Wc	104175 lbs
S.G.	**1.4**

3.68H/D = 4.81 Tanh(3.68H/D)= **1.00** manually
Tc=2*phi*(D/3.68g*tanh(3.68H/D))^2 = 1.98 sec.

Sms =Fa*Ss =	1.335			
Sm1 =Fv*S1 =	0.797			
Sds =2*Sms/3=	0.890	= Sai	Sloshing portion	**25** %
Sd1 =2*Sm1/3=	0.531			
Ts =Sd1/Sds=	0.60	sec.		
Sac=1.5Sd1/Tc=	0.40			
Vi =Sai*I*Wi/R=	0.445	Wi	Wi = We+0.75*Wc 112484	lbs.
Vc =Sac*I*Wc/1.5=	0.401	Wc	Wc = .25*Wc/100 36461	lbs.

Seismic Load = (Vi*Wi+Vc*Wc)/(We+Wc*S.G.) = 0.434 W

Design Load Fp (seis.) = 0.434 W per 2009 IBC/2010 CBC Code governs

2) Wind loads 110 mph

Desgin loads = Wind = Qz =.00256KzKztKdV^2I
Qz = 41.52 psf

Pw = Qz*Tank Dia.*Ht
Mot = Pw*Ht/2
Up or Down Ld./conn. = Mot/Dt
Uplift/conn.= Up Ld.- .5*We

Design Wind Coeff.

Input	Kz	1.03	Sect.6.5.6.6 Table 6-3
Input	Kzt	1.37	Sect.6.5.7.2 Figure 6.4
Input	Kd	0.95	Sect.6.5.4.4 Table 6-4
Input	I	1.00	ASCE 7-Table 11.5-1

B) Tank Data and Anchorage types

See Section "D" (the Calculations for the Capacity of Anchorages at Concrete)

Jaik Choi Associates
Structural Engineering
(949)706-7789, Fax:(424)239-2666
email; jcse@msn.com

Snyder Industries

Lincoln, NE

For Part #7140, use 14'-0" dia. x 6" thick house-keeping conc. (4,000) pad on top of existing 6" slab Reinf. w/ #4 @ 12" each way at center-Use Sikadur32 bonding agent between existing and new

For Part #5350, use 17'-4" dia. x 12" thick house-keeping conc. (4,000) pad on top of existing 6" slab Reinf. w/ #4 @ 12" ea. way at 3" from the top-Use Sikadur32 bond'g agent between existing and new

Jaik Choi Associates
Structural Engineering
(949)706-7789, Fax;(424)239-2666
email; jcse@msn.com

Snyder Industries

Lincoln, NE

D) Structural Calculations for the Capacity of Anchorage at Concrete

Seismic V= 0.434 W

1) Unity for Comb. Loading (Shear + Tension)

Bolts= ASTM A 36

Shear/bolt = V/Nb
Tension/bolt = Moment/anc. Spacing = V*Hp/2/Sa
Unity = 1.33 = V/Nb/S + .5*V*Hp/Sa/T/Nb
V = 1.33*Nb*T*S/ (T + .5*S*Hp/Sa) for 1 or 2 bolts
V = 1.33*Nb*T*S/ (T + S*Hp/Sa) for 4 bolts

T= Tension capacity of bolt
S= Shear capacity of bolt
Sa= Anc. spacing or .8*(bolt dist. from edge)
Sb= Anc. spacing btwn stiffners
Hp= Height of back plate
Nb= Number of bolts per conn.

2) Load reduction factors due to anchor bolt spacing

=.7 + .3*(Sa - .5Ed)/Ed

		Bolt Spacing (inches)						
Bolt Size	Ed (Embed.)	1.5 Ed	.5Ed	5	6.5	8	6.5+8	6.5+6.5+8
1/2"	6	9.00	3.00	0.800	0.875	0.950	0.831	0.727
5/8"	7.5	11.25	3.75	0.750	0.810	0.870	0.705	0.571
3/4"	6.75	10.13	3.38	0.772	0.839	0.906	0.760	0.637
1"	9	13.50	4.50	0.717	0.767	0.817	0.626	0.480
1" L	12	18.00	6.00	0.675	0.713	0.750	0.534	0.381

3) Allowable tension and shear values in normal wt. Concrete (ICC #ESR2322))

ASTM A36	2,000 psi conc.				4,000 psi conc.			
	Tension		Shear		Tension		Shear	
Bolt Size	Concrete	Steel	Concrete	Steel	Concrete	Steel	Concrete	Steel
1/2"	4775	3755	6080	1935	5380	3755	8600	1935
5/8"	7320	5870	9505	3025	7515	5870	13440	3025
3/4"	8670	8455	8390	4355	10755	8455	11865	4355
1"	13845	15030	14915	7745	17365	15030	21095	7745
1" L	17935	15030	24325	7745	17935	15030	34405	7745

ASTM A193-B7	2,000 psi conc.				4,000 psi conc.			
	Tension		Shear		Tension		Shear	
Bolt Size	Concrete	Steel	Concrete	Steel	Concrete	Steel	Concrete	Steel
1/2"	4775	8100	6080	4170	5380	8100	8600	4170
5/8"	7320	12655	9505	6520	7515	12655	13440	6520
3/4"	8670	18225	8390	9390	10755	18225	11865	9390
1"	13845	32400	14915	16690	17365	32400	21095	16690
1" L	17935	32400	24325	16690	17935	32400	34405	16690

ASTM 304SS	2,000 psi conc.				4,000 psi conc.			
	Tension		Shear		Tension		Shear	
Bolt Size	Concrete	Steel	Concrete	Steel	Concrete	Steel	Concrete	Steel
1/2"	4775	6480	6080	3335	5380	6480	8600	3335
5/8"	7320	10125	9505	5215	7515	10125	13440	5215
3/4"	8670	12390	8390	6385	10755	12390	11865	6385
1"	13845	22030	14915	11350	17365	22030	21095	11350
1" L	17935	22030	24325	11350	17935	22030	34405	11350

4) Stiffness Plate thickness based on allowable bearing & shear stresses

Allowable bearing stress =Fbrg = 1.2 * Fu = 1.2*58*1.33 = 92.57 ksi

Jaik Choi Associates
Structural Engineering
(949)706-7789, Fax;(424)239-2666
email; jcse@msn.com

Snyder Industries

Lincoln, NE

Allowable shearing stress = Fv = 0.4 * Fy = 0.4*36*1.33 = 19.15 ksi
Edge distance of bolt= 1.75 inches Effect. For shear = 1.75"-1.25"/2 = 1.125 inches

1/4" Plate thick.		
Cable Size	Allow.shear	Allow. Brg.
0.25	10.77	5.79
0.375	10.77	8.68
0.5	10.77	11.57
0.625	10.77	14.46

3/8" Plate thick.		
Cable Size	Allow.shear	Allow. Brg.
0.25	16.16	8.68
0.375	16.16	13.02
0.5	16.16	17.36
0.625	16.16	21.70

5) Maximum plate thickness based on allow. conc. bearing stresses
Allowable concrete bearing stress = .6*fc'*1.33 =

	f'c=	2,000	4,000 psi
	Fc=	1600	3200 psi

Conn. Type	2 bolts	4 bolts	6 bolts	Fc (psi)
Max. pl. thk.	0.667	0.514	0.408	for 1600
Max. pl. thk.	0.943	0.727	0.578	for 3200

Base plate length to calculate plate thickness (Pl. thk.)

Conn. Type	2 bolts	4 bolts	6 bolts	
Angle length ("L")	8	10	16	inches
Min. edge dist.	6	8	8	inches

6) Allowable total tank weight (Wt) **=Max. Vs/ 0.434**

For f'c = 2,000 psi Concrete

Conn. Type	# of Anchors	Sa	Hp	Tension (lbs)	Shear (lbs)	Max. Vs (kips)	Tank Wt. (kips)	Pl. thk. (inch)
4-2A	(4) 2- 1/2" dia.	3	3.5	3755	1935	3.96	9.11	0.267
4-2B	(4) 2- 5/8" dia.	3	3.5	5490	3025	6.09	14.02	0.331
4-2C	(4) 2- 3/4" dia.	3	3.5	6695	4355	8.40	19.34	0.389
4-2D	(4) 2- 1" dia.	3	3.5	9922	7745	14.16	32.59	0.505
4-4A	(4) 4- 1/2" dia.	8	4	3755	1935	8.19	18.85	0.106
4-4B	(4) 4- 5/8" dia.	8	4	5158	3025	12.44	28.65	0.131
4-4C	(4) 4- 3/4" dia.	8	6	6586	4355	15.49	35.66	0.179
4-4D	(4) 4- 1" dia.	8	6	8669	7745	24.67	56.80	0.226
4-6A	(4) 6- 1/2" dia.	8	4	3473	1935	12.08	27.81	0.165
4-6B	(4) 6- 5/8" dia.	8	4	4178	3025	17.72	40.81	0.199
4-6C	(4) 6- 3/4" dia.	8	6	5525	4355	21.84	50.29	0.271
4-6D	(4) 6- 1" dia.	8	6	6646	7745	32.98	75.93	0.333
8-4A	(8) 4- 1/2" dia.	8	4	3755	1935	19.76	45.49	0.106
8-4B	(8) 4- 5/8" dia.	8	4	5158	3025	30.04	69.17	0.131
8-4C	(8) 4- 3/4" dia.	8	6	6586	4355	37.39	86.08	0.179
8-4D	(8) 4- 1" dia.	8	6	8669	7745	59.56	137.12	0.226
8-6B	(8) 6- 5/8" dia.	8	4	4178	3025	42.79	98.51	0.199
8-6C	(8) 6- 3/4" dia.	8	6	5525	4355	52.72	121.39	0.271
8-6D	(8) 6- 1" dia.	8	6	6646	7745	79.61	183.30	0.333
8-6E	(8) 6- 1" L.dia.	8	6	6829	7745	80.62	185.62	0.335

For f'c = 4,000 psi Concrete

Conn. Type	# of Anchors	Sa	Hp	Tension	Shear	Max. Vs	Tank Wt.	Pl. thk.

Jaik Choi Associates
Structural Engineering
(949)706-7789, Fax;(424)239-2666
email; jcse@msn.com

Snyder Industries

Lincoln, NE

Job No. 12-932A
Date; 12/20/12
By J. Choi

				(lbs)	(lbs)	(kips)	(kips)	(inch)
4-2A4	(4) 2- 1/2" dia.	3	3.5	3755	1935	3.96	9.11	0.267
4-2B4	(4) 2- 5/8" dia.	3	3.5	5870	3025	6.19	14.24	0.334
4-2C4	(4) 2- 3/4" dia.	3	3.5	8455	4355	8.91	20.51	0.401
4-2D4	(4) 2- 1" dia.	3	3.5	12445	7745	15.11	34.80	0.522
4-4A4	(4) 4- 1/2" dia.	8	4	3755	1935	8.19	18.85	0.106
4-4B4	(4) 4- 5/8" dia.	8	4	5870	3025	12.80	29.46	0.133
4-4C4	(4) 4- 3/4" dia.	8	6	8455	4355	16.71	38.48	0.186
4-4D4	(4) 4- 1" dia.	8	6	10872	7745	26.86	61.83	0.235
4-6A4	(4) 6- 1/2" dia.	8	4	3755	1935	12.28	28.27	0.166
4-6B4	(4) 6- 5/8" dia.	8	4	5870	3025	19.19	44.19	0.207
4-6C4	(4) 6- 3/4" dia.	8	6	8455	4355	25.07	57.72	0.187
4-6D4	(4) 6- 1" dia.	8	6	10872	7745	40.28	92.75	0.368
4-6E4	(4) 6- 1" L.dia.	8	6	9584	7745	38.48	88.60	0.360
8-4A4	(8) 4- 1/2" dia.	8	4	3755	1935	19.76	45.49	0.106
8-4B4	(8) 4- 5/8" dia.	8	4	5870	3025	30.89	71.12	0.133
8-4C4	(8) 4- 3/4" dia.	8	6	8455	4355	40.34	92.89	0.186
8-4D4	(8) 4- 1" dia.	8	6	10872	7745	64.83	149.26	0.235
8-6A4	(8) 6- 1/2" dia.	8	4	3755	1935	29.64	68.24	0.166
8-6B4	(8) 6- 5/8" dia.	8	4	5870	3025	46.33	106.68	0.207
8-6C4	(8) 6- 3/4" dia.	8	6	8455	4355	60.52	139.33	0.290
8-6D4	(8) 6- 1" dia.	8	6	10872	7745	97.24	223.89	0.368
8-6E4	(8) 6- 1" L.dia.	8	6	9584	7745	92.90	213.88	0.360

ASTM A 193- Grade B7 **(4,000 psi)**

Conn. Type	# of Anchors	Sa	Hp	Tension (lbs)	Shear (lbs)	Max. Vs (kips)	Tank Wt. (kips)	Pl. thk. (inch)
4-6D4(B7)	(4) 6- 1" dia.	8	6	10872	13208	55.15	126.98	0.431
4-6E4(B7)	(4) 6- 1" L.dia.	8	6	9584	13099	51.62	118.85	0.417
8-4A4(B7)	(8) 4- 1/2" dia.	8	4	5380	4170	38.60	89.34	0.148
8-4B4(B7)	(8) 4- 5/8" dia.	8	4	5296	6520	51.83	119.97	0.172
8-4C4(B7)	(8) 4- 3/4" dia.	8	6	8170	9390	64.76	149.92	0.235
8-4D4(B7)	(8) 4- 1" dia.	8	6	10872	13208	88.76	205.45	0.275
8-6A4(B7)	(8) 6- 1/2" dia.	6	4	5380	4170	52.96	122.60	0.342
8-6B4(B7)	(8) 6- 5/8" dia.	8	4	5296	6520	77.74	179.96	0.269
8-6D4(B7)	(8) 6- 1" dia.	8	6	10872	9023	107.13	248.00	0.386
8-6E4(B7)	(8) 6- 1"L.dia.	8	6	9584	13099	124.61	288.44	0.417

AISI 304 SS- Condition CW **(4,000 psi)**

Conn. Type	# of Anchors	Sa	Hp	Tension (lbs)	Shear (lbs)	Max. Vs (kips)	Tank Wt. (kips)	Pl. thk. (inch)
8-4A4(SS)	(8) 4- 1/2" dia.	8	4	5380	3335	32.70	75.68	0.136
8-4B4(SS)	(8) 4- 5/8" dia.	8	4	5296	5215	44.88	103.88	0.160
8-4C4(SS)	(8) 4- 3/4" dia.	8	6	8170	6385	51.70	119.67	0.210
8-4D4(SS)	(8) 4- 1" dia.	8	6	10872	13208	88.76	205.45	0.275
8-6A4(SS)	(8) 6- 1/2" dia.	8	4	5380	3335	49.04	113.53	0.213
8-6B4(SS)	(8) 6- 5/8" dia.	8	4	5296	5215	67.32	155.82	0.250

Jaik Choi Associates
Structural Engineering
(949)706-7789, Fax;(424)239-2666
email; jcse@msn.com

Snyder Industries

Lincoln, NE

8-6C4(SS)	(8) 6- 3/4" dia.	8	6	8170	6385	77.55	179.51	0.329
8-6D4(SS)	(8) 6- 1" dia.	8	6	10872	10126	114.84	265.84	0.400
8-6E4(SS)	(8) 6- 1" L.dia.	8	6	9584	13099	124.61	288.44	0.417

Jaik Choi Associates
Structural Engineering
(949)706-7789, Fax;(424)239-2666
email;jcse@msn.com

Snyder

Lincoln, NE

Vertical Ground Supported Tanks (Cone bottom)

A) Design Lateral Loads Calculations

Per 2006 IBC/2007 CBC Code

1) Seismic loads — **Seismic Design Category "D"**

Design Seismic Coeff. — Zip Code **89408** (Fernley, NV)

Site Class	D	Table 1613.5.2
Input Fa	1.00	Table 1613.5.3(1)
Input Fv	1.50	Table 1613.5.3(2)
Input Ss	**1.335**	2003 NEHRP (USGS Web)
Input S1	**0.531**	2003 NEHRP (USGS Web)
Input I	1.5	ASCE 7-Table 11.5-1
Input R	3.0	ASCE 7-Table 15.4-1

Hcb; Height of Cone Bottom
Hct; Height of Cone Top
Ht; Height of tank top
Hcg; Height of center of gravity
Dt; Diameter of tank
We; Empty Weight of tank
Wc; Content Weight in tank
Wt; Total Weight of tank
SG; Specific Gravity
Pw; Wind Load

Critical Tank Data (Part #5320000N) 7400 gals.

Max. Hr	14.79	ft.
Max. D	11.83	ft.
We	1200	lbs
Wc	61672	lbs
S.G.	**1.4**	

3.68H/D = 4.60 Tanh(3.68H/D)= **1.00** **manually**
Tc=2*phi*(D/3.68g*tanh(3.68H/D))^2 = 1.98 sec.

Sms =Fa*Ss =	1.335				
Sm1 =Fv*S1 =	0.797				
Sds =2*Sms/3=	0.890	= Sai	Sloshing	**25**	%
Sd1 =2*Sm1/3=	0.531				
Ts =Sd1/Sds=	0.60	sec.			
Sac=1.5Sd1/Tc=	0.40				
Vi =Sai*I*Wi/R=	0.445	Wi	Wi = We+0.75*Wc	65955	lbs.
Vc =Sac*I*Wc/1.5=	0.401	Wc	Wc = .25*Wc/100	21585	lbs.

Seismic Load = (Vi*Wi+Vc*Wc)/(We+Wc*S.G.) = 0.434 W

Design Load Fp (seis.) = 0.434 **W per 2009 IBC/2010 CBC Code governs**

2) Wind loads 110 mph

Desgin loads = Wind = Qz =.00256KzKztKdV^2I
Qz = 31.27 psf

Design Wind Coeff.

Input	Kz	0.85	Sect.6.5.6.6 Table 6-3
Input	Kzt	1.00	Sect.6.5.7.2 Figure 6.4
Input	Kd	0.95	Sect.6.5.4.4 Table 6-4
Input	I	1.25	ASCE 7-Table 11.5-1

Pw = Ww*Tank Dia.*Ht
Mot = Pw*Ht/2
Up or Down Ld./conn. = Mot/Dt
Uplift/conn.= Up Ld.- .5*We

B) Tank Data and Anchorage types

See Section "D" (the Calculations for the Capacity of Anchorages at Concrete)

Jaik Choi Associates
Structural Engineering
(949)706-7789, Fax;(424)239-2666
email;jcse@msn.com

Snyder

Lincoln, NE

1) BASE ANCHORAGE

INPUT PARAMETERS

ANCHORAGE CONN.

PART NUMBER	TANK SIZE (GAL.)	TANK DIA. (FT.)	Hcb (FT.)	Hct (FT.)	Ht (FT.)	We (LBS.)	Wc (LBS.)	Wind Pw (LBS.)	Wind CONN. TYPE	SEIS. (SG=1.4) (LBS.)	SEIS. CONN. TYPE
5320000N	7400	11.83	2.00	5.25	13.36	1200	86340	4942		38014	8-3/4" dia.

8 -3/4" dia. Hilti HVA good for 8*4,355*1.33 = 46,337 # > 38014 O.K.

2) CABLE ANCHORAGE

Safety Factor (S.F.) = 2 / R.F./ A.F. = 2.0

R.F. = 0.75 (Reduction factor due to possible elastic stretch)
A.F. = 1.33 (Adjust factor due to duration of loads)

CABLE SIZE	BREAK STRENGTH	LOOP STRENGTH W/S.F.= 2.0
0.25	6400	6400
0.375	12000	12000
0.5	21600	21600
0.625	33600	33600
0.75	48000	48000

CABLE IS 7 X 19 304 SERIES SS

Mot = Vseis.*Cg
Up or Down Ld./conn. = Mot/Ds
Uplift/conn.= Up Ld.- .5*Wef
Wef = 50% of Wt effect. for holdown

INPUT PARAMETERS

CABLE CONN.

PART NUMBER	TANK SIZE (GAL.)	TANK DIA. (FT.)	Hcg (FT.)	Wt (LBS.)	No. of Anchor WIND	SG1.2	Sg1.4	WIND UPLIFT (LBS.)	WIND CABLE SIZE	SEIS. (SG=1.4) (LBS.)	SEIS. CONN. TYPE
5320000N	7400	11.83	9.06	87540	4	4	4	-600	none	-26045	none

No Uplift

Jaik Choi Associates
Structural Engineering
(949)706-7789, Fax:(424)239-2666
email; jcse@msn.com

Snyder

Lincoln, NE

Structural Calculations for the footing supporting tank

C) FOUNDATION DESIGN

Vertical Ground Supported Tank (Cone bottom)

Desgin loads = Vs = 0.434 W

Hc; Height of tank content
Ht; Height of tank top
We; Empty Weight of tank
Wc; Content Weight in tank
Wt; Total Weight of tank
Wf; Footing Weight
SG; Specific Gravity
Fd; Footing Diameter
Fe; Footing Edge Distance
Ft; Footing Thickness
Mf; Moment in the footing
Mot; Overturning Moment
Mr; Resisting Moment
F.S.; Factor of Safety for Overturning
SL; Sliding resistance
Fa; Soil bearing value (Direct)
Fb; Soil bearing value (Overturing)
Fs; Soil bearing value (Total)
b; Soil reaction resultant location
Sf; Section Modulus of footing
As; Area of reinforcing steel required

Design Parameter

Allow. Bearing "Fb"=	1500 psf x 1.33 =	1995 psf
Passive Pressure "Pp"=	250 psf x 1.33 =	332.5 psf
Friction Coeff. = u =	*0.4*	

1) Overturning

Mot = Vs*Hc/2
Total Dl.(TD) = W + Wt. Ftg.
Mresist (Mr) = TD*.5*Fw
Factor of Safety "F.S."=Mr/Mot = **> 1.5**

2) Sliding of Foundation

Load = Fp = Vs
Resist = u*Total Dl.+ Passive Pressure
SL > Vs

3) Soil Bearing

Result @ (Mr-Mot)/TD="b"
Fa = (Wt + Wf) / (.785*Fd^2)
Fb = (Wt + Wf)*(.5*Fd-b)/Sf
Fs = (Fa + Fb) psf < 1995 O.K.

Design for Specific gravity (SG) = 1.4

Footing width = 14.50 ft.
Saddle dist. = 8.30 ft.

INPUT PARAMETERS / **FOUNDATION SIZES**

PART NUMBER	TANK SIZE (GAL.)	TANK DIA. (FT.)	Hcg (FT.)	Ht (FT.)	We (LBS.)	Wc (LBS.)	Wt (LBS.)	Fe (FT.)	Fd (FT.)	Ft (FT.)	b (FT.)	Wf (LBS.)
5320000N	7400	11.83	9.06	13.36	1200	86340	87540	1.33	14.49	1.00	3.84	24723

RESULTS / **SOIL BEARING & FOOTING REINFORCING**

PART NUMBER	Vs (LBS.)	SL (LBS.) > Vs	Mot (ft-k)	Mr (ft-k)	F.S. > 1.5	Fa psf	Fb psf	Fs psf	Mf ft.-k	As in2	Reinf. Size	in. o.c.
5320000N	38014	45987	382.4	813	2.13	681	1280	1962	3.59	0.19	# 4 @	13

Jaik Choi Associates
Structural Engineering
(949)706-7789, Fax:(424)239-2666
email; jcse@msn.com

Snyder

Lincoln, NE

For Part #5320000N, use 14'-6" dia. x 6" thick house-keeping conc. (4,000) pad on top of existing 6" slab Reinf. w/ #4 @ 12" each way at center-Use Sikadur32 bonding agent between existing and new

Jaik Choi Associates
Structural Engineering
(949)706-7789, Fax;(424)239-2666
email; jcse@msn.com

Snyder

Lincoln, NE

D) Structural Calculations for the Capacity of Anchorage at Concrete

Seismic V= 0.434 W

1) Unity for Comb. Loading (Shear + Tension)

Bolts= ASTM A 36

Shear/bolt = V/Nb
Tension/bolt = Moment/anc. Spacing = V*Hp/2/Sa
Unity = 1.33 = V/Nb/S + .5*V*Hp/Sa/T/Nb
V = 1.33*Nb*T*S/ (T + .5*S*Hp/Sa) for 1 or 2 bolts
V = 1.33*Nb*T*S/ (T + S*Hp/Sa) for 4 bolts

T= Tension capacity of bolt
S= Shear capacity of bolt
Sa= Anc. spacing or .8*(bolt dist. from edge)
Sb= Anc. spacing btwn stiffners
Hp= Height of back plate
Nb= Number of bolts per conn.

2) Load reduction factors due to anchor bolt spacing

=.7 + .3*(Sa - .5Ed)/Ed

				Bolt Spacing (inches)				
Bolt Size	Ed (Embed.)	1.5 Ed	.5Ed	5	6.5	8	6.5+8	6.5+6.5+8
1/2"	6	9.00	3.00	0.800	0.875	0.950	0.831	0.727
5/8"	7.5	11.25	3.75	0.750	0.810	0.870	0.705	0.571
3/4"	6.75	10.13	3.38	0.772	0.839	0.906	0.760	0.637
1"	9	13.50	4.50	0.717	0.767	0.817	0.626	0.480
1" L	12	18.00	6.00	0.675	0.713	0.750	0.534	0.381

3) Allowable tension and shear values in normal wt. Concrete (ICC #ESR2322)

ASTM A36	2,000 psi conc.				4,000 psi conc.			
	Tension		Shear		Tension		Shear	
Bolt Size	Concrete	Steel	Concrete	Steel	Concrete	Steel	Concrete	Steel
1/2"	4775	3755	6080	1935	5380	3755	8600	1935
5/8"	7320	5870	9505	3025	7515	5870	13440	3025
3/4"	8670	8455	8390	4355	10755	8455	11865	4355
1"	13845	15030	14915	7745	17365	15030	21095	7745
1" L	17935	15030	24325	7745	17935	15030	34405	7745

ASTM A193-B7	2,000 psi conc.				4,000 psi conc.			
	Tension		Shear		Tension		Shear	
Bolt Size	Concrete	Steel	Concrete	Steel	Concrete	Steel	Concrete	Steel
1/2"	4775	8100	6080	4170	5380	8100	8600	4170
5/8"	7320	12655	9505	6520	7515	12655	13440	6520
3/4"	8670	18225	8390	9390	10755	18225	11865	9390
1"	13845	32400	14915	16690	17365	32400	21095	16690
1" L	17935	32400	24325	16690	17935	32400	34405	16690

ASTM 304SS	2,000 psi conc.				4,000 psi conc.			
	Tension		Shear		Tension		Shear	
Bolt Size	Concrete	Steel	Concrete	Steel	Concrete	Steel	Concrete	Steel
1/2"	4775	6480	6080	3335	5380	6480	8600	3335
5/8"	7320	10125	9505	5215	7515	10125	13440	5215
3/4"	8670	12390	8390	6385	10755	12390	11865	6385
1"	13845	22030	14915	11350	17365	22030	21095	11350
1" L	17935	22030	24325	11350	17935	22030	34405	11350

4) Stiffness Plate thickness based on allowable bearing & shear stresses

Allowable bearing stress =Fbrg = 1.2 * Fu = 1.2*58*1.33 = 92.57 ksi

Jaik Choi Associates
Structural Engineering
(949)706-7789, Fax;(424)239-2666
email; jcse@msn.com

Snyder

Lincoln, NE

Allowable shearing stress = Fv = 0.4 * Fy = 0.4*36*1.33 = 19.15 ksi

Edge distance of bolt= 1.75 inches Effect. For shear = 1.75"-1.25"/2 = 1.125 inches

JAIK CHOI & ASSOCIATES
STRUCTURAL ENGINEERING
23177 LA CADENA DRIVE, #101
LAGUNA HILLS, CALIFORNIA 92653
(949) 951-2522

ALL TANKS

SHEET NO. 17 OF
JOB. NO. 12-932
DATE 1/4/13
BY J.C.

STRUCTURAL CALCULATIONS FOR HOR. SHEAR CONN. BTWN EXIST'G & NEW CONC.

1.

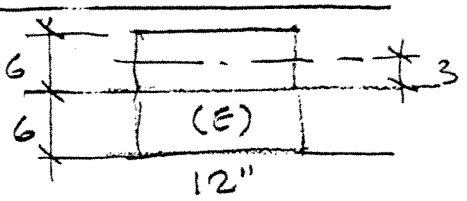

$I = 12 \times 12^3/12 = 1728$

$Q = 12 \times 6 \times 3 = 216$

$\frac{Q}{I} = .125$

2.

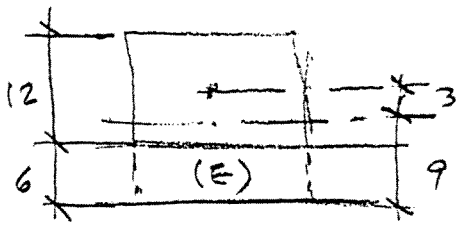

$I = 12 \times 18^3/12 = 5832$

$Q = 12 \times 12 \times 3 = 432$

$\frac{Q}{I} = .074$

3.

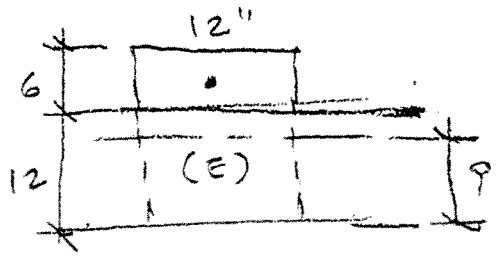

$I = 5832$

$Q = 12 \times 6 \times 6 = 432$

$\frac{Q}{I} = .074$

$\frac{VQ}{I} = .125\,V$

FOOTING DIA. = 17.33'

$A_{FTG.} = \pi \times 17.33^2/4 = 235.76$

$W_t = 148945 + 53046 = 202^K$

UNIF. $W_t = 202/235.76 = .857\ ^K/_{0'}$

LOC. OF ZERO SHEAR = $.857/.116 = 7.4'$

TOTAL $V = 1.143 \times 9.9/2 = 5.66^K$

$\frac{VQ}{I} = .125 \times 5.66 = .707\ K/ft$

USING HILTI HIT RE 500
5/8" Ø W/ 2 3/8" EMBED. (GOOD FOR 5245#)
SPACING REQ'D $5.245/.707 = 7.42'$

USE 4'-0" O/C

CRIT. TANK = 12500 GAL.

$A = \frac{\pi \times 11.83^2}{4} = 110\ \square'$

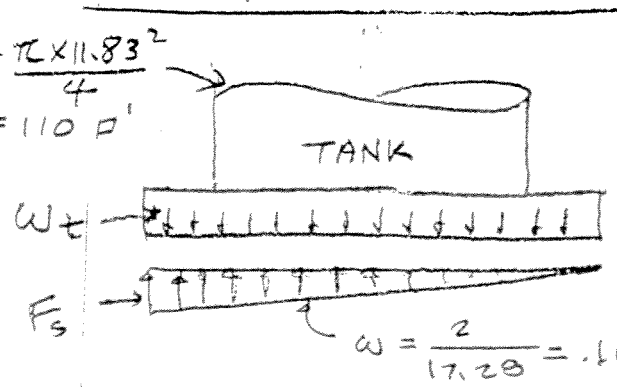

PRESSURE DIAG.

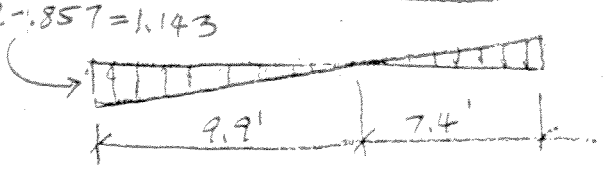

SHEAR DIAG.

HIT-RE 500 Epoxy Adhesive Anchoring System 4.2.7

HIT-RE 500 Allowable and Ultimate Bond/Concrete Capacity for HAS Rods in Normal Weight Concrete[1,2,3,4]

Anchor Diameter in (mm)	Embedment Depth in (mm)	HIT-RE 500 Allowable Bond/Concrete Capacity				HIT-RE 500 Ultimate Bond/Concrete Capacity			
		Tensile		Shear		Tensile		Shear	
		f'_c = 2000 psi (13.8 MPa) lb (kN)	f'_c = 4000 psi (27.6 MPa) lb (kN)	f'_c = 2000 psi (13.8 MPa) lb (kN)	f'_c = 4000 psi (27.6 MPa) lb (kN)	f'_c = 2000 psi (13.8 MPa) lb (kN)	f'_c = 4000 psi (27.6 MPa) lb (kN)	f'_c = 2000 psi (13.8 MPa) lb (kN)	f'_c = 4000 psi (27.6 MPa) lb (kN)
3/8 (9.5)	1-3/4 (44)	645 (2.9)	1095 (4.9)	1510 (6.7)	2135 (9.5)	2580 (11.5)	4370 (19.4)	4530 (20.2)	6405 (28.4)
	3-3/8 (86)	2190 (9.7)	2585 (11.5)	3155 (14.0)	4460 (19.8)	8760 (39.0)	10345 (46.0)	9460 (42.1)	13380 (59.5)
	4-1/2 (114)	2420 (10.8)	2585 (11.5)	4855 (21.6)	6860 (30.5)	9685 (43.1)	10335 (46.0)	14560 (64.8)	20580 (91.5)
1/2 (12.7)	2-1/4 (57)	1130 (5.0)	1965 (8.7)	2510 (11.2)	3550 (15.8)	4530 (20.2)	7860 (35.0)	7525 (33.4)	10640 (47.3)
	4-1/2 (114)	4045 (18.0)	5275 (23.5)	5610 (25.0)	7935 (35.3)	16185 (72.0)	21095 (93.8)	16820 (74.8)	23800 (105.9)
	6 (152)	4775 (21.2)	5380 (23.9)	8635 (38.4)	12210 (54.3)	19095 (84.9)	21520 (95.7)	25900 (115.2)	36620 (162.9)
5/8 (15.9)	2-7/8 (73)	1690 (7.5)	3045 (13.5)	5245 (23.3)	7420 (33.0)	6770 (30.1)	12175 (54.2)	15735 (70.0)	22250 (99.0)
	5-5/8 (143)	6560 (29.2)	7355 (32.7)	8760 (39.0)	12395 (55.1)	26240 (116.7)	29420 (130.9)	26280 (116.9)	37180 (165.4)
	7-1/2 (190)	7320 (32.6)	7515 (33.4)	13615 (60.6)	19080 (84.9)	29290 (130.3)	30060 (133.7)	40840 (180.1)	57240 (254.6)
3/4 (19.1)	3-3/8 (86)	2310 (10.3)	4515 (20.1)	7335 (32.6)	10370 (46.1)	9250 (41.1)	18065 (80.4)	22000 (97.9)	31108 (138.4)
	6-3/4 (172)	8670 (38.6)	10755 (47.8)	12615 (56.1)	17840 (79.4)	34685 (154.3)	43020 (191.4)	37840 (168.3)	53520 (238.1)
	9 (229)	10385 (46.2)	12995 (57.8)	19430 (86.4)	27470 (122.2)	41535 (184.8)	51985 (231.3)	58280 (259.2)	82400 (366.5)
7/8 (22.2)	4 (101)	3005 (13.4)	5665 (25.2)	7795 (34.7)	11020 (49.0)	12030 (53.5)	22670 (100.8)	23375 (104.0)	33050 (147.0)
	7-7/8 (200)	12495 (55.6)	15875 (70.6)	17175 (76.4)	24290 (108.0)	49975 (222.3)	63495 (282.5)	51520 (229.2)	72860 (324.1)
	10-1/2 (267)	14705 (65.4)	16185 (72.0)	26440 (117.6)	37390 (166.3)	58820 (261.7)	64730 (287.9)	79320 (352.8)	112160 (498.9)
1 (25.4)	4-1/2 (114)	3945 (17.5)	8440 (37.5)	10035 (44.6)	14190 (63.1)	15790 (70.2)	33765 (150.2)	30104 (133.9)	42565 (189.4)
	9 (229)	13845 (61.6)	17365 (77.2)	22435 (99.8)	31720 (141.1)	55380 (246.4)	69465 (309.0)	67300 (299.4)	95160 (423.3)
	12 (305)	17935 (79.8)	17935 (79.8)	34535 (153.6)	48830 (217.2)	71740 (319.1)	71740 (319.1)	103600 (460.8)	146480 (651.6)
1-1/4 (31.8)	5-5/8 (143)	5760 (25.6)	12815 (57.0)	14760 (65.7)	20870 (92.8)	23045 (102.5)	51270 (228.1)	44280 (196.9)	62610 (278.5)
	11-1/4 (286)	24610 (109.5)	31620 (140.7)	35050 (155.9)	49570 (220.5)	98430 (437.9)	126480 (562.6)	105140 (467.7)	148710 (661.4)
	15 (381)	34130 (151.8)	35270 (156.9)	53960 (240.0)	76300 (339.4)	136525 (607.3)	141090 (627.6)	161880 (720.1)	228900 (1018.2)

1 Influence factors for spacing and/or edge distance are applied to concrete/bond values above, and then compared to the steel value. The lesser of the values is to be used for the design.

2 Average ultimate concrete shear capacity based on Concrete Capacity Design (CCD) method for standard and deep embedment and based on testing for shallow embedment.

3 All values based on holes drilled with carbide bit and cleaned with brush per manufacturer's instructions. Ultimate tensile concrete/bond loads represent the average values obtained in testing.

4 For underwater applications up to 165 feet/50m depth reduce the tabulated concrete/bond values 30% to account for reduced mechanical properties of saturated concrete.

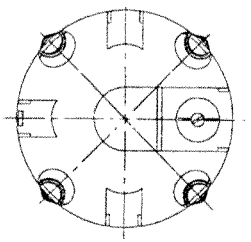

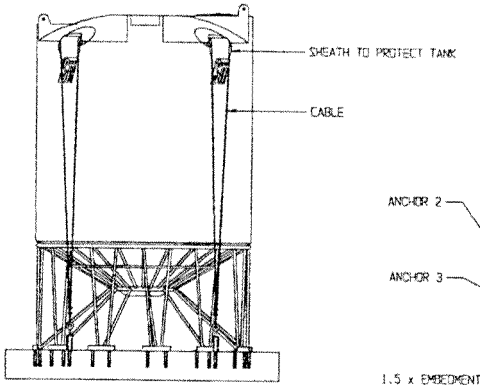

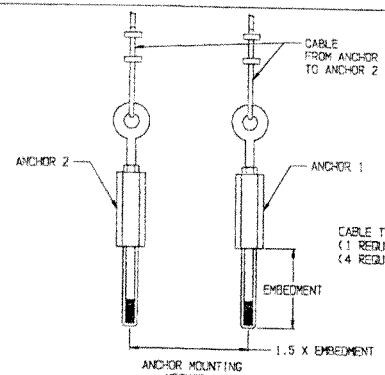

ANCHOR MOUNTING METHOD "B" FOR 3/8 CABLE

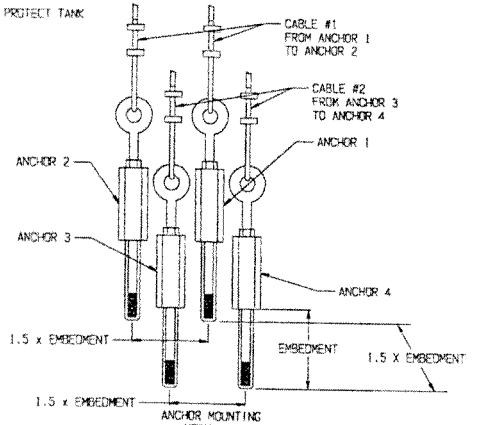

ANCHOR MOUNTING METHOD "C" FOR 2 EACH 1/4 OR 3/8 CABLE

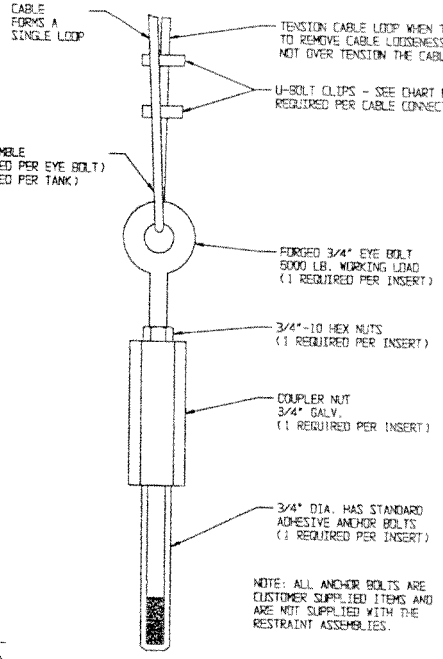

NOTE: ALL ANCHOR BOLTS ARE CUSTOMER SUPPLIED ITEMS AND ARE NOT SUPPLIED WITH THE RESTRAINT ASSEMBLIES.

ANCHOR MOUNTING METHOD "A" FOR 1/4 CABLE

CABLE SIZE (INCHES)	TURNBUCKLE SIZE (INCHES)	MINIMUM # OF CLIPS REQD	AMOUNT OF CABLE TURN BACK (INCHES)	TORQUE IN FT. LBS.
1/4	1/4	3	4-3/4	15
5/16	5/16	3	6-1/2	30
3/8	3/8	3	11-1/2	45
1/2	1/2	3	13	65
5/8	5/8	4	15	130

* USE TURNBUCKLE TORQUE VALUES SHOWN ARE BASED UPON THE THREADS BEING CLEAN, DRY, AND FREE OF CORROSION.

CODES:
CBC 2007, IBC 2006, API 650, ASCE 7.05, AND AISC 13TH EDITION

SEISMIC DESIGN:
Zip Code = 92701, Site class D - Fa=1.0, Fv=1.5,
Sds = 1.105, Sd1 = 0.597, I = 1.5, R = 3.0
Fp=(Sds X I x W1/R) X 0.7 X 0.8 = 0.31 W

WIND DESIGN:
IBC/CBC - 150 MPH
Qz = 0.00256KzKztKdV^2I = 58.14 PSF
(Kz = 0.85, Kzt = 1.0, Kd = 0.95, I = 1.25)

GENERAL:
1. ALL CONSTRUCTION MUST MEET LOCAL BUILDING CODE REQUIREMENTS AND BE APPROVED BY THE CONSTRUCTION SITE ENGINEER.
2. THESE GUIDELINES HAVE BEEN PROVIDED TO SPECIFY THE RESTRAINT RECOMMENDATIONS FOR SNYDER INDUSTRY CONE BOTTOM BULK STORAGE TANKS.

CONCRETE MATERIAL:
1. CONCRETE SHALL ATTAIN A MINIMUM ULTIMATE 28 DAY COMPRESSIVE STRENGTH OF Fc=3000 PSI.

CONCRETE REINFORCEMENT:
1. REINFORCING STEEL SHALL CONFORM TO THE REQUIREMENTS OF ASTM A615 GRADE 40 (Fy 40,000 PSI.) AND/OR WELDED WIRE FABRIC PER ASTM A185.
2. LAP ALL BARS A MINIMUM OF 40 BAR DIAMETERS. LAP WIRE FABRIC 6" MINIMUM.
3. MINIMUM COVER FOR REINFORCING BARS SHALL BE AS FOLLOWS:
   - 3" FOR CONCRETE DEPOSITED DIRECTLY AGAINST EARTH.
   - 2" FOR CONCRETE DEPOSITED IN FORMS.
4. CONCRETE PAD DESIGN SHOULD BE COMPLETED BY THE CONSTRUCTION SITE ENGINEER BASED ON SPECIFIC APPLICATION.

STRUCTURAL STEEL:
1. ALL STRUCTURAL STEEL COMPONENTS SHALL BE NEW AND OF BASIC OPEN HEARTH PROCESS STEEL CONFORMING TO ALL APPLICABLE REQUIREMENTS OF ASTM A500, A513, ANSI 1020, AND ANSI 1026 (DEPENDS ON STRUCTURAL SHAPE).
2. ALL ARC WELDING ELECTRODES SHALL CONFORM TO ASTM A233 FOR STEEL ARC WELDING ELECTRODES. ELECTRODES SHALL BE AS RECOMMENDED BY THE MANUFACTURES FOR THE POSITIONS AND OTHER CONDITIONS OF ACTUAL USE. WELDING SHALL CONFORM TO REQUIREMENTS OF AMERICAN WELDING SOCIETY ANS D1.21.
3. ALL SHARP EDGES AND CORNERS SHALL BE REMOVED ON ALL STRUCTURAL STEEL COMPONENTS.
4. CABLES TO BE 7X19 STRANDED CORE CONSTRUCTION SIZED PER CHART. MATERIAL TO BE SPECIFIED BY CUSTOMER ORDER (MINIMUM BREAKING STRENGTH EQUAL TO OR GREATER THAN 304 SS RATING).
5. ANCHOR BOLTS TO BE HILTI ADHESIVE ANCHORS, MODEL HVA WITH SIZE AND MATERIAL AS SPECIFIED PER SPECIFICATION CHART. ALL 1/2" DIA. HVA ANCHORS TO HAVE 4-1/4" EMBEDMENT. ALL 3/4" DIA. HVA ANCHORS TO HAVE 6-5/8" EMBEDMENT. ALL 1" DIA. HVA ANCHORS TO HAVE 8-1/4" EMBEDMENT. EMBEDMENT MUST BE PER MANUFACTURER'S RECOMMENDATION. NO ALLOWANCE HAS BEEN MADE FOR LESS THAN FULL EMBEDMENT. ALL OTHER FASTENER MATERIALS MUST CORRESPOND TO THE TYPE OF ANCHOR SELECTED.

TANK SIZE (GALLONS)	TANK DIAMETER (INCHES)	1.9 SPECIFIC GRAVITY FLUID STAND REQUIRED	STAND ANCHOR BOLTS REQUIRED	CABLE SIZE	CABLE METHOD	TOTAL # TIE DOWN ANCHOR BOLTS	TOTAL # TIE DOWN CABLES
500	64	78800000	8 EA. 1/2" DIA. HAS STANDARD	1/4	A	4	4
500	86	79000000	8 EA. 1/2" DIA. HAS STANDARD	1/4	A	4	4
1000	64	78800000	8 EA. 1/2" DIA. HAS STANDARD	1/4	A	4	4
1000	86	79000000	8 EA. 1/2" DIA. HAS STANDARD	1/4	A	4	4
1400	86	79900000	8 EA. 1/2" DIA. HAS STANDARD	1/4	A	4	4
1500 1.6 SG	64	78800000	8 EA. 1/2" DIA. HAS STANDARD	1/4	A	4	4
1500 1.9 SG	64	78800100	8 EA. 1/2" DIA. HAS STANDARD	1/4	A	4	4
1650	86	79900000	8 EA. 1/2" DIA. HAS STANDARD	1/4	A	4	4
2000	90	79300000	24 EA. 3/4" DIA. HAS STANDARD	1/4	A	4	4
2500	90	79300000	24 EA. 3/4" DIA. HAS STANDARD	1/4	A	4	4

TANK SIZE (GALLONS)	TANK DIAMETER (INCHES)	1.9 SPECIFIC GRAVITY FLUID STAND REQUIRED	STAND ANCHOR BOLTS REQUIRED	CABLE SIZE	CABLE METHOD	TOTAL # TIE DOWN ANCHOR BOLTS	TOTAL # TIE DOWN CABLES
2500	90	79400000	24 EA. 3/4" DIA. HAS STANDARD	1/4	A	4	4
3000	90	79300000	24 EA. 3/4" DIA. HAS STANDARD	1/4	A	4	4
3900	90	79800000	24 EA. 3/4" DIA. HAS STANDARD	1/4	C	16	8
4100	90	79900000	24 EA. 3/4" DIA. HAS STANDARD	3/8	C	16	8
4400	90	79800000	24 EA. 3/4" DIA. HAS STANDARD	3/8	C	16	8
6000	142	79500000	24 EA. 1" DIA. HAS STANDARD	1/4	A	4	4
7400	142	79500000	24 EA. 3/4" DIA. HAS STANDARD	1/4	A	4	4
11500	142	79500100	24 EA. 1" DIA. HAS STANDARD	1/4	A	4	4
13000	142	79500100	24 EA. 1" DIA. HAS STANDARD	3/8	C	16	8

SNYDER INDUSTRIES INC.

LINCOLN, NE 68504

SCALE: NONE	APPROVED BY: D.A.D.	DRAWN BY: M. Foten
DATE: 12/07/93		REVISED: 11/20/08

S.I.I. CONE BOTTOM TANK RESTRAINT RECOMMENDATIONS

DRAWING NO. 8-3182C, PAGE 1 OF 1

2/12/13

REGISTERED PROFESSIONAL ENGINEER - STATE OF NEBRASKA - No. 7784 - JAMES C. HOLTZ - CIVIL

NOTES:

1. REFER TO CALCULATION PACKAGE FOR ADDITIONAL INFORMATION. PAD DIAMETER (Fd) AND PAD THICKNESS (Ft) PER CALCULATION PACKAGE.
2. ALL CONSTRUCTION TECHNIQUES SHALL CONFORM TO ASCE-7.05, IBC 2009.
3. CONCRETE SHALL OBTAIN A MINIMUM ULTIMATE 28 DAY COMPRESSIVE STRENGTH OF Fc = 4000 PSI OR 2000 PSI U.N.O. (SEE CHART BELOW).
4. REINFORCING STEEL SHALL CONFORM TO THE REQUIREMENTS OF ASTM A615 GRADE 60, Fy = 60,000 PSI.
5. MINIMUM COVER FOR REINFORCING BARS SHALL BE 2" ON THE TOP, 3" ON THE SIDES AND BOTTOM OF THE PAD AS SHOWN.
6. PAD IS ASSUMED TO BE PLACED ON A COMPACTED LEVEL SURFACE WITH AN ALLOWABLE SOIL BEARING VALUE OF 1500 PSF. THIS IS THE MAXIMUM ASSUMED SOIL BEARING ALLOWED WITHOUT SITE INSPECTION. IF SITE INSPECTION IS AVAILABLE, PAD DIMENSIONS COULD BE DECREASED. PLEASE CONSULT WITH LOCAL CIVIL ENGINEER FOR REVIEW.
7. ANY PAD SHAPE BUILT (SQUARE OR HEXAGON) THAT WOULD ENCOMPASS THIS ROUND PAD DESIGN AND BUILT USING THE SAME THICKNESS, REINFORCEMENT CRITERIA (ADJUSTED FOR SHAPE AND SIZE), AND DESIGN SPECIFICATIONS WOULD BE CONSIDERED ACCEPTABLE UNDER THESE CALCULATIONS AND CRITERIA.

PART No.	TANK SZ.	TANK Ø	SG	Hc	Ht	Fd	Ft	REBAR SZ.	SPACING O.C.	CONCRETE PSI
7140--	6500	10.00	1.4	11.59	12.64	14.00	1.00	#4	16"	4000
5350--	12500	11.83	1.4	15.12	16.45	17.33	1.50	#4	12"	4000

Hc = HEIGHT OF TANK CONTENTS
Ht = HEIGHT OF TANK TOP
Fd = FOOTING (PAD) DIAMETER
Ft = TOTAL FOOTING (PAD) THICKNESS

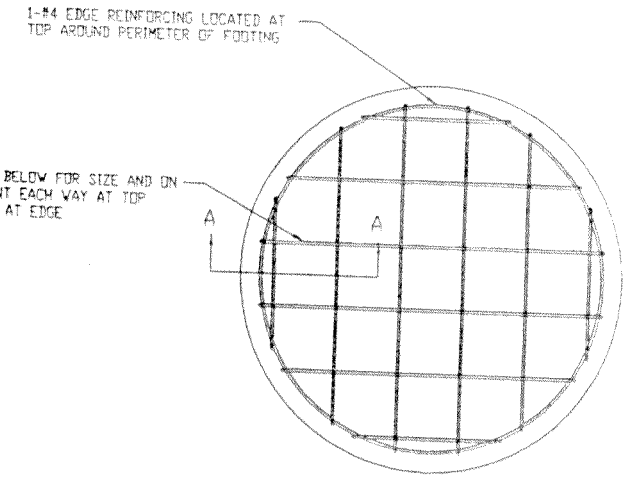

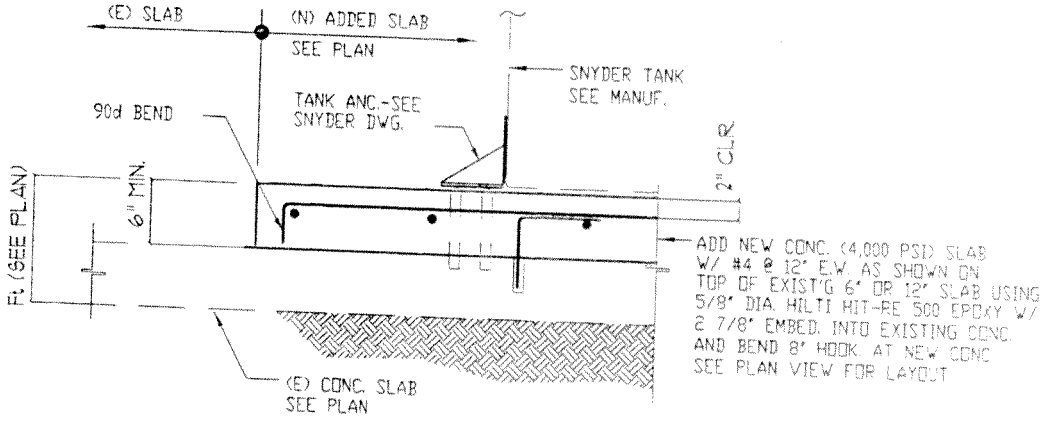

SECTION VIEW A-A

2/12/13

REGISTERED PROFESSIONAL ENGINEER - STATE OF NEBRASKA
JAIK CHOI
CIVIL
No. 7781
Exp. 12/31/13

SNYDER INDUSTRIES INC.
LINCOLN, NE 68504 PHONE:(402) 467-5221 FAX:(402) 467-3247

SCALE: NTS	APPROVED BY:	DRAWN BY: J.D.
DATE: 08/31/04		REVISED

SEISMIC CABLE RESTRAINT SYSTEM 4000 PSI FOUNDATION DESIGN FOR 6,500 & 12,500 GALLON TANKS

TOLERANCES UNLESS OTHERWISE SPECIFIED:
FRACTIONAL: ±1/32"; ANGULAR: ±1°
DECIMAL: .X = ±0.100"; .XX = ±0.060"; .XXX = ±0.003"

DRAWING NUMBER
B-2509

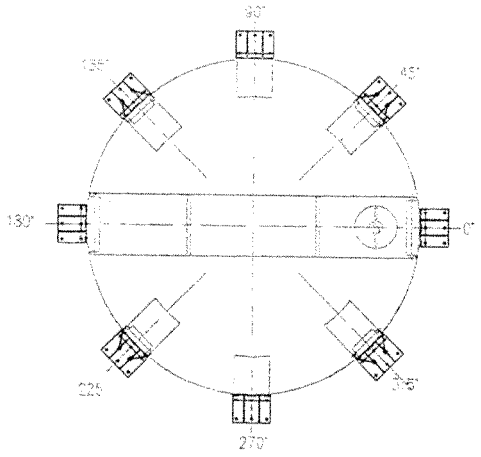

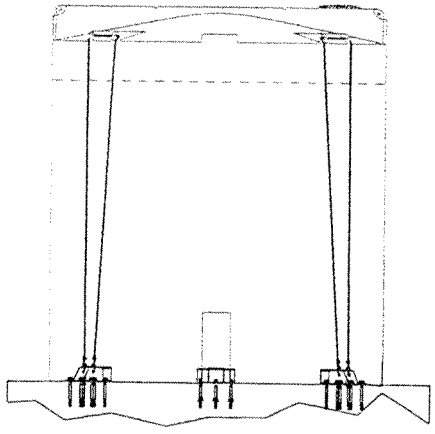

TABLE 1				
CLIP SIZE (INCHES)	ROPE SIZE (INCHES)	MINIMUM # CLIPS REQ.	AMOUNT OF ROPE TURN-BACK (INCHES)	*TORQUE IN Ft. Lbs
1/4	1/4	2	4-3/4	15
3/8	3/8	2	6-1/2	45
1/2	1/2	3	11-1/2	65
5/8	5/8	3	12	95

* THE TIGHTENING TORQUE VALUES SHOWN ARE BASED UPON THE THREADS BEING CLEAN, DRY, AND FREE OF LUBRICATION.)

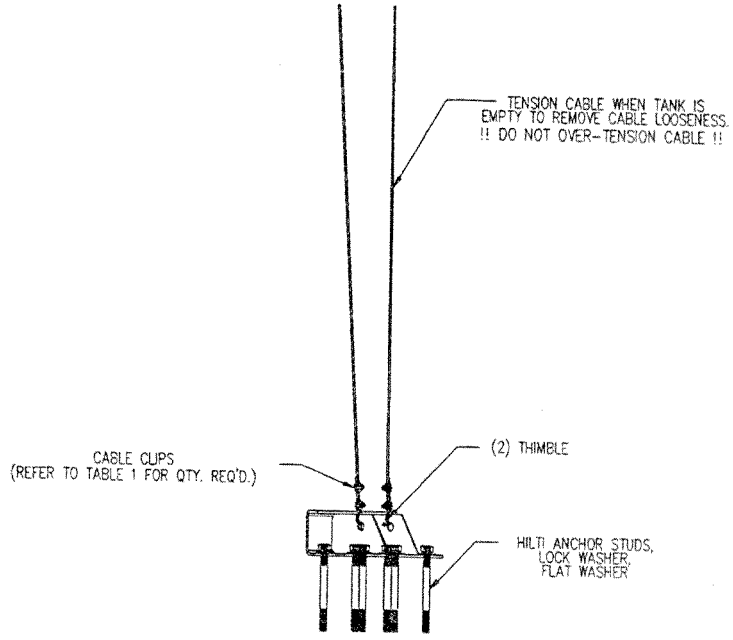

1.4 SPECIFIC GRAVITY								
TANK GAL.	TANK DIA.	ANCHOR	QTY.	ANCHOR BOLT	QTY.	EMBEDMENT	CABLE	FOUNDATION
6500	120"	B-2469	4	1" HILTI HAS STD.	24	9"	1/4"	B-2509
12500	142"	B-2467	8	1" HILTI SUPER HAS (ASTM 193A)	32	9"	1/4"	B-2509

REVISIONS			
#	DESCRIPTION	DATE	BY
A	PICTORIALLY UPDATE ANCHOR	01/07/13	J.O.

CODES:

CODES:
IBC2006
CBC2007
ASCE 7.05
AISC 13th EDITION
ACI 318-02
SEISMIC DESIGN:
IBC SEISMIC DESIGN CATAGORY "D" (GOVERNING CODES)
Fp=(Vi Wi+Vc Wc)/(We+Wc*SG)= .434W
(Ss=1.34, S1 =.53, R=3.0, I=1.5)
WIND DESIGN:
IBC - 110 MPH
Qz=.00256KzKztKdV^2*I=31.27PSF
(Kz=.85, Kzt=1.0, Kd=.95,I=1.25)

GENERAL:
1. ALL CONSTRUCTION SHALL MEET LOCAL BUILDING CODE REQUIREMENTS AND BE APPROVED BY THE BUILDING OFFICIAL.
2. THESE GUIDELINES HAVE BEEN PROVIDED TO SPECIFY THE RESTRAINT RECOMMENDATIONS FOR SNYDER INDUSTRY BULK STORAGE TANKS.

CONCRETE:
1. CONCRETE SHALL HAVE A MINIMUM DESIGN AS PER DRAWING REFERENCED IN SPECIFICATION CHART BELOW..
2. CONCRETE PAD DESIGN SHOULD BE REVIEWED AND APPROVED BY THE BUILDING OFFICIAL BASED ON SPECIFIC APPLICATION AS OTHER DESIGN PARAMETERS ARE POSSIBLE DEPENDING UPON SITE CONDITIONS.

STRUCTURAL STEEL:
1. ALL STRUCTURAL STEEL COMPONENTS SHALL BE NEW AND OF BASIC OPEN HEARTH PROCESS STEEL CONFORMING TO ALL APPLICABLE REQUIREMENTS OF ASTM A36 (STRUCTURAL STEEL FOR BRIDGES AND BUILDINGS - Fy = 36,000 PSI.).
2. ALL ARC WELDING ELECTRODES SHALL CONFORM TO ASTM A233 FOR STEEL ARC WELDING ELECTRODES. ELECTRODES SHALL BE AS RECOMENDED BY THE MANUFACTURES FOR THE POSITIONS AND OTHER CONDITIONS OF ACTUAL USE. WELDING SHALL CONFORM TO REQUIREMENTS OF AMERICAN WELDING SOCIETY AWS D1.1.
3. ALL SHARP EDGES AND CORNERS SHALL BE REMOVED ON ALL STRUCTURAL STEEL COMPONENTS.
4. CABLES TO BE 7X19 STRANDED CORE CONSTUCTION SIZED PER CHART. MATERIAL TO BE SPECIFIED BY CUSTOMER ORDER (MINIMUM BREAKING STRENGTH EQUAL TO OR GREATER THAN 304 SS RATING).
5. ANCHOR BOLTS TO BE HILTI ADHESIVE ANCHORS, MODEL HVA WITH SIZE, MATERIAL, AND EMBEDMENT AS SPECIFIED PER SPECIFICATION CHART BELOW.

ALL OTHER FASTENER MATERIALS MUST CORRESPOND TO THE TYPE OF ANCHOR SELECTED.

2/12/13

REGISTERED PROFESSIONAL ENGINEER - STATE OF NEBRASKA
JAIK CHOI
CIVIL
EXP. 12/31/14

SNYDER INDUSTRIES INC.
LINCOLN, NE 68504 PHONE: (402)467-5221 FAX: (402)465-1210

SCALE: NTS	APPROVED BY:	DRAWN BY: J.O.
DATE: 01/07/13		REVISION: A

S.I.I. TANK SEISMIC RESTRAINT SYSTEM RECOMENDATIONS FOR S.I.I. 6,500 & 12,500 GALLON VERTICAL STORAGE TANKS

TOLERANCES UNLESS SPECIFIED OTHERWISE
ANGULAR: ± 1°
DECIMAL: .XXX = ± 1/32"

DRAWING NUMBER
B-2497

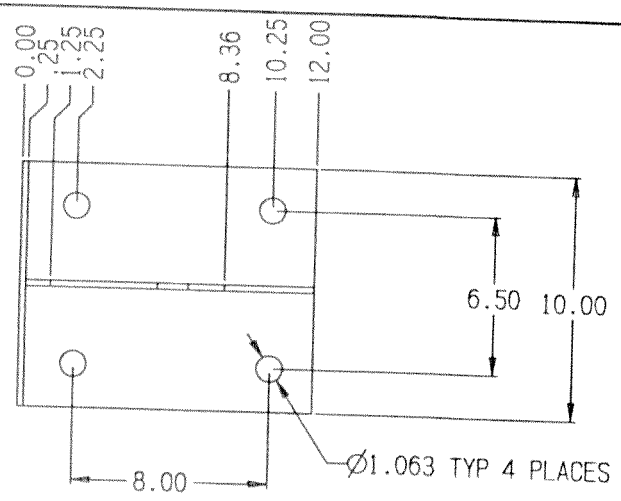

NOTES:
1. MATERIAL ASTM A-36 OR EQUAL. PLATE 1/4" THICK.
2. HOT DIP GALVANIZE THE PART PER ASTM A-123-89. ALTERNATE FINISH TO BE BLACK ENAMEL PAINT FINISH PER SII PAINTING STANDARDS. DATED 7/13/98. HOT DIP GALVANIZED IS THE PREFERRED FINISH.
3. PART SHOWN IS MADE WITH A BENT PLATE. BEND MUST BE PERPENDICULAR TO THE PLATE GRAIN.
4. WELDED FABRICATION CAN BE SUBSTITUTED FOR THE BEND, BUT WELD MUST BE FULL PENETRATION WELD FROM BOTH SIDES AND GROUND SMOOTH ON THE BOTTOM OF THE PLATE.
5. DEBUR ALL EDGES. HEAVILY DEBUR HOLE ON VERTICAL PLATE (A SMALL RADIUS IS PREFERRED).

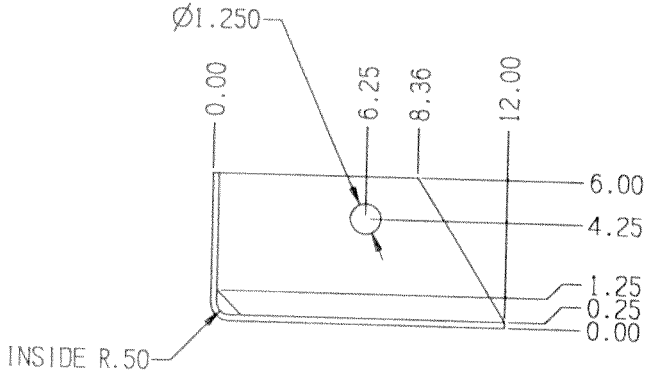

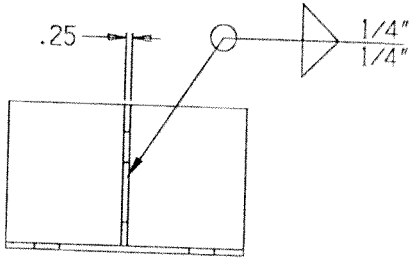

2/12/13

SNYDER INDUSTRIES INC. LINCOLN, NE 68504 PHONE:(402) 467-5221 FAX:(402) 467-3247		
SCALE: 1:3	APPROVED BY:	DRAWN BY: D.A.D.
DATE: 5/18/04		REVISED
SEISMIC ANCHOR PLATE - 4 BOLT VERSION		
TOLERANCES UNLESS OTHERWISE SPECIFIED: FRACTIONAL: ±1/32"; ANGULAR: ±1° DECIMAL: .X = ±0.100"; .XX = ±0.030"; .XXX = ±0.010"		DRAWING NUMBER B-2467

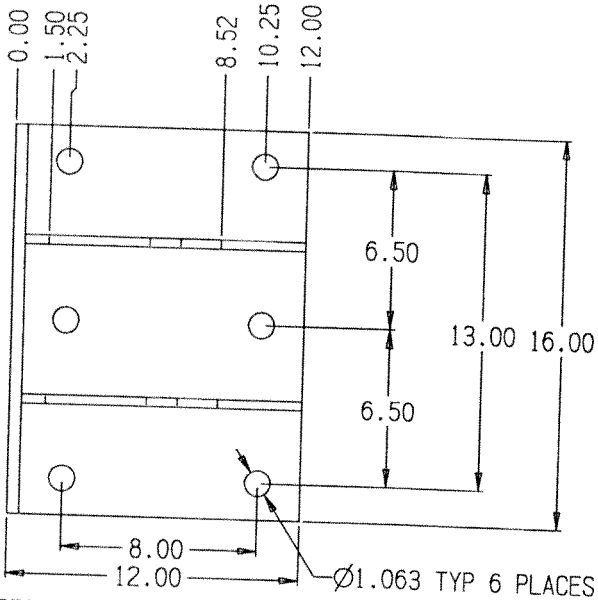

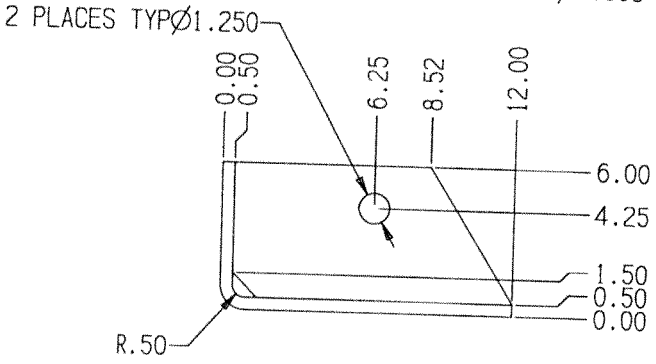

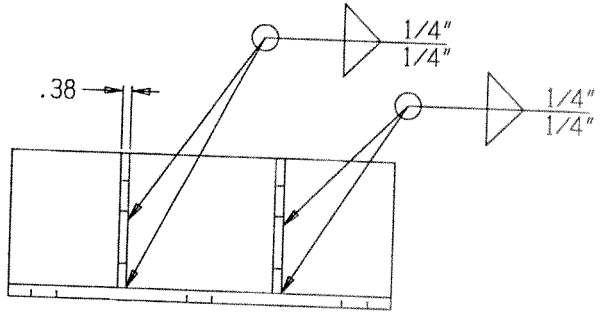

NOTES:
1. MATERIAL ASTM A-36 OR EQUAL. PLATE 3/8 AND 1/2" THICK.
2. HOT DIP GALVANIZE THE PART PER ASTM A-123-89. ALTERNATE FINISH TO BE BLACK ENAMEL PAINT FINISH PER SII PAINTING STANDARDS. DATED 7/13/98. HOT DIP GALVANIZED IS THE PREFERRED FINISH.
3. PART SHOWN IS MADE WITH A BENT PLATE. BEND MUST BE PERPENDICULAR TO THE PLATE GRAIN.
4. WELDED FABRICATION CAN BE SUBSTITUTED FOR THE BEND, BUT WELD MUST BE FULL PENETRATION WELD FROM BOTH SIDES AND GROUND SMOOTH ON THE BOTTOM OF THE PLATE.
5. DEBUR ALL EDGES. HEAVILY DEBUR HOLE ON VERTICAL PLATE (A SMALL RADIUS IS PREFERRED).

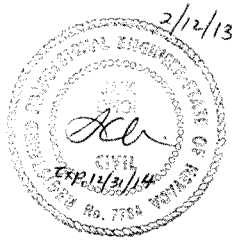

SNYDER INDUSTRIES INC.		
LINCOLN, NE 68504 PHONE:(402) 467-5221 FAX:(402) 467-3247		
SCALE: 1:3	APPROVED BY:	DRAWN BY: D.A.O.
DATE: 5/18/04		REVISED
SEISMIC ANCHOR PLATE - 6 BOLT HEAVY VERSION		
TOLERANCES UNLESS OTHERWISE SPECIFIED: FRACTIONAL: ±1/32"; ANGULAR: ±1° DECIMAL: .X = ±0.100"; .XX = ±0.030"; .XXX = ±0.010"		DRAWING NUMBER B-2469

PSC Environmental Services, LLC
Fernley, Lyon County, Nevada

Structural Calculations
For
Poly Tank Foundations

Design Code: 2009 IBC

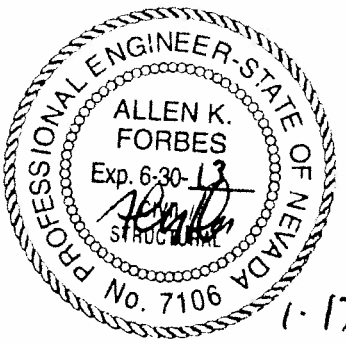

1-17-13

Prepared for:

Mr. Jim Dailey
Equipment Pro Incorporated
721 Parkwood Drive
Ste. Genevieve, MO 63670

January 11, 2013

FEG Project Number: 121039

Title : PSC Fernley, Nevada
Dsgnr: JJS
Description : Tank Footing Design
Scope :

Job # 121039
Date: 12:07PM, 11 JAN 13

Rev. 5.8.0.02
User: KW-0603475, Ver 5.8.0, 1-Dec-2003
(c)1983-2003 ENERCALC Engineering Software

General Footing Analysis & Design

Description 6,500 Gal Tank

General Information

Code Ref: ACI 318-02, 1997 UBC, 2003 IBC, 2003 NFPA 5000

Allowable Soil Bearing	1,500.0 psf	**Dimensions...**	
Short Term Increase	1.000	Width along X-X Axis	14.000 ft
Seismic Zone	4	Length along Y-Y Axis	14.000 ft
Live & Short Term Combined		Footing Thickness	6.00 in
f'c	4,000.0 psi	Col Dim. Along X-X Axis	84.00 in
Fy	60,000.0 psi	Col Dim. Along Y-Y Axis	84.00 in
Concrete Weight	145.00 pcf	Base Pedestal Height	0.000 in
Overburden Weight	0.00 psf	Min Steel %	0.0014
		Rebar Center To Edge Distance	2.00 in

Loads

Applied Vertical Load...

Dead Load	77.200 k	...ecc along X-X Axis	0.000 in
Live Load	k	...ecc along Y-Y Axis	0.000 in
Short Term Load	k		

Applied Moments...	Creates Rotation about Y-Y Axis (pressures @ left & right)	Creates Rotation about X-X Axis (pressures @ top & bot)
Dead Load	k-ft	k-ft
Live Load	k-ft	k-ft
Short Term	228.100 k-ft	228.100 k-ft

Applied Shears...	Creates Rotation about Y-Y Axis (pressures @ left & right)	Creates Rotation about X-X Axis (pressures @ top & bot)
Dead Load	k	k
Live Load	k	k
Short Term	k	k

Summary

Caution: X(short)ecc>Widt

14.00ft x 14.00ft Footing, 6.0in Thick, w/ Column Support 84.00 x 84.00in x 0.0in high

	DL+LL	DL+LL+ST		Actual	Allowable
Max Soil Pressure	466.4	966.3 psf	Max Mu	7.019 k-ft per ft	
Allowable	1,500.0	1,500.0 psf	Required Steel Area		0.423 in2 per ft
"X" Ecc. of Resultant	0.000 in	29.944 in			
"Y" Ecc. of Resultant	0.000 in	29.944 in	Shear Stresses....	Vu	Vn * Phi
X-X Min. Stability Ratio	2.805	1.500 :1	1-Way	76.568	107.517 psi
Y-Y Min. Stability Ratio	2.805		2-Way	54.868	131.953 psi

Footing Design

Shear Forces	ACI C-1	ACI C-2	ACI C-3	Vn * Phi
Two-Way Shear	46.92 psi	54.87 psi	35.27 psi	131.95 psi
One-Way Shears...				
Vu @ Left	33.13 psi	76.57 psi	49.22 psi	107.52 psi
Vu @ Right	33.13 psi	1.05 psi	0.67 psi	107.52 psi
Vu @ Top	33.13 psi	76.57 psi	49.22 psi	107.52 psi
Vu @ Bottom	33.13 psi	1.05 psi	0.67 psi	107.52 psi

Moments	ACI C-1	ACI C-2	ACI C-3	Ru / Phi	As Req'd
Mu @ Left	2.89 k-ft	-0.22 k-ft	-0.14 k-ft	200.5 psi	0.17 in2 per ft
Mu @ Right	2.89 k-ft	7.02 k-ft	4.51 k-ft	487.4 psi	0.42 in2 per ft
Mu @ Top	2.89 k-ft	7.02 k-ft	4.51 k-ft	487.4 psi	0.42 in2 per ft
Mu @ Bottom	2.89 k-ft	-0.22 k-ft	-0.14 k-ft	200.5 psi	0.17 in2 per ft

Title : PSC Fernley, Nevada
Dsgnr: JJS
Description : Tank Footing Design
Job # 121039
Date: 12:07PM, 11 JAN 13

Scope :

Rev 580002
User: KW-0603478, Ver 5.8.0, 1-Dec-2003
(c)1983-2003 ENERCALC Engineering Software

General Footing Analysis & Design

Description 6,500 Gal Tank

Soil Pressure Summary

Service Load Soil Pressures	Left	Right	Top	Bottom
DL + LL	466.38	466.38	466.38	466.38 psf
DL + LL + ST	0.00	966.30	966.30	0.00 psf
Factored Load Soil Pressures				
ACI Eq. C-1	559.65	559.65	559.65	559.65 psf
ACI Eq. C-2	0.00	1,352.82	1,352.82	0.00 psf
ACI Eq. C-3	0.00	869.67	869.67	0.00 psf

ACI Factors (per ACI 318-02, applied internally to entered loads)

ACI C-1 & C-2 DL	1.200	ACI C-2 Group Factor	0.750	Add'l "1.4" Factor for Seismic	1.400
ACI C-1 & C-2 LL	1.600	ACI C-3 Dead Load Factor	0.900	Add'l "0.9" Factor for Seismic	0.900
ACI C-1 & C-2 ST	1.000	ACI C-3 Short Term Factor	1.000		
....seismic = ST * :	1.100	Used in ACI C-2 & C-3			

Summary Sketch | Printing |

Print Sketch

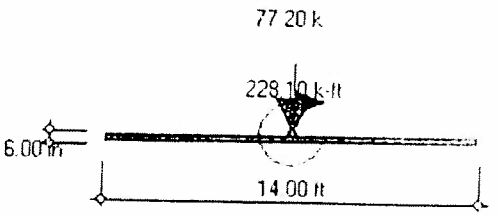

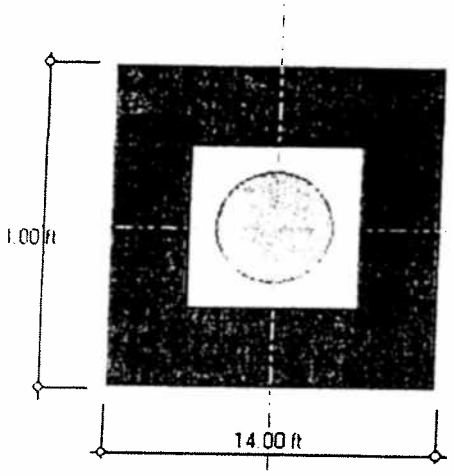

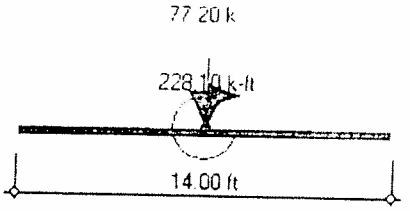

6,500 Gallon Tank

9/12

Title : PSC Fernley, Nevada
Dsgnr: JJS
Description : Tank Footing Design
Scope :

Job # 121039
Date: 12:07PM, 11 JAN 13

General Footing Analysis & Design

Description 12,500 Gal Tank

General Information

Code Ref: ACI 318-02, 1997 UBC, 2003 IBC, 2003 NFPA 5000

Allowable Soil Bearing	1,500.0 psf	**Dimensions...**	
Short Term Increase	1.000	Width along X-X Axis	17.330 ft
Seismic Zone	4	Length along Y-Y Axis	17.330 ft
Live & Short Term Combined		Footing Thickness	6.00 in
f'c	4,000.0 psi	Col Dim. Along X-X Axis	102.00 in
Fy	60,000.0 psi	Col Dim. Along Y-Y Axis	102.00 in
Concrete Weight	145.00 pcf	Base Pedestal Height	0.000 in
Overburden Weight	0.00 psf	Min Steel %	0.0014
		Rebar Center To Edge Distance	2.00 in

Loads

Applied Vertical Load...

Dead Load	149.000 k	...ecc along X-X Axis	0.000 in
Live Load	k	...ecc along Y-Y Axis	0.000 in
Short Term Load	k		

Applied Moments...	Creates Rotation about Y-Y Axis (pressures @ left & right)	Creates Rotation about X-X Axis (pressures @ top & bot)
Dead Load	k-ft	k-ft
Live Load	k-ft	k-ft
Short Term	586.100 k-ft	586.100 k-ft

Applied Shears...	Creates Rotation about Y-Y Axis (pressures @ left & right)	Creates Rotation about X-X Axis (pressures @ top & bot)
Dead Load	k	k
Live Load	k	k
Short Term	k	k

Summary

Caution: X(short)ecc>Widt

17.33ft x 17.33ft Footing, 6.0in Thick, w/ Column Support 102.00 x 102.00in x 0.0in high

	DL+LL	DL+LL+ST		Actual	Allowable
Max Soil Pressure	568.6	1,255.4 psf	Max Mu	12.608 k-ft per ft	
Allowable	1,500.0	1,500.0 psf	Required Steel Area		0.826 in2 per ft
"X' Ecc. of Resultant	0.000 in	41.184 in			
"Y' Ecc. of Resultant	0.000 in	41.184 in	Shear Stresses....	Vu	Vn * Phi
X-X Min. Stability Ratio	2.525	1.500 :1	1-Way	106.412	107.517 psi
Y-Y Min. Stability Ratio	2.525		2-Way	78.464	127.804 psi

Footing Design

Shear Forces	ACI C-1	ACI C-2	ACI C-3	Vn * Phi
Two-Way Shear	77.81 psi	78.46 psi	58.85 psi	127.80 psi
One-Way Shears...				
Vu @ Left	51.26 psi	106.41 psi	79.81 psi	107.52 psi
Vu @ Right	51.26 psi	-1.87 psi	-1.40 psi	107.52 psi
Vu @ Top	51.26 psi	106.41 psi	79.81 psi	107.52 psi
Vu @ Bottom	51.26 psi	-1.87 psi	-1.40 psi	107.52 psi

Moments	ACI C-1	ACI C-2	ACI C-3	Ru / Phi	As Req'd
Mu @ Left	5.80 k-ft	-0.56 k-ft	-0.42 k-ft	402.6 psi	0.34 in2 per ft
Mu @ Right	5.80 k-ft	12.61 k-ft	9.46 k-ft	875.5 psi	0.83 in2 per ft
Mu @ Top	5.80 k-ft	12.61 k-ft	9.46 k-ft	875.5 psi	0.83 in2 per ft
Mu @ Bottom	5.80 k-ft	-0.56 k-ft	-0.42 k-ft	402.6 psi	0.34 in2 per ft

Title : PSC Fernley, Nevada
Dsgnr: JJS
Description : Tank Footing Design
Job # 121039
Date: 12:07PM, 11 JAN 13

Scope :

Rev: 580002
User: KW-0603478, Ver 5.8.0, 1-Dec-2003
(c)1983-2003 ENERCALC Engineering Software

General Footing Analysis & Design

Description 12,500 Gal Tank

Soil Pressure Summary

Service Load Soil Pressures	Left	Right	Top	Bottom
DL + LL	568.62	568.62	568.62	568.62 psf
DL + LL + ST	0.00	1,255.40	1,255.40	0.00 psf
Factored Load Soil Pressures				
ACI Eq. C-1	682.35	682.35	682.35	682.35 psf
ACI Eq. C-2	0.00	1,506.48	1,506.48	0.00 psf
ACI Eq. C-3	0.00	1,129.86	1,129.86	0.00 psf

ACI Factors (per ACI 318-02, applied internally to entered loads)

ACI C-1 & C-2 DL	1.200	ACI C-2 Group Factor	0.750	Add'l "1.4" Factor for Seismic	1.200
ACI C-1 & C-2 LL	1.600	ACI C-3 Dead Load Factor	0.900	Add'l "0.9" Factor for Seismic	0.900
ACI C-1 & C-2 ST	1.000	ACI C-3 Short Term Factor	1.000		
...seismic = ST * :	1.100 Used in ACI C-2 & C-3				

Summary Sketch | Printing |

Print Sketch

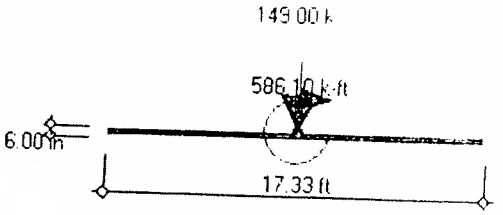

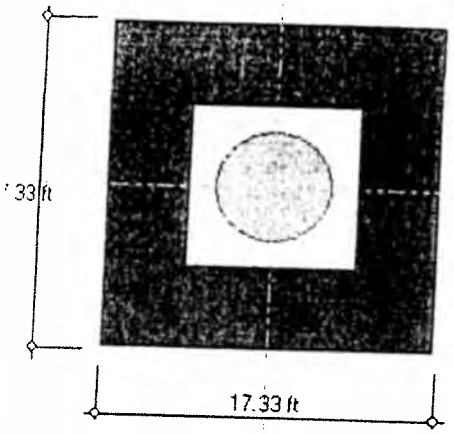

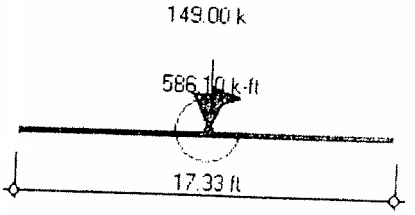

12,500 Gallon Tank

Jaik Choi Associates
Structural Engineering
(949)706-7789, Fax:(424)239-2666
email; jcse@msn.com

Snyder Industries

Lincoln, NE

Sheet No
Job No 12-932A
Date: 12/20/12
By; J. Choi

C) FOUNDATION DESIGN

Sil Vertical Ground Supported Tank (flat bottom)

Desgin loads = Vs = 0.434 W

Hc; Height of tank content
Ht; Height of tank top
We; Empty Weight of tank
Wc; Content Weight in tank
Wt; Total Weight of tank
Wf; Footing Weight
SG; Specific Gravity
Fd; Footing Diameter
Fe; Footing Edge Distance
Ft; Footing Thickness
Mf; Moment in the footing
Mot; Overturning Moment
Mr; Resisting Moment
F.S.; Factor of Safety for Overturning
SL; Sliding resistance
Fa; Soil bearing value (Direct)
Fb; Soil bearing value (Overturing)
Fs; Soil bearing value (Total)
b; Soil reaction resultant location
Sf; Section Modulus of footing
As; Area of reinforcing steel required

Design Parameter

Allow. Bearing "Fb"=	1500 psf x 1.33 =	1995 psf
Passive Pressure "Pp"=	250 psf x 1.33 =	332.5 psf
Friction Coeff. = u =	0.3	

1) Overturning

Mot = Vs*Hc/2
Total Dl.(TD) = W + Wt. Ftg
Mresist (Mr) = TD*.5*Fw
Factor of Safety "F.S."=Mr/Mot = > 1.5

2) Sliding of Foundation

Load = Fp = Vs
Resist = u*Total Dl.+ Passive Pressure
SL > Vs

3) Soil Bearing

Result @ (Mr-Mot)/TD="b"
Fa = (Wt + Wf) / (.785*Fd^2)
Fb = (Wt + Wf)*(.5*Fd-b)/Sf
Fs = (Fa + Fb) psf < 1995 O.K.

SERVICE DEAD LOAD USED IN ENERCALC

Design for Specific gravity (SG) = 1.4

INPUT PARAMETERS

FOUNDATION SIZES

PART NUMBER	TANK SIZE (GAL.)	TANK DIA. (FT.)	Hc (FT.)	Ht (FT.)	We (LBS.)	Wc (LBS.)	Wt (LBS.)	Fe (FT.)	Fd (FT.)	Ft (FT.)	b (FT.)	Wf (LBS.)
7140--	6500	10.00	11.59	12.64	1450	75839	77289	2.00	14.00	1.00	4.73	23079
5350--	12500	11.83	15.12	16.45	3100	145845	148945	2.75	17.33	1.50	5.76	53046

ULTIMATE SEISMIC OVERTURNING LOAD USED IN ENERCALC

RESULTS

SOIL BEARING & FOOTING REINFORCING

PART NUMBER	Vs (LBS.)	SL (LBS.) > Vs	Mot (ft-k)	Mr (ft-k)	F.S. > 1.5	Fa psf	Fb psf	Fs psf	Mf ft.-k	As in2	Reinf Size	Reinf in. o.c.
7140--	33569	31155	228.1	703	3.08	652	847	1499	2.84	0.14	# 4 @	17
5350--	64691	64541	586.1	1750	2.99	857	1147	2004	7.12	0.20	# 4 @	12

8/12

Title : PSC Fernley, Nevada
Dsgnr: JJS
Description : Tank Footing Design
Scope :

Job # 121039
Date: 12:34PM, 11 JAN 13

Rev. 580002
User: KW-0603478, Ver 5.8.0, 1-Dec-2003
(c)1983-2003 ENERCALC Engineering Software

General Footing Analysis & Design

Description 7,400 Gal Tank on Existing 12" Concrete Pad

General Information

Code Ref: ACI 318-02, 1997 UBC, 2003 IBC, 2003 NFPA 5000

Allowable Soil Bearing	1,500.0 psf	Dimensions...	
Short Term Increase	1.000	Width along X-X Axis	14.500 ft
Seismic Zone	4	Length along Y-Y Axis	14.500 ft
Live & Short Term Combined		Footing Thickness	12.00 in
f'c	4,000.0 psi	Col Dim. Along X-X Axis	102.00 in
Fy	60,000.0 psi	Col Dim. Along Y-Y Axis	102.00 in
Concrete Weight	145.00 pcf	Base Pedestal Height	0.000 in
Overburden Weight	0.00 psf	Min Steel %	0.0014
		Rebar Center To Edge Distance	5.00 in

Loads

Applied Vertical Load...

Dead Load	87.500 k	...ecc along X-X Axis	0.000 in
Live Load	k	...ecc along Y-Y Axis	0.000 in
Short Term Load	k		

Applied Moments...	Creates Rotation about Y-Y Axis (pressures @ left & right)	Creates Rotation about X-X Axis (pressures @ top & bot)
Dead Load	k-ft	k-ft
Live Load	k-ft	k-ft
Short Term	382.400 k-ft	382.400 k-ft

Applied Shears...	Creates Rotation about Y-Y Axis (pressures @ left & right)	Creates Rotation about X-X Axis (pressures @ top & bot)
Dead Load	k	k
Live Load	k	k
Short Term	k	k

Summary

Caution: X(short)ecc>Widt

14.50ft x 14.50ft Footing, 12.0in Thick, w/ Column Support 102.00 x 102.00in x 0.0in high

	DL+LL	DL+LL+ST
Max Soil Pressure	561.2	1,353.1 psf
Allowable	1,500.0	1,500.0 psf
'X' Ecc. of Resultant	0.000 in	38.893 in
'Y' Ecc. of Resultant	0.000 in	38.893 in
X-X Min. Stability Ratio	2.237	1.500 :1
Y-Y Min. Stability Ratio	2.237	

	Actual	Allowable
Max Mu	5.998 k-ft per ft	
Required Steel Area		0.259 in2 per ft

Shear Stresses....	Vu	Vn * Phi
1-Way	37.588	107.517 psi
2-Way	21.720	142.041 psi

Footing Design

Shear Forces	ACI C-1	ACI C-2	ACI C-3	Vn * Phi
Two-Way Shear	20.71 psi	21.72 psi	16.29 psi	142.04 psi
One-Way Shears...				
Vu @ Left	14.37 psi	37.59 psi	28.19 psi	107.52 psi
Vu @ Right	14.37 psi	-5.01 psi	-3.75 psi	107.52 psi
Vu @ Top	14.37 psi	37.59 psi	28.19 psi	107.52 psi
Vu @ Bottom	14.37 psi	-5.01 psi	-3.75 psi	107.52 psi

Moments	ACI C-1	ACI C-2	ACI C-3	Ru / Phi	As Req'd
Mu @ Left	2.24 k-ft	-0.78 k-ft	-0.59 k-ft	50.9 psi	0.26 in2 per ft
Mu @ Right	2.24 k-ft	6.00 k-ft	4.50 k-ft	136.0 psi	0.26 in2 per ft
Mu @ Top	2.24 k-ft	6.00 k-ft	4.50 k-ft	136.0 psi	0.26 in2 per ft
Mu @ Bottom	2.24 k-ft	-0.78 k-ft	-0.59 k-ft	50.9 psi	0.26 in2 per ft

Rev: 580002
User: KW-0603478, Ver 5.8.0, 1-Dec-2003
(c)1983-2003 ENERCALC Engineering Software

General Footing Analysis & Design

Description 7,400 Gal Tank on Existing 12" Concrete Pad

Soil Pressure Summary

Service Load Soil Pressures	Left	Right	Top	Bottom
DL + LL	561.17	561.17	561.17	561.17 psf
DL + LL + ST	0.00	1,353.14	1,353.14	0.00 psf
Factored Load Soil Pressures				
ACI Eq. C-1	673.41	673.41	673.41	673.41 psf
ACI Eq. C-2	0.00	1,623.77	1,623.77	0.00 psf
ACI Eq. C-3	0.00	1,217.82	1,217.82	0.00 psf

ACI Factors (per ACI 318-02, applied internally to entered loads)

ACI C-1 & C-2 DL	1.200	ACI C-2 Group Factor	0.750	Add'l "1.4" Factor for Seismic	1.200
ACI C-1 & C-2 LL	1.600	ACI C-3 Dead Load Factor	0.900	Add'l "0.9" Factor for Seismic	0.900
ACI C-1 & C-2 ST	1.000	ACI C-3 Short Term Factor	1.000		
....seismic = ST * :	1.100 Used in ACI C-2 & C-3				

Summary Sketch | Printing |

Print Sketch

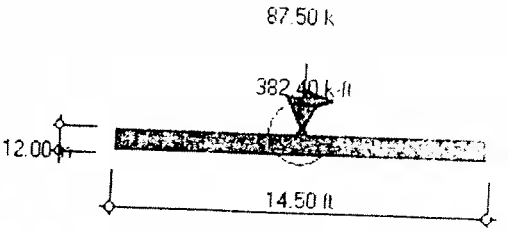

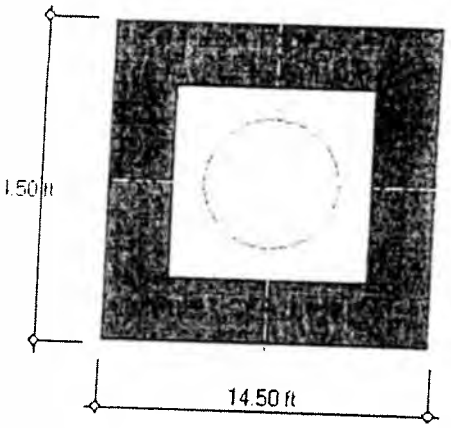

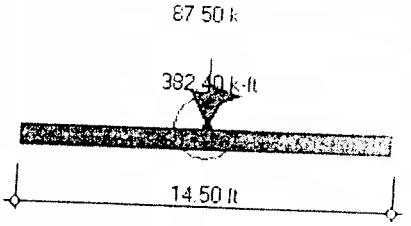

7,400 Gallon Tank

Jaik Choi,Associates
Structural Engineering
(949)706-7789, Fax:(424)239-2666
email, jcse@msn.com

Snyder

Lincoln, NE

Sheet No. [illegible]
Job No 12-932A
Date 12/20/12
By J. Choi

Structural Calculations for the footing supporting tank

C) FOUNDATION DESIGN

Vertical Ground Supported Tank (Cone bottom)

Desgin loads = Vs = 0.434 W

Hc; Height of tank content
Ht; Height of tank top
We; Empty Weight of tank
Wc; Content Weight in tank
Wt; Total Weight of tank
Wf; Footing Weight
SG; Specific Gravity
Fd; Footing Diameter
Fe; Footing Edge Distance
Ft; Footing Thickness
Mf; Moment in the footing
Mot; Overturning Moment
Mr; Resisting Moment
F.S.; Factor of Safety for Overturning
SL; Sliding resistance
Fa; Soil bearing value (Direct)
Fb; Soil bearing value (Overturing)
Fs; Soil bearing value (Total)
b; Soil reaction resultant location
Sf; Section Modulus of footing
As; Area of reinforcing steel required

Design Parameter

Allow. Bearing "Fb"=	1500 psf x 1.33 =	1995 psf
Passive Pressure "Pp"=	250 psf x 1.33 =	332.5 psf
Friction Coeff = u =	0.4	

1) Overturning

Mot = Vs*Hc/2
Total Dl.(TD) = W + Wt. Ftg
Mresist (Mr) = TD*.5*Fw
Factor of Safety "F.S."=Mr/Mot = > 1.5

2) Sliding of Foundation

Load = Fp = Vs
Resist = u*Total Dl.+ Passive Pressure
SL > Vs

3) Soil Bearing

Result @ (Mr-Mot)/TD="b"
Fa = (Wt + Wf) / (785*Fd^2)
Fb = (Wt + Wf)*(5*Fd-b)/Sf
Fs = (Fa + Fb) psf < 1995 O.K.

Design for Specific gravity (SG) = 1.4

Footing width = 14.50 ft
Saddle dist. = 8.30 ft

SERVICE DEAD LOAD USED IN ENERCALC

INPUT PARAMETERS

FOUNDATION SIZES

PART NUMBER	TANK SIZE (GAL.)	TANK DIA (FT.)	Hcg (FT.)	Ht (FT.)	We (LBS.)	Wc (LBS.)	Wt (LBS.)	Fe (FT.)	Fd (FT.)	Ft (FT.)	b (FT.)	Wf (LBS.)
5320000N	7400	11.83	9.06	13.36	1200	86340	87540	1.33	14.49	1.00	3.84	24723

RESULTS

SOIL BEARING & FOOTING REINFORCING

PART NUMBER	Vs (LBS.)	SL (LBS.) > Vs	Mot (ft-k)	Mr (ft-k)	F.S. > 1.5	Fa psf	Fb psf	Fs psf	Mf ft-k	As in2	Reinf Size	in. o.c.
5320000N	38014	45987	382.4	813	2.13	681	1280	1962	3.59	0.19	# 4 @	13

ULTIMATE SEISMIC OVERTURNING LOAD USED IN ENERCALC

Frontenac Engineering Group
2725 Sutton Boulevard
Saint Louis, Missouri 63143
314-644-2200 Fax 314-644-0645

JOB 15637 [illegible]
SHEET NO 12 OF [illegible]
CALCULATED BY JJS DATE 1/14/2
CHECKED BY DATE
SCALE

Determine Size & Spacing of Reinforcing

1. 6,500 Gallon Tank

$A_{s\,req} = 0.42 in^2/ft$

Provide No. 6 Bars @ 12" o.c. Each Way

$A_{s\,provided} = 0.44 in^2/ft$ ok

2. 12,500 Gallon Tank

$A_{s\,req} = 0.83 in^2/ft$

Provide No. 6 Bars @ 6" o.c.

$A_{s\,provided} = 0.88 in^2/ft$ ok

3. 7,400 Gal. Tank

Tank rests on existing 12" Conc Pad & requires only minimum reinforcing. Assume existing pad contains sufficient reinforcing. ok

Frontenac Engineering Group
2725 Sutton Boulevard
Saint Louis, Missouri 63143
314-644-2200 Fax 314-644-0645

JOB 121039 PSC NEVADA
SHEET NO. 12A OF 12
CALCULATED BY JJS DATE 1/15/13
CHECKED BY _____ DATE _____
SCALE _____

CHECK CONC. SLAB FOR PUNCHING SHEAR

OVERTURNING MOMENT:

$M_{OT} = 382.4$ Kft

DEAD WT OF STRUCTURE:

$W_t = 87.5$ Kips

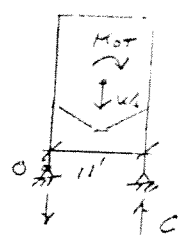

DISTANCE B/W SUPPORTS

$D = 11'$

ASSUME COMPRESSION FORCE IS DISTRIBUTED B/W (2) 4"x3½"x¼" ANGLE SUPPORTS.

$\Sigma M_O = 0$

$M_{OT} + W_t \times D/2 = C \times D$

$1.0(382.4) + 1.2(87.5)(5.5) = C \times 11$

$C = 87.3$ Kips (ULTIMATE DOWNWARD FORCE)

ULTIMATE FORCE PER PL

$V_u = \frac{1}{2} C = 43.7$ Kips

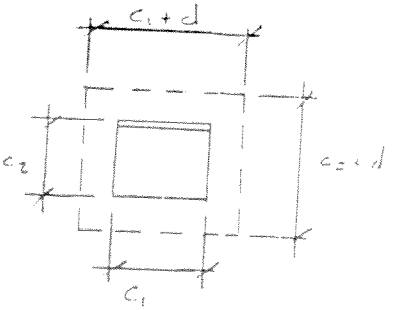

$c_1 = 4"$

$c_2 = 3.5"$

$d = 6"$

$c_1 + d$ 10"

$c_2 + d = 9.5"$

$b_o = 2(c_1 + d) + 2(c_2 + d)$

$b_o = 39$ in

$\phi V_c = \phi 4 \lambda \sqrt{f'_c}\, b_o d$

$\phi V_c = 0.75(4)\sqrt{4000}\,(27)(6)$

$\phi V_c = 41.4$ Kips $\approx V_u = 47.3$ Kips ok (SOME OF THE COMPRESSION FORCE WILL BE DISTRIBUTED TO ADJACENT BASE PL.)

∴ SLAB IS ADEQUATE TO RESIST PUNCHING SHEAR

Pastic Tank Chemical Resistance Chart for Polypropylene, Polyethylene Linear and Crosslink, gasket materials.

This Chemical Resistance Chart is provided as a general guide. Confirm this information with your chemical sales agent, get him to confirm container materials and get your MSDS report.

(No responsibility for performance is accepted, based on these guidelines) Remember chemical compounds have different characteristics as the compound's constituents percentages of concentrations CHANGE, temperature, pressure, particulate content, trace metals; all have an impact on corrosion.

Read The Above, it is very IMPORTANT that you understand these variables as you utilize this chart as a guide...

PE = Polyethylene... PP = Polypropylene... XLPE = Crosslink Polyethylene... A = Excellent... B = Good... C = Not suggested

Chemical resistance information. You can search this page by using your browser's *Find on this page* option.

Chemical Resistance Data

		TANK MATERIALS						FITTING MATERIAL						
		PE		PP		XLPE		PVC	CPVC	EPDM	NEOPRENE	VITON	316 SS	TITANIUM	HASTELLOY C
REAGENT	CONC.	70	140	70	140	70	140								
Acetone		C	C	C	C	C	C	C	C	C	C	C	C	C	C
Acetaldehyde*	100%	B	C	A	B	B	C	C	C	A	C	C	A	A	A
Acetic Acid*	10%	A	A	A	A	A	A	A	A	A	A	B	A	A	A
Acetic Acid*	60%	A	B	A	A	A	A	A	A	A	B	B	A	A	A
Acetic Anhydride		C	C	-	-	C	C	C	C	B	A	C	A	A	A
Air		A	A	A	A	A	A	A	A	A	A	A	A	A	A
Aluminum Chloride	all concentr.	A	A	A	A	A	A	A	A	A	A	A	C	B	A
Aluminum Fluoride	all concentr.	A	A	A	A	A	A	A	A	A	A	A	C	A	B
Aluminum Sulphate	all concentr.	A	A	A	A	A	A	A	A	A	A	A	B	A	B
Alums	all types	A	A	A	A	A	A	A	A	A	A	A	A	-	A
Ammonia	100% dry gas	A	A	A	A	A	A	B	A	A	A	A	A	C	A
Ammonium Carbonate		A	A	A	A	A	A	A	A	A	A		B	A	B
Ammonium Chloride	sat'd	A	A	A	A	A	A	A	A	A	A	A	C	B	A
Ammonium Fluoride	sat'd	A	A	A	A	A	A	A	A	B	A	A	C	A	A
Ammonium Hydroxide	10%	A	A	A	A	A	A	A	A	B	A	B	A	A	B
Ammonium Hydroxide	28%	A	A	A	A	A	A	A	A	A	A	B	A	A	B
Ammonium Nitrate	sat'd.	A	A	A	A	A	A	A	A	A	B	A	A	A	B
Ammonium Persulphate	sat'd.	A	A	A	A	A	A	A	A	A	A	A	B	A	B
Ammonium Sulphate	sat'd.	A	A	A	A	A	A	A	A	A	A	A	B	A	B
Ammonium Metaphoshate	sat'd.	A	A	A	A	A	A	A	A	A	A	A	B	A	B
Ammonium Sulfide	sat'd.	A	A	A	A	A	A	A	A	A	A	A	B	A	B
Amyl Acetate*#	100%	C	C	B	C	C	C	C	C	A	C	C	A	A	A
Amyl Alcohol*#	100%	A	A	A	B	A	A	A	A	A	A	B	A	B	A
Amyl Chloride*#	100%	C	C	C	C	C	C	C	C	C	C	B	A	C	A
Aniline*#	100%	C	C	A	A	A	C	C	C	B	C	C	B	C	B

Aqua Regia+		C	C	C	C	C	C	C	C	C	C	B	C	A	C						
Arsenic Acid	all concentr.	A	A	A	A	A	A	A	A	A	A	A	A	B	B						
Aromatic Hydrocarbons*#		C	C	-	-	C	C	C	C	C	C	A	C	-	-						
Ascorbic Acid	10%	A	A	A	A	A	A	A	A	A	A	A	-	-	-						
Barium Carbonate	sat'd.	A	A	A	A	A	A	A	A	A	A	A	B	A	B						
Barium Chloride	sat'd.	A	A	A	A	A	A	A	A	A	A	A	A	A	B						
Barium Hydroxide		A	A	A	A	A	A	A	A	A	A	A	B	B	A						
Barium Sulphate	sat'd.	A	A	A	A	A	A	B	B	A	A	A	B	B	-						
Barium Sulphate	sat'd.	A	A	A	A	A	A	A	A	A	A	A	B	A	A						
Beer		A	A	A	A	C	C	A	A	A	C	A	A	B	B						
Benzene*#		C	C	B	C	C	C	C	C	C	C	A	B	A	B						
Benzoic Acid	all concentr.	A	A	A	A	A	A	A	A	C	A	A	B	B	A						
Bismuth Carbonate	sat'd.	A	A	A	A	A	A	A	A	A	A	A	A	A	B						
Bleachlye	10%	A	A	A	A	A	A	A	A	A	A	A	A	B	B						
Borax	sat'd.	A	A	A	A	A	A	A	A	A	A	A	A	B	A						
Boric Acid	all concentr.	A	A	A	A	A	A	A	B	A	A	A	A	A	A						
Boron Trifluoride		A	A	-	-	A	A	A	A	A	A	A	-	B	-						
Brine		A	A	A	A	A	A	A	A	A	A	A	C	A	A						
Bromine+	liquid	C	C	C	C	C	C	C	C	C	C	A	C	A	A						
Bromine Water #	sat'd.	C	C	C	-	C	C	C	C	C	C	A	C	A	A						
Butanediol*	10%	A	A	A	A	A	A	-	-	-	-	-	-	-	-						
Butanediol*	60%	A	A	A	A	A	A	-	-	-	-	-	-	-	-						
Butanedial*	100%	A	A	A	A	A	A	-	-	-	-	-	-	-	-						
Butter*		A	A	A	A	C	C	-	A	A	B	A	A	-	-						
n-Butyl Acetate*#	100%	A	C	C	C	A	C	B	C	B	C	B	B	A	A						
n-Butyl Alcohol	100%	A	A	A	-	A	A	A	B	B	A	A	A	A	A						
Butyric Acid#	conc.	C	C	-	-	-	-	B	B	B	C	B	B	A	A						
Calcium Bisulphide		A	A	A	A	A	A	A	A	A	A	A	B	A	-						
Calcium Carbonate	sat'd.	A	A	A	A	A	A	A	A	A	A	A	B	B	B						
Calcium Chlorate	sat'd.	A	A	A	A	A	A	A	A	A	-	A	-	-	-						
Calcium Chloride	sat'd.	A	A	A	A	A	A	A	A	B	A	A	B	A	A						
Calcium Hydroxide	conc.	A	A	A	A	A	A	A	A	B	C	A	B	A	B						
Calcium Hyphochlorite	bleach sol'n.	A	A	A	B	B	B	B	B	A	C	A	C	-	B						
Calcium Nitrate	50%	A	A	A	A	A	A	A	A	A	B	A	A	A							
Calcium Oxide	sat'd.	A	A	-	-	A	A	A	A	A	A	A	A	A	A						
Calcium Sulphate		A	A	A	A	A	A	A	A	A	C	-	B	A	A						
Camphor Oil*#		C	C	C	C	C	C	-	-	-	-	A	A								
Carbon Dioxide	all concentr.	A	A	A	A	A	A	A	A	A	A	A	A	A	A						
Carbon Disulphide		C	C	B	C	C	C	C	C	C	C	A	B	B	B						
Carbon Monoxide		A	A	A	A	A	A	A	A	A	A	A	A	A	A						
Carbon Tectrachloride#		C	C	C	C	C	C	B	C	C	C	A	B	A	A						
Carbonic Acid		A	A	A	A	A	A	A	A	A	A	A	A	B	A						
Caster Oil#	conc.	A	A	A	A	A	A	A	A	A	A	A	A	A	A						
Chlorine+	100% dry gas	C	C	C	C	B	C	C	C	C	C	A	C	C	B						
Chlorineliquid+		C	C	C	C	C	C	A	A	C	C	A	C	A	A						
Chlorine Water+	2% sat'd. sol'n.	A	A	A	B	A	A	A	A	C	C	A	C	A	A						

Chlorobenzene*#		C	C	C	C	C	C	C	C	C	C	A	A	A	B
Chlorofoam*#		B	C	C	C	C	C	C	C	C	C	A	A	A	A
Chlorosulphonic Acid	100%	C	C	C	C	C	C	C	C	C	C	C	B	C	A
Chrome Alum	sat'd.	A	A	A	A	A	A	A	A	A	A	A	A	A	A
Chromic Acid	80%	-	-	A	-	-	-	C	C	C	C	B	B	C	B
Chromic Acid	50%	A	B	A	A	A	B	B	B	B	C	A	B	C	B
Chromic Acid	10%	A	A	A	A	A	A	A	A	B	C	A	B	C	B
Cider*		A	A	A	A	C	C	-	-	-	A	A	A	A	-
Citric Acid*	sat'd.	A	A	A	A	A	A	-	B	A	A	A	A	A	A
Coconut Oil Alcohols*		A	A	A	A	A	A	A	A	A	A	A	A	A	A
Coffee		A	A	A	A	A	A	A	A	A	A	A	A	A	A
Cola Concentrates*		A	A	A	A	A	A	A	A	A	A	A	A	A	A
Copper Chloride	sat'd.	A	A	A	A	A	A	A	A	A	A	A	C	A	A
Copper Cyanide	sat'd.	A	A	A	A	A	A	A	A	A	A	A	B	B	B
Copper Fluoride	2%	A	A	A	A	A	A	A	A	A	A	A	A	A	A
Copper Nitrate	sat'd.	A	A	A	A	A	A	A	A	A	-	A	B	B	A
Copper Sulphate	sat'd.	A	A	A	A	A	A	A	A	-	A	A	B	A	A
Corn Oil*		A	A	A	A	A	A	A	A	A	A	A	A	A	A
Cottonseed Oil*		A	A	A	A	A	A	A	A	A	A	A	A	A	A
Cuprous Chloride	sat'd.	A	A	A	A	A	A	A	A	A	A	A	C	A	A
Detergents, Synthetic*		A	A	A	A	A	A	A	A	A	A	A	A	A	A
Developers, Photographic		A	A	A	A	A	A	A	A	-	-	-	A	A	A
Dextrin	sat'd.	A	A	A	A	A	A	A	A	A	A	A	A	A	A
Destrose	sat'd.	A	A	A	A	A	A	A	A	A	A	A	A	A	A
Diazo Salts		A	A	A	A	A	A	A	A	-	-	-	-	-	-
Dibutylphthalate*#		B	B	A	B	B	B	C	C	-	-	-	A	-	-
Dichlorobenzene*#		C	C	-	-	C	C	-	-	-	-	-	-	-	-
Diethyl Ketone*#		B	B	-	-	B	C	-	-	-	-	-	-	-	-
Diethylene Glycol*		A	A	A	A	A	A	C	C	A	A	A	A	A	B
Diglycolic Acid*		A	A	-	-	A	A	A	A	A	-	A	A	A	-
Dimethylamine		C	C	-	-	C	C	C	C	C	A	C	A	-	-
Disodium Phosphate		A	A	A	A	A	A	A	A	-	-	A	A	A	-
Emulsions, Photgraphic*		A	A	A	A	A	A	A	A	A	A	A	A	A	A
Ethyl Acetate*#	100%	B	C	B	B	B	C	C	C	B	C	C	A	A	A
Ethyl Alcohol*	100%	A	A	A	A	A	A	A	A	A	A	A	A	A	A
Ethyl Alcohol*	35%	A	A	A	A	A	A	A	A	A	A	A	A	A	A
Ethyl Benzene*#		C	C	C	C	C	C	-	-	-	-	-	A	-	-
Ethyl Chloride#		C	C	C	C	C	C	C	C	A	B	A	A	A	A
Ethyl Ether#		C	C	B	C	C	C	C	C	C	C	C	A	A	B
Ethylene Chloride*#		C	C	C	C	C	C	C	C	A	B	A	A	B	C
Ethylene Glycol*		A	A	A	A	A	A	A	A	A	A	A	A	A	B
Fatty Acids*		A	A	A	A	A	A	B	B	C	B	A	A	B	A
Ferric Chloride	sat'd.	A	A	A	A	A	A	A	A	A	B	A	C	A	B
Ferric Nitrate	sat'd.	A	A	A	A	A	A	A	A	A	A	A	A	A	B
Ferrous Chloride	sat'd.	A	A	A	A	A	A	A	A	A	A	A	C	A	B
Ferrous Sulphate		A	A	A	A	A	A	A	A	A	A	A	A	A	A
Fish Solubles*		A	A	A	A	A	A	A	A	A	A	A	A	A	A
Fluoboric Acid		A	A	A	A	A	A	A	A	A	A	A	C	C	A
Fluosillic Acid	conc.	A	B	A	B	A	A	A	A	A	A	A	B	C	A
Fluosillic Acid	32%	A	A	A	A	A	A	A	A	A	A	A	B	C	A

Formic Acid	all concentr.	A	A	A	A	A	A	A	A	A	A	C	C	C	A
Fructose	sat'd.	A	A	A	A	A	A	A	A	A	A	A	A	A	A
Fruit Pulp*		A	A	A	A	A	A	A	A	A	A	A	A	A	A
Furtural#	100%	B	C	C	C	C	C	C	C	B	C	C	B	B	A
Furfuryl Alcohol*#		B	C	C	C	C	C	-	-	-	-	A	A	-	-
Gallic Acid*	sat'd.	A	B	A	A	A	A	A	B	B	B	A	B	A	B
Gasoline*#		B	C	B	C	A	C	C	C	C	B	A	A	A	A
Glucose		A	A	A	A	A	A	A	A	A	A	A	A	A	A
Glycerine*		A	A	A	A	A	A	A	A	A	A	A	A	A	A
Glycol*		A	A	A	A	A	A	A	A	A	A	A	A	A	A
Glycolic Acid*	30%	A	A	A	A	A	A	A	A	A	A	A	A	A	A
Grape Sugar	sat'd. ag.	A	A	A	A	A	A	A	A	A	A	A	A	A	A
n-Heptane*#		B	B	-	-	A	C	C	A	C	A	A	A	A	A
Hexachlorobenzene		A	-	-	-	A	A	-	-	-	-	-	-	-	-
Hexanol, Tertiary*		A	A	-	-	A	A	-	-	-	-	B	A	A	-
Hydrobromic Acid	50%	A	A	A	A	A	A	A	A	A	B	A	C	A	B
Hydrobromic Acid	all conc.	A	A	A	A	A	A	A	A	A	-	A	C	C	A
Hydrobromic Acid	sat'd.	A	A	-	-	A	A	A	A	A	-	A	C	B	
Hydrochloric Acid		A	A	-	-	A	A	A	A	A	-	A	C	B	A
Hydrofluoric Acid*	60%	A	A	A	A	A	A	A	A	A	-	A	C	C	A
Hydrogen	100%	A	A	A	A	A	A	A	A	A	A	A	A	A	A
Hydrogen Chloride	dry gas	A	A	A	A	A	A	-	-	-	-	-	-	-	-
Hydrogen Peroxide	30%	B	B	A	-	A	A	A	A	-	-	A	B	B	A
Hydrogen Peroxide	10%	A	A	A	B	A	A	A	A	-	-	A	B	B	A
Hydrogen Sulphide		A	A	A	A	A	A	A	A	A	A	C	B	A	A
Hydroquinone		A	A	A	A	A	A	A	A	-	C	A	-	-	-
Hypochlorous Acid	conc.	A	A	A	A	A	A	A	A	-	-	A	-	A	A
Inks#		A	A	A	A	A	A	A	A	-	-	A	C	A	A
Iodine+	in kl sol'n	B	-	-	-	B	C	C	C	B	C	A	C	C	B
Isopropyl Alcohol	100%	-	-	A	A	A	A	A	A	-	A	A	A	A	A
Lead Acetate	sat'd.	A	A	A	A	A	A	A	A	A	A	A	A	A	A
Lead Nitrate		A	A	-	-	A	A	A	A	A	A	A	A	A	A
Lactic Acid*	20%	A	A	A	A	A	A	A	A	A	A	A	B	B	B
Linseed Oil*	100%	B	C	A	A	A	C	A	A		A	A	A	A	A
Magnesium Carbonate	sat'd.	A	A	A	A	A	A	A	A	A	A	A	A	A	A
Magnesium Chloride	sat'd.	A	A	A	A	A	A	A	A	A	A	A	A	A	A
Magnesium Hydroxide	sat'd.	A	A	A	A	A	A	A	A	A	A	A	A	A	A
Magnesium Nitrate	sat'd.	A	A	A	A	A	A	A	A	A	A	A	A	A	A
Magnesium Sulphate	sat'd.	A	A	A	A	A	A	A	A	A	A	A	A	A	A
Mercuric Chloride	40%	A	A	A	A	A	A	A	A	A	A	A	C	A	C
Mercuric Cyanide	sat'd.	A	A	A	A	A	A	B	A		A	A	C	A	
Mercury		A	A	A	A	A	A	B	A	A	A	A	A	A	A
Methyl Alcohol*	100%	A	A	A	A	A	A	A	A	B	B	C	A	A	C
Methylethyl Ketone*#	100%	B	C	A	B	B	C	C	C	A	C	C	A	A	A
Methylene Chloride*#	100%	C	C	B		C	C	C	C	C	C	C	A	A	B
Milk		A	A	A	A	C	C	A	A	A	A	A	A	A	A
Mineral Oils#		B	C	A	B	A	C	A	A	A	A	A	A	A	A
Molasses		A	A	A	A	A	A	A	A	C	A	A	A	A	A
Naptha*#		B	C			B	C	A	A	C	C	A	A	A	A

Naphthalene*#		B		A	A	C	C	C	C	C	C	A	A	A	A
Nickel Chloride	conc.	A	A	A	A	A	A	A	A	A	A	A	C	A	B
Nickel Nitrate	sat'd.	A	A	A	A	A	A	A	A	A	A	A	B	B	B
Nickel Sulphate	conc.	A	A	A	A	A	A	A	A	A	A	A	B	B	B
Nicotine*	dilute	A	A	A	A	A	A	A	A						
Nitric Acid	0-30%	A	A	C	C	A	A	A	A	B	A	A	A	A	A
Nitric Acid+	30-50%	A	B	C	C	A	B	B	B	B	A	A	A	A	A
Nitric Acid+	70%	A	B	C	C	A	B	C	C	C	A	A	A	A	A
Nitric Acid+	95-98%	C	C	C	C	C	C	C	C	C		A	A	A	A
Nitrobenzene*#	100%	C	C	C	C	C	C	C	C	C	C	B	A	A	C
n-Octane		A	A			A	A								
Oleic Acid		B	C	A	B	A	C	C	A	B	C	B	B	C	B
Oxalic Acid*	sat'd.	A	A	A	B	A	A	A	C	A	B	A	B	C	B
Perchloroethylene#		C	C			C	C	C	B	C	C	A	A	A	B
Phosphoric Acid	95%	A	A	A	A	A	B	B	A	B	B	A	B	B	A
Photographic Solutions		A	A	A	A	A	A	A	A	B	A	A	A	A	A
Plating Solutions*															
Brass		A	A	A	A	A	A	A	A	A	A	A	A	A	A
Cadium		A	A	A	A	A	A	A	A	C	C	A	A	C	A
Chromium		A	A	A	A	A	A	A	A		B	A	C	C	C
Copper		A	A	A	A	A	A	A	A		A	A	A	A	A
Gold		A	A	A	A	A	A	A	A		A	A	A	A	A
Indium		A	A	A	A	A	A	A	A		A	A			
Lead		A	A	A	A	A	A	A	A			A	C	C	A
Nickel		A	A	A	A	A	A	A	A			A	C	A	C
Rhodium		A	A	A	A	A	A	A	A			A	A	C	A
Silver		A	A		A	A	A	A	A			A	C	C	A
Tin		A	A	A	A	A	A	A	A			A	C	A	A
Zinc		A	A	A	A	A	A	A	A		A	A	C	A	B
Potassium Bicarbonate	sat'd.	A	A	A	A	A	A	A	A	A	A	A	B	A	B
Potassium Bromide	sat'd.	A	A	A	A	A	A	A	A	A	A	A	B	A	B
Potassium Bromate	10%	A	A	A	A	A	A	A	A	A	A	A	B	A	B
Potassium Carbonate		A	A	A	A	A	A	A	A	A	A	A	B	A	B
Potassium Chlorate	sat'd.	A	A	A	A	A	A	A	A	A	A	A	B	A	B
Potassium Chloride	sat'd.	A	A	A	A	A	A	A	A	A	A	A	B	A	B
Potassium Chromate	40%	A	A	A	A	A	A	A	A	A	A	A	B	A	B
Potassium Cyanide	sat'd.	A	A	A	A	A	A	A	A	A	A	A	B	A	B
Potassium Dichromate	40%	A	A	A	A	A	A	A	A	A	A	A	B	A	B
Potassium Ferri/Ferro Cyanide	sat'd.	A	A	A	A	A	A	A	A	A	A	A	B	A	B
Potassium Fluoride		A	A	A	A	A	A	A	A	A	A	A	B	A	B
Potassium Hydroxide	conc.	A	A	A	A	A	A	A	A	A	B	B	B	A	B
Potassium Nitrate	sat'd.	A	A	A	A	A	A	A	A	A	A	A	B	A	B
Potassium Perborate	sat'd.	A	A	A	A	A	A	A	A	A	A	A	B	A	B
Potassium Perchlorate	10%	A	A	A	A	A	A	A	A	A	A	A	B	A	B
Potassium Permanganate	20%	A	A	A	A	A	A	A	A	A	A	A	B	A	B
Potassium Persulphate	sat'd.	A	A			A	A	A	A	A	A	A	B	A	B

Potassium Sulphate	conc.	A	A	A	A	A	A	A	A	A	C	A	B	A	B								
Potassium Sulphide	conc.	A	A	A	A	A	A	A	A	A	C	A	B	A	B								
Potassium Sulphite	conc.	A	A	A	A	A	A	A	A	A	C	A	B	A	B								
Propargyl Alcohol*		A	A			A	A																
n-Propyl Alcohol*		A	A	A	A	A	A	A			A	A	A	A	A								
Propylene Dichloride*#	100%	C	C	C	C	C	C	A				A	C	A	B								
Propylene Glycol*		A	A			A	A	C			C	A	B	A	B								
Pyridine*		A		A		A	C	C	B	B	C	C	A	B	B								
Resorcinol	sat'd.	A	A			A	A																
Sallcylic Acid	sat'd.	A	A			A	A	A	A	A	A	A	A	A	A								
Sea Water		A	A	A	A	A	A	A	A	A	A	A	A	A	A								
Selenic Acid		A	A			A	A	A	A	A													
Shortening*		A	A	A	A	A	A	A	A	A	A	A	A	A	A								
Silver Nitrate Solution		A	A	A	A	A	A	A	A	A	A	A	A	A	A								
Soap Solution*	any con	A	A	A	A	A	A	A	A	A	A	A	A	A	A								
Sodium Acetate	sat'd.	A	A	A	A	A	A	B	B	A	B	C	B	A	A								
Sodium Benzoate	35%	A	A	A	A	A	A	A	A	A	A	A	A	A	A								
Sodium Biscarbonate	sat'd.	A	A	A	A	A	A	A	A	A	B	C	B	B	B								
Sodium Bisulphate	sat'd.	A	A	A	A	A	A	A	A	A	C	A	B	B	A								
Sodium Bisulphite	sat'd.	A	A	A	A	A	A	A	A	A	A	A	B	B	A								
Sodum Borate		A	A	A	A	A	A	A	A	A	A	A	B	A	A								
Sodium Bromide	dilute	A	A	A	A	A	A	A	A	A	A	A	A	A	A								
Sodium Carbonate	conc.	A	A	A	A	A	A	A	A	A	A	C	A	A	A								
Sodium Chlorate	sat'd.	A	A	A	A	A	A	A	A	A	A	A	B	A	B								
Sodium Chloride	sat'd.	A	A	A	A	A	A	A	A	A	A	A	C	A	A								
Sodium Cyanide		A	A	A	A	A	A	A	A	A	A	A	B	A	A								
Sodium Dichromate	sat'd.	A	A	A	A	A	A	A	A	A	A	A	A	A	A								
Sodium Ferri/Ferro Cyanide	sat'd.	A	A	A	A	A	A	A	A	A	A	A	A	A	A								
Sodium Fluoride	sat'd.	A	A	A	A	A	A	A	A	A	C	A	C	A	A								
Sodium Hydroxide	conc.	A	A	A	A	A	A	A	A	A	B	A	B	B	B								
Sodium Hypochlorite	1	A	A	A	B	B	B	B	B	B	C	A	C	C	B								
Sodium Nitrate		A	A	A	A	A	A	A	A	A	B	A	B	A	B								
Sodium Sulphate		A	A	A	A	A	A	A	A	A	B	A	B	A	B								
Sodium Sulphide	sat'd.	A	A	A	A	A	A	A	A	A	A	A	B	A	B								
Sodium Sulphite	sat'd.	A	A	A	A	A	A	A	A	A	A	A	B	A	B								
Stannic Chloride	sat'd.	A	A	A	A	A	A	A	B	C	A	A	C	A	B								
Stannous Chloride	sat'd.	A	A	A	A	A	A	A	A	A	A	A	A	A	B								
Starch Solution*	sat'd.	A	A	A	A	A	A	A	A	A	A	A	A	A	A								
Stearic Acid*	100%	A	A	A	A	A	A	B	B	B	B	A	A	A	B								
Sulphuric Acid	0-50%	A	A	A	B	A	A	A	A	B	C	A	C	C	B								
Sulphuric Acid +	70%	A	B	A	B	A	B	A	A	B	C	A	C	C	B								
Sulphuric Acid +	80%	A	C	C	C	A	B	A	A	B		A	C	C	B								
Sulphuric Acid +	96%	B	C	C		A	B	C	B	B	C	A	C	C	B								
Sulphuric Acid +	98-conc.	B	C	C		B	C	C	B	B	C	A	C	C	B								
Sulphuric Acid +	fuming	C	C	C	C	C	C	C	B	C	C	A	C	C	C								
Sulphurous Acid		A	A	A	A	A	A	A	A	B	C	A	B	A	B								
Tallow#		A		A	A	A	B					A	A										
Tannic Acid*	sat'd.	A	A	A	A	A	A	A	A	A	B	A	A	A	B								
Tartaric Acid		A	A	A	A	A	A	A	A	B	B	A	C	A	B								
Tetrolydrofuran*#		B	C	C	C	C	C	C	C	B	C	C	A	A	A								
Titanium Tetrachloride*	sat'd.	C				C	C						A										

Toluene*		B	B	C	C	C	C	C	C	C	C	C	A	A	A				
Trichloroethylene*#		C	C	C	C	C	C	C	C	C	C	A	B	A	B				
Triethylene Glycol*		A	A			A	A						A	A	A				
Trisodium Phosphate	sat'd.	A	A	A	A	A	A	A	A	A	A	A	A	A	A				
Turpentine#		C	C	C	C	C	C	B	B	C	C	A	A	B	B				
Urea	30%	A	A	A	A	A	A	B	B				A						
Urine		A	A	A	A	A	A	A	A	A	C	A	A						
Vanilla Extract*		A	A	A	A	A	A												
Vinegar		A	A	A	A	A	A	A	A	A	C	A	A	A	A				
Water		A	A	A	A	A	A	A	A	A	A	A	A	A	A				
Wetting Agent*		A	A	A	A	A	A												
Whiskey*		A	A	A	A	C	C	A	A	A	A	A	A	A	A				
Wines*		A	A	A	A	A	C	C	A	A	A	A	A	A	A				
Xylene#		C	C	C	C	C	C	C	C	C	C	C	A	A	A				
Yeast		A	A	A	A	A	A	A	A	A	A	A	A	A	A				
Zinc Bromide	sat'd.	A	A			A	A	A	A	A	A	A	A	A	A				
Zinc Carbonate	sat'd.	A	A			A	A	A	A	A	A	A	A	A	A				
Zinc Chloride	sat'd.	A	A	A	A	A	A	A	A	A	A	A	A	A	A				
Zinc Oxide	sat'd.	A	A	A	A	A	A	A	A	A	A	A	A	A	A				
Zinc Stearate		A	A			A	A	A	A	A	A	A	A	A	A				
Zinc Sulphate	sat'd.	A	A	A	A	A	A	A	A	A	A	A	A	A	A				

AlltanksCom LLC.

Ask for Art Woods

Email Art at sales@tanksystems.com

Mail: *PO Box 680747 Houston, Texas 77268*

Ship: *32926 Tamina - Magnolia, Texas 77354*

Phones: *800.537.9444*

01/13/2013

INSPECTION CHECKLIST FOR INDUSTRIAL TANKS

Work Order Number 344118 SO Number: 142623 Order Qty: 1 Part Number I2535002988 10

Tank Description: Size 12500 V SUMO

Specific Gravity 1.5 Material HD/NAT Serial Number 130127 5070

Circle YES or NO or NA Below as Required

Audit: (Yes) No If yes, attach audit. Correct Audit (600 psi) 750 psi Other _____

Hydro test: Yes (No) Percent Gel test 65% minimum: _____ or NA

Drop dart: Pass Fail NH/NF

Sumo Test: (Pass) Fail NA What psi 50 How long 35 min

IF THIS IS A NO HOLES NO FITTING TANK SKIP SECTIONS A & B. NHNF: Yes

SECTION A - FITTINGS – SPECIFICATION:

Note: Proper application and installation of fittings are critical to the success of an SII tank. Please follow this procedure.

Is the application correct? Circle YES or NO or NA

- Are we using the correct gaskets per the order? Viton or Epdm
- Is the material correct for encapsulated bolts? Stainless (natural) Hastaloy (yellow) Titanium (green)
- Do the pvc fitting U-vents, siphon tubes, etc. have enough glue? (see evidence in the joints) . . Yes No NA

SECTION B - FITTINGS – LOCATION:

- Fitting layout per cut sheet correct? . . . . . Yes No

If no, explain discrepancies _____

Are the hole sizes correct for the fittings? . . . . . Yes No

Are the gasket areas smooth and even thicknesses on the inside of the tank? (no bumps) . . . . . Yes No

Have the fittings been torque to 1/3 compression on the gasket? . . . . . Yes No

If no, explain (hand tight), etc. _____

SECTION C - EXTRA'S – SUPPLEMENTAL HARDWARE: (includes ladders, down tubes, sight gages, additional plumbing, etc.)

The following have been installed and found to fit and function properly.

Level sensor Y or N Settings: Tank height ____ Fluid level ____ Gallons per inch ____
Down pipe Y or N Welds tested with soft mallet Y or N

Other Items

All items per line inst/Boxed pic taken AV 1-18-13

one box to ship inside tank

Tank washed inside/out /one Box placed inside tank AV 1-25-13

Final Buyoff: Production _____ Quality BC 1-25-13

(I have checked the above mentioned tank and documentation and have found all to be acceptable.)

SII "12500V" 142" G-SERIES VERTICAL, CONE TOP TANK

16.36 OVER ALL TANK HEIGHT (FEET)
600 TENSILE STRENGTH (PSI)
15.11 SIDE WALL HEIGTH (FEET)
142 DIAMETER (INCHES)
1.5 SPECIFIC GRAVITY
0.45 AVG. THICKNESS TOP (INCHES)
BOTTOM THICKNESS (INCHES)
FEET FROM OUT SIDE EDGE

0.7	0.5 " #	747
0.6	1 " #	752
0.5	2 " #	755
0.4	CENTER #	590

15 DOME HEIGHT (INCHES)
574.01 CAP. IN DOME TOP
12779.2 MIN. TANK CAP.(GAL.)
CHARGE WEIGHT (LBS.)
_____ OVEN CYCLE TIME (MIN)
_____ OVEN TEMP. (DEG."F")
_____ DELAY (MIN.)
_____ COOLING AIR (MIN.)
_____ COOLING WATER (MIN.)
_____ COOLING AIR (MIN)
_____ OVEN DAMPER
_____ MACHINE/ARM ROTATION

Am Process

SO 142623

DIST.FROM BOTTOM(FT)	DESIGN WALL		SIDE THICKNESS CUTOUT 9.29	18.59	27.88 (FEET)
15	0.30	# #			
14	0.30	# #			
13	0.30	# #			
12	0.30	# #			
11	0.32	# #			
10	0.39	# #			
9	0.47	# #			
8	0.55	# #			
7	0.62	# #			
6	0.70	# #			
5	0.78	# #			
4	0.85	# #	94		88
3	0.93	# #	93		97
2	1.01	# #	96		96
1	1.08	# #	103		108
0.5	1.12	# #	145		138

DATE: 1-16-13
SERIAL #: 130127500
POWDER TYPE: Exxon
INSTRUMENT CALIBRATED TO
CUTOUT:
LOT #:
PART COLOR: NAT
PIGMENT WEIGHT (GRAMS):
GEL %:
DROP DART WEIGHT:
DROP DART HEIGHT:
DROP DART TEMPERATURE:
DROP DART RESULTS:
Q.A. PERSONNEL:
COMMENTS:

Top View

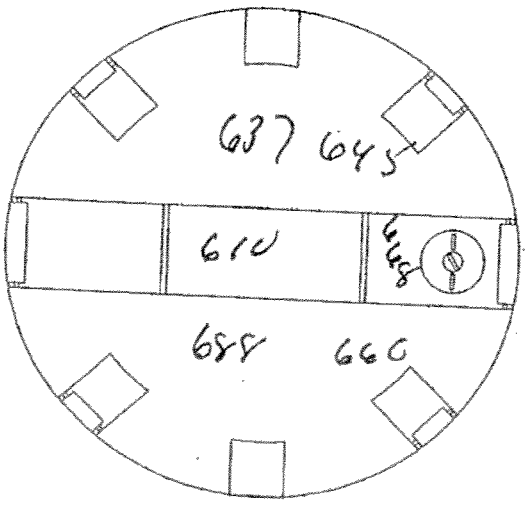

Bottom View

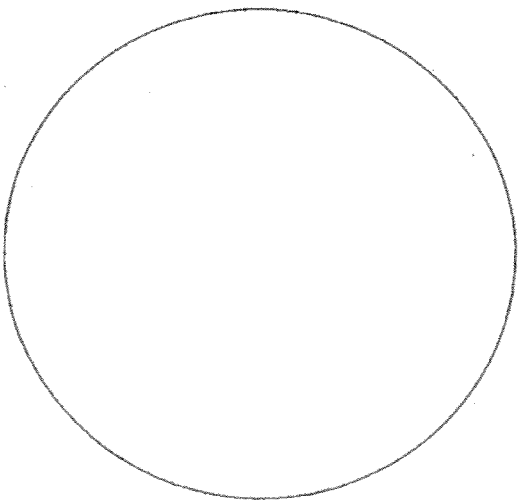

ALL TANKS
PO #12-986

TANK 2 OF 4

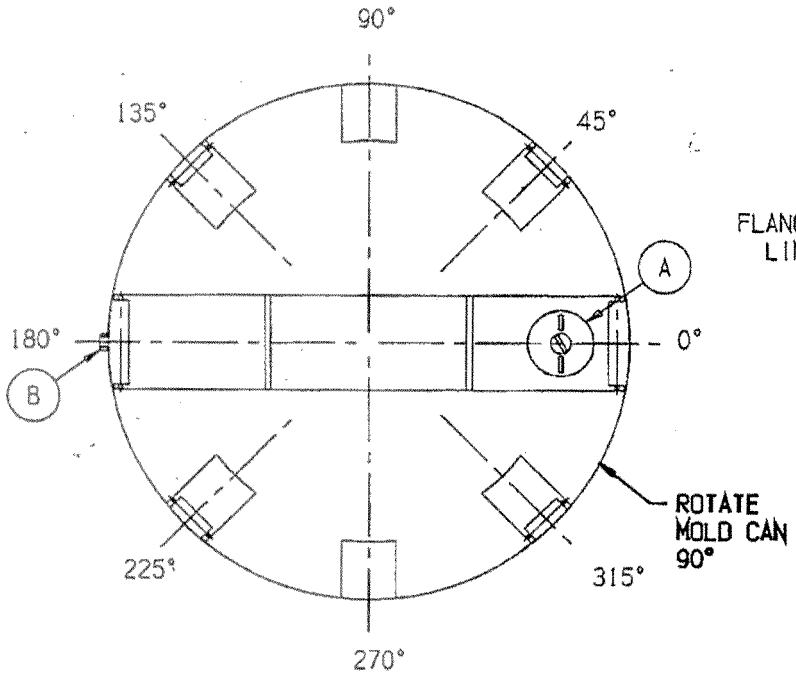

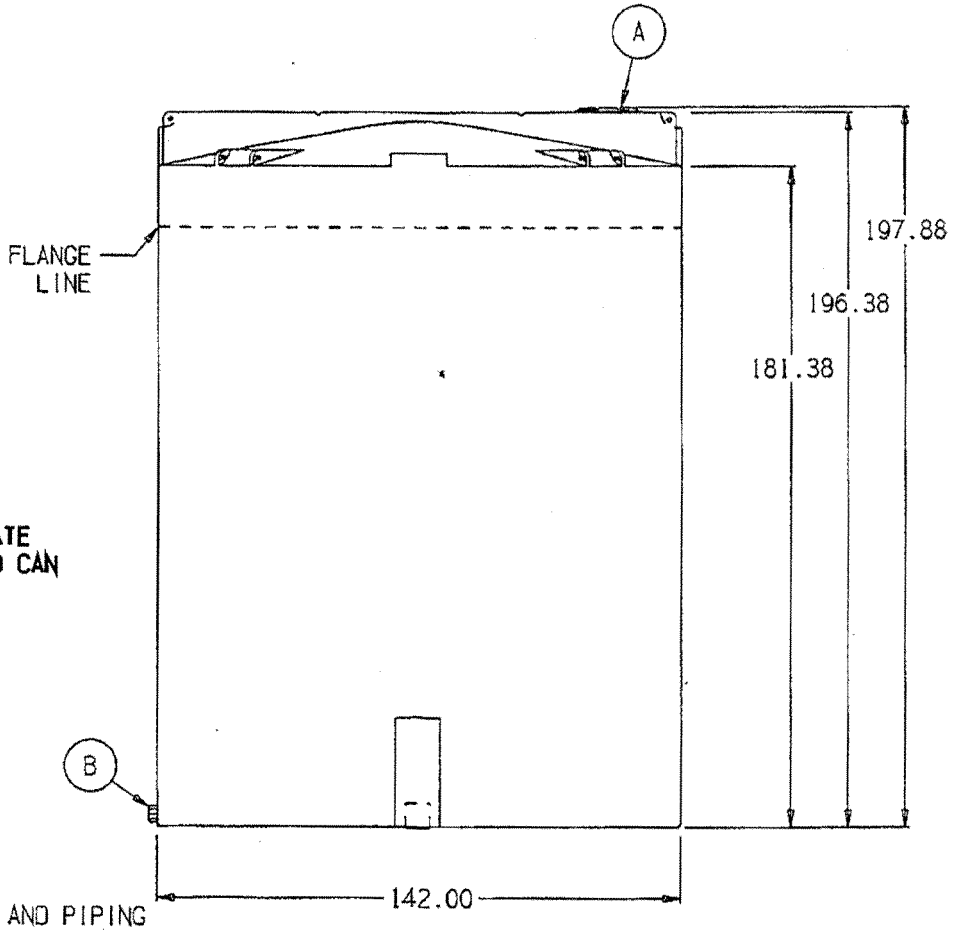

NOTE:
ADEQUATE CLEARANCE MUST BE ALLOWED FOR S.U.M.O. FITTING AND PIPING ACCESSORIES. A NOTCH IN THE TANK SUPPORT PAD MAY BE ADVISABLE. ALL EXTERNAL PIPING MUST BE INDEPENDENTLY SUPPORTED.

A. 24" PE THREADED-VENTED MANWAY W/22" ACCESS [P/N 34700352]
B. 3" S.U.M.O. W/SS INSERT, VITON O-RINGS & PVC ADAPTER [P/N 34700299]
B. ASM 3" CPVC SUMO ADAPTER [P/N 35900511]

* BASE FITTINGS TO BE LEFT INSTALLED AT TIME OF SHIPMENT PER SII PROCEDURE
* Consult Snyder's Guidelines for Use and Installation prior to delivery. Available on-line at www.snydernet.com

ALL DIMENSIONS, DESIGNS, AND INFORMATION ON THIS PRINT MUST BE CONSIDERED PROPRIETARY TO SNYDER INDUSTRIES, INC. AND MAY NOT BE USED, COPIED, OR DISTRIBUTED WITHOUT WRITTEN PERMISSION OF AN OFFICER (OR HIS AGENT) OF THE FIRM.

APPROVED: [signature] 12/21/12

SIGNATURE: _____ DATE: ____
DRAWING NOT VALID UNLESS SIGNED
(all dimensions in inches)

SNYDER INDUSTRIES INC.

12,500 GALLON FLAT BOTTOM TANK

© SNYDER INDUSTRIES, INC., 2012

PART # [signature] 12/19
TANK: 5350011N97401
HDLPE/NATURAL/1.5 SG
ROTATE MOLD CAN 90°
REF#: 29881 12/19/12

13012750 70 OK to cut DP 1/18/13

tobey wade
STRUCTURAL ENGINEERS

RECEIVED
SEP 24 2013
ENVIRONMENTAL PROTECTION

September 20, 2013
Project No. R405-13-13

Ms. Tracy Buono
Facility/Operations Manager
PSC FERNLEY FACILITY
2095 Newlands Drive East
Fernley, NV 89408

RE: TANK 307 CERTIFICATION

Dear Ms. Buono:

In accordance with the Fernley Facility Amended Tank Replacement Plan dated December 17, 2012, and Appendix D-6 of the pending July 2012 RECRA Permit, each new tank is required to be certified by Independent Registered Professional Engineers (IRPE's) prior to being placed into service. This letter has been prepared to document the evaluation of Tank 307 as performed by Tobey-Wade Consulting.

Background

Tank 307 is a virgin linear polyethylene tank as manufactured by Snyder Industries, Inc. and it has a 6,500 gallon capacity. Snyder Industries has provided data relative to the tank's strength.

Jaik Choi Associates conducted a structural evaluation of the tank to determine the foundation requirements under static and dynamic (seismic) loads. Jaik Choi Associates also conducted a stability analysis and designed anchorage for the tank.

Certification of the tank shell's compatibility with the proposed waste stream has been provided by others.

Findings

Based on our evaluation, the following systems are hereby certified as being in compliance with the Amended Tank Replacement plan:

- Tank 307 has sufficient strength to contain the proposed waste materials without rupturing based on wall thickness information provided by Snyder Industries.

NEVADA OFFICE
648 LANDER STREET ■ RENO, NEVADA 89509 ■ TEL: (775) 324.7757 ■ FAX: (775) 324.7797

- Tank 307 is situated on a reinforced concrete foundation system which is capable of adequately supporting the tank and its contents under static and dynamic conditions based on the analysis performed by Jaik Choi Associates.

- Tank 307 is located in an area with sufficient secondary containment as required by 40 CFR Ch. I, 264.193.

- Tank 307 is anchored to resist overturning when subjected to site-specific 2006 International Building Code level seismic events based on the analysis performed by Jaik Choi Associates.

- Tank 307 is anchored to prevent sliding when subjected to site-specific 2006 International Building Code level seismic events based on the analysis performed by Jaik Choi Associates.

- The process piping fill and discharge connections have been inspected and found to be undamaged and with no evidence of leakage. The piping connections are adequately attached to the tank to prevent displacement during an earthquake. The associated Process Piping inspection form is attached.

- Special Inspection of the epoxy anchor bolt installation was performed as required by the International Building Code. Copies of the Special Inspection reports are attached.

- Tank 307 has been subjected to a 24-hour leak test and found to be watertight. The Tank Leakage Test results are included in the Tank Inspection Form, copy attached.

- The exterior of Tank 307's shell wall has been inspected and found to be undamaged. The Tank Shell Inspection results are included in the Tank Inspection Form, copy attached.

Tobey-Wade Consulting witnessed the tank leakage test and conducted the tank shell inspection, under my direct supervision. Special Inspections were performed by inspectors from Nortech Consultants based on anchorage requirements provided by Jaik Choi Associates.

Certification Statement

I certify under penalty of law that this report and all attachments were prepared under my direction and supervision in accordance with a system developed to assure that qualified personnel properly gather and evaluate the information submitted. Based on my inquiry of the person or persons who manage the system or those persons directly responsible for gathering the information, the information, submitted is, to the best of my knowledge and belief, true, accurate, and complete. I am aware that there are significant penalties for submitting false information, including the possibility of fines and imprisonment for knowing violations.

This report has been prepared in accordance with accepted engineering practices and is subject to the assumptions and limitations stated in the report. Also note that this certification covers the aforementioned aspects of Tank 307 only.

Please feel free to contact me at your convenience should you have any questions relating to our findings.

Sincerely,
TOBEY-WADE CONSULTING

Terrence R. Tobey

TERRENCE R. TOBEY, P.E., S.E.
Principal Structural Engineer

Exp.
6.30.14

Tank Data Sheet

RCRA Regulated? YES

Tank Location: Dewatering Area

Tank Name: Post-Treatment Tank

Tank Numbers: 307

Process Description: Storage/Settling of Post-Treatment Effluent

Vessel Fluid: Neutralized/Treated Liquids w/Treatment Chemical Residuals

Specific Gravity: <1.50

Freeboard At Working Vol (ft cubed): 66.84

Normal Operating Pressure: ATMOSPHERIC

Temperature (F°) AMBIENT

	Material	Thickness	Type
Bottom	Virgin linear polyethylene	0.85" avg.	flat
Shell	Virgin linear polyethylene	0.7" avg.	CYLINDRICAL-VERTICAL
Roof	Virgin linear polyethylene	0.3" avg.	dome

Working Volume (USG): 6,600 gallons

Nominal Volume (USG): 7,100 gallons

Tank O.D. (ft): 10

Design Code Used: IBC 2006 AISC 13th Edition

Insulation: NONE

Method of Construction: rotational molding process

Tank Height or Length (ft): 13' 2"

Date In Service: PLANNED TANKS

Anchorage: seismic restraints bolted to concrete. Anchorage designs per 2006 IBC.

Connections:

Item No:	Size (In.)	Gasket	Description
A	24		PE Threaded-vented manway w/22" access
B	3		S.U.M.O w/ss insert, viton o-rings & PVC adapter
			ASM 3" CPVC SUMO adapter

Tank Sketch:

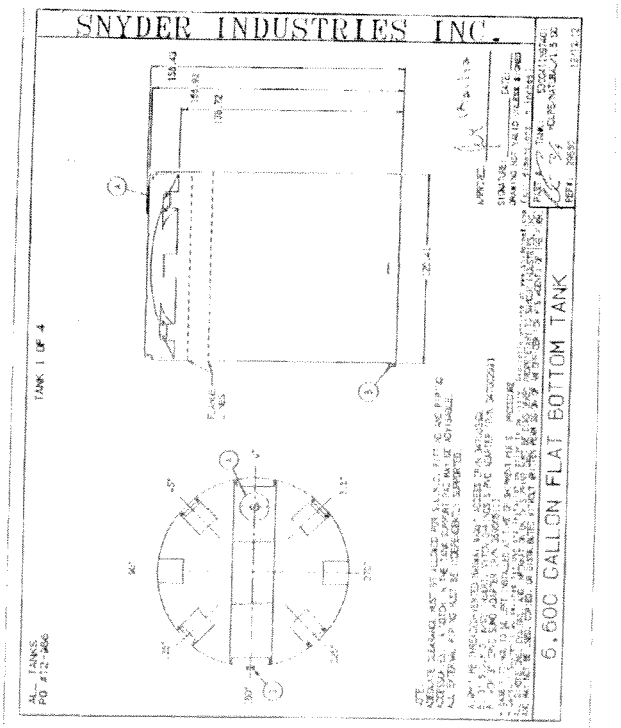

Interior Coating: high density linear polyethylene resin as manufactured by ExxonMobil Chemical

Exterior Coating: high density linear polyethylene resin as manufactured by ExxonMobil Chemical

Tank Mfger: Snyder Industries Inc.

Remarks:

tobey wade
STRUCTURAL ENGINEERS

April 4, 2013
Project No. R405-06-13

Ms. Tracy Buono
Facility/Operations Manager
PSC FERNLEY FACILITY
2095 Newlands Drive East
Fernley, NV 89408

RE: TANK 307 INTERIM CERTIFICATION

Dear Ms. Buono:

In accordance with the Fernley Facility Amended Tank Replacement Plan dated December 17, 2012, and Appendix D-6 of the pending July 2012 RECRA Permit, each new tank is required to be certified by Independent Registered Professional Engineers (IRPE's) prior to being placed into service. This letter has been prepared to document the evaluation of Tank 307 as performed by Tobey-Wade Consulting.

It should be noted that Tank 307 currently has permanent bulkhead fittings with valves for connection of temporary discharge lines. A temporary fill line is attached to a permanent bulkhead fitting. The permanent process piping servicing Tank 307 will be installed in Phase 3 as outlined in the above-referenced documents. Accordingly, this certification is being provided as an interim certification. Final certification of Tank 307 will be provided after the permanent piping and all other associated permanent systems have been installed and inspected.

Background

Tank 307 is a virgin linear polyethylene tank as manufactured by Snyder Industries, Inc. and it has a 6,500 gallon capacity. Snyder Industries has provided data relative to the tank's strength.

Jaik Choi Associates conducted a structural evaluation of the tank to determine the foundation requirements under static and dynamic (seismic) loads. Jaik Choi Associates also conducted a stability analysis and designed anchorage for the tank.

Certification of the tank shell's compatibility with the proposed waste stream has been provided by others.

NEVADA OFFICE
648 LANDER STREET ■ RENO, NEVADA 89509 ■ TEL: (775) 324.7757 ■ FAX: (775) 324.7797

Findings

Based on our evaluation, the following systems are hereby certified as being in compliance with the Amended Tank Replacement plan:

- Tank 307 has sufficient strength to contain the proposed waste materials without rupturing based on wall thickness information provided by Snyder Industries.
- Tank 307 will be situated on a reinforced concrete foundation system which is capable of adequately supporting the tank and its contents under static and dynamic conditions based on the analysis performed by Jaik Choi Associates.
- Tank 307 will be located in an area with sufficient secondary containment as required by 40 CFR Ch. I, 264.193.
- Tank 307 is anchored to resist overturning when subjected to site-specific 2006 International Building Code level seismic events based on the analysis performed by Jaik Choi Associates.
- Tank 307 is anchored to prevent sliding when subjected to site-specific 2006 International Building Code level seismic events based on the analysis performed by Jaik Choi Associates.
- The process piping fill and discharge connections have been inspected and found to be undamaged and with no evidence of leakage. The piping connections are adequately attached to the tank to prevent displacement during an earthquake. The associated Process Piping inspection form is attached.
- Special Inspection of the epoxy anchor bolt installation was performed as required by the International Building Code. Copies of the Special Inspection reports are attached.
- Tank 307 has been subjected to a 24-hour leak test and found to be watertight. The Tank Leakage Test results are included in the Tank Inspection Form, copy attached.
- The exterior of Tank 307's shell wall has been inspected and found to be undamaged. The Tank Shell Inspection results are included in the Tank Inspection Form, copy attached.

Tobey-Wade Consulting witnessed the tank leakage test and conducted the tank shell inspection, under my direct supervision. Special Inspections were performed by inspectors from Nortech Consultants based on anchorage requirements provided by Jaik Choi Associates.

Certification Statement

I certify under penalty of law that this report and all attachments were prepared under my direction and supervision in accordance with a system developed to assure that qualified personnel properly gather and evaluate the information submitted. Based on my inquiry of the person or persons who manage the system or those persons directly responsible for gathering the information, the information, submitted is, to the best of my knowledge and belief, true, accurate, and complete. I am aware that there are significant penalties for submitting false information, including the possibility of fines and imprisonment for knowing violations.

This report has been prepared in accordance with acceptable engineering practices and is subject to the assumptions and limitations stated in the report. Also note that this certification covers the aforementioned aspects of Tank 307 only.

Please feel free to contact me at your convenience should you have any questions relating to our findings.

Sincerely,
TOBEY-WADE CONSULTING

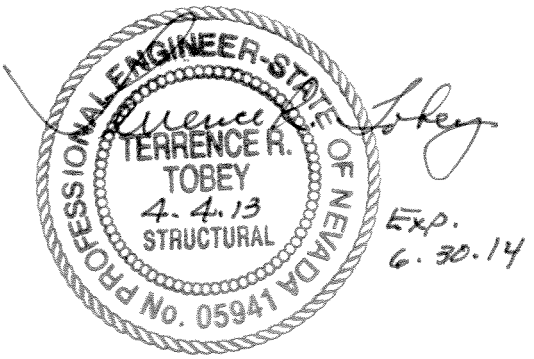

TERRENCE R. TOBEY, P.E., S.E.
Principal Structural Engineer

TANK INSPECTION FORM

OWNER: Philip Services Corporation / 21 EMI
PSC Fernley Facility
2095 Newlands Drive East
Fernley, NV 89408
(775)575-2760

TANK NO.: 307

TANK SHELL INSPECTION

Date Inspected: February 19, 2013

Findings: Shell is in good condition (2 minor vertical scratches on east side - 1/32" wide x 1/32" deep)

TANK ANCHORAGE STRUCTURAL OBSERVATION

Type of Anchorage System: See Drawing D-24688, Snyder Industries, 1.5 SG

Date Inspected: February 19, 2013

# of Anchor Plates: 4

AB Type, Diameter and Number/plate: Hilti Epoxy, 6 ABs/plate, 1" ϕ ABs

Plate Contact with Tank: Yes

Special Inspection Completed? Yes

TANK LEAKAGE TEST

Date Filled: February 18/19, 2013, 3:30 pm

Date of Re-inspection: 2/20/13

Shell Leakage? None observed

Leakage on Floor/Drain Pan at Manifold? No

Water Level below Inspection Hatch: 25 1/16" below inner lip

Water Level below Inspection Hatch: 25 1/16" Below Inner Lip

INSPECTOR: Lawrence Tobey DATE: 2.19.13

INSPECTOR: Brandon DATE: 2-20-2013

NORTECH Geotechnical/Civil Consultants, Ltd.

FIELD CONSTRUCTION INSPECTION REPORT

PROJECT PSC Environmental JOB NO. 14441-28C

LOCATION 2095 Newlands Drive, Fernley, Nevada REPORT NO. 3

CONTRACTOR L & H Concrete WEEK ENDING 01-26-13

Work Description

January 21 - Inspected steel reinforcement in tank slabs (T-5 & 307). Rebar was placed in accordance with structural details on approved plans. I performed epoxy inspection of rebar dowel hooks (#3's) in tank slab. Holes were drilled to proper embed depth (4") and cleaned out thoroughly. Epoxy and dowels were placed in accordance with structural details on approved plans, I was on site for concrete pour on tank slabs and I cast one set of concrete cylinders and I performed one slump test. (MSV)

January 22 - Transported previously cast cylinders to the laboratory for testing. (MSV)

GEOTECHNICAL/CIVIL CONSULTANTS, LTD. 300 Western Road, #3, Reno, NV 89506 (775) 852-7475 FAX (775) 852-7488

REPORT OF CONCRETE CYLINDER TEST

Project Number: 14441-28C
Project: PSC Environmental
Client: Equipment Pro, Inc.
Address: 721 Parkwood Dr., Ste. Genevieve, MO 63670

Report Number: 4

Attn:

FIELD TEST CONDITIONS AND RESULTS (ASTM C31)

Date Placed: 1/21/2013
Time Sampled: 8:40 AM
Location of Sample: Tank Slabs, T-5 and 307
Supplier: 3D
Truck Number: 482
Mix Number: 1126RP
Design Strength: 4000 psi
Time Batched: 7:38 AM
Batch Size: 7 yds.
Slump: 4 in. (ASTM C 143)
Concrete Temp: 66 °F
Water Added: 0 gal.

Ticket Number: 36034

Time Placed: 8:40 AM

Air Content: N/A % (ASTM C 173)
Ambient Temp: 20 °F
Technician: MSV

LABORATORY TEST RESULTS (ASTM C39)

Specimen	Test Date	Age	Load	Diameter	Area	Strength	Percent of Design	Type of Fracture
602	1/28/2013	7	52800	4.00	12.57	4200		1
603	2/18/2013	28	74740	4.00	12.57	5950	149%	1
604	2/18/2013	28	74390	4.00	12.57	5920	148%	1
605		0		4.00	12.57			

Remarks:

Copies to:

Reported by: Kent Seegmiller
Kent Seegmiller
Concrete Laboratory Manager

NORTECH Geotechnical/Civil Consultants, Ltd.

FIELD CONSTRUCTION INSPECTION REPORT

PROJECT PSC Environmental JOB NO. 14441-28C

LOCATION 2095 Newlands Drive, Fernley, Nevada REPORT NO. 4

CONTRACTOR L & H Concrete WEEK ENDING 02-16-13

Work Description

February 11 - On site for epoxy inspection on anchor bolts for base plates (support tanks) for pad T5 and 307. Anchor bolts (1") and epoxy were placed in accordance with structural engineered drawings. Holes were drilled to proper embed depth of 9" and cleaned out thoroughly. (MSV)

PROCESS PIPING INSPECTION FORM

Philip Services Corporation / 21 EMI
PSC Fernley Facility
2095 Newlands Drive East
Fernley, NV 89408
(775)575-2760

Tank Number: 307

Date Inspected: April 3, 2013

Fill Line Assembly:

Number of Fill Line Assemblies: 1 Fill Line Assembly

Description: A bulkhead fitting at the top of the tank is the only permanent piping in the fill line assembly. A temporary fill line is attached to the bulkhead fitting. There was no damage to the process pipe connection or to the tank shell. No evidence of leaking found. The permanent piping is secured and stable.

Discharge Line Assembly:

Number of Discharge Line Assemblies: 2 Discharge Line Assemblies

Description: The bulkhead fitting to the threaded valve connection is the only permanent piping in the discharge line assembly. A temporary discharge line is attached to the valve connection. There was no damage to the process piping connection or to the tank shell. No evidence of leaking found. The permanent piping is secured and stable.

INSPECTOR: Brian Gee DATE: April 3, 2013

tobey wade
STRUCTURAL ENGINEERS

August 7, 2013
Project No. R405-13-13

Ms. Tracy Buono
Facility/Operations Manager
PSC FERNLEY FACILITY
2095 Newlands Drive East
Fernley, NV 89408

RE: TANK 307 CERTIFICATION

Dear Ms. Buono:

In accordance with the Fernley Facility Amended Tank Replacement Plan dated December 17, 2012, and Appendix D-6 of the pending July 2012 RECRA Permit, each new tank is required to be certified by Independent Registered Professional Engineers (IRPE's) prior to being placed into service. This letter has been prepared to document the evaluation of Tank 307 as performed by Tobey-Wade Consulting.

Background

Tank 307 is a virgin linear polyethylene tank as manufactured by Snyder Industries, Inc. and it has a 6,500 gallon capacity. Snyder Industries has provided data relative to the tank's strength.

Jaik Choi Associates conducted a structural evaluation of the tank to determine the foundation requirements under static and dynamic (seismic) loads. Jaik Choi Associates also conducted a stability analysis and designed anchorage for the tank.

Certification of the tank shell's compatibility with the proposed waste stream has been provided by others.

Findings

Based on our evaluation, the following systems are hereby certified as being in compliance with the Amended Tank Replacement plan:

- Tank 307 has sufficient strength to contain the proposed waste materials without rupturing based on wall thickness information provided by Snyder Industries.

- Tank 307 will be situated on a reinforced concrete foundation system which is capable of adequately supporting the tank and its contents under static and dynamic conditions based on the analysis performed by Jaik Choi Associates.

- Tank 307 will be located in an area with sufficient secondary containment as required by 40 CFR Ch. I, 264.193.

- Tank 307 is anchored to resist overturning when subjected to site-specific 2006 International Building Code level seismic events based on the analysis performed by Jaik Choi Associates.

- Tank 307 is anchored to prevent sliding when subjected to site-specific 2006 International Building Code level seismic events based on the analysis performed by Jaik Choi Associates.

- The process piping fill and discharge connections have been inspected and found to be undamaged and with no evidence of leakage. The piping connections are adequately attached to the tank to prevent displacement during an earthquake. The associated Process Piping inspection form is attached.

- Special Inspection of the epoxy anchor bolt installation was performed as required by the International Building Code. Copies of the Special Inspection reports are attached.

- Tank 307 has been subjected to a 24-hour leak test and found to be watertight. The Tank Leakage Test results are included in the Tank Inspection Form, copy attached.

- The exterior of Tank 307's shell wall has been inspected and found to be undamaged. The Tank Shell Inspection results are included in the Tank Inspection Form, copy attached.

Tobey-Wade Consulting witnessed the tank leakage test and conducted the tank shell inspection, under my direct supervision. Special Inspections were performed by inspectors from Nortech Consultants based on anchorage requirements provided by Jaik Choi Associates.

Certification Statement

I certify under penalty of law that this report and all attachments were prepared under my direction and supervision in accordance with a system developed to assure that qualified personnel properly gather and evaluate the information submitted. Based on my inquiry of the person or persons who manage the system or those persons directly responsible for gathering the information, the information, submitted is, to the best of my knowledge and belief, true, accurate, and complete. I am aware that there are significant penalties for submitting false information, including the possibility of fines and imprisonment for knowing violations.

This report has been prepared in accordance with accepted engineering practices and is subject to the assumptions and limitations stated in the report. Also note that this certification covers the aforementioned aspects of Tank 307 only.

Please feel free to contact me at your convenience should you have any questions relating to our findings.

Sincerely,
TOBEY-WADE CONSULTING

Terrence R. Tobey

TERRENCE R. TOBEY, P.E., S.E.
Principal Structural Engineer

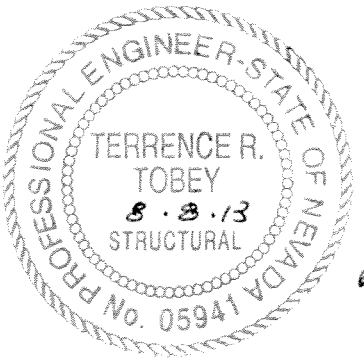

Exp.
6 · 30 · 14

TANK INSPECTION FORM

OWNER: Philip Services Corporation / 21 EMI
PSC Fernley Facility
2095 Newlands Drive East
Fernley, NV 89408
(775)575-2760

TANK NO.: 307

TANK SHELL INSPECTION

Date Inspected: February 19, 2013

Findings: Shell is in good condition (2 minor vertical scratches on east side - 1/32" wide x 1/32" deep)

TANK ANCHORAGE STRUCTURAL OBSERVATION

Type of Anchorage System: See Drawing D-24688, Snyder Industries, 1.5 SG

Date Inspected: February 19, 2013

# of Anchor Plates: 4

AB Type, Diameter and Number/plate: Hilti Epoxy, 6 ABs/plate, 1" ϕ ABs

Plate Contact with Tank: Yes

Special Inspection Completed? Yes

TANK LEAKAGE TEST

Date Filled: February 18/19, 2013, 3:30 pm

Date of Re-inspection: 2/20/13

Shell Leakage? None observed

Leakage on Floor/Drain Pan at Manifold? No

Water Level below Inspection Hatch: 25 1/16" below inner lip

Water Level below Inspection Hatch: 25 1/16" Below Inner Lip

INSPECTOR: Terrence Tobey DATE: 2.19.13

INSPECTOR: Brandon DATE: 2-20-2013

NORTECH Geotechnical/Civil Consultants, Ltd.

FIELD CONSTRUCTION INSPECTION REPORT

PROJECT PSC Environmental JOB NO. 14441-28C

LOCATION 2095 Newlands Drive, Fernley, Nevada REPORT NO. 3

CONTRACTOR L & H Concrete WEEK ENDING 01-26-13

Work Description

January 21 - Inspected steel reinforcement in tank slabs (T-5 & 307). Rebar was placed in accordance with structural details on approved plans. I performed epoxy inspection of rebar dowel hooks (#3's) in tank slab. Holes were drilled to proper embed depth (4") and cleaned out thoroughly. Epoxy and dowels were placed in accordance with structural details on approved plans, I was on site for concrete pour on tank slabs and I cast one set of concrete cylinders and I performed one slump test. (MSV)

January 22 - Transported previously cast cylinders to the laboratory for testing. (MSV)

GEOTECHNICAL/CIVIL CONSULTANTS, LTD. 300 Western Road, #3, Reno, NV 89506 (775) 852-7475 FAX (775) 852-7488

REPORT OF CONCRETE CYLINDER TEST

Project Number: 14441-28C
Report Number: 4
Project: PSC Environmental
Client: Equipment Pro, Inc.
Address: 721 Parkwood Dr., Ste. Genevieve, MO 63670

Attn:

FIELD TEST CONDITIONS AND RESULTS (ASTM C31)

Date Placed: 1/21/2013
Time Sampled: 8:40 AM
Location of Sample: Tank Slabs, T-5 and 307
Supplier: 3D
Truck Number: 482
Ticket Number: 36034
Mix Number: 1126RP
Design Strength: 4000 psi
Time Batched: 7:38 AM
Time Placed: 8:40 AM
Batch Size: 7 yds.
Slump: 4 in. (ASTM C 143)
Air Content: N/A % (ASTM C 173)
Concrete Temp: 66 °F
Ambient Temp: 20 °F
Water Added: 0 gal.
Technician: MSV

LABORATORY TEST RESULTS (ASTM C39)

Specimen	Test Date	Age	Load	Diameter	Area	Strength	Percent of Design	Type of Fracture
602	1/28/2013	7	52800	4.00	12.57	4200		1
603	2/18/2013	28	74740	4.00	12.57	5950	149%	1
604	2/18/2013	28	74390	4.00	12.57	5920	148%	1
605		0		4.00	12.57			

Remarks:

Copies to:

Reported by:
Kent Seegmiller
Concrete Laboratory Manager

NORTECH Geotechnical/Civil Consultants, Ltd.

FIELD CONSTRUCTION INSPECTION REPORT

PROJECT PSC Environmental JOB NO. 14441-28C

LOCATION 2095 Newlands Drive, Fernley, Nevada REPORT NO. 4

CONTRACTOR L & H Concrete WEEK ENDING 02-16-13

Work Description

February 11 - On site for epoxy inspection on anchor bolts for base plates (support tanks) for pad T5 and 307. Anchor bolts (1") and epoxy were placed in accordance with structural engineered drawings. Holes were drilled to proper embed depth of 9" and cleaned out thoroughly. (MSV)

PROCESS PIPING INSPECTION FORM

Philip Services Corporation / 21 EMI
PSC Fernley Facility
2095 Newlands Drive East
Fernley, NV 89408
(775)575-2760

Tank Number: 307

Date Inspected: April 3, 2013

Fill Line Assembly:

Number of Fill Line Assemblies: 1 Fill Line Assembly

Description: A bulkhead fitting at the top of the tank is the only permanent piping in the fill line assembly. A temporary fill line is attached to the bulkhead fitting. There was no damage to the process pipe connection or to the tank shell. No evidence of leaking found. The permanent piping is secured and stable.

Discharge Line Assembly:

Number of Discharge Line Assemblies: 2 Discharge Line Assemblies

Description: The bulkhead fitting to the threaded valve connection is the only permanent piping in the discharge line assembly. A temporary discharge line is attached to the valve connection. There was no damage to the process piping connection or to the tank shell. No evidence of leaking found. The permanent piping is secured and stable.

INSPECTOR: Brian Wier DATE: April 3, 2013

030913

AlltanksCom LLC
PO 680474 - Houston, Texas 77268
281.825.4000 – 281.825.4099
gene@alltanks.com

Terrence Tobey,

648 Lander Street Reno,

Nv 89509

Based on the following information, I certify that the tank design and tanks made of virgin linear polyethylene as manufactured by Snyder Industries are suitable for the storage of chemistry as indicated below, in the waste processing stream of the PSC Facility in Fernley NV.

My research indicates that relative to the structural suitability and chemical compatibility of the 100% linear polyethylene tanks, Tank No# 301-307, as fabricated by Snyder, these tanks are approved for long time storage of the below solutions at temperatures up to 150°F.

Alkaline – pH 8-14:

Acids typically less than 20% - pH – 0-6:

Neutral solutions - pH 4-10:

Bleach solutions - pH 11-12:

I have reviewed Snyder Company's product information provided on tank design and compatibility with the information submitted by PSC.

Thanks

Gene Vincent, President

AlltanksCom LLC

JAIK CHOI & ASSOCIATES
Structural Engineering
1215 PORTSIDE WAY
CCORONA DEL MAR, CA 92625
(949) 706-7789 Fax (424) 239-2666
email:jcse@msn.com

Structural Calculations for

Seismic Restraint System for
Ground Supported Storage Tanks (6500 gal Flat, 12500 gal Flat & 7400 gal Cone w/ S.G.=1.4)
Located at PSC Fernley, 2095 Newlands Drive, E, Fernley, NV 89408

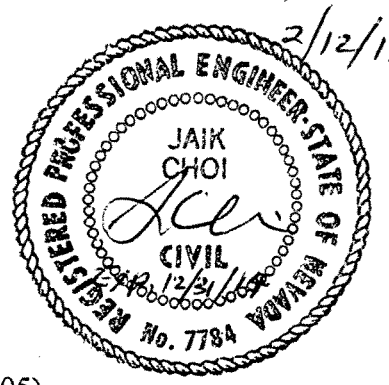

2/12/13

Prepared for

AlltanksCom LLC
Equipment Pro Inc.

Design Criterion

1. Codes ; International Building Code 2006 Edition.
; California Building Code 2007 Edition. (ASCE 7.05)
; AISC 13th Edition.
2. Steel : ASTM A-36 for angles & plates.
3. Cable ; 7x19 Galv. Steel or Type 304 or 316 S.S.
4. Bolts ; Hilti HAS-E Rod Standard or equal
5. Epoxy Adhesive ; Hilti HIT-RE500SD
6. Concrete ; f'c = 4,000 psi @ 28 days for footings.
7. Reinforcing ; ASTM A615-60
8. Soil ; Assumed minimum allowable bearing value = 1,500 psf @ 12" depth

Index

	Page
1. 6500 gal. and 12500 gal. Flat Bottom Tanks	4-10
2. 7400 gal. Cone Bottom Tank	11-16

Appendix

1. Tank Data and Calculations for Anchorage types
2. Calculations for Capacity of Connectors
3. Anchor Bolts ICBO Report (ESR-2322)

SHT. # 2
J.N. 12-932A
DATE 12/20/12
BY: J.C.

Project Name = All tanks-Equip. Pro-Fernley, NV
Date = Thu Dec 20 08:55:53 PST 2012

Conterminous 48 States
2003 NEHRP Seismic Design Provisions
Zip Code = 89408
Spectral Response Accelerations Ss and S1
Ss and S1 = Mapped Spectral Acceleration Values
Data are based on a 0.01 deg grid spacing

Period (sec)	Centroid Sa (g)	
0.2	1.335	(Ss)
1.0	0.531	(S1)

Period (sec)	Maximum Sa (g)	
0.2	1.509	(Ss)
1.0	0.615	(S1)

Period (sec)	Minimum Sa (g)	
0.2	0.803	(Ss)
1.0	0.298	(S1)

Conterminous 48 States
2003 NEHRP Seismic Design Provisions
Zip Code = 89408
Spectral Response Accelerations SMs and SM1
SMs = Fa x Ss and SM1 = Fv x S1
Site Class D

Period (sec)	Centroid Sa (g)	
0.2	1.335	(SMs, Fa = 1.000)
1.0	0.796	(SM1, Fv = 1.500)

Period (sec)	Maximum Sa (g)	
0.2	1.509	(SMs, Fa = 1.000)

SHT. # 3
J.N. 12-932 A
DATE 12/20/12
BY J.C.

Period (sec)	Minimum Sa (g)	
0.2	0.947	(SMs, Fa = 1.179)
1.0	0.538	(SM1, Fv = 1.803)

Conterminous 48 States
2003 NEHRP Seismic Design Provisions
Zip Code = 89408
Spectral Response Accelerations SDs and SD1
SDs = 2/3 x SMs and SD1 = 2/3 x SM1
Site Class D

Period (sec)	Centroid Sa (g)	
0.2	0.890	(SDs)
1.0	0.531	(SD1)

Period (sec)	Maximum Sa (g)	
0.2	1.006	(SDs)
1.0	0.615	(SD1)

Period (sec)	Minimum Sa (g)	
0.2	0.631	(SDs)

1.0 0.922 (SM1, Fv = 1.500)

Jaik Choi Associates
Structural Engineering
(949)706-7789, Fax;(424)239-2666
email;jcse@msn.com

Snyder Industries

Lincoln, NE

SII Vertical Ground Supported Tanks (flat bottom)

A) Design Lateral Loads Calculations

Per 2006 IBC/2007 CBC Code (ASCE 7-05 Sect 15.7.6)

1) Seismic loads — **Seismic Design Category "D"**

Design Seismic Coeff. Zip Code **89408** (Fernley, NV)

Site Class	D	Table 1613.5.2
Input Fa	1.00	Table 1613.5.3(1)
Input Fv	1.50	Table 1613.5.3(2)
Input Ss	**1.34**	Figure 1613.5(1)
Input S1	**0.53**	Figure 1613.5(2)
Input I	1.5	ASCE 7-Table 11.5-1
Input R	3.0	ASCE 7-Table 15.4-1

Hc; Height of tank content
Hr;Height of tank roof
Ht; Height of tank top
Dt; Diameter of tank
We; Empty Weight of tank
Wc; Content Weight in tank
Wt; Total Weight of tank
SG; Specific Gravity
Pw; Wind Load

Critical Tank Data (Part # 5350) **12500** gals.

Max. Hr	15.45 ft.
Max. D	11.83 ft.
We	3100 lbs
Wc	104175 lbs
S.G.	**1.4**

3.68H/D = 4.81 Tanh(3.68H/D)= **1.00** manually
Tc=2*phi*(D/3.68g*tanh(3.68H/D))^2 = 1.98 sec.
Sms =Fa*Ss = 1.335
Sm1 =Fv*S1 = 0.797
Sds =2*Sms/3= 0.890 = Sai Sloshing portion **25** %
Sd1 =2*Sm1/3= 0.531
Ts =Sd1/Sds= 0.60 sec.
Sac=1.5Sd1/Tc= 0.40
Vi =Sai*I*Wi/R= 0.445 Wi Wi = We+0.75*Wc 112484 lbs.
Vc =Sac*I*Wc/1.5= 0.401 Wc Wc = .25*Wc/100 36461 lbs.

Seismic Load = (Vi*Wi+Vc*Wc)/(We+Wc*S.G.) = 0.434 W

Design Load Fp (seis.) = 0.434 W per 2009 IBC/2010 CBC Code governs

2) Wind loads 110 mph

Desgin loads = Wind = Qz =.00256KzKztKdV^2I
Qz = 41.52 psf

Design Wind Coeff.

Input	Kz	1.03	Sect.6.5.6.6 Table 6-3
Input	Kzt	1.37	Sect.6.5.7.2 Figure 6.4
Input	Kd	0.95	Sect.6.5.4.4 Table 6-4
Input	I	1.00	ASCE 7-Table 11.5-1

Pw = Qz*Tank Dia.*Ht
Mot = Pw*Ht/2
Up or Down Ld./conn. = Mot/Dt
Uplift/conn.= Up Ld.- .5*We

B) Tank Data and Anchorage types

See Section "D" (the Calculations for the Capacity of Anchorages at Concrete)

Jaik Choi Associates
Structural Engineering
(949)706-7789, Fax;(424)239-2666
email;jcse@msn.com

Snyder Industries

Lincoln, NE

1) BASE ANCHORAGE

INPUT PARAMETERS — **ANCHORAGE CONN.**

PART NUMBER	TANK SIZE (GAL.)	TANK DIA. (FT.)	Hc (FT.)	Hr (FT.)	Ht (FT.)	We (LBS.)	Wc (LBS.)	Wind Pw (LBS.)	Wind CONN. TYPE	SEIS. (SG=1.4) (LBS.)	SEIS. (SG=1.4) CONN. TYPE
7140--	6500	10.00	11.59	11.85	12.64	1450	54171	5249		77289	4-6D4
5350--	12500	11.83	15.12	15.45	16.45	3100	104175	8081		148945	8-4D4

2) CABLE ANCHORAGE

Safety Factor (S.F.) = 2 / R.F./ A.F. = 2.0

R.F. = 0.75 (Reduction factor due to possible elastic stretch)
A.F. = 1.33 (Adjust factor due to duration of loads)

CABLE SIZE	BREAK STRENGTH	LOOP STRENGTH W/S.F.= 2.0
0.25	6400	6400
0.375	12000	12000
0.5	21600	21600
0.625	33600	33600
0.75	48000	48000

CABLE IS 7 X 19 304 SERIES SS

Mot = Vseis.*Cg
Up or Down Ld./conn. = Mot/Ds
Uplift/conn.= Up Ld.- .5*Wef
Wef = 50% of Wt effect. for holdown

INPUT PARAMETERS — **CABLE CONN.**

PART NUMBER	TANK SIZE (GAL.)	TANK DIA. (FT.)	Hr (FT.)	Wt (LBS.)	No. of Anchor WIND	SG1.5	Sg1.9	WIND UPLIFT (LBS.)	WIND CABLE SIZE	SEIS. (SG=1.4) (LBS.)	SEIS. (SG=1.4) CONN. TYPE
7140--	6500	10.00	11.85	55621	4	4	4	2592	1/4"	-20858	none
5350--	12500	11.83	15.45	107275	4	4	4	4068	1/4"	-40228	none

Jaik Choi Associates
Structural Engineering
(949)706-7789, Fax:(424)239-2666
email; jcse@msn.com

Snyder Industries

Lincoln, NE

C) FOUNDATION DESIGN

SII Vertical Ground Supported Tank (flat bottom)

Desgin loads = Vs = 0.434 W

Design Parameter

Allow. Bearing "Fb"=	1500 psf x 1.33 =	1995 psf
Passive Pressure "Pp"=	250 psf x 1.33 =	332.5 psf
Friction Coeff. = u =	0.3	

Hc; Height of tank content
Ht; Height of tank top
We; Empty Weight of tank
Wc; Content Weight in tank
Wt; Total Weight of tank
Wf; Footing Weight
SG; Specific Gravity
Fd; Footing Diameter
Fe; Footing Edge Distance
Ft; Footing Thickness
Mf; Moment in the footing
Mot; Overturning Moment
Mr; Resisting Moment
F.S.; Factor of Safety for Overturning
SL; Sliding resistance
Fa; Soil bearing value (Direct)
Fb; Soil bearing value (Overturing)
Fs; Soil bearing value (Total)
b; Soil reaction resultant location
Sf; Section Modulus of footing
As; Area of reinforcing steel required

1) Overturning

Mot = Vs*Hc/2
Total Dl.(TD) = W + Wt. Ftg.
Mresist (Mr) = TD*.5*Fw
Factor of Safety "F.S."=Mr/Mot = **> 1.5**

2) Sliding of Foundation

Load = Fp = Vs
Resist = u*Total Dl.+ Passive Pressure
SL > Vs

3) Soil Bearing

Result @ (Mr-Mot)/TD="b"
Fa = (Wt + Wf) / (.785*Fd^2)
Fb = (Wt + Wf)*(.5*Fd-b)/Sf
Fs = (Fa + Fb) psf < 1995 O.K.

Design for Specific gravity (SG) = 1.4

INPUT PARAMETERS **FOUNDATION SIZES**

PART NUMBER	TANK SIZE (GAL.)	TANK DIA. (FT.)	Hc (FT.)	Ht (FT.)	We (LBS.)	Wc (LBS.)	Wt (LBS.)	Fe (FT.)	Fd (FT.)	Ft (FT.)	b (FT.)	Wf (LBS.)
7140--	6500	10.00	11.59	12.64	1450	75839	77289	2.00	14.00	1.00	4.73	23079
5350--	12500	11.83	15.12	16.45	3100	145845	148945	2.75	17.33	1.50	5.76	53046

RESULTS **SOIL BEARING & FOOTING REINFORCING**

PART NUMBER	Vs (LBS.)	SL (LBS.) > Vs	Mot (ft-k)	Mr (ft-k)	F.S. > 1.5	Fa psf	Fb psf	Fs psf	Mf ft.-k	As in2	Reinf. Size	in. o.c.
7140--	33569	31155	228.1	703	3.08	652	847	1499	2.84	0.14	# 4 @	17
5350--	64691	64541	586.1	1750	2.99	857	1147	2004	7.12	0.20	# 4 @	12

Jaik Choi Associates
Structural Engineering
(949)706-7789, Fax:(424)239-2666
email; jcse@msn.com

Snyder Industries

Lincoln, NE

Sheet No. 6A of
Job No. 12-932A
Date; 12/20/12
By; J. Choi

For Part #7140, use 14'-0" dia. x 6" thick house-keeping conc. (4,000) pad on top of existing 6" slab Reinf. w/ #4 @ 12" each way at center-Use Sikadur32 bonding agent between existing and new

For Part #5350, use 17'-4" dia. x 12" thick house-keeping conc. (4,000) pad on top of existing 6" slab Reinf. w/ #4 @ 12" ea. way at 3" from the top-Use Sikadur32 bond'g agent between existing and new

Jaik Choi Associates
Structural Engineering
(949)706-7789, Fax;(424)239-2666
email; jcse@msn.com

Snyder Industries

Lincoln, NE

D) Structural Calculations for the Capacity of Anchorage at Concrete

Seismic V= 0.434 W

1) Unity for Comb. Loading (Shear + Tension)

Bolts= ASTM A 36

Shear/bolt = V/Nb
Tension/bolt = Moment/anc. Spacing = V*Hp/2/Sa
Unity = 1.33 = V/Nb/S + .5*V*Hp/Sa/T/Nb
V = 1.33*Nb*T*S/ (T + .5*S*Hp/Sa) for 1 or 2 bolts
V = 1.33*Nb*T*S/ (T + S*Hp/Sa) for 4 bolts

T= Tension capacity of bolt
S= Shear capacity of bolt
Sa= Anc. spacing or .8*(bolt dist. from edge)
Sb= Anc. spacing btwn stiffners
Hp= Height of back plate
Nb= Number of bolts per conn.

2) Load reduction factors due to anchor bolt spacing

=.7 + .3*(Sa - .5Ed)/Ed

				Bolt Spacing (inches)				
Bolt Size	Ed (Embed.)	1.5 Ed	.5Ed	5	6.5	8	6.5+8	6.5+6.5+8
1/2"	6	9.00	3.00	0.800	0.875	0.950	0.831	0.727
5/8"	7.5	11.25	3.75	0.750	0.810	0.870	0.705	0.571
3/4"	6.75	10.13	3.38	0.772	0.839	0.906	0.760	0.637
1"	9	13.50	4.50	0.717	0.767	0.817	0.626	0.480
1" L	12	18.00	6.00	0.675	0.713	0.750	0.534	0.381

3) Allowable tension and shear values in normal wt. Concrete (ICC #ESR2322))

ASTM A36	2,000 psi conc.				4,000 psi conc.			
	Tension		Shear		Tension		Shear	
Bolt Size	Concrete	Steel	Concrete	Steel	Concrete	Steel	Concrete	Steel
1/2"	4775	3755	6080	1935	5380	3755	8600	1935
5/8"	7320	5870	9505	3025	7515	5870	13440	3025
3/4"	8670	8455	8390	4355	10755	8455	11865	4355
1"	13845	15030	14915	7745	17365	15030	21095	7745
1" L	17935	15030	24325	7745	17935	15030	34405	7745

ASTM A193-B7	2,000 psi conc.				4,000 psi conc.			
	Tension		Shear		Tension		Shear	
Bolt Size	Concrete	Steel	Concrete	Steel	Concrete	Steel	Concrete	Steel
1/2"	4775	8100	6080	4170	5380	8100	8600	4170
5/8"	7320	12655	9505	6520	7515	12655	13440	6520
3/4"	8670	18225	8390	9390	10755	18225	11865	9390
1"	13845	32400	14915	16690	17365	32400	21095	16690
1" L	17935	32400	24325	16690	17935	32400	34405	16690

ASTM 304SS	2,000 psi conc.				4,000 psi conc.			
	Tension		Shear		Tension		Shear	
Bolt Size	Concrete	Steel	Concrete	Steel	Concrete	Steel	Concrete	Steel
1/2"	4775	6480	6080	3335	5380	6480	8600	3335
5/8"	7320	10125	9505	5215	7515	10125	13440	5215
3/4"	8670	12390	8390	6385	10755	12390	11865	6385
1"	13845	22030	14915	11350	17365	22030	21095	11350
1" L	17935	22030	24325	11350	17935	22030	34405	11350

4) Stiffness Plate thickness based on allowable bearing & shear stresses

Allowable bearing stress =Fbrg = 1.2 * Fu = 1.2*58*1.33 = 92.57 ksi

Jaik Choi Associates
Structural Engineering
(949)706-7789, Fax;(424)239-2666
email; jcse@msn.com

Snyder Industries

Lincoln, NE

Allowable shearing stress = Fv = 0.4 * Fy = 0.4*36*1.33 = 19.15 ksi
Edge distance of bolt= 1.75 inches Effect. For shear = 1.75"-1.25"/2 = 1.125 inches

1/4" Plate thick.		
Cable Size	Allow.shear	Allow. Brg.
0.25	10.77	5.79
0.375	10.77	8.68
0.5	10.77	11.57
0.625	10.77	14.46

3/8" Plate thick.		
Cable Size	Allow.shear	Allow. Brg.
0.25	16.16	8.68
0.375	16.16	13.02
0.5	16.16	17.36
0.625	16.16	21.70

5) Maximum plate thickness based on allow. conc. bearing stresses

Allowable concrete bearing stress = .6*fc'*1.33 =

	f'c=	2,000	4,000 psi
	Fc=	1600	3200 psi

Conn. Type	2 bolts	4 bolts	6 bolts	Fc (psi)
Max. pl. thk.	0.667	0.514	0.408	for 1600
Max. pl. thk.	0.943	0.727	0.578	for 3200

Base plate length to calculate plate thickness (Pl. thk.)

Conn. Type	2 bolts	4 bolts	6 bolts	
Angle length ("L")	8	10	16	inches
Min. edge dist.	6	8	8	inches

6) Allowable total tank weight (Wt) =Max. Vs/ **0.434**

For f'c = 2,000 psi Concrete

Conn. Type	# of Anchors	Sa	Hp	Tension (lbs)	Shear (lbs)	Max. Vs (kips)	Tank Wt. (kips)	Pl. thk. (inch)
4-2A	(4) 2- 1/2" dia.	3	3.5	3755	1935	3.96	9.11	0.267
4-2B	(4) 2- 5/8" dia.	3	3.5	5490	3025	6.09	14.02	0.331
4-2C	(4) 2- 3/4" dia.	3	3.5	6695	4355	8.40	19.34	0.389
4-2D	(4) 2- 1" dia.	3	3.5	9922	7745	14.16	32.59	0.505
4-4A	(4) 4- 1/2" dia.	8	4	3755	1935	8.19	18.85	0.106
4-4B	(4) 4- 5/8" dia.	8	4	5158	3025	12.44	28.65	0.131
4-4C	(4) 4- 3/4" dia.	8	6	6586	4355	15.49	35.66	0.179
4-4D	(4) 4- 1" dia.	8	6	8669	7745	24.67	56.80	0.226
4-6A	(4) 6- 1/2" dia.	8	4	3473	1935	12.08	27.81	0.165
4-6B	(4) 6- 5/8" dia.	8	4	4178	3025	17.72	40.81	0.199
4-6C	(4) 6- 3/4" dia.	8	6	5525	4355	21.84	50.29	0.271
4-6D	(4) 6- 1" dia.	8	6	6646	7745	32.98	75.93	0.333
8-4A	(8) 4- 1/2" dia.	8	4	3755	1935	19.76	45.49	0.106
8-4B	(8) 4- 5/8" dia.	8	4	5158	3025	30.04	69.17	0.131
8-4C	(8) 4- 3/4" dia.	8	6	6586	4355	37.39	86.08	0.179
8-4D	(8) 4- 1" dia.	8	6	8669	7745	59.56	137.12	0.226
8-6B	(8) 6- 5/8" dia.	8	4	4178	3025	42.79	98.51	0.199
8-6C	(8) 6- 3/4" dia.	8	6	5525	4355	52.72	121.39	0.271
8-6D	(8) 6- 1" dia.	8	6	6646	7745	79.61	183.30	0.333
8-6E	(8) 6- 1" L.dia.	8	6	6829	7745	80.62	185.62	0.335

For f'c = 4,000 psi Concrete

Conn. Type	# of Anchors	Sa	Hp	Tension	Shear	Max. Vs	Tank Wt.	Pl. thk.

Jaik Choi Associates
Structural Engineering
(949)706-7789, Fax;(424)239-2666
email; jcse@msn.com

Snyder Industries

Lincoln, NE

				(lbs)	(lbs)	(kips)	(kips)	(inch)
4-2A4	(4) 2- 1/2" dia.	3	3.5	3755	1935	3.96	9.11	0.267
4-2B4	(4) 2- 5/8" dia.	3	3.5	5870	3025	6.19	14.24	0.334
4-2C4	(4) 2- 3/4" dia.	3	3.5	8455	4355	8.91	20.51	0.401
4-2D4	(4) 2- 1" dia.	3	3.5	12445	7745	15.11	34.80	0.522
4-4A4	(4) 4- 1/2" dia.	8	4	3755	1935	8.19	18.85	0.106
4-4B4	(4) 4- 5/8" dia.	8	4	5870	3025	12.80	29.46	0.133
4-4C4	(4) 4- 3/4" dia.	8	6	8455	4355	16.71	38.48	0.186
4-4D4	(4) 4- 1" dia.	8	6	10872	7745	26.86	61.83	0.235
4-6A4	(4) 6- 1/2" dia.	8	4	3755	1935	12.28	28.27	0.166
4-6B4	(4) 6- 5/8" dia.	8	4	5870	3025	19.19	44.19	0.207
4-6C4	(4) 6- 3/4" dia.	8	6	8455	4355	25.07	57.72	0.187
4-6D4	(4) 6- 1" dia.	8	6	10872	7745	40.28	92.75	0.368
4-6E4	(4) 6- 1" L.dia.	8	6	9584	7745	38.48	88.60	0.360
8-4A4	(8) 4- 1/2" dia.	8	4	3755	1935	19.76	45.49	0.106
8-4B4	(8) 4- 5/8" dia.	8	4	5870	3025	30.89	71.12	0.133
8-4C4	(8) 4- 3/4" dia.	8	6	8455	4355	40.34	92.89	0.186
8-4D4	(8) 4- 1" dia.	8	6	10872	7745	64.83	149.26	0.235
8-6A4	(8) 6- 1/2" dia.	8	4	3755	1935	29.64	68.24	0.166
8-6B4	(8) 6- 5/8" dia.	8	4	5870	3025	46.33	106.68	0.207
8-6C4	(8) 6- 3/4" dia.	8	6	8455	4355	60.52	139.33	0.290
8-6D4	(8) 6- 1" dia.	8	6	10872	7745	97.24	223.89	0.368
8-6E4	(8) 6- 1" L.dia.	8	6	9584	7745	92.90	213.88	0.360

ASTM A 193- Grade B7 (4,000 psi)

Conn. Type	# of Anchors	Sa	Hp	Tension (lbs)	Shear (lbs)	Max. Vs (kips)	Tank Wt. (kips)	Pl. thk. (inch)
4-6D4(B7)	(4) 6- 1" dia.	8	6	10872	13208	55.15	126.98	0.431
4-6E4(B7)	(4) 6- 1" L.dia.	8	6	9584	13099	51.62	118.85	0.417
8-4A4(B7)	(8) 4- 1/2" dia.	8	4	5380	4170	38.60	89.34	0.148
8-4B4(B7)	(8) 4- 5/8" dia.	8	4	5296	6520	51.83	119.97	0.172
8-4C4(B7)	(8) 4- 3/4" dia.	8	6	8170	9390	64.76	149.92	0.235
8-4D4(B7)	(8) 4- 1" dia.	8	6	10872	13208	88.76	205.45	0.275
8-6A4(B7)	(8) 6- 1/2" dia.	6	4	5380	4170	52.96	122.60	0.342
8-6B4(B7)	(8) 6- 5/8" dia.	8	4	5296	6520	77.74	179.96	0.269
8-6D4(B7)	(8) 6- 1" dia.	8	6	10872	9023	107.13	248.00	0.386
8-6E4(B7)	(8) 6- 1"L.dia.	8	6	9584	13099	124.61	288.44	0.417

AISI 304 SS- Condition CW (4,000 psi)

Conn. Type	# of Anchors	Sa	Hp	Tension (lbs)	Shear (lbs)	Max. Vs (kips)	Tank Wt. (kips)	Pl. thk. (inch)
8-4A4(SS)	(8) 4- 1/2" dia.	8	4	5380	3335	32.70	75.68	0.136
8-4B4(SS)	(8) 4- 5/8" dia.	8	4	5296	5215	44.88	103.88	0.160
8-4C4(SS)	(8) 4- 3/4" dia.	8	6	8170	6385	51.70	119.67	0.210
8-4D4(SS)	(8) 4- 1" dia.	8	6	10872	13208	88.76	205.45	0.275
8-6A4(SS)	(8) 6- 1/2" dia.	8	4	5380	3335	49.04	113.53	0.213
8-6B4(SS)	(8) 6- 5/8" dia.	8	4	5296	5215	67.32	155.82	0.250

Jaik Choi Associates
Structural Engineering
(949)706-7789, Fax;(424)239-2666
email; jcse@msn.com

Snyder Industries

Lincoln, NE

8-6C4(SS)	(8) 6- 3/4" dia.	8	6	8170	6385	77.55	179.51	0.329
8-6D4(SS)	(8) 6- 1" dia.	8	6	10872	10126	114.84	265.84	0.400
8-6E4(SS)	(8) 6- 1" L.dia.	8	6	9584	13099	124.61	288.44	0.417

Jaik Choi Associates
Structural Engineering
(949)706-7789, Fax;(424)239-2666
email;jcse@msn.com

Snyder

Lincoln, NE

Vertical Ground Supported Tanks (Cone bottom)

A) Design Lateral Loads Calculations

Per 2006 IBC/2007 CBC Code

1) Seismic loads **Seismic Design Category "D"**

Design Seismic Coeff. Zip Code **89408** (Fernley, NV)

Site Class	D	Table 1613.5.2
Input Fa	1.00	Table 1613.5.3(1)
Input Fv	1.50	Table 1613.5.3(2)
Input Ss	**1.335**	2003 NEHRP (USGS Web)
Input S1	**0.531**	2003 NEHRP (USGS Web)
Input I	1.5	ASCE 7-Table 11.5-1
Input R	3.0	ASCE 7-Table 15.4-1

Hcb; Height of Cone Bottom
Hct; Height of Cone Top
Ht; Height of tank top
Hcg; Height of center of gravity
Dt; Diameter of tank
We; Empty Weight of tank
Wc; Content Weight in tank
Wt; Total Weight of tank
SG; Specific Gravity
Pw; Wind Load

Critical Tank Data (Part #5320000N) 7400 gals.

Max. Hr	14.79 ft.
Max. D	11.83 ft.
We	1200 lbs
Wc	61672 lbs
S.G.	**1.4**

3.68H/D = 4.60 Tanh(3.68H/D)= **1.00** **manually**
Tc=2*phi*(D/3.68g*tanh(3.68H/D))^2 = 1.98 sec.

Sms =Fa*Ss =	1.335				
Sm1 =Fv*S1 =	0.797				
Sds =2*Sms/3=	0.890	= Sai	Sloshing	**25** %	
Sd1 =2*Sm1/3=	0.531				
Ts =Sd1/Sds=	0.60	sec.			
Sac=1.5Sd1/Tc=	0.40				
Vi =Sai*I*Wi/R=	0.445	Wi	Wi = We+0.75*Wc	65955	lbs.
Vc =Sac*I*Wc/1.5=	0.401	Wc	Wc = .25*Wc/100	21585	lbs.

Seismic Load = (Vi*Wi+Vc*Wc)/(We+Wc*S.G.) = 0.434 W

Design Load Fp (seis.) = 0.434 W per 2009 IBC/2010 CBC Code governs

2) Wind loads 110 mph

Desgin loads = Wind = Qz =.00256KzKztKdV^2I
Qz = 31.27 psf

Design Wind Coeff.

Input	Kz	0.85	Sect.6.5.6.6 Table 6-3
Input	Kzt	1.00	Sect.6.5.7.2 Figure 6.4
Input	Kd	0.95	Sect.6.5.4.4 Table 6-4
Input	I	1.25	ASCE 7-Table 11.5-1

Pw = Ww*Tank Dia.*Ht
Mot = Pw*Ht/2
Up or Down Ld./conn. = Mot/Dt
Uplift/conn.= Up Ld.- .5*We

B) Tank Data and Anchorage types

See Section "D" (the Calculations for the Capacity of Anchorages at Concrete)

Jaik Choi Associates
Structural Engineering
(949)706-7789, Fax;(424)239-2666
email;jcse@msn.com

Snyder

Lincoln, NE

1) BASE ANCHORAGE

INPUT PARAMETERS

ANCHORAGE CONN.

PART NUMBER	TANK SIZE (GAL.)	TANK DIA. (FT.)	Hcb (FT.)	Hct (FT.)	Ht (FT.)	We (LBS.)	Wc (LBS.)	Wind Pw (LBS.)	Wind CONN. TYPE	SEIS. (SG=1.4) (LBS.)	SEIS. CONN. TYPE
5320000N	7400	11.83	2.00	5.25	13.36	1200	86340	4942		38014	8-3/4" dia.

8 -3/4" dia. Hilti HVA good for 8*4,355*1.33 = 46,337 # > 38014 O.K.

2) CABLE ANCHORAGE

Safety Factor (S.F.) = 2 / R.F./ A.F. = 2.0

R.F. = 0.75 (Reduction factor due to possible elastic stretch)
A.F. = 1.33 (Adjust factor due to duration of loads)

CABLE SIZE	BREAK STRENGTH	LOOP STRENGTH W/S.F.= 2.0
0.25	6400	6400
0.375	12000	12000
0.5	21600	21600
0.625	33600	33600
0.75	48000	48000

CABLE IS 7 X 19 304 SERIES SS

Mot = Vseis.*Cg
Up or Down Ld./conn. = Mot/Ds
Uplift/conn.= Up Ld.- .5*Wef
Wef = 50% of Wt effect. for holdown

INPUT PARAMETERS

CABLE CONN.

PART NUMBER	TANK SIZE (GAL.)	TANK DIA. (FT.)	Hcg (FT.)	Wt (LBS.)	No. of Anchor WIND	SG1.2	Sg1.4	WIND UPLIFT (LBS.)	WIND CABLE SIZE	SEIS. (SG=1.4) (LBS.)	SEIS. CONN. TYPE
5320000N	7400	11.83	9.06	87540	4	4	4	-600	none	-26045	none

No Uplift

Jaik Choi Associates
Structural Engineering
(949)706-7789, Fax:(424)239-2666
email; jcse@msn.com

Snyder

Lincoln, NE

Structural Calculations for the footing supporting tank

C) FOUNDATION DESIGN

Vertical Ground Supported Tank (Cone bottom)

Desgin loads = Vs = 0.434 W

Design Parameter

Allow. Bearing "Fb"=	1500 psf x 1.33 =	1995 psf
Passive Pressure "Pp"=	250 psf x 1.33 =	332.5 psf
Friction Coeff. = u =	0.4	

Hc; Height of tank content
Ht; Height of tank top
We; Empty Weight of tank
Wc; Content Weight in tank
Wt; Total Weight of tank
Wf; Footing Weight
SG; Specific Gravity
Fd; Footing Diameter
Fe; Footing Edge Distance
Ft; Footing Thickness
Mf; Moment in the footing
Mot; Overturning Moment
Mr; Resisting Moment
F.S.; Factor of Safety for Overturning
SL; Sliding resistance
Fa; Soil bearing value (Direct)
Fb; Soil bearing value (Overturing)
Fs; Soil bearing value (Total)
b; Soil reaction resultant location
Sf; Section Modulus of footing
As; Area of reinforcing steel required

1) Overturning

Mot = Vs*Hc/2
Total Dl.(TD) = W + Wt. Ftg.
Mresist (Mr) = TD*.5*Fw
Factor of Safety "F.S."=Mr/Mot = **> 1.5**

2) Sliding of Foundation

Load = Fp = Vs
Resist = u*Total Dl.+ Passive Pressure
SL > Vs

3) Soil Bearing

Result @ (Mr-Mot)/TD="b"
Fa = (Wt + Wf) / (.785*Fd^2)
Fb = (Wt + Wf)*(.5*Fd-b)/Sf
Fs = (Fa + Fb) psf < 1995 O.K.

Design for Specific gravity (SG) = 1.4

Footing width = 14.50 ft.
Saddle dist. = 8.30 ft.

INPUT PARAMETERS / **FOUNDATION SIZES**

PART NUMBER	TANK SIZE (GAL.)	TANK DIA. (FT.)	Hcg (FT.)	Ht (FT.)	We (LBS.)	Wc (LBS.)	Wt (LBS.)	Fe (FT.)	Fd (FT.)	Ft (FT.)	b (FT.)	Wf (LBS.)
5320000N	7400	11.83	9.06	13.36	1200	86340	87540	1.33	14.49	1.00	3.84	24723

RESULTS / **SOIL BEARING & FOOTING REINFORCING**

PART NUMBER	Vs (LBS.)	SL (LBS.) > Vs	Mot (ft-k)	Mr (ft-k)	F.S. > 1.5	Fa psf	Fb psf	Fs psf	Mf ft.-k	As in2	Reinf. Size	in. o.c.
5320000N	38014	45987	382.4	813	2.13	681	1280	1962	3.59	0.19	# 4 @	13

Jaik Choi Associates
Structural Engineering
(949)706-7789, Fax:(424)239-2666
email; jcse@msn.com

Snyder

Lincoln, NE

For Part #5320000N, use 14'-6" dia. x 6" thick house-keeping conc. (4,000) pad on top of existing 6" slab Reinf. w/ #4 @ 12" each way at center-Use Sikadur32 bonding agent between existing and new

Jaik Choi Associates
Structural Engineering
(949)706-7789, Fax;(424)239-2666
email; jcse@msn.com

Snyder

Lincoln, NE

D) Structural Calculations for the Capacity of Anchorage at Concrete

Seismic V= 0.434 W

1) Unity for Comb. Loading (Shear + Tension)

Bolts= ASTM A 36

Shear/bolt = V/Nb
Tension/bolt = Moment/anc. Spacing = V*Hp/2/Sa
Unity = 1.33 = V/Nb/S + .5*V*Hp/Sa/T/Nb
V = 1.33*Nb*T*S/ (T + .5*S*Hp/Sa) for 1 or 2 bolts
V = 1.33*Nb*T*S/ (T + S*Hp/Sa) for 4 bolts

T= Tension capacity of bolt
S= Shear capacity of bolt
Sa= Anc. spacing or .8*(bolt dist. from edge)
Sb= Anc. spacing btwn stiffners
Hp= Height of back plate
Nb= Number of bolts per conn.

2) Load reduction factors due to anchor bolt spacing

=.7 + .3*(Sa - .5Ed)/Ed

		Bolt Spacing (inches)						
Bolt Size	Ed (Embed.)	1.5 Ed	.5Ed	5	6.5	8	6.5+8	6.5+6.5+8
1/2"	6	9.00	3.00	0.800	0.875	0.950	0.831	0.727
5/8"	7.5	11.25	3.75	0.750	0.810	0.870	0.705	0.571
3/4"	6.75	10.13	3.38	0.772	0.839	0.906	0.760	0.637
1"	9	13.50	4.50	0.717	0.767	0.817	0.626	0.480
1" L	12	18.00	6.00	0.675	0.713	0.750	0.534	0.381

3) Allowable tension and shear values in normal wt. Concrete (ICC #ESR2322)

ASTM A36	2,000 psi conc.				4,000 psi conc.			
	Tension		Shear		Tension		Shear	
Bolt Size	Concrete	Steel	Concrete	Steel	Concrete	Steel	Concrete	Steel
1/2"	4775	3755	6080	1935	5380	3755	8600	1935
5/8"	7320	5870	9505	3025	7515	5870	13440	3025
3/4"	8670	8455	8390	4355	10755	8455	11865	4355
1"	13845	15030	14915	7745	17365	15030	21095	7745
1" L	17935	15030	24325	7745	17935	15030	34405	7745

ASTM A193-B7	2,000 psi conc.				4,000 psi conc.			
	Tension		Shear		Tension		Shear	
Bolt Size	Concrete	Steel	Concrete	Steel	Concrete	Steel	Concrete	Steel
1/2"	4775	8100	6080	4170	5380	8100	8600	4170
5/8"	7320	12655	9505	6520	7515	12655	13440	6520
3/4"	8670	18225	8390	9390	10755	18225	11865	9390
1"	13845	32400	14915	16690	17365	32400	21095	16690
1" L	17935	32400	24325	16690	17935	32400	34405	16690

ASTM 304SS	2,000 psi conc.				4,000 psi conc.			
	Tension		Shear		Tension		Shear	
Bolt Size	Concrete	Steel	Concrete	Steel	Concrete	Steel	Concrete	Steel
1/2"	4775	6480	6080	3335	5380	6480	8600	3335
5/8"	7320	10125	9505	5215	7515	10125	13440	5215
3/4"	8670	12390	8390	6385	10755	12390	11865	6385
1"	13845	22030	14915	11350	17365	22030	21095	11350
1" L	17935	22030	24325	11350	17935	22030	34405	11350

4) Stiffness Plate thickness based on allowable bearing & shear stresses

Allowable bearing stress =Fbrg = 1.2 * Fu = 1.2*58*1.33 = 92.57 ksi

Jaik Choi Associates
Structural Engineering
(949)706-7789, Fax;(424)239-2666
email; jcse@msn.com

Snyder

Lincoln, NE

Allowable shearing stress = Fv = 0.4 * Fy = 0.4*36*1.33 = 19.15 ksi

Edge distance of bolt= 1.75 inches Effect. For shear = 1.75"-1.25"/2 = 1.125 inches

JAIK CHOI & ASSOCIATES
STRUCTURAL ENGINEERING
23177 LA CADENA DRIVE, #101
LAGUNA HILLS, CALIFORNIA 92653
(949) 951-2522

ALL TANKS

SHEET NO. 17 OF
JOB. NO. 12-932
DATE 1/4/13
BY J.C.

STRUCTURAL CALCULATIONS FOR HOR. SHEAR CONN. BTWN EXIST'G & NEW CONC.

1.

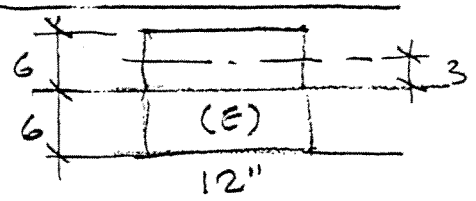

$I = 12 \times 12^3/12 = 1728$

$Q = 12 \times 6 \times 3 = 216$

$\frac{Q}{I} = .125$

2.

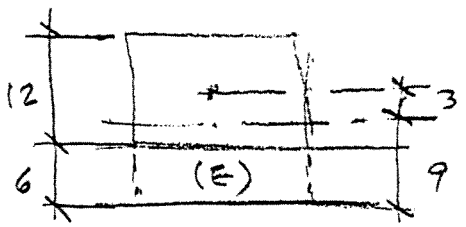

$I = 12 \times 18^3/12 = 5832$

$Q = 12 \times 12 \times 3 = 432$

$\frac{Q}{I} = .074$

3.

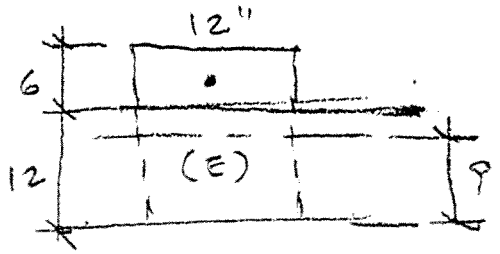

$I = 5832$

$Q = 12 \times 6 \times 6 = 432$

$\frac{Q}{I} = .074$

$\frac{VQ}{I} = .125\,V$

FOOTING DIA. = 17.33'

$A_{FTG.} = \pi \times 17.33^2/4 = 235.76$

$W_t = 148945 + 53046 = 202^K$

UNIF. $W_t = 202/235.76 = .857\ ^K/_{0'}$

LOC. OF ZERO SHEAR = $.857/.116 = 7.4'$

TOTAL $V = 1.143 \times 9.9/2 = 5.66^K$

$\frac{VQ}{I} = .125 \times 5.66 = .707\ K/ft$

USING HILTI HIT RE 500
5/8" Φ W/ 2 3/8" EMBED. (GOOD FOR 5245#)
SPACING REQ'D $5.245/.707 = 7.42'$

USE 1'-0" O/C

CRIT. TANK = 12500 GAL.

$A = \frac{\pi \times 11.83^2}{4} = 110\ ft^2$

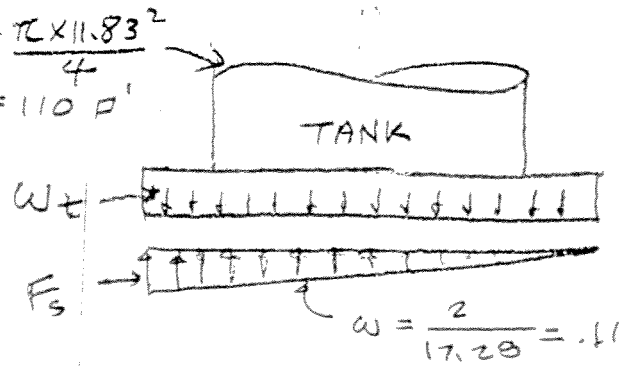

PRESSURE DIAG.

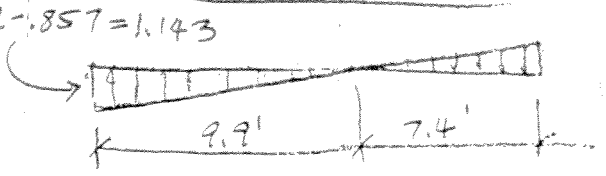

SHEAR DIAG.

HIT-RE 500 Epoxy Adhesive Anchoring System 4.2.7

HIT-RE 500 Allowable and Ultimate Bond/Concrete Capacity for HAS Rods in Normal Weight Concrete[1,2,3,4]

Anchor Diameter in (mm)	Embedment Depth in (mm)	HIT-RE 500 Allowable Bond/Concrete Capacity				HIT-RE 500 Ultimate Bond/Concrete Capacity			
		Tensile		Shear		Tensile		Shear	
		f'_c = 2000 psi (13.8 MPa) lb (kN)	f'_c = 4000 psi (27.6 MPa) lb (kN)	f'_c = 2000 psi (13.8 MPa) lb (kN)	f'_c = 4000 psi (27.6 MPa) lb (kN)	f'_c = 2000 psi (13.8 MPa) lb (kN)	f'_c = 4000 psi (27.6 MPa) lb (kN)	f'_c = 2000 psi (13.8 MPa) lb (kN)	f'_c = 4000 psi (27.6 MPa) lb (kN)
3/8 (9.5)	1-3/4 (44)	645 (2.9)	1095 (4.9)	1510 (6.7)	2135 (9.5)	2580 (11.5)	4370 (19.4)	4530 (20.2)	6405 (28.4)
	3-3/8 (86)	2190 (9.7)	2585 (11.5)	3155 (14.0)	4460 (19.8)	8760 (39.0)	10345 (46.0)	9460 (42.1)	13380 (59.5)
	4-1/2 (114)	2420 (10.8)	2585 (11.5)	4855 (21.6)	6860 (30.5)	9685 (43.1)	10335 (46.0)	14560 (64.8)	20580 (91.5)
1/2 (12.7)	2-1/4 (57)	1130 (5.0)	1965 (8.7)	2510 (11.2)	3550 (15.8)	4530 (20.2)	7860 (35.0)	7525 (33.4)	10640 (47.3)
	4-1/2 (114)	4045 (18.0)	5275 (23.5)	5610 (25.0)	7935 (35.3)	16185 (72.0)	21095 (93.8)	16820 (74.8)	23800 (105.9)
	6 (152)	4775 (21.2)	5380 (23.9)	8635 (38.4)	12210 (54.3)	19095 (84.9)	21520 (95.7)	25900 (115.2)	36620 (162.9)
5/8 (15.9)	2-7/8 (73)	1690 (7.5)	3045 (13.5)	5245 (23.3)	7420 (33.0)	6770 (30.1)	12175 (54.2)	15735 (70.0)	22250 (99.0)
	5-5/8 (143)	6560 (29.2)	7355 (32.7)	8760 (39.0)	12395 (55.1)	26240 (116.7)	29420 (130.9)	26280 (116.9)	37180 (165.4)
	7-1/2 (190)	7320 (32.6)	7515 (33.4)	13615 (60.6)	19080 (84.9)	29290 (130.3)	30060 (133.7)	40840 (180.1)	57240 (254.6)
3/4 (19.1)	3-3/8 (86)	2310 (10.3)	4515 (20.1)	7335 (32.6)	10370 (46.1)	9250 (41.1)	18065 (80.4)	22000 (97.9)	31108 (138.4)
	6-3/4 (172)	8670 (38.6)	10755 (47.8)	12615 (56.1)	17840 (79.4)	34685 (154.3)	43020 (191.4)	37840 (168.3)	53520 (238.1)
	9 (229)	10385 (46.2)	12995 (57.8)	19430 (86.4)	27470 (122.2)	41535 (184.8)	51985 (231.3)	58280 (259.2)	82400 (366.5)
7/8 (22.2)	4 (101)	3005 (13.4)	5665 (25.2)	7795 (34.7)	11020 (49.0)	12030 (53.5)	22670 (100.8)	23375 (104.0)	33050 (147.0)
	7-7/8 (200)	12495 (55.6)	15875 (70.6)	17175 (76.4)	24290 (108.0)	49975 (222.3)	63495 (282.5)	51520 (229.2)	72860 (324.1)
	10-1/2 (267)	14705 (65.4)	16185 (72.0)	26440 (117.6)	37390 (166.3)	58820 (261.7)	64730 (287.9)	79320 (352.8)	112160 (498.9)
1 (25.4)	4-1/2 (114)	3945 (17.5)	8440 (37.5)	10035 (44.6)	14190 (63.1)	15790 (70.2)	33765 (150.2)	30104 (133.9)	42565 (189.4)
	9 (229)	13845 (61.6)	17365 (77.2)	22435 (99.8)	31720 (141.1)	55380 (246.4)	69465 (309.0)	67300 (299.4)	95160 (423.3)
	12 (305)	17935 (79.8)	17935 (79.8)	34535 (153.6)	48830 (217.2)	71740 (319.1)	71740 (319.1)	103600 (460.8)	146480 (651.6)
1-1/4 (31.8)	5-5/8 (143)	5760 (25.6)	12815 (57.0)	14760 (65.7)	20870 (92.8)	23045 (102.5)	51270 (228.1)	44280 (196.9)	62610 (278.5)
	11-1/4 (286)	24610 (109.5)	31620 (140.7)	35050 (155.9)	49570 (220.5)	98430 (437.9)	126480 (562.6)	105140 (467.7)	148710 (661.4)
	15 (381)	34130 (151.8)	35270 (156.9)	53960 (240.0)	76300 (339.4)	136525 (607.3)	141090 (627.6)	161880 (720.1)	228900 (1018.2)

1 Influence factors for spacing and/or edge distance are applied to concrete/bond values above, and then compared to the steel value. The lesser of the values is to be used for the design.

2 Average ultimate concrete shear capacity based on Concrete Capacity Design (CCD) method for standard and deep embedment and based on testing for shallow embedment.

3 All values based on holes drilled with carbide bit and cleaned with brush per manufacturer's instructions. Ultimate tensile concrete/bond loads represent the average values obtained in testing.

4 For underwater applications up to 165 feet/50m depth reduce the tabulated concrete/bond values 30% to account for reduced mechanical properties of saturated concrete.

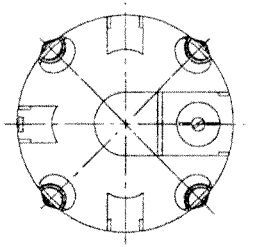

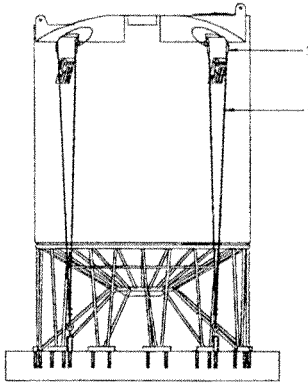

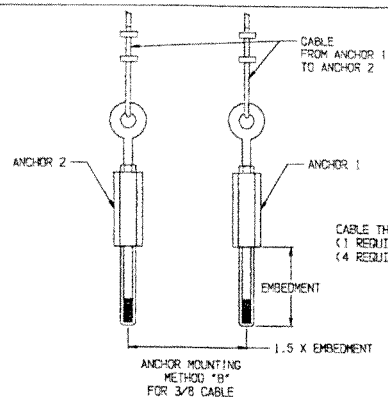

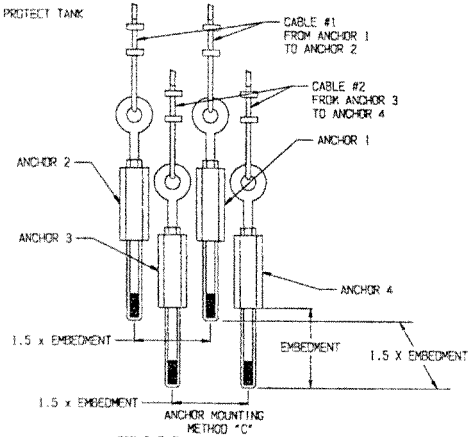

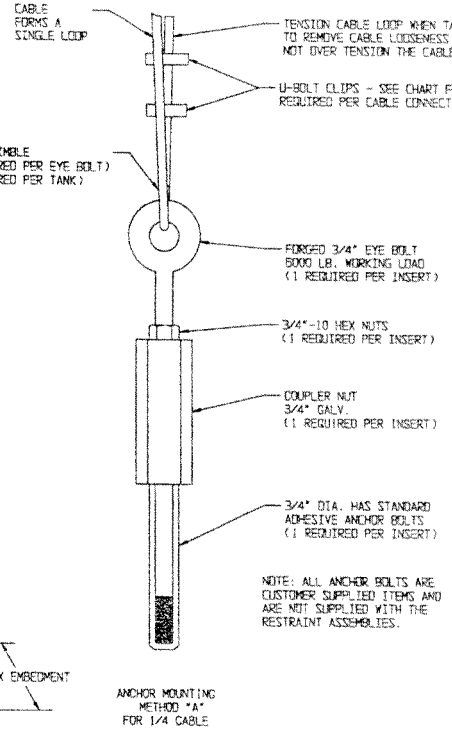

CABLE SIZE (INCHES)	ROPE SIZE (INCHES)	MINIMUM # CLIPS REQD	SPACING OF ROPE BETWEEN CLIPS (INCHES)	*TORQUE IN FT. LBS.
1/4	1/4	3	4-3/4	15
5/16	5/16	3	6-1/2	45
3/8	3/8	3	7-1/2	65
1/2	1/2	4	11-1/2	65
5/8	5/8	5	18	65
3/4	3/4	6	25	130

* USE TORQUE WRENCH WHEN MEANS SHOWN ARE MARKED UPON THE CHANGES BEING CLEAN, DRY, AND FREE OF LUBRICATION.

CODES:
CBC 2007, IBC 2006, API 650, ASCE 7.05, AND AISC 13TH EDITION
SEISMIC DESIGN:
Zip Code = 92701, Site class D - Fa=1.0, Fv=1.5,
Sds = 1.105, Sd1 = 0.597, I = 1.5, R = 3.0
Fp=(Sds X I x W1/R) X 0.7 X 0.8 = 0.31 W
WIND DESIGN:
IBC/CBC - 150 MPH
Qz = 0.00256Kz(Kzt)(Kd)(V^2)I = 58.14 PSF
(Kz = 0.85, Kzt = 1.0, Kd = 0.95, I = 1.25)
GENERAL:
1. ALL CONSTRUCTION MUST MEET LOCAL BUILDING CODE REQUIREMENTS AND BE APPROVED BY THE CONSTRUCTION SITE ENGINEER.
2. THESE GUIDELINES HAVE BEEN PROVIDED TO SPECIFY THE RESTRAINT RECOMMENDATIONS FOR SNYDER INDUSTRY CONE BOTTOM BULK STORAGE TANKS.
CONCRETE MATERIAL:
1. CONCRETE SHALL ATTAIN A MINIMUM ULTIMATE 28 DAY COMPRESSIVE STRENGTH OF Fc=3000 PSI.
CONCRETE REINFORCEMENT:
1. REINFORCING STEEL SHALL CONFORM TO THE REQUIREMENTS OF ASTM A615 GRADE 40 (Fy 40,000 PSI.) AND/OR WELDED WIRE FABRIC PER ASTM A185
2. LAP ALL BARS A MINIMUM OF 40 BAR DIAMETERS. LAP WIRE FABRIC 6" MINIMUM.
3. MINIMUM COVER FOR REINFORCING BARS SHALL BE AS FOLLOWS:
   - 3" FOR CONCRETE DEPOSITED DIRECTLY AGAINST EARTH.
   - 2" FOR CONCRETE DEPOSITED IN FORMS.
4. CONCRETE PAD DESIGN SHOULD BE COMPLETED BY THE CONSTRUCTION SITE ENGINEER BASED ON SPECIFIC APPLICATION.
STRUCTURAL STEEL:
1. ALL STRUCTURAL STEEL COMPONENTS SHALL BE NEW AND OF BASIC OPEN HEARTH PROCESS STEEL CONFORMING TO ALL APPLICABLE REQUIREMENTS OF ASTM A500, A513, ANSI 1020, AND ANSI 1025 (DEPENDS ON STRUCTURAL SHAPE).
2. ALL ARC WELDING ELECTRODES SHALL CONFORM TO ASTM A233 FOR STEEL ARC WELDING ELECTRODES. ELECTRODES SHALL BE AS RECOMENDED BY THE MANUFACTURES FOR THE POSITIONS AND OTHER CONDITIONS OF ACTUAL USE. WELDING SHALL CONFORM TO REQUIREMENTS OF AMERICAN WELDING SOCIETY AWS D1.1.
3. ALL SHARP EDGES AND CORNERS SHALL BE REMOVED ON ALL STRUCTURAL STEEL COMPONENTS.
4. CABLES TO BE 7X19 STRANDED CORE CONSTRUCTION SIZED PER CHART. MATERIAL TO BE SPECIFIED BY CUSTOMER ORDER (MINIMUM BREAKING STRENGTH EQUAL TO OR GREATER THAN 304 SS RATING).
5. ANCHOR BOLTS TO BE HILTI ADHESIVE ANCHORS, MODEL HVA WITH SIZE AND MATERIAL AS SPECIFIED PER SPECIFICATION CHART.
ALL 1/2" DIA. HVA ANCHORS TO HAVE 4-1/4" EMBEDMENT.
ALL 3/4" DIA. HVA ANCHORS TO HAVE 6-5/8" EMBEDMENT.
ALL 1" DIA. HVA ANCHORS TO HAVE 8-1/4" EMBEDMENT.
EMBEDMENT MUST BE PER MANUFACTURER'S RECOMMENDATION.
NO ALLOWANCE HAS BEEN MADE FOR LESS THAN FULL EMBEDMENT.
ALL OTHER FASTENER MATERIALS MUST CORRESPOND TO THE TYPE OF ANCHOR SELECTED.

TANK SIZE (GALLONS)	TANK DIAMETER (INCHES)	1.9 SPECIFIC GRAVITY FLUID STAND REQUIRED	STAND ANCHOR BOLTS REQUIRED	CABLE SIZE	CABLE METHOD	TOTAL # TIE DOWN ANCHOR BOLTS	TOTAL # TIE DOWN CABLES
500	64	78800000	8 EA. 1/2" DIA. HAS STANDARD	1/4	A	4	4
500	86	79000000	8 EA. 1/2" DIA. HAS STANDARD	1/4	A	4	4
1000	64	78800000	8 EA. 1/2" DIA. HAS STANDARD	1/4	A	4	4
1000	86	79000000	8 EA. 1/2" DIA. HAS STANDARD	1/4	A	4	4
1400	86	79000000	8 EA. 1/2" DIA. HAS STANDARD	1/4	A	4	4
1500 1.6 SG	64	78800000	8 EA. 1/2" DIA. HAS STANDARD	1/4	A	4	4
1500 1.9 SG	64	78900100	8 EA. 1/2" DIA. HAS STANDARD	1/4	A	4	4
1650	86	79000000	8 EA. 1/2" DIA. HAS STANDARD	1/4	A	4	4
2000	90	79300000	24 EA. 3/4" DIA. HAS STANDARD	1/4	A	4	4
2500	90	79300000	24 EA. 3/4" DIA. HAS STANDARD	1/4	A	4	4

TANK SIZE (GALLONS)	TANK DIAMETER (INCHES)	1.9 SPECIFIC GRAVITY FLUID STAND REQUIRED	STAND ANCHOR BOLTS REQUIRED	CABLE SIZE	CABLE METHOD	TOTAL # TIE DOWN ANCHOR BOLTS	TOTAL # TIE DOWN CABLES
2500	90	79400000	24 EA. 3/4" DIA. HAS STANDARD	1/4	A	4	4
3000	90	79300000	24 EA. 3/4" DIA. HAS STANDARD	1/4	A	4	4
3900	90	79800000	24 EA. 3/4" DIA. HAS STANDARD	1/4	C	16	8
4100	90	79900000	24 EA. 3/4" DIA. HAS STANDARD	3/8	C	16	8
4400	90	79800000	24 EA. 3/4" DIA. HAS STANDARD	3/8	C	16	8
6000	142	79500000	24 EA. 3/4" DIA. HAS STANDARD	1/4	A	4	4
7400	142	79500000	24 EA. 3/4" DIA. HAS STANDARD	1/4	A	4	4
11500	142	79500100	24 EA. 1" DIA. HAS STANDARD	1/4	A	4	4
13000	142	79500100	24 EA. 1" DIA. HAS STANDARD	3/8	C	16	8

SNYDER INDUSTRIES INC.

LINCOLN, NE 68504

SCALE: NONE	APPROVED BY: D.A.D.	DRAWN BY M. Faben
DATE: 12/07/93		REVISED: 11/20/08

S.I.I. CONE BOTTOM TANK RESTRAINT RECOMMENDATIONS

DRAWING NO. 8-3182C, PAGE 1 OF 1

2/12/13

REGISTERED PROFESSIONAL ENGINEER SEAL OF NEBRASKA No. 7764 JAIK CHOI CIVIL

EXP. 11/31/14

NOTES:

1. REFER TO CALCULATION PACKAGE FOR ADDITIONAL INFORMATION. PAD DIAMETER (Fd) AND PAD THICKNESS (Ft) PER CALCULATION PACKAGE.
2. ALL CONSTRUCTION TECHNIQUES SHALL CONFORM TO ASCE-7.05, IBC 2009.
3. CONCRETE SHALL OBTAIN A MINIMUM ULTIMATE 28 DAY COMPRESSIVE STRENGTH OF Fc = 4000 PSI OR 2000 PSI U.N.O. (SEE CHART BELOW).
4. REINFORCING STEEL SHALL CONFORM TO THE REQUIREMENTS OF ASTM A615 GRADE 60, Fy = 60,000 PSI.
5. MINIMUM COVER FOR REINFORCING BARS SHALL BE 2" ON THE TOP, 3" ON THE SIDES AND BOTTOM OF THE PAD AS SHOWN.
6. PAD IS ASSUMED TO BE PLACED ON A COMPACTED LEVEL SURFACE WITH AN ALLOWABLE SOIL BEARING VALUE OF 1500 PSF. THIS IS THE MAXIMUM ASSUMED SOIL BEARING ALLOWED WITHOUT SITE INSPECTION. IF SITE INSPECTION IS AVAILABLE, PAD DIMENSIONS COULD BE DECREASED. PLEASE CONSULT WITH LOCAL CIVIL ENGINEER FOR REVIEW.
7. ANY PAD SHAPE BUILT (SQUARE OR HEXAGON) THAT WOULD ENCOMPASS THIS ROUND PAD DESIGN AND BUILT USING THE SAME THICKNESS, REINFORCEMENT CRITERIA (ADJUSTED FOR SHAPE AND SIZE), AND DESIGN SPECIFICATIONS WOULD BE CONSIDERED ACCEPTABLE UNDER THESE CALCULATIONS AND CRITERIA.

PART No.	TANK SZ.	TANK Ø	SG	Hc	Ht	Fd	Ft	REBAR SZ.	SPACING O.C.	CONCRETE PSI
7140--	6500	10.00	1.4	11.59	12.64	14.00	1.00	#4	16"	4000
5350--	12500	11.83	1.4	15.12	16.45	17.33	1.50	#4	12"	4000

Hc = HEIGHT OF TANK CONTENTS
Ht = HEIGHT OF TANK TOP
Fd = FOOTING (PAD) DIAMETER
Ft = TOTAL FOOTING (PAD) THICKNESS

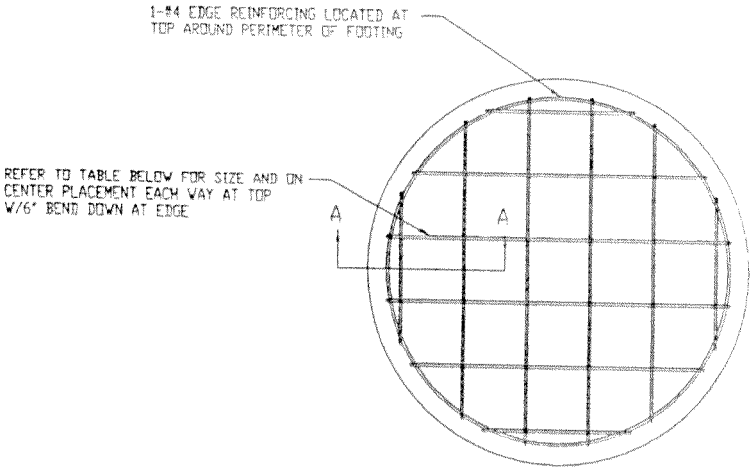

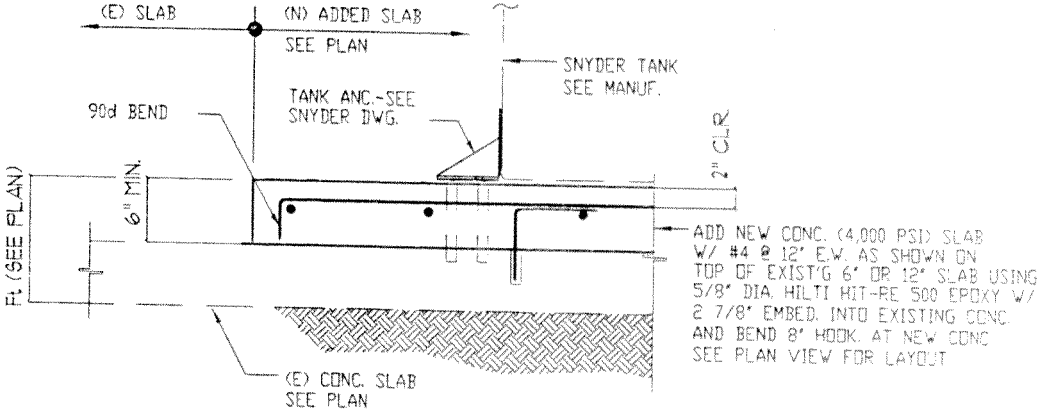

SECTION VIEW A-A

2/12/13

REGISTERED PROFESSIONAL ENGINEER - STATE OF NEBRASKA
JAIK OHOI
CIVIL
EXP. 12/31/13
No. 7793

SNYDER INDUSTRIES INC.
LINCOLN, NE 68504 PHONE:(402) 467-5221 FAX:(402) 467-3247

SCALE: NTS	APPROVED BY:	DRAWN BY: J.D.
DATE: 08/31/04		REVISED

SEISMIC CABLE RESTRAINT SYSTEM 4000 PSI FOUNDATION DESIGN FOR 6,500 & 12,500 GALLON TANKS

TOLERANCES UNLESS OTHERWISE SPECIFIED:
FRACTIONAL: ±1/32"; ANGULAR: ±1°
DECIMAL: .X = ±0.100"; .XX = ±0.060"; .XXX = ±0.003"

DRAWING NUMBER: B-2509

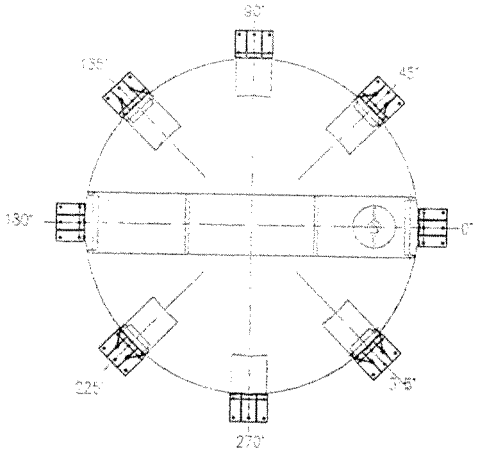

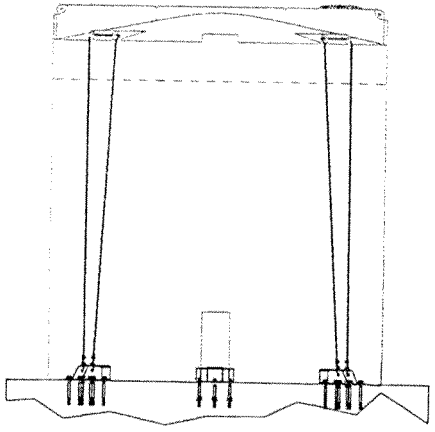

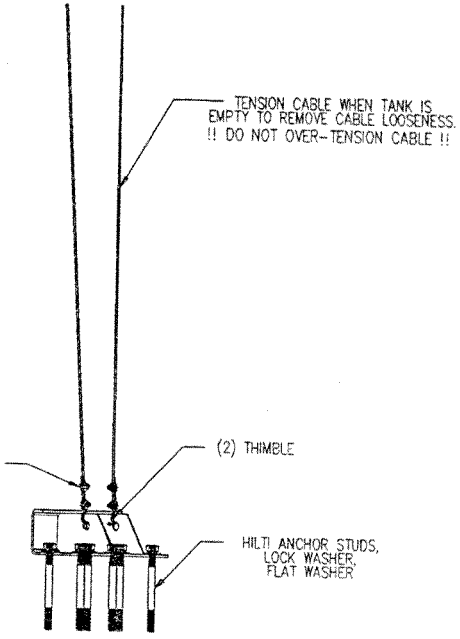

TABLE 1

CLIP SIZE (INCHES)	ROPE SIZE (INCHES)	MINIMUM # CLIPS REQ.	AMOUNT OF ROPE TURN-BACK (INCHES)	*TORQUE IN Ft. Lbs
1/4	1/4	2	4-3/4	15
3/8	3/8	2	6-1/2	45
1/2	1/2	3	11-1/2	65
5/8	5/8	3	12	95

* THE TIGHTENING TORQUE VALUES SHOWN ARE BASED UPON THE THREADS BEING CLEAN, DRY, AND FREE OF LUBRICATION.)

1.4 SPECIFIC GRAVITY

TANK GAL.	TANK DIA.	ANCHOR	QTY.	ANCHOR BOLT	QTY.	EMBEDMENT	CABLE	FOUNDATION
6500	120"	B-2469	4	1" HILTI HAS STD.	24	9"	1/4"	B-2509
12500	142"	B-2467	8	1" HILTI SUPER HAS (ASTM 193A)	32	9"	1/4"	B-2509

REVISIONS

#	DESCRIPTION	DATE	BY
A	PICTORIALLY UPDATE ANCHOR	01/07/13	J.D

CODES:

CODES:
IBC2006
CBC2007
ASCE 7.05
AISC 13th EDITION
ACI 318-02
SEISMIC DESIGN:
IBC SEISMIC DESIGN CATAGORY "D" (GOVERNING CODES)
Fp=(Vi Wi+Vc Wc)/(We+Wc*SG)= .434W
(Ss=1.34, S1 =.53, R=3.0, I=1.5)
WIND DESIGN:
IBC - 110 MPH
Qz=.00256KzKztKdV^2*I=31.27PSF
(Kz=.85, Kzt=1.0, Kd=.95,I=1.25)

GENERAL:
1. ALL CONSTRUCTION SHALL MEET LOCAL BUILDING CODE REQUIREMENTS AND BE APPROVED BY THE BUILDING OFFICIAL.
2. THESE GUIDELINES HAVE BEEN PROVIDED TO SPECIFY THE RESTRAINT RECOMMENDATIONS FOR SNYDER INDUSTRY BULK STORAGE TANKS.

CONCRETE:
1. CONCRETE SHALL HAVE A MINIMUM DESIGN AS PER DRAWING REFERENCED IN SPECIFICATION CHART BELOW..
2. CONCRETE PAD DESIGN SHOULD BE REVIEWED AND APPROVED BY THE BUILDING OFFICIAL BASED ON SPECIFIC APPLICATION AS OTHER DESIGN PARAMETERS ARE POSSIBLE DEPENDING UPON SITE CONDITIONS.

STRUCTURAL STEEL:
1. ALL STRUCTURAL STEEL COMPONENTS SHALL BE NEW AND OF BASIC OPEN HEARTH PROCESS STEEL CONFORMING TO ALL APPLICABLE REQUIREMENTS OF ASTM A36 (STRUCTURAL STEEL FOR BRIDGES AND BUILDINGS - Fy = 36,000 PSI.).
2. ALL ARC WELDING ELECTRODES SHALL CONFORM TO ASTM A233 FOR STEEL ARC WELDING ELECTRODES. ELECTRODES SHALL BE AS RECOMENDED BY THE MANUFACTURES FOR THE POSITIONS AND OTHER CONDITIONS OF ACTUAL USE. WELDING SHALL CONFORM TO REQUIREMENTS OF AMERICAN WELDING SOCIETY AWS D1.1.
3. ALL SHARP EDGES AND CORNERS SHALL BE REMOVED ON ALL STRUCTURAL STEEL COMPONENTS.
4. CABLES TO BE 7X19 STRANDED CORE CONSTUCTION SIZED PER CHART. MATERIAL TO BE SPECIFIED BY CUSTOMER ORDER (MINIMUM BREAKING STRENGTH EQUAL TO OR GREATER THAN 304 SS RATING).
5. ANCHOR BOLTS TO BE HILTI ADHESIVE ANCHORS, MODEL HVA WITH SIZE, MATERIAL, AND EMBEDMENT AS SPECIFIED PER SPECIFICATION CHART BELOW.

ALL OTHER FASTENER MATERIALS MUST CORRESPOND TO THE TYPE OF ANCHOR SELECTED.

2/12/13

REGISTERED PROFESSIONAL ENGINEER - STATE OF NEBRASKA
JAIK CHOI
CIVIL
EXP. 12/31/14

SNYDER INDUSTRIES INC.
LINCOLN, NE 68504 PHONE: (402)467-5221 FAX: (402)465-1210

SCALE: NTS	APPROVED BY:	DRAWN BY: J.D.
DATE: 01/07/13		REVISION: A

S.I.I. TANK SEISMIC RESTRAINT SYSTEM RECOMENDATIONS FOR S.I.I. 6,500 & 12,500 GALLON VERTICAL STORAGE TANKS

TOLERANCES UNLESS SPECIFIED OTHERWISE
ANGULAR: ± 1°
DECIMAL: XXX = ± 1/32"

DRAWING NUMBER
B-2497

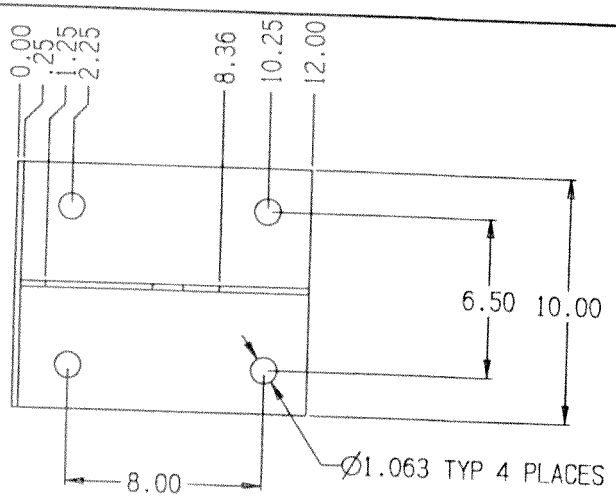

NOTES:
1. MATERIAL ASTM A-36 OR EQUAL. PLATE 1/4" THICK.
2. HOT DIP GALVANIZE THE PART PER ASTM A-123-89. ALTERNATE FINISH TO BE BLACK ENAMEL PAINT FINISH PER SII PAINTING STANDARDS. DATED 7/13/98. HOT DIP GALVANIZED IS THE PREFERRED FINISH.
3. PART SHOWN IS MADE WITH A BENT PLATE. BEND MUST BE PERPENDICULAR TO THE PLATE GRAIN.
4. WELDED FABRICATION CAN BE SUBSTITUTED FOR THE BEND, BUT WELD MUST BE FULL PENETRATION WELD FROM BOTH SIDES AND GROUND SMOOTH ON THE BOTTOM OF THE PLATE.
5. DEBUR ALL EDGES. HEAVILY DEBUR HOLE ON VERTICAL PLATE (A SMALL RADIUS IS PREFERRED).

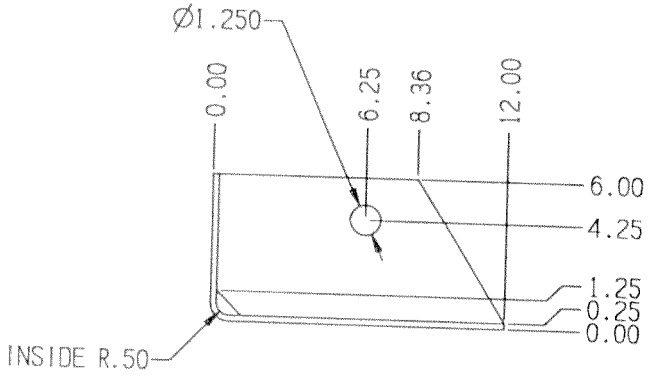

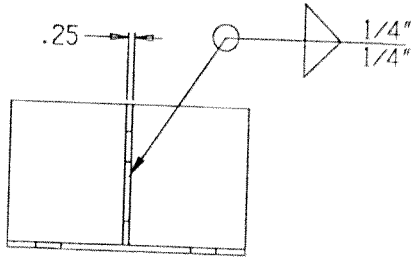

2/12/13

SNYDER INDUSTRIES INC.		
LINCOLN, NE 68504 PHONE:(402) 467-5221 FAX:(402) 467-3247		
SCALE: 1:3	APPROVED BY:	DRAWN BY: D.A.D.
DATE: 5/18/04		REVISED
SEISMIC ANCHOR PLATE - 4 BOLT VERSION		
TOLERANCES UNLESS OTHERWISE SPECIFIED: FRACTIONAL: ±1/32"; ANGULAR: ±1° DECIMAL: .X = ±0.100"; .XX = ±0.030"; .XXX = ±0.010"		DRAWING NUMBER B-2467

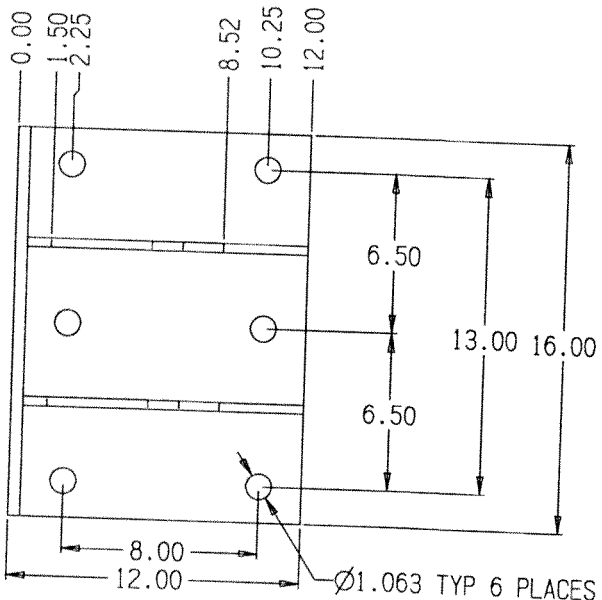

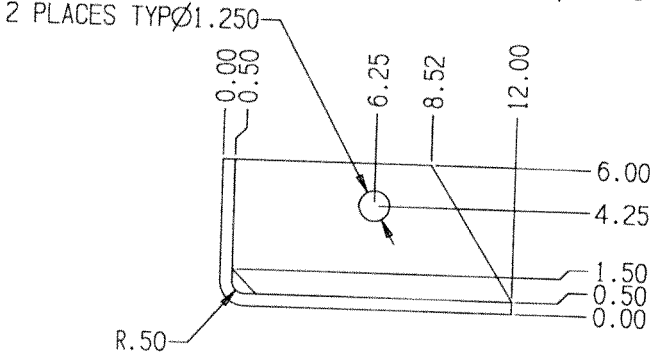

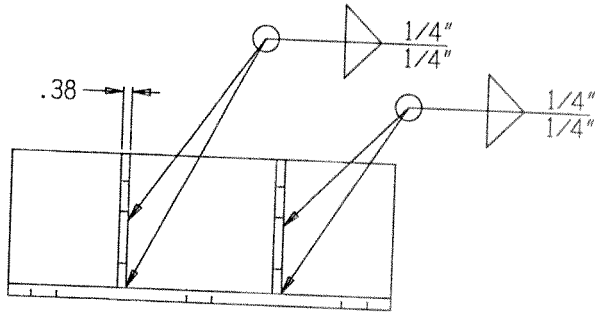

NOTES:
1. MATERIAL ASTM A-36 OR EQUAL. PLATE 3/8 AND 1/2" THICK.
2. HOT DIP GALVANIZE THE PART PER ASTM A-123-89. ALTERNATE FINISH TO BE BLACK ENAMEL PAINT FINISH PER SII PAINTING STANDARDS. DATED 7/13/98. HOT DIP GALVANIZED IS THE PREFERRED FINISH.
3. PART SHOWN IS MADE WITH A BENT PLATE. BEND MUST BE PERPENDICULAR TO THE PLATE GRAIN.
4. WELDED FABRICATION CAN BE SUBSTITUTED FOR THE BEND, BUT WELD MUST BE FULL PENETRATION WELD FROM BOTH SIDES AND GROUND SMOOTH ON THE BOTTOM OF THE PLATE.
5. DEBUR ALL EDGES. HEAVILY DEBUR HOLE ON VERTICAL PLATE (A SMALL RADIUS IS PREFERRED).

2/12/13

SNYDER INDUSTRIES INC.
LINCOLN, NE 68504 PHONE:(402) 467-5221 FAX:(402) 467-3247

SCALE: 1:3	APPROVED BY:	DRAWN BY: D.A.O.
DATE: 5/18/04		REVISED

SEISMIC ANCHOR PLATE - 6 BOLT HEAVY VERSION

TOLERANCES UNLESS OTHERWISE SPECIFIED:
FRACTIONAL: ±1/32"; ANGULAR: ±1°
DECIMAL: .X = ±0.100"; .XX = ±0.030"; .XXX = ±0.010"

DRAWING NUMBER B-2469

PSC Environmental Services, LLC
Fernley, Lyon County, Nevada

Structural Calculations
For
Poly Tank Foundations

Design Code: 2009 IBC

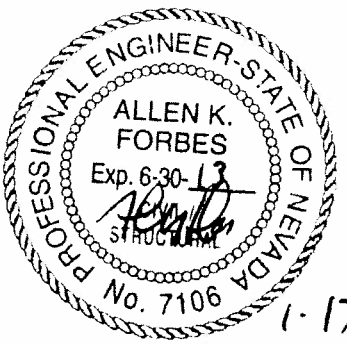

1-17-13

Prepared for:

Mr. Jim Dailey
Equipment Pro Incorporated
721 Parkwood Drive
Ste. Genevieve, MO 63670

January 11, 2013

FEG Project Number: 121039

Title : PSC Fernley, Nevada
Dsgnr: JJS
Description : Tank Footing Design
Scope :

Job # 121039
Date: 12:07PM, 11 JAN 13

Rev: 580.02
User: KW-0603476, Ver 5.8.0, 1-Dec-2003
(c)1983-2003 ENERCALC Engineering Software

General Footing Analysis & Design

Description 6,500 Gal Tank

General Information

Code Ref: ACI 318-02, 1997 UBC, 2003 IBC, 2003 NFPA 5000

Allowable Soil Bearing	1,500.0 psf	**Dimensions...**	
Short Term Increase	1.000	Width along X-X Axis	14.000 ft
Seismic Zone	4	Length along Y-Y Axis	14.000 ft
Live & Short Term Combined		Footing Thickness	6.00 in
f'c	4,000.0 psi	Col Dim. Along X-X Axis	84.00 in
Fy	60,000.0 psi	Col Dim. Along Y-Y Axis	84.00 in
Concrete Weight	145.00 pcf	Base Pedestal Height	0.000 in
Overburden Weight	0.00 psf	Min Steel %	0.0014
		Rebar Center To Edge Distance	2.00 in

Loads

Applied Vertical Load...

Dead Load	77.200 k	...ecc along X-X Axis	0.000 in
Live Load	k	...ecc along Y-Y Axis	0.000 in
Short Term Load	k		

Applied Moments...	Creates Rotation about Y-Y Axis (pressures @ left & right)	Creates Rotation about X-X Axis (pressures @ top & bot)
Dead Load	k-ft	k-ft
Live Load	k-ft	k-ft
Short Term	228.100 k-ft	228.100 k-ft

Applied Shears...	Creates Rotation about Y-Y Axis (pressures @ left & right)	Creates Rotation about X-X Axis (pressures @ top & bot)
Dead Load	k	k
Live Load	k	k
Short Term	k	k

Summary

Caution: X(short)ecc>Widt

14.00ft x 14.00ft Footing, 6.0in Thick, w/ Column Support 84.00 x 84.00in x 0.0in high

	DL+LL	DL+LL+ST
Max Soil Pressure	466.4	966.3 psf
Allowable	1,500.0	1,500.0 psf
"X" Ecc. of Resultant	0.000 in	29.944 in
"Y" Ecc. of Resultant	0.000 in	29.944 in
X-X Min. Stability Ratio	2.805	1.500 :1
Y-Y Min. Stability Ratio	2.805	

	Actual	Allowable
Max Mu	7.019 k-ft per ft	
Required Steel Area		0.423 in2 per ft
Shear Stresses....	Vu	Vn * Phi
1-Way	76.568	107.517 psi
2-Way	54.868	131.953 psi

Footing Design

Shear Forces	ACI C-1	ACI C-2	ACI C-3	Vn * Phi
Two-Way Shear	46.92 psi	54.87 psi	35.27 psi	131.95 psi
One-Way Shears...				
Vu @ Left	33.13 psi	76.57 psi	49.22 psi	107.52 psi
Vu @ Right	33.13 psi	1.05 psi	0.67 psi	107.52 psi
Vu @ Top	33.13 psi	76.57 psi	49.22 psi	107.52 psi
Vu @ Bottom	33.13 psi	1.05 psi	0.67 psi	107.52 psi

Moments	ACI C-1	ACI C-2	ACI C-3	Ru / Phi	As Req'd
Mu @ Left	2.89 k-ft	-0.22 k-ft	-0.14 k-ft	200.5 psi	0.17 in2 per ft
Mu @ Right	2.89 k-ft	7.02 k-ft	4.51 k-ft	487.4 psi	0.42 in2 per ft
Mu @ Top	2.89 k-ft	7.02 k-ft	4.51 k-ft	487.4 psi	0.42 in2 per ft
Mu @ Bottom	2.89 k-ft	-0.22 k-ft	-0.14 k-ft	200.5 psi	0.17 in2 per ft

Title : PSC Fernley, Nevada
Dsgnr: JJS
Description : Tank Footing Design
Job # 121039
Date: 12:07PM, 11 JAN 13

Scope :

General Footing Analysis & Design

Description 6,500 Gal Tank

Soil Pressure Summary

Service Load Soil Pressures	Left	Right	Top	Bottom
DL + LL	466.38	466.38	466.38	466.38 psf
DL + LL + ST	0.00	966.30	966.30	0.00 psf
Factored Load Soil Pressures				
ACI Eq. C-1	559.65	559.65	559.65	559.65 psf
ACI Eq. C-2	0.00	1,352.82	1,352.82	0.00 psf
ACI Eq. C-3	0.00	869.67	869.67	0.00 psf

ACI Factors (per ACI 318-02, applied internally to entered loads)

ACI C-1 & C-2 DL	1.200	ACI C-2 Group Factor	0.750	Add'l "1.4" Factor for Seismic	1.400
ACI C-1 & C-2 LL	1.600	ACI C-3 Dead Load Factor	0.900	Add'l "0.9" Factor for Seismic	0.900
ACI C-1 & C-2 ST	1.000	ACI C-3 Short Term Factor	1.000		
....seismic = ST * :	1.100	Used in ACI C-2 & C-3			

3/12

Summary Sketch | Printing |

Print Sketch

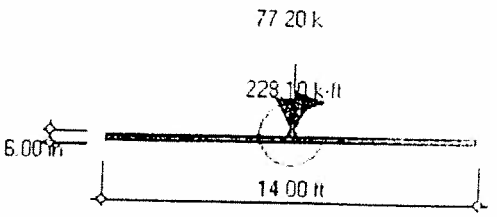

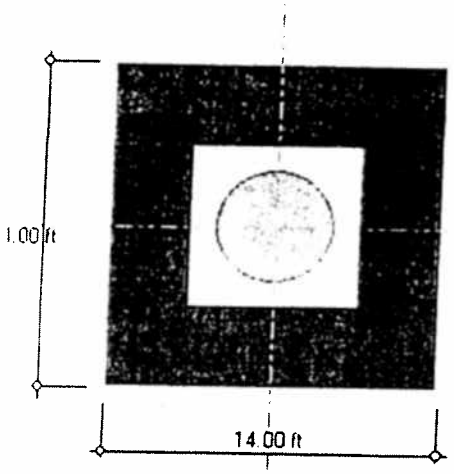

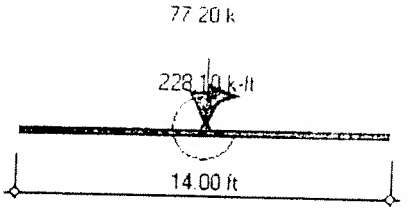

6,500 Gallon Tank

4/12

Title : PSC Fernley, Nevada — Job # 121039
Dsgnr: JJS — Date: 12:07PM, 11 JAN 13
Description : Tank Footing Design

Scope :

General Footing Analysis & Design

Description 12,500 Gal Tank

General Information

Code Ref: ACI 318-02, 1997 UBC, 2003 IBC, 2003 NFPA 5000

Allowable Soil Bearing	1,500.0 psf	**Dimensions...**	
Short Term Increase	1.000	Width along X-X Axis	17.330 ft
Seismic Zone	4	Length along Y-Y Axis	17.330 ft
Live & Short Term Combined		Footing Thickness	6.00 in
f'c	4,000.0 psi	Col Dim. Along X-X Axis	102.00 in
Fy	60,000.0 psi	Col Dim. Along Y-Y Axis	102.00 in
Concrete Weight	145.00 pcf	Base Pedestal Height	0.000 in
Overburden Weight	0.00 psf	Min Steel %	0.0014
		Rebar Center To Edge Distance	2.00 in

Loads

Applied Vertical Load...

Dead Load	149.000 k	...ecc along X-X Axis	0.000 in
Live Load	k	...ecc along Y-Y Axis	0.000 in
Short Term Load	k		

Applied Moments...	Creates Rotation about Y-Y Axis (pressures @ left & right)	Creates Rotation about X-X Axis (pressures @ top & bot)
Dead Load	k-ft	k-ft
Live Load	k-ft	k-ft
Short Term	586.100 k-ft	586.100 k-ft

Applied Shears...	Creates Rotation about Y-Y Axis (pressures @ left & right)	Creates Rotation about X-X Axis (pressures @ top & bot)
Dead Load	k	k
Live Load	k	k
Short Term	k	k

Summary

Caution: X(short)ecc>Widt

17.33ft x 17.33ft Footing, 6.0in Thick, w/ Column Support 102.00 x 102.00in x 0.0in high

	DL+LL	DL+LL+ST
Max Soil Pressure	568.6	1,255.4 psf
Allowable	1,500.0	1,500.0 psf
"X" Ecc. of Resultant	0.000 in	41.184 in
"Y" Ecc. of Resultant	0.000 in	41.184 in
X-X Min. Stability Ratio	2.525	1.500 :1
Y-Y Min. Stability Ratio	2.525	

	Actual	Allowable
Max Mu	12.608 k-ft per ft	
Required Steel Area		0.826 in2 per ft

Shear Stresses....	Vu	Vn * Phi
1-Way	106.412	107.517 psi
2-Way	78.464	127.804 psi

Footing Design

Shear Forces	ACI C-1	ACI C-2	ACI C-3	Vn * Phi
Two-Way Shear	77.81 psi	78.46 psi	58.85 psi	127.80 psi
One-Way Shears...				
Vu @ Left	51.26 psi	106.41 psi	79.81 psi	107.52 psi
Vu @ Right	51.26 psi	-1.87 psi	-1.40 psi	107.52 psi
Vu @ Top	51.26 psi	106.41 psi	79.81 psi	107.52 psi
Vu @ Bottom	51.26 psi	-1.87 psi	-1.40 psi	107.52 psi

Moments	ACI C-1	ACI C-2	ACI C-3	Ru / Phi	As Req'd
Mu @ Left	5.80 k-ft	-0.56 k-ft	-0.42 k-ft	402.6 psi	0.34 in2 per ft
Mu @ Right	5.80 k-ft	12.61 k-ft	9.46 k-ft	875.5 psi	0.83 in2 per ft
Mu @ Top	5.80 k-ft	12.61 k-ft	9.46 k-ft	875.5 psi	0.83 in2 per ft
Mu @ Bottom	5.80 k-ft	-0.56 k-ft	-0.42 k-ft	402.6 psi	0.34 in2 per ft

General Footing Analysis & Design

Description 12,500 Gal Tank

Soil Pressure Summary

Service Load Soil Pressures	Left	Right	Top	Bottom
DL + LL	568.62	568.62	568.62	568.62 psf
DL + LL + ST	0.00	1,255.40	1,255.40	0.00 psf
Factored Load Soil Pressures				
ACI Eq. C-1	682.35	682.35	682.35	682.35 psf
ACI Eq. C-2	0.00	1,506.48	1,506.48	0.00 psf
ACI Eq. C-3	0.00	1,129.86	1,129.86	0.00 psf

ACI Factors (per ACI 318-02, applied internally to entered loads)

ACI C-1 & C-2 DL	1.200	ACI C-2 Group Factor	0.750	Add'l "1.4" Factor for Seismic	1.200
ACI C-1 & C-2 LL	1.600	ACI C-3 Dead Load Factor	0.900	Add'l "0.9" Factor for Seismic	0.900
ACI C-1 & C-2 ST	1.000	ACI C-3 Short Term Factor	1.000		
...seismic = ST * :	1.100 Used in ACI C-2 & C-3				

Summary Sketch | Printing |

Print Sketch

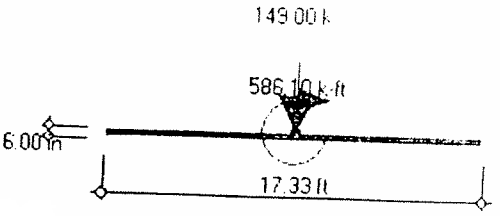

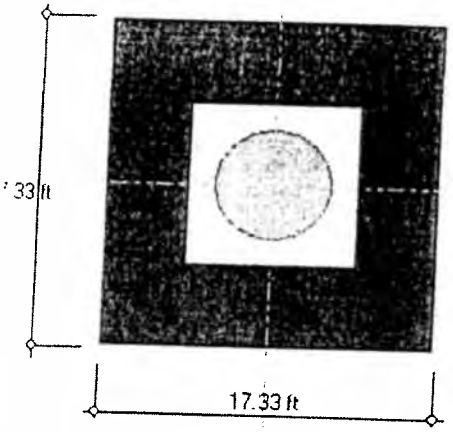

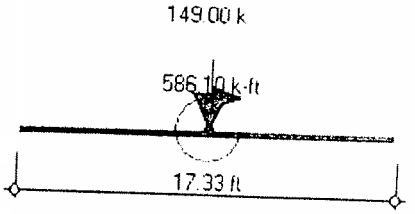

12,500 Gallon Tank

Jaik Choi Associates
Structural Engineering
(949)706-7789, Fax:(424)239-2666
email; jose@msn.com

Snyder Industries

Lincoln, NE

Sheet No
Job No 12-932A
Date: 12/20/12
By: J. Choi

C) FOUNDATION DESIGN

SII Vertical Ground Supported Tank (flat bottom)

Desgin loads = Vs = 0.434 W

Hc; Height of tank content
Ht; Height of tank top
We; Empty Weight of tank
Wc; Content Weight in tank
Wt; Total Weight of tank
Wf; Footing Weight
SG; Specific Gravity
Fd; Footing Diameter
Fe; Footing Edge Distance
Ft; Footing Thickness
Mf; Moment in the footing
Mot; Overturning Moment
Mr; Resisting Moment
F.S.; Factor of Safety for Overturning
SL; Sliding resistance
Fa; Soil bearing value (Direct)
Fb; Soil bearing value (Overturing)
Fs; Soil bearing value (Total)
b; Soil reaction resultant location
Sf; Section Modulus of footing
As; Area of reinforcing steel required

Design Parameter

Allow. Bearing "Fb"=	1500 psf x 1.33 =	1995 psf
Passive Pressure "Pp"=	250 psf x 1.33 =	332.5 psf
Friction Coeff. = u =	0.3	

1) Overturning

Mot = Vs*Hc/2
Total Dl.(TD) = W + Wt. Ftg.
Mresist (Mr) = TD*.5*Fw
Factor of Safety "F.S."=Mr/Mot = > 1.5

2) Sliding of Foundation

Load = Fp = Vs
Resist = u*Total Dl.+ Passive Pressure
SL > Vs

3) Soil Bearing

Result @ (Mr-Mot)/TD="b"
Fa = (Wt + Wf) / (.785*Fd^2)
Fb = (Wt + Wf)*(.5*Fd-b)/Sf
Fs = (Fa + Fb) psf < 1995 O.K.

SERVICE DEAD LOAD USED IN ENVELOPE

Design for Specific gravity (SG) = 1.4

INPUT PARAMETERS — **FOUNDATION SIZES**

PART NUMBER	TANK SIZE (GAL.)	TANK DIA. (FT.)	Hc (FT.)	Ht (FT.)	We (LBS.)	Wc (LBS.)	Wt (LBS.)	Fe (FT.)	Fd (FT.)	Ft (FT.)	b (FT.)	Wf (LBS.)
7140--	6500	10.00	11.59	12.64	1450	75839	77289	2.00	14.00	1.00	4.73	23079
5350--	12500	11.83	15.12	16.45	3100	145845	148945	2.75	17.33	1.50	5.76	53046

ULTIMATE SEISMIC OVERTURNING LOAD USED IN ENVELOPE

RESULTS — **SOIL BEARING & FOOTING REINFORCING**

PART NUMBER	Vs (LBS.)	SL (LBS.) > Vs	Mot (ft-k)	Mr (ft-k)	F.S. > 1.5	Fa psf	Fb psf	Fs psf	Mf ft.-k	As in2	Reinf. Size	in. o.c.
7140--	33569	31155	228.1	703	3.08	652	847	1499	2.84	0.14	# 4 @	17
5350--	64691	64541	586.1	1750	2.99	857	1147	2004	7.12	0.20	# 4 @	12

8/12

Title : PSC Fernley, Nevada
Dsgnr: JJS
Description : Tank Footing Design
Scope :

Job # 121039
Date: 12:34PM, 11 JAN 13

General Footing Analysis & Design

Description 7,400 Gal Tank on Existing 12" Concrete Pad

General Information

Code Ref: ACI 318-02, 1997 UBC, 2003 IBC, 2003 NFPA 5000

Allowable Soil Bearing	1,500.0 psf	Dimensions...	
Short Term Increase	1.000	Width along X-X Axis	14.500 ft
Seismic Zone	4	Length along Y-Y Axis	14.500 ft
Live & Short Term Combined		Footing Thickness	12.00 in
f'c	4,000.0 psi	Col Dim. Along X-X Axis	102.00 in
Fy	60,000.0 psi	Col Dim. Along Y-Y Axis	102.00 in
Concrete Weight	145.00 pcf	Base Pedestal Height	0.000 in
Overburden Weight	0.00 psf	Min Steel %	0.0014
		Rebar Center To Edge Distance	5.00 in

Loads

Applied Vertical Load...			
Dead Load	87.500 k	...ecc along X-X Axis	0.000 in
Live Load	k	...ecc along Y-Y Axis	0.000 in
Short Term Load	k		

	Creates Rotation about Y-Y Axis (pressures @ left & right)	Creates Rotation about X-X Axis (pressures @ top & bot)
Applied Moments...		
Dead Load	k-ft	k-ft
Live Load	k-ft	k-ft
Short Term	382.400 k-ft	382.400 k-ft
Applied Shears...		
Dead Load	k	k
Live Load	k	k
Short Term	k	k

Summary

Caution: X(short)ecc>Widt

14.50ft x 14.50ft Footing, 12.0in Thick, w/ Column Support 102.00 x 102.00in x 0.0in high

	DL+LL	DL+LL+ST		Actual	Allowable
Max Soil Pressure	561.2	1,353.1 psf	Max Mu	5.998 k-ft per ft	
Allowable	1,500.0	1,500.0 psf	Required Steel Area		0.259 in2 per ft
"X" Ecc, of Resultant	0.000 in	38.893 in			
"Y" Ecc, of Resultant	0.000 in	38.893 in	Shear Stresses....	Vu	Vn * Phi
X-X Min. Stability Ratio	2.237	1.500 :1	1-Way	37.588	107.517 psi
Y-Y Min. Stability Ratio	2.237		2-Way	21.720	142.041 psi

Footing Design

Shear Forces	ACI C-1	ACI C-2	ACI C-3	Vn * Phi
Two-Way Shear	20.71 psi	21.72 psi	16.29 psi	142.04 psi
One-Way Shears...				
Vu @ Left	14.37 psi	37.59 psi	28.19 psi	107.52 psi
Vu @ Right	14.37 psi	-5.01 psi	-3.75 psi	107.52 psi
Vu @ Top	14.37 psi	37.59 psi	28.19 psi	107.52 psi
Vu @ Bottom	14.37 psi	-5.01 psi	-3.75 psi	107.52 psi

Moments	ACI C-1	ACI C-2	ACI C-3	Ru / Phi	As Req'd
Mu @ Left	2.24 k-ft	-0.78 k-ft	-0.59 k-ft	50.9 psi	0.26 in2 per ft
Mu @ Right	2.24 k-ft	6.00 k-ft	4.50 k-ft	136.0 psi	0.26 in2 per ft
Mu @ Top	2.24 k-ft	6.00 k-ft	4.50 k-ft	136.0 psi	0.26 in2 per ft
Mu @ Bottom	2.24 k-ft	-0.78 k-ft	-0.59 k-ft	50.9 psi	0.26 in2 per ft

Description 7,400 Gal Tank on Existing 12" Concrete Pad

Soil Pressure Summary

Service Load Soil Pressures	Left	Right	Top	Bottom
DL + LL	561.17	561.17	561.17	561.17 psf
DL + LL + ST	0.00	1,353.14	1,353.14	0.00 psf
Factored Load Soil Pressures				
ACI Eq. C-1	673.41	673.41	673.41	673.41 psf
ACI Eq. C-2	0.00	1,623.77	1,623.77	0.00 psf
ACI Eq. C-3	0.00	1,217.82	1,217.82	0.00 psf

ACI Factors (per ACI 318-02, applied internally to entered loads)

ACI C-1 & C-2 DL	1.200	ACI C-2 Group Factor	0.750	Add'l "1.4" Factor for Seismic	1.200
ACI C-1 & C-2 LL	1.600	ACI C-3 Dead Load Factor	0.900	Add'l "0.9" Factor for Seismic	0.900
ACI C-1 & C-2 ST	1.000	ACI C-3 Short Term Factor	1.000		
....seismic = ST * :	1.100 Used in ACI C-2 & C-3				

Summary Sketch | Printing |

Print Sketch

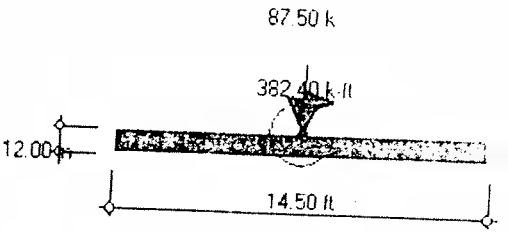

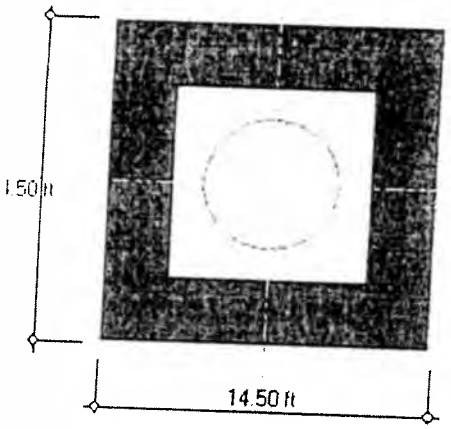

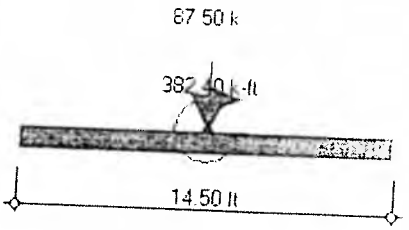

7,400 Gallon Tank

Jaik Choi Associates
Structural Engineering
(949)706-7789, Fax:(424)239-2666
email, jcse@msn.com

Snyder

Lincoln, NE

Sheet No. [illegible]
Job No. 12-932A
Date. 12/20/12
By. J. Choi

Structural Calculations for the footing supporting tank

C) FOUNDATION DESIGN

Vertical Ground Supported Tank (Cone bottom)

Desgin loads = Vs = 0.434 W

Design Parameter

Allow. Bearing "Fb"=	1500 psf x 1.33 =	1995 psf
Passive Pressure "Pp"=	250 psf x 1.33 =	332.5 psf
Friction Coeff. = u =	0.4	

Hc; Height of tank content
Ht; Height of tank top
We; Empty Weight of tank
Wc; Content Weight in tank
Wt; Total Weight of tank
Wf; Footing Weight
SG; Specific Gravity
Fd; Footing Diameter
Fe; Footing Edge Distance
Ft; Footing Thickness
Mf; Moment in the footing
Mot; Overturning Moment
Mr; Resisting Moment
F.S.; Factor of Safety for Overturning
SL; Sliding resistance
Fa; Soil bearing value (Direct)
Fb; Soil bearing value (Overturing)
Fs; Soil bearing value (Total)
b; Soil reaction resultant location
Sf; Section Modulus of footing
As; Area of reinforcing steel required

1) Overturning

Mot = Vs*Hc/2
Total Dl.(TD) = W + Wt. Ftg
Mresist (Mr) = TD*.5*Fw
Factor of Safety "F.S."=Mr/Mot = > 1.5

2) Sliding of Foundation

Load = Fp = Vs
Resist = u*Total Dl.+ Passive Pressure
SL > Vs

3) Soil Bearing

Result @ (Mr-Mot)/TD="b"
Fa = (Wt + Wf) / (.785*Fd^2)
Fb = (Wt + Wf)*(.5*Fd-b)/Sf
Fs = (Fa + Fb) psf < 1995 O.K.

Design for Specific gravity (SG) = 1.4

Footing width = 14.50 ft
Saddle dist. = 8.30 ft

SERVICE DEAD LOAD USED IN ENERCALC

INPUT PARAMETERS

FOUNDATION SIZES

PART NUMBER	TANK SIZE (GAL.)	TANK DIA (FT.)	Hcg (FT.)	Ht (FT.)	We (LBS.)	Wc (LBS.)	Wt (LBS.)	Fe (FT.)	Fd (FT.)	Ft (FT.)	b (FT.)	Wf (LBS.)
5320000N	7400	11.83	9.06	13.36	1200	86340	87540	1.33	14.49	1.00	3.84	24723

RESULTS

SOIL BEARING & FOOTING REINFORCING

PART NUMBER	Vs (LBS.)	SL (LBS.) > Vs	Mot (ft-k)	Mr (ft-k)	F.S. > 1.5	Fa psf	Fb psf	Fs psf	Mf ft-k	As in2	Reinf Size	Reinf in. o.c.
5320000N	38014	45987	382.4	813	2.13	681	1280	1962	3.59	0.19	# 4 @	13

ULTIMATE SEISMIC OVERTURNING LOAD USED IN ENERCALC

Frontenac Engineering Group
2725 Sutton Boulevard
Saint Louis, Missouri 63143
314-644-2200 Fax 314-644-0645

JOB 151639
SHEET NO 12 OF
CALCULATED BY JJS DATE 1/11/12
CHECKED BY DATE
SCALE

DETERMINE SIZE + SPACING OF REINFORCING

1. 6,500 GALLON TANK

$A_{s\,req} = 0.42\ in^2/ft$

PROVIDE NO. 6 BARS @ 12" O.C. EACH WAY

$A_{s\,provided} = 0.44\ in^2/ft$ ok

2. 12,500 GALLON TANK

$A_{s\,req} = 0.83\ in^2/ft$

PROVIDE NO. 6 BARS @ 6" O.C.

$A_{s\,provided} = 0.88\ in^2/ft$ ok

3. 7,400 GAL. TANK

TANK RESTS ON EXISTING 12" CONC PAD + REQUIRES ONLY MINIMUM REINFORCING. ASSUME EXISTING PAD CONTAINS SUFFICIENT REINFORCING. ok

Frontenac Engineering Group
2725 Sutton Boulevard
Saint Louis, Missouri 63143
314-644-2200 Fax 314-644-0645

JOB 121039 PSC NEVADA
SHEET NO. 12A OF 12
CALCULATED BY JJS DATE 1/15/13
CHECKED BY DATE
SCALE

CHECK CONC. SLAB FOR PUNCHING SHEAR

OVERTURNING MOMENT:

$M_{OT} = 3823.4$ K-ft

DEAD WT OF STRUCTURE:

$W_t = 87.5$ Kips

DISTANCE B/W SUPPORTS

$D = 11'$

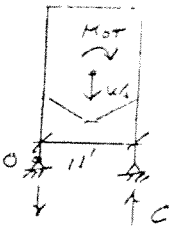

ASSUME COMPRESSION FORCE IS DISTRIBUTED B/W (2) 4"x3½"x¼" ANGLE SUPPORTS.

$\Sigma M_o = 0$

$M_{OT} + W_t \times D/2 = C \times D$

$1.0(3823.4) + 1.2(87.5)(5.5) = C \times 11$

$C = 387.3$ Kips (ULTIMATE DOWNWARD FORCE)

ULTIMATE FORCE PER ft

$V_u = \frac{1}{2} C = 43.7$ Kips

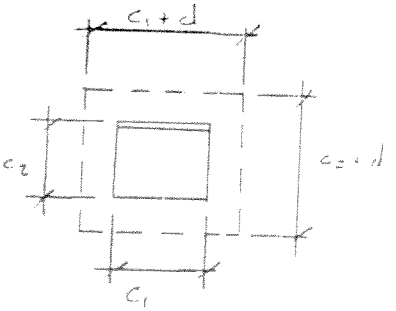

$c_1 = 4''$
$c_2 = 3.5''$
$d = 6''$
$c_1 + d = 10''$
$c_2 + d = 9.5''$
$b_o = 2(c_1 + d) + 2(c_2 + d)$
$b_o = 39$ in
$\phi V_c = \phi 4 \lambda \sqrt{f'_c}\, b_o d$
$\phi V_c = 0.75(4)\sqrt{4000}\,(27)(6)$
$\phi V_c = 41.4$ Kips $\approx V_u = 43.7$ Kips ok (SOME OF THE COMPRESSION FORCE WILL BE DISTRIBUTED TO ADJACENT BASE PL.)

∴ SLAB IS ADEQUATE TO RESIST PUNCHING SHEAR

Resistance chart Polyethylene, Polypropylene, PVC, CPVC, Titanium, Hastalloy, Viton, Epdm, Stainless Polyethylene, Polypropylene, Crosslink and Linear Polyethylene, PVC, CPVC, EPDM, VITON, 316 Stainless steel **Home**

Pastic Tank Chemical Resistance Chart for Polypropylene, Polyethylene Linear and Crosslink, gasket materials.

This Chemical Resistance Chart is provided as a general guide. Confirm this information with your chemical sales agent, get him to confirm container materials and get your MSDS report.

(No responsibility for performance is accepted, based on these guidelines) Remember chemical compounds have different characteristics as the compound's constituents percentages of concentrations CHANGE, temperature, pressure, particulate content, trace metals; all have an impact on corrosion.

Read The Above, it is very IMPORTANT that you understand these variables as you utilize this chart as a guide...

PE = Polyethylene... PP = Polypropylene... XLPE = Crosslink Polyethylene... A = Excellent... B = Good... C = Not suggested

Chemical resistance information. You can search this page by using your browser's *Find on this page* option.

Chemical Resistance Data

		TANK MATERIALS						FITTING MATERIAL						
		PE		PP		XLPE		PVC	CPVC	EPDM	NEOPRENE	VITON	316 SS	TITANIUM	HASTELLOY C
REAGENT	CONC.	70	140	70	140	70	140								
Acetone		C	C	C	C	C	C	C	C	C	C	C	C	C	C
Acetaldehyde*	100%	B	C	A	B	B	C	C	C	A	C	C	A	A	A
Acetic Acid*	10%	A	A	A	A	A	A	A	A	A	A	B	A	A	A
Acetic Acid*	60%	A	B	A	A	A	A	A	A	A	B	B	A	A	A
Acetic Anhydride		C	C	-	-	C	C	C	C	B	A	C	A	A	A
Air		A	A	A	A	A	A	A	A	A	A	A	A	A	A
Aluminum Chloride	all concentr.	A	A	A	A	A	A	A	A	A	A	A	C	B	A
Aluminum Fluoride	all concentr.	A	A	A	A	A	A	A	A	A	A	A	C	A	B
Aluminum Sulphate	all concentr.	A	A	A	A	A	A	A	A	A	A	A	B	A	B
Alums	all types	A	A	A	A	A	A	A	A	A	A	A	A	-	A
Ammonia	100% dry gas	A	A	A	A	A	A	B	A	A	A	A	A	C	A
Ammonium Carbonate		A	A	A	A	A	A	A	A	A	A		B	A	B
Ammonium Chloride	sat'd	A	A	A	A	A	A	A	A	A	A	A	C	B	A
Ammonium Fluoride	sat'd	A	A	A	A	A	A	A	A	B	A	A	C	A	A
Ammonium Hydroxide	10%	A	A	A	A	A	A	A	A	B	A	B	A	A	B
Ammonium Hydroxide	28%	A	A	A	A	A	A	A	A	A	A	B	A	A	B
Ammonium Nitrate	sat'd.	A	A	A	A	A	A	A	A	A	B	A	A	A	B
Ammonium Persulphate	sat'd.	A	A	A	A	A	A	A	A	A	A	A	B	A	B
Ammonium Sulphate	sat'd.	A	A	A	A	A	A	A	A	A	A	A	B	A	B
Ammonium Metaphoshate	sat'd.	A	A	A	A	A	A	A	A	A	A	A	B	A	B
Ammonium Sulfide	sat'd.	A	A	A	A	A	A	A	A	A	A	A	B	A	B
Amyl Acetate*#	100%	C	C	B	C	C	C	C	C	A	C	C	A	A	A
Amyl Alcohol*#	100%	A	A	A	B	A	A	A	A	A	A	B	A	B	A
Amyl Chloride*#	100%	C	C	C	C	C	C	C	C	C	C	B	A	C	A
Aniline*#	100%	C	C	A	A	A	C	C	C	B	C	C	B	C	B

Aqua Regia+		C	C	C	C	C	C	C	C	C	C	B	C	A	C				
Arsenic Acid	all concentr.	A	A	A	A	A	A	A	A	A	A	A	A	B	B				
Aromatic Hydrocarbons*#		C	C	-	-	C	C	C	C	C	C	A	C	-	-				
Ascorbic Acid	10%	A	A	A	A	A	A	A	A	A	A	A	-	-	-				
Barium Carbonate	sat'd.	A	A	A	A	A	A	A	A	A	A	A	B	A	B				
Barium Chloride	sat'd.	A	A	A	A	A	A	A	A	A	A	A	A	A	B				
Barium Hydroxide		A	A	A	A	A	A	A	A	A	A	A	B	B	A				
Barium Sulphate	sat'd.	A	A	A	A	A	A	B	B	A	A	A	B	B	-				
Barium Sulphate	sat'd.	A	A	A	A	A	A	A	A	A	A	A	B	A	A				
Beer		A	A	A	A	C	C	A	A	A	C	A	A	B	B				
Benzene*#		C	C	B	C	C	C	C	C	C	C	A	B	A	B				
Benzoic Acid	all concentr.	A	A	A	A	A	A	A	A	C	A	A	B	B	A				
Bismuth Carbonate	sat'd.	A	A	A	A	A	A	A	A	A	A	A	A	A	B				
Bleachlye	10%	A	A	A	A	A	A	A	A	A	A	A	A	B	B				
Borax	sat'd.	A	A	A	A	A	A	A	A	A	A	A	A	B	A				
Boric Acid	all concentr.	A	A	A	A	A	A	A	B	A	A	A	A	A	A				
Boron Trifluoride		A	A	-	-	A	A	A	A	A	A	A	-	B	-				
Brine		A	A	A	A	A	A	A	A	A	A	A	C	A	A				
Bromine+	liquid	C	C	C	C	C	C	C	C	C	C	A	C	A	A				
Bromine Water #	sat'd.	C	C	C	-	C	C	C	C	C	C	A	C	A	A				
Butanediol*	10%	A	A	A	A	A	A	-	-	-	-	-	-	-	-				
Butanediol*	60%	A	A	A	A	A	A	-	-	-	-	-	-	-	-				
Butanedial*	100%	A	A	A	A	A	A	-	-	-	-	-	-	-	-				
Butter*		A	A	A	A	C	C	-	A	A	B	A	A	-	-				
n-Butyl Acetate*#	100%	A	C	C	C	A	C	B	C	B	C	B	B	A	A				
n-Butyl Alcohol	100%	A	A	A	-	A	A	A	B	B	A	A	A	A	A				
Butyric Acid#	conc.	C	C	-	-	-	-	B	B	B	C	B	B	A	A				
Calcium Bisulphide		A	A	A	A	A	A	A	A	A	A	A	B	A	-				
Calcium Carbonate	sat'd.	A	A	A	A	A	A	A	A	A	A	A	B	B	B				
Calcium Chlorate	sat'd.	A	A	A	A	A	A	A	A	A	-	A	-	-	-				
Calcium Chloride	sat'd.	A	A	A	A	A	A	A	A	B	A	A	B	A	A				
Calcium Hydroxide	conc.	A	A	A	A	A	A	A	A	B	C	A	B	A	B				
Calcium Hyphochlorite	bleach sol'n.	A	A	A	B	B	B	B	B	A	C	A	C	-	B				
Calcium Nitrate	50%	A	A	A	A	A	A	A	A	A	B	A	A	A					
Calcium Oxide	sat'd.	A	A	-	-	A	A	A	A	A	A	A	A	A	A				
Calcium Sulphate		A	A	A	A	A	A	A	A	A	C	-	B	A	A				
Camphor Oil*#		C	C	C	C	C	C	-	-	-	-	A	A						
Carbon Dioxide	all concentr.	A	A	A	A	A	A	A	A	A	A	A	A	A	A				
Carbon Disulphide		C	C	B	C	C	C	C	C	C	C	A	B	B	B				
Carbon Monoxide		A	A	A	A	A	A	A	A	A	A	A	A	A	A				
Carbon Tectrachloride#		C	C	C	C	C	C	B	C	C	C	A	B	A	A				
Carbonic Acid		A	A	A	A	A	A	A	A	A	A	A	A	B	A				
Caster Oil#	conc.	A	A	A	A	A	A	A	A	A	A	A	A	A	A				
Chlorine+	100% dry gas	C	C	C	C	B	C	C	C	C	C	A	C	C	B				
Chlorineliquid+		C	C	C	C	C	C	A	A	C	C	A	C	A	A				
Chlorine Water+	2% sat'd. sol'n.	A	A	A	B	A	A	A	A	C	C	A	C	A	A				

Chlorobenzene*#		C	C	C	C	C	C	C	C	C	C	A	A	A	B
Chlorofoam*#		B	C	C	C	C	C	C	C	C	C	A	A	A	A
Chlorosulphonic Acid	100%	C	C	C	C	C	C	C	C	C	C	C	B	C	A
Chrome Alum	sat'd.	A	A	A	A	A	A	A	A	A	A	A	A	A	A
Chromic Acid	80%	-	-	A	-	-	-	C	C	C	C	B	B	C	B
Chromic Acid	50%	A	B	A	A	A	B	B	B	B	C	A	B	C	B
Chromic Acid	10%	A	A	A	A	A	A	A	A	B	C	A	B	C	B
Cider*		A	A	A	A	C	C	-	-	-	A	A	A	A	-
Citric Acid*	sat'd.	A	A	A	A	A	A	-	B	A	A	A	A	A	A
Coconut Oil Alcohols*		A	A	A	A	A	A	A	A	A	A	A	A	A	A
Coffee		A	A	A	A	A	A	A	A	A	A	A	A	A	A
Cola Concentrates*		A	A	A	A	A	A	A	A	A	A	A	A	A	A
Copper Chloride	sat'd.	A	A	A	A	A	A	A	A	A	A	A	C	A	A
Copper Cyanide	sat'd.	A	A	A	A	A	A	A	A	A	A	A	B	B	B
Copper Fluoride	2%	A	A	A	A	A	A	A	A	A	-	A	A	A	A
Copper Nitrate	sat'd.	A	A	A	A	A	A	A	A	-	A	A	B	B	A
Copper Sulphate	sat'd.	A	A	A	A	A	A	A	A	A	A	A	B	A	A
Corn Oil*		A	A	A	A	A	A	A	A	A	A	A	A	A	A
Cottonseed Oil*		A	A	A	A	A	A	A	A	A	A	A	A	A	A
Cuprous Chloride	sat'd.	A	A	A	A	A	A	A	A	A	A	A	C	A	A
Detergents, Synthetic*		A	A	A	A	A	A	A	A	A	A	A	A	A	A
Developers, Photographic		A	A	A	A	A	A	A	A	-	-	-	A	A	A
Dextrin	sat'd.	A	A	A	A	A	A	A	A	A	A	A	A	A	A
Destrose	sat'd.	A	A	A	A	A	A	A	A	A	A	A	A	A	A
Diazo Salts		A	A	A	A	A	A	A	A	-	-	-	-	-	-
Dibutylphthalate*#		B	B	A	B	B	B	C	C	-	-	-	A	-	-
Dichlorobenzene*#		C	C	-	-	C	C	-	-	-	-	-	-	-	-
Diethyl Ketone*#		B	B	-	-	B	C	-	-	-	-	-	-	-	-
Diethylene Glycol*		A	A	A	A	A	A	C	C	A	A	A	A	A	B
Diglycolic Acid*		A	A	-	-	A	A	A	A	A	-	A	A	A	-
Dimethylamine		C	C	-	-	C	C	C	C	C	A	C	A	-	-
Disodium Phosphate		A	A	A	A	A	A	A	A	-	-	A	A	A	-
Emulsions, Photgraphic*		A	A	A	A	A	A	A	A	A	A	A	A	A	A
Ethyl Acetate*#	100%	B	C	B	B	B	C	C	C	B	C	C	A	A	A
Ethyl Alcohol*	100%	A	A	A	A	A	A	A	A	A	A	A	A	A	A
Ethyl Alcohol*	35%	A	A	A	A	A	A	A	A	A	A	A	A	A	A
Ethyl Benzene*#		C	C	C	C	C	C	-	-	-	-	-	A	-	-
Ethyl Chloride#		C	C	C	C	C	C	C	C	A	B	A	A	A	A
Ethyl Ether#		C	C	B	C	C	C	C	C	C	C	C	A	A	B
Ethylene Chloride*#		C	C	C	C	C	C	C	C	A	B	A	A	B	C
Ethylene Glycol*		A	A	A	A	A	A	A	A	A	A	A	A	A	B
Fatty Acids*		A	A	A	A	A	A	B	B	C	B	A	A	B	A
Ferric Chloride	sat'd.	A	A	A	A	A	A	A	A	A	B	A	C	A	B
Ferric Nitrate	sat'd.	A	A	A	A	A	A	A	A	A	A	A	A	A	B
Ferrous Chloride	sat'd.	A	A	A	A	A	A	A	A	A	A	A	C	A	B
Ferrous Sulphate		A	A	A	A	A	A	A	A	A	A	A	A	A	A
Fish Solubles*		A	A	A	A	A	A	A	A	A	A	A	A	A	A
Fluoboric Acid		A	A	A	A	A	A	A	A	A	A	A	C	C	A
Fluosillic Acid	conc.	A	B	A	B	A	A	A	A	A	A	A	B	C	A
Fluosillic Acid	32%	A	A	A	A	A	A	A	A	A	A	A	B	C	A

Formic Acid	all concentr.	A	A	A	A	A	A	A	A	A	A	C	C	C	A
Fructose	sat'd.	A	A	A	A	A	A	A	A	A	A	A	A	A	A
Fruit Pulp*		A	A	A	A	A	A	A	A	A	A	A	A	A	A
Furfural#	100%	B	C	C	C	C	C	C	C	B	C	C	B	B	A
Furfuryl Alcohol*#		B	C	C	C	C	C	-	-	-	-	A	A	-	-
Gallic Acid*	sat'd.	A	B	A	A	A	A	A	B	B	B	A	B	A	B
Gasoline*#		B	C	B	C	A	C	C	C	C	B	A	A	A	A
Glucose		A	A	A	A	A	A	A	A	A	A	A	A	A	A
Glycerine*		A	A	A	A	A	A	A	A	A	A	A	A	A	A
Glycol*		A	A	A	A	A	A	A	A	A	A	A	A	A	A
Glycolic Acid*	30%	A	A	A	A	A	A	A	A	A	A	A	A	A	A
Grape Sugar	sat'd. ag.	A	A	A	A	A	A	A	A	A	A	A	A	A	A
n-Heptane*#		B	B	-	-	A	C	C	A	C	A	A	A	A	A
Hexachlorobenzene		A	-	-	-	A	A	-	-	-	-	-	-	-	-
Hexanol, Tertiary*		A	A	-	-	A	A	-	-	-	-	B	A	A	-
Hydrobromic Acid	50%	A	A	A	A	A	A	A	A	A	B	A	C	A	B
Hydrobromic Acid	all conc.	A	A	A	A	A	A	A	A	A	-	A	C	C	A
Hydrobromic Acid	sat'd.	A	A	-	-	A	A	A	A	A	-	A	C	B	
Hydrochloric Acid		A	A	-	-	A	A	A	A	A	-	A	C	B	A
Hydrofluoric Acid*	60%	A	A	A	A	A	A	A	A	A	-	A	C	C	A
Hydrogen	100%	A	A	A	A	A	A	A	A	A	A	A	A	A	A
Hydrogen Chloride	dry gas	A	A	A	A	A	A	-	-	-	-	-	-	-	-
Hydrogen Peroxide	30%	B	B	A	-	A	A	A	A	-	-	A	B	B	A
Hydrogen Peroxide	10%	A	A	A	B	A	A	A	A	-	-	A	B	B	A
Hydrogen Sulphide		A	A	A	A	A	A	A	A	A	A	C	B	A	A
Hydroquinone		A	A	A	A	A	A	A	A	-	C	A	-	-	-
Hypochlorous Acid	conc.	A	A	A	A	A	A	A	A	-	-	A	-	A	A
Inks#		A	A	A	A	A	A	A	A	-	-	A	C	A	A
Iodine+	in kl sol'n	B	-	-	-	B	C	C	C	B	C	A	C	C	B
Isopropyl Alcohol	100%	-	-	A	A	A	A	A	A	-	A	A	A	A	A
Lead Acetate	sat'd.	A	A	A	A	A	A	A	A	A	A	A	A	A	A
Lead Nitrate		A	A	-	-	A	A	A	A	A	A	A	A	A	A
Lactic Acid*	20%	A	A	A	A	A	A	A	A	A	A	A	B	B	B
Linseed Oil*	100%	B	C	A	A	A	C	A	A		A	A	A	A	A
Magnesium Carbonate	sat'd.	A	A	A	A	A	A	A	A	A	A	A	A	A	A
Magnesium Chloride	sat'd.	A	A	A	A	A	A	A	A	A	A	A	A	A	A
Magnesium Hydroxide	sat'd.	A	A	A	A	A	A	A	A	A	A	A	A	A	A
Magnesium Nitrate	sat'd.	A	A	A	A	A	A	A	A	A	A	A	A	A	A
Magnesium Sulphate	sat'd.	A	A	A	A	A	A	A	A	A	A	A	A	A	A
Mercuric Chloride	40%	A	A	A	A	A	A	A	A	A	A	A	C	A	C
Mercuric Cyanide	sat'd.	A	A	A	A	A	A	B	A		A	A	C	A	
Mercury		A	A	A	A	A	A	B	A	A	A	A	A	A	A
Methyl Alcohol*	100%	A	A	A	A	A	A	A	A	B	B	C	A	A	C
Methylethyl Ketone*#	100%	B	C	A	B	B	C	C	C	A	C	C	A	A	A
Methylene Chloride*#	100%	C	C	B		C	C	C	C	C	C	C	A	A	B
Milk		A	A	A	A	C	C	A	A	A	A	A	A	A	A
Mineral Oils#		B	C	A	B	A	C	A	A	A	A	A	A	A	A
Molasses		A	A	A	A	A	A	A	A	C	A	A	A	A	A
Naptha*#		B	C			B	C	A	A	C	C	A	A	A	A

Naphthalene*#		B		A	A	C	C	C	C	C	C	A	A	A	A
Nickel Chloride	conc.	A	A	A	A	A	A	A	A	A	A	A	C	A	B
Nickel Nitrate	sat'd.	A	A	A	A	A	A	A	A	A	A	A	B	B	B
Nickel Sulphate	conc.	A	A	A	A	A	A	A	A	A	A	A	B	B	B
Nicotine*	dilute	A	A	A	A	A	A	A	A						
Nitric Acid	0-30%	A	A	C	C	A	A	A	A	B	A	A	A	A	A
Nitric Acid+	30-50%	A	B	C	C	A	B	B	B	B	A	A	A	A	A
Nitric Acid+	70%	A	B	C	C	A	B	C	C	C	A	A	A	A	A
Nitric Acid+	95-98%	C	C	C	C	C	C	C	C	C		A	A	A	A
Nitrobenzene*#	100%	C	C	C	C	C	C	C	C	C	C	B	A	A	C
n-Octane		A	A			A	A								
Oleic Acid		B	C	A	B	A	C	C	A	B	C	B	B	C	B
Oxalic Acid*	sat'd.	A	A	A	B	A	A	A	C	A	B	A	B	C	B
Perchloroethylene#		C	C			C	C	C	B	C	C	A	A	A	B
Phosphoric Acid	95%	A	A	A	A	A	B	B	A	B	B	A	B	B	A
Photographic Solutions		A	A	A	A	A	A	A	A	B	A	A	A	A	A
Plating Solutions*															
Brass		A	A	A	A	A	A	A	A	A	A	A	A	A	A
Cadium		A	A	A	A	A	A	A	A	C	C	A	A	C	A
Chromium		A	A	A	A	A	A	A	A		B	A	C	C	C
Copper		A	A	A	A	A	A	A	A		A	A	A	A	A
Gold		A	A	A	A	A	A	A	A		A	A	A	A	A
Indium		A	A	A	A	A	A	A	A		A	A			
Lead		A	A	A	A	A	A	A	A			A	C	C	A
Nickel		A	A	A	A	A	A	A	A			A	C	A	C
Rhodium		A	A	A	A	A	A	A	A			A	A	C	A
Silver		A	A		A	A	A	A	A			A	C	C	A
Tin		A	A	A	A	A	A	A	A			A	C	A	A
Zinc		A	A	A	A	A	A	A	A		A	A	C	A	B
Potassium Bicarbonate	sat'd.	A	A	A	A	A	A	A	A	A	A	A	B	A	B
Potassium Bromide	sat'd.	A	A	A	A	A	A	A	A	A	A	A	B	A	B
Potassium Bromate	10%	A	A	A	A	A	A	A	A	A	A	A	B	A	B
Potassium Carbonate		A	A	A	A	A	A	A	A	A	A	A	B	A	B
Potassium Chlorate	sat'd.	A	A	A	A	A	A	A	A	A	A	A	B	A	B
Potassium Chloride	sat'd.	A	A	A	A	A	A	A	A	A	A	A	B	A	B
Potassium Chromate	40%	A	A	A	A	A	A	A	A	A	A	A	B	A	B
Potassium Cyanide	sat'd.	A	A	A	A	A	A	A	A	A	A	A	B	A	B
Potassium Dichromate	40%	A	A	A	A	A	A	A	A	A	A	A	B	A	B
Potassium Ferri/Ferro Cyanide	sat'd.	A	A	A	A	A	A	A	A	A	A	A	B	A	B
Potassium Fluoride		A	A	A	A	A	A	A	A	A	A	A	B	A	B
Potassium Hydroxide	conc.	A	A	A	A	A	A	A	A	A	B	B	B	A	B
Potassium Nitrate	sat'd.	A	A	A	A	A	A	A	A	A	A	A	B	A	B
Potassium Perborate	sat'd.	A	A	A	A	A	A	A	A	A	A	A	B	A	B
Potassium Perchlorate	10%	A	A	A	A	A	A	A	A	A	A	A	B	A	B
Potassium Permanganate	20%	A	A	A	A	A	A	A	A	A	A	A	B	A	B
Potassium Persulphate	sat'd.	A	A			A	A	A	A	A	A	A	B	A	B

Potassium Sulphate	conc.	A	A	A	A	A	A	A	A	A	C	A	B	A	B				
Potassium Sulphide	conc.	A	A	A	A	A	A	A	A	A	C	A	B	A	B				
Potassium Sulphite	conc.	A	A	A	A	A	A	A	A	A	C	A	B	A	B				
Propargyl Alcohol*		A	A			A	A												
n-Propyl Alcohol*		A	A	A	A	A	A	A			A	A	A	A	A				
Propylene Dichloride*#	100%	C	C	C	C	C	C	A				A	C	A	B				
Propylene Glycol*		A	A			A	A	C			C	A	B	A	B				
Pyridine*		A		A		A	C	C	B	B	C	C	A	B	B				
Resorcinol	sat'd.	A	A			A	A												
Sallcylic Acid	sat'd.	A	A			A	A	A	A	A	A	A	A	A	A				
Sea Water		A	A	A	A	A	A	A	A	A	A	A	A	A	A				
Selenic Acid		A	A			A	A	A	A	A									
Shortening*		A	A	A	A	A	A	A	A	A	A	A	A	A	A				
Silver Nitrate Solution		A	A	A	A	A	A	A	A	A	A	A	A	A	A				
Soap Solution*	any con	A	A	A	A	A	A	A	A	A	A	A	A	A	A				
Sodium Acetate	sat'd.	A	A	A	A	A	A	B	B	A	B	C	B	A	A				
Sodium Benzoate	35%	A	A	A	A	A	A	A	A	A	A	A	A	A	A				
Sodium Biscarbonate	sat'd.	A	A	A	A	A	A	A	A	A	B	C	B	B	B				
Sodium Bisulphate	sat'd.	A	A	A	A	A	A	A	A	A	C	A	B	B	A				
Sodium Bisulphite	sat'd.	A	A	A	A	A	A	A	A	A	A	A	B	B	A				
Sodum Borate		A	A	A	A	A	A	A	A	A	A	A	B	A	A				
Sodium Bromide	dilute	A	A	A	A	A	A	A	A	A	A	A	A	A	A				
Sodium Carbonate	conc.	A	A	A	A	A	A	A	A	A	A	C	A	A	A				
Sodium Chlorate	sat'd.	A	A	A	A	A	A	A	A	A	A	A	B	A	B				
Sodium Chloride	sat'd.	A	A	A	A	A	A	A	A	A	A	A	C	A	A				
Sodium Cyanide		A	A	A	A	A	A	A	A	A	A	A	B	A	A				
Sodium Dichromate	sat'd.	A	A	A	A	A	A	A	A	A	A	A	A	A	A				
Sodium Ferri/Ferro Cyanide	sat'd.	A	A	A	A	A	A	A	A	A	A	A	A	A	A				
Sodium Fluoride	sat'd.	A	A	A	A	A	A	A	A	A	C	A	C	A	A				
Sodium Hydroxide	conc.	A	A	A	A	A	A	A	A	A	B	A	B	B	B				
Sodium Hypochlorite	1	A	A	A	B	B	B	B	B	B	C	A	C	C	B				
Sodium Nitrate		A	A	A	A	A	A	A	A	A	B	A	B	A	B				
Sodium Sulphate		A	A	A	A	A	A	A	A	A	B	A	B	A	B				
Sodium Sulphide	sat'd.	A	A	A	A	A	A	A	A	A	A	A	B	A	B				
Sodium Sulphite	sat'd.	A	A	A	A	A	A	A	A	A	A	A	B	A	B				
Stannic Chloride	sat'd.	A	A	A	A	A	A	A	A	B	C	A	C	A	B				
Stannous Chloride	sat'd.	A	A	A	A	A	A	A	A	A	A	A	A	A	B				
Starch Solution*	sat'd.	A	A	A	A	A	A	A	A	A	A	A	A	A	A				
Stearic Acid*	100%	A	A	A	A	A	A	B	B	B	B	A	A	A	B				
Sulphuric Acid	0-50%	A	A	A	B	A	A	A	A	B	C	A	C	C	B				
Sulphuric Acid +	70%	A	B	A	B	A	B	A	A	B	C	A	C	C	B				
Sulphuric Acid +	80%	A	C	C	C	A	B	A	A	B		A	C	C	B				
Sulphuric Acid +	96%	B	C	C		A	B	C	B	B	C	A	C	C	B				
Sulphuric Acid +	98-conc.	B	C	C		B	C	C	B	B	C	A	C	C	B				
Sulphuric Acid +	fuming	C	C	C	C	C	C	C	B	C	C	A	C	C	C				
Sulphurous Acid		A	A	A	A	A	A	A	A	B	C	A	B	A	B				
Tallow#		A		A	A	A	B					A	A						
Tannic Acid*	sat'd.	A	A	A	A	A	A	A	A	A	B	A	A	A	B				
Tartaric Acid		A	A	A	A	A	A	A	A	B	B	A	C	A	B				
Tetrolydrofuran*#		B	C	C	C	C	C	C	C	B	C	C	A	A	A				
Titanium Tetrachloride*	sat'd.	C				C	C						A						

Toluene*		B	B	C	C	C	C	C	C	C	C	C	A	A	A						
Trichloroethylene*#		C	C	C	C	C	C	C	C	C	C	A	B	A	B						
Triethylene Glycol*		A	A			A	A						A	A	A						
Trisodium Phosphate	sat'd.	A	A	A	A	A	A	A	A	A	A	A	A	A	A						
Turpentine#		C	C	C	C	C	C	B	B	C	C	A	A	B	B						
Urea	30%	A	A	A	A	A	A	B	B				A								
Urine		A	A	A	A	A	A	A	A	A	C	A	A								
Vanilla Extract*		A	A	A	A	A	A														
Vinegar		A	A	A	A	A	A	A	A	A	C	A	A	A	A						
Water		A	A	A	A	A	A	A	A	A	A	A	A	A	A						
Wetting Agent*		A	A	A	A	A	A														
Whiskey*		A	A	A	A	C	C	A	A	A	A	A	A	A	A						
Wines*		A	A	A	A	A	C	C	A	A	A	A	A	A	A						
Xylene#		C	C	C	C	C	C	C	C	C	C	C	A	A	A						
Yeast		A	A	A	A	A	A	A	A	A	A	A	A	A	A						
Zinc Bromide	sat'd.	A	A			A	A	A	A	A	A	A	A	A	A						
Zinc Carbonate	sat'd.	A	A			A	A	A	A	A	A	A	A	A	A						
Zinc Chloride	sat'd.	A	A	A	A	A	A	A	A	A	A	A	A	A	A						
Zinc Oxide	sat'd.	A	A	A	A	A	A	A	A	A	A	A	A	A	A						
Zinc Stearate		A	A			A	A	A	A	A	A	A	A	A	A						
Zinc Sulphate	sat'd.	A	A	A	A	A	A	A	A	A	A	A	A	A	A						

AlltanksCom LLC.

Ask for Art Woods

Email Art at sales@tanksystems.com

Mail: *PO Box 680747 Houston, Texas 77268*

Ship: *32926 Tamina - Magnolia, Texas 77354*

Phones: *800.537.9444*

01/13/2013

INSPECTION CHECKLIST FOR INDUSTRIAL TANKS

Order Number: 342777 SO Number: 142621 Order Qty: 2 Part Number: IC 5300 429 8800

Tank Description: Size 6600 UNIT X: 120 110 HAS 1.5 3in SS Sumo

Specific Gravity _____ Material _____ Serial Number 1301480193

Circle YES or NO or NA Below as Required

Audit: Yes No If yes, attach audit. Correct Audit 600 psi 750 psi Other _____

Hydro test: Yes No Percent Gel test 65% minimum: _____ or N/A

Drop dart: Pass Fail

Sumo Test: Pass Fail NA What psi 45 How long 12 min

IF THIS IS A NO HOLES NO FITTING TANK SKIP SECTIONS A & B. NHNF: Yes

SECTION A - FITTINGS – SPECIFICATION:

Note: Proper application and installation of fittings are critical to the success of an SII tank. Please follow this procedure.

Is the application correct? Circle YES or NO or NA.

- Are we using the correct gaskets per the order? Viton or Epdm
- Is the material correct for encapsulated bolts? Stainless (natural) Hastaloy (yellow) Titanium (green) NA
- Do the pvc fitting U-vents, siphon tubes, etc. have enough glue? (see evidence in the joints) . . Yes No NA

SECTION B - FITTINGS – LOCATION:

- Fitting layout per cut sheet correct? . . . . . Yes No

If no, explain discrepancies _____

Are the hole sizes correct for the fittings? . . . . . Yes No

Are the gasket areas smooth and even thicknesses on the inside of the tank? (no bumps) . . . . . Yes No

Have the fittings been torque to 1/3 compression on the gasket? . . . . . Yes No

If no, explain (hand tight), etc. _____

SECTION C - EXTRA'S – SUPPLEMENTAL HARDWARE: (includes ladders, down tubes, sight gages, additional plumbing, etc.)

The following have been installed and found to fit and function properly.

Level sensor Y or N Settings: Tank height _____ Fluid level _____ Gallons per inch _____

Down pipe Y or N Welds tested with soft mallet Y or N

Other Items

Final Buyoff: Production _____ Quality [illegible]

(I have checked the above mentioned tank and documentation and have found all to be acceptable.)

ALL TANKS
PO #12-986

TANK 1 OF 4

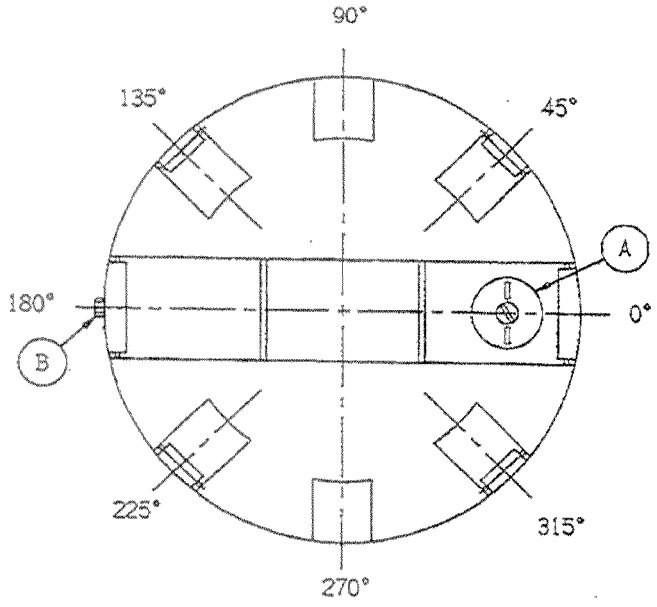

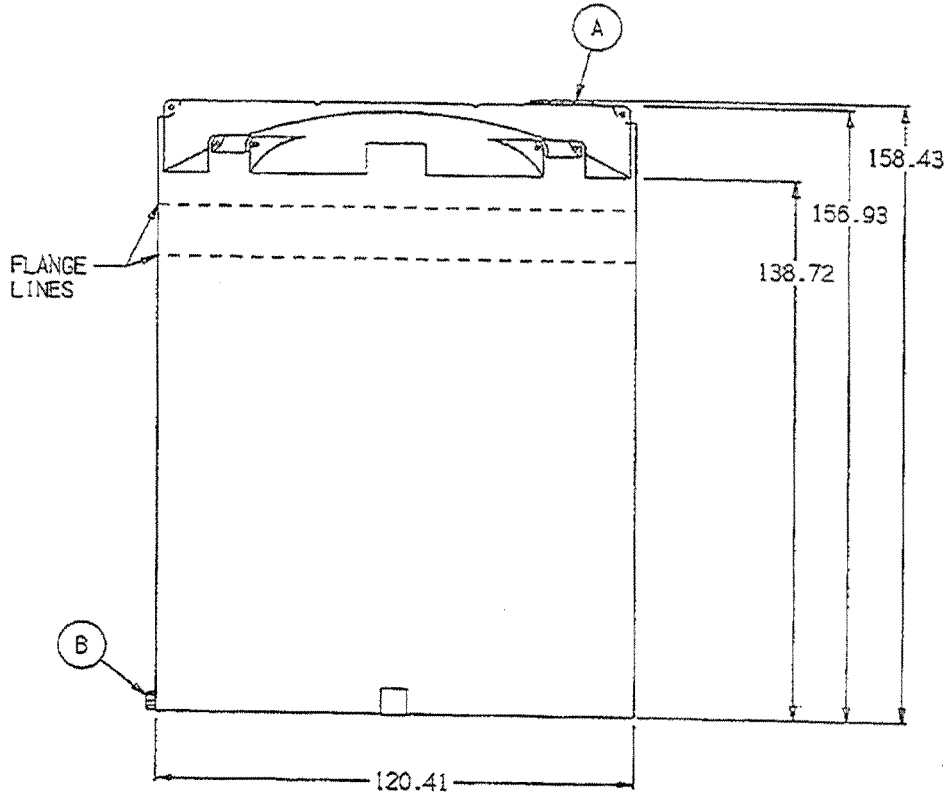

NOTE:
ADEQUATE CLEARANCE MUST BE ALLOWED FOR S.U.M.O. FITTING AND PIPING ACCESSORIES. A NOTCH IN THE TANK SUPPORT PAD MAY BE ADVISABLE.
ALL EXTERNAL PIPING MUST BE INDEPENDENTLY SUPPORTED.

A. 24" PE THREADED-VENTED MANWAY W/20" ACCESS [P/N 34700352]
B. 3" S.U.M.O. W/SS INSERT, VITON O-RINGS & PVC ADAPTER [P/N 34700299]
B. ASM 3" CPVC SUMO ADAPTER [P/N 35900511]

* BASE FITTINGS TO BE LEFT INSTALLED AT TIME OF SHIPMENT PER SII PROCEDURE
* Consult Snyder's Guidelines for Use and Installation prior to delivery. Available on-line at www.snydernet.com

ALL DIMENSIONS, DESIGNS, AND INFORMATION ON THIS PRINT MUST BE CONSIDERED PROPRIETARY TO SNYDER INDUSTRIES, INC. AND MAY NOT BE USED, COPIED, OR DISTRIBUTED WITHOUT WRITTEN PERMISSION OF AN OFFICER [OR HIS AGENT] OF THE FIRM.

APPROVED: 12/2/12
SIGNATURE: _____ DATE: _____
DRAWING NOT VALID UNLESS SIGNED
(all dimensions in inches)

6,600 GALLON FLAT BOTTOM TANK

PART # _____ TANK: 530041IN97401
HDLPE/NATURAL/1.5 SG
REF#: 29880 12/19/12

SNYDER INDUSTRIES INC.

6600 VST H53001000043

12.92	OVER ALL TANK HEIGHT (FEET)	13	DOME HEIGHT (INCHES)
600.00	TENSILE STRENGTH (PSI)	355.54	CAP. IN DOME TOP
11.83	SIDE WALL HEIGTH (FEET)	7180.83	MIN. TANK CAP.(GAL.)
120.00	DIAMETER (INCHES)		CHARGE WEIGHT (LBS.)
1.50	SPECIFIC GRAVITY	_____	OVEN CYCLE TIME (MIN)
0.30	AVG. THICKNESS TOP (INCHES)	_____	OVEN TEMP. (DEG."F")
	BOTTOM THICKNESS (INCHES)	_____	DELAY (MIN.)
	FEET FROM OUT SIDE EDGE	_____	COOLING AIR (MIN.)
0.638675	0.5 ` # 646 645 651 671	_____	COOLING WATER (MIN.)
0.57	1 ` # 630 647 642 656	_____	COOLING AIR (MIN)
0.51	2 ` # 571 503 523 551	_____	OVEN DAMPER
0.51	CENTER	_____	MACHINE/ARM
	# 485	_____	ROTATION

DIST.FROM BOTTOM(FT)	DESIGN WALL	SIDE THICKNESS CUTOUT	7.85	15.71	23.56	(FEET)
29	0.00	# #				
28	0.00	# #				
27	0.00	# #				
26	0.00	# #				
25	0.00	# #				
24	0.00	# #				
23	0.00	# #				
22	0.00	# #				
21	0.00	# #				
20	0.00	# #				
19	0.00	# #				
18	0.00	# #				
17	0.00	# #				
16	0.00	# #				
15	0.00	# #				
14	0.00	# #				
13	0.00	# #				
12	0.00	# #				
11	0.30	# #	685	738	711	764
10	0.30	# #	695	691	662	705
9	0.30	# #	684	675	679	673
8	0.30	# #	652	684	648	637
7	0.31	# #	698	632	715	689
6	0.38	# #	707	705	716	706
5	0.44	# #	693	697	684	704
4	0.51	# #	741	743	726	731
3	0.57	# #	760	766	740	755
2	0.64	# #	789	720	707	793
1	0.70	# #	791	815	880	803
0.5	0.74	# #	948	861	1011	889
			0°	90	180	270

DATE: 1-10-13
SERIAL #: 130148 0193
POWDER TYPE:
INSTRUMENT CALIBRATED TO
CUTOUT:
LOT #:
PART COLOR:
PIGMENT WEIGHT (GRAMS):
GEL %:
DROP DART WEIGHT:
DROP DART HEIGHT:
DROP DART TEMPERATURE:
DROP DART RESULTS:
Q.A. PERSONNEL:
COMMENTS:

tobey wade
STRUCTURAL ENGINEERS

August 7, 2013
Project No. R405-02-13

Ms. Tracy Buono
Facility/Operations Manager
PSC FERNLEY FACILITY
2095 Newlands Drive East
Fernley, NV 89408

RE: CRYSTALLIZER AND HEAT EXCHANGER CERTIFICATION

Dear Ms. Buono:

In accordance with the Fernley Facility Amended Tank Replacement Plan dated December 17, 2012, and Appendix D-6 of the pending July 2012 RCRA Permit, equipment installations are required to be certified by an Independent Registered Professional Engineer (IRPE) prior to being placed into service.

The certification of this equipment is governed by 40 CFR 264.601. The performance standards of 40 CFR 264.601 require that the miscellaneous units be located in areas with adequate secondary containment and shall be designed, constructed, supported and protected in a manner that is protective of human health and the environment.

This report has been prepared to document our evaluation of the existing Crystallizer and Heat Exchanger equipment. This certification addresses the stability of this equipment during normal operating conditions and during seismic events. It also addresses the ability of the foundation system to support this equipment and to resist the static and dynamic loads imposed by the equipment.

This certification does not address the equipment's suitability and compatibility for its proposed use in PSC's facility nor does our certification address the attachment of the crystallizer vessel to its supporting framework or the strength of the heat exchanger structural framework as the framework was designed by its manufacturer.

NEVADA OFFICE
648 LANDER STREET ■ RENO, NEVADA 89509 ■ TEL: (775) 324.7757 ■ FAX: (775) 324.7797

Basis of Analysis

The crystallizer is an elevated spray tower with a cone-bottom. It is supported on steel framing consisting of legs with diagonal bracing. Dimensions, weights and liquid volumes have been provided by PSC.

The heat exchanger was manufactured by Kopetz Manufacturing, Inc. and is a horizontal steel vessel supported on two steel saddles. The details of the heat exchanger fabrication are shown on Drawing L93-132-A, Rev. 1 and dated 4/15/93.

Plans of the existing floor slab construction are not available. The secondary containment system was designed by Frontenac Engineering, Drawing C1.0, copy attached. The validation of the existing floor slab to resist the dynamic loads imposed by the heat exchanger was provided by Frontenac Engineering, copy attached.

Our evaluation of the equipment is based on the requirements of the 2006 International Building Code (IBC) which is the governing building code for this facility. ASCE Standard 7-05 "Minimum Design Loads for Buildings and Other Structures" is incorporated by reference into the IBC.

Findings

According to the IBC and ASCE 7-05, equipment must be stable under normal operating conditions and during seismic events. Based on our evaluation of the crystallizer and heat exchanger, we have formed the following opinions:

- The crystallizer is supported by a reinforced concrete foundation system which is capable of adequately supporting the equipment under normal operating (static) and dynamic (seismic) conditions.
- The crystallizer is stabile against overturning and sliding when subjected to loads based on IBC level seismic events.
- The crystallizer's supporting framework has sufficient strength to transfer the gravity and dynamic loads to the foundations.
- The heat exchanger is stabile against overturning and sliding when subjected to loads based on IBC level seismic events.
- The heat exchanger is situated on a concrete foundation system which is capable of adequately supporting the equipment under normal operating (static) and dynamic (seismic) conditions based on the design analysis performed by Frontenac Engineering.
- The equipment is located in an area with sufficient secondary containment based on containment calculations performed by Frontenac Engineering. Equipment Pro observed the waterstop installation as documented in the attached letter.
- Special Inspection of the concrete slab construction, reinforcing and epoxy dowel installations was performed as required by the International Building Code. Copies of the Special Inspection reports are attached.

Tobey-Wade Consulting designed the crystallizer and heat exchanger anchorage systems, under my direct supervision. Special Inspections were performed by inspectors from Nortech Consultants.

Certification Statement

I certify under penalty of law that this report and all attachments were prepared under my direction and supervision in accordance with a system developed to assure that qualified personnel properly gather and evaluate the information submitted. Based on my inquiry of the person or persons who manage the system or those persons directly responsible for gathering the information, the information, submitted is, to the best of my knowledge and belief, true, accurate, and complete. I am aware that there are significant penalties for submitting false information, including the possibility of fines and imprisonment for knowing violations.

This report has been prepared in accordance with accepted engineering practices and is subject to the assumptions and limitations stated in the report. Also note that this certification covers the aforementioned aspects of the Crystallizer and Heat Exchanger only.

Please feel free to contact me at your convenience should you have any questions relating to our findings.

Sincerely,
TOBEY-WADE CONSULTING

Terrence R. Tobey

TERRENCE R. TOBEY, P.E., S.E.
Principal Structural Engineer

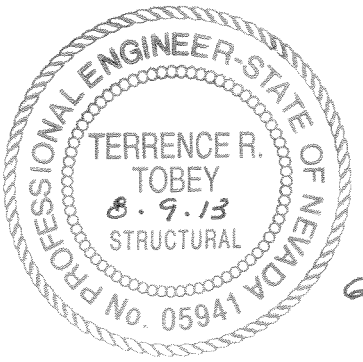

Exp.
6.30.14

FRONTENAC ENGINEERING GROUP, INC.
(314) 644-2200 FAX (314) 644-0645
PITZMAN'S CO. SURVEYORS & ENGINEERS
(314) 781-5665 FAX (314) 781-1801
2725 Sutton Boulevard
St. Louis, Missouri 63143-3007

CLIENT **PSC ENVIRONMENTAL SERVICES, LLC** JOB # **121039**
DESCRIPTION **CRYSTALLIZER & HEAT EXCHANGER MODIFICATION - ADDENDUM #1**
SHEET # **1** OF **1**
CALCULATED BY **JJS** DATE **12 - 27 - 2012**
SCALE **1" = 1' - 0"**

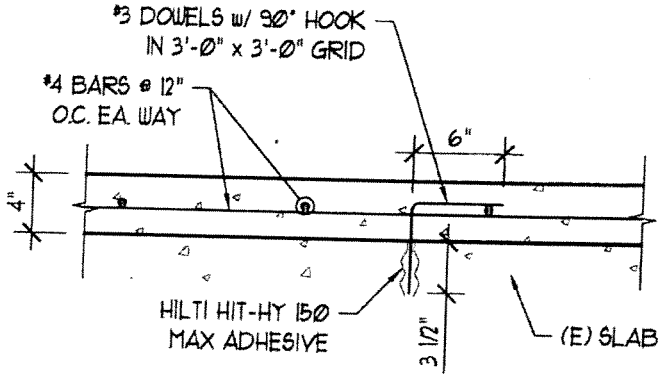

DETAIL OF CONNECTION BETWEEN NEW & EXISTING CONC. SLAB

10 / CS1.0

SCALE: 1"=1'-Ø"

PROFESSIONAL ENGINEER-STATE OF NEVADA
WILLIAM K. BERTHOLD
Exp: 12-31-14
CIVIL
No. 22305

6-11-13

N:\2012\121039 Equipment-Prg - PSC Fernley Nevada\121039 - CS-S10.dwg Plotted Date 12/27/12 3:55 PM

NORTECH Geotechnical/Civil Consultants, Ltd.

FIELD CONSTRUCTION INSPECTION REPORT

PROJECT PSC Enviornmental JOB NO. 14441-28C

LOCATION 2095 Newlands Drive, Fernley, Nevada REPORT NO. 1

CONTRACTOR L & H Concrete WEEK ENDING 01-12-13

Work Description

January 9 - Inspected placement of 16 #4 dowels at existing slab in chrystalizer room for retro tie-in. Contractor drilled holes to proper embed depths and cleaned holes thoroughly with an air compressor and brush. I observed placement of dowels and epoxy. Project was completed in accordance with Engineers detail, sheet 1 dated 12/27/12 and sheet CS1.0 on approved plans. (MEV)

January 10 - Chrystalizer room. On site to inspect fit up for X bracing tube steel to gusset place and gusset plate to pipe steel connections. Contractor has prepared surface area on pipe steel by grinding off coating exposing metal surfaces. All other connections have been prepared in accordance with approved plans and engineers detail. (MEV)

January 11 - Inspected welding of tube steel x bracing to lower gusset plate and lower gusset plate to pipe steel connections at four pier locations in chrystalizer room. All welding has been completed at the bottom connections in accordance with approved plans and AWS specifications. (MEV)

NORTECH Geotechnical/Civil Consultants, Ltd.

FIELD CONSTRUCTION INSPECTION REPORT

PROJECT PSC Environmental JOB NO. 14441-28C

LOCATION 2095 Newlands Drive, Fernley, Nevada REPORT NO. 2

CONTRACTOR L & H Concrete WEEK ENDING 01-19-13

Work Description

January 14 - On site for epoxy inspection on rebar dowel hooks for slab (#3's) and anchor bolts 3/8 inch all threads for crystalizer (XC-plate0, (pump). Epoxy, dowels and anchor bolts were placed in accordance with Engineers structural details on approved plans. I inspected structural reinforcement in footing pedestals for crystalizer. Rebar was placed in accordance with structural details (CS 2.0) on approved plans. I was on site for concrete pour on pedestals. I cast one set of concrete cylinders and I performed one slump test. (MSV)

January 15 - On site for epoxy inspection on slab rebar dowel hooks (#3's). Holes were drilled to specified embed depth (3-1/2") and cleaned out thoroughly. Epoxy and dowels were placed in accordance with structural details from Engineers drawings. I transported previously cast cylinders to the laboratory for testing. (MSV)

January 16 - On site to inspect steel reinforcement in crystalizer slabs. Rebar was placed in accordance with structural details on sheet S1.0 on approved plans. I was on site for concrete pour on slabs. I cast one set of concrete cylinders and I performed one slump test. (MSV)

Inspected welding of tube steel to gusset plate at top connections of brace frame in the crystalizer room. Welding has been completed in accordance with details from approved plans and AWS specifications.

January 18 - On site for concrete pour on slab curb. I cast one set of concrete cylinders and I performed one slump test. (MSV)

NORTECH Geotechnical/Civil Consultants, Ltd.

FIELD CONSTRUCTION INSPECTION REPORT

PROJECT PSC Environmental JOB NO. 14441-28C

LOCATION 2095 Newlands Drive, Fernley, Nevada REPORT NO. 16A

CONTRACTOR L & H Concrete WEEK ENDING 06-29-13

Work Description

June 27 - Inspected placement of 36 half inch epoxy set all-thread anchor bolts at cat-walk base plate to slab connections at tanks 4 & 5 and placement of 32 half inch epoxy set all-thread anchor bolts at base plate to slab connections at tank 7. Contractor has drilled holes to proper embed depths and has thoroughly cleaned holes with air compressor and wire brush. Project was completed in accordance with details from sheets S/TA1.0 + 6/S1.0 on approved plans. I also inspected welding of base plate/continuity plate to tank 7 and drainage flange plate to tank 7, (17 connections). All welding has been completed in accordance with detail 5/TA1.0 on approved plans and AWS specifications. I also inspected the existing welds of the crystalizer tank referred to in Note 1, detail 4/G52.0 of Engineers letter dated 6/26/12. The existing welds are in good condition and have no visible discontinuities and are in accordance with AWS specifications. (MEV)

NORTECH

REPORT OF CONCRETE CYLINDER TEST

Project Number: 14441-28C
Project: PCS
Report Number: 1
Client: Equipment Pro, Inc.
Address: 721 Parkwood Dr., Ste. Genevieve, MO 63670

Attn:

FIELD TEST CONDITIONS AND RESULTS (ASTM C31)

Date Placed: 1/14/2013
Time Sampled: 11:00 AM
Location of Sample: Footing Pedestals
Supplier: 3D
Truck Number: 480
Mix Number: 112012PF
Design Strength: 3000 psi ← 4,000 specified
Time Batched: 10:01 AM
Batch Size: 4 yds.
Slump: 4 in. (ASTM C 143)
Concrete Temp: 64 °F
Water Added: 0 gal.

Ticket Number: 35779

Time Placed: 11:00 AM

Air Content: N/A % (ASTM C 173)
Ambient Temp: 22 °F
Technician: MSV

LABORATORY TEST RESULTS (ASTM C39)

Specimen	Test Date	Age	Load	Diameter	Area	Strength	Percent of Design	Type of Fracture
584	1/21/2013	7	54430	4.00	12.57	4330		1
585	2/11/2013	28		4.00	12.57			
586	2/11/2013	28		4.00	12.57			

Remarks:

Copies to:

TYPES OF FRACTURE

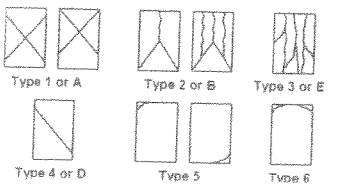

Reported by: Kent Seegmiller
Concrete Laboratory Manager

NORTECH
GEOTECHNICAL/CIVIL CONSULTANTS, LTD. 300 Western Road, #3, Reno, NV 89506 (775) 852-7475 FAX (775) 852-7488

REPORT OF CONCRETE CYLINDER TEST

Project Number: 14441-28C
Report Number: 2
Project: PSC Environmental
Client: Equipment Pro, Inc.
Address: 721 Parkwood Dr., Ste. Genevieve, MO 63670

Attn:

FIELD TEST CONDITIONS AND RESULTS (ASTM C31)

Date Placed: 1/16/2013
Time Sampled: 10:10 AM
Location of Sample: Slab
Supplier: 3D
Truck Number: 481
Ticket Number: 35856
Mix Number: 1126RP
Design Strength: 4000 psi
Time Batched: 9:29 AM
Time Placed: 10:10 AM
Batch Size: 11.5 yds.
Slump: 4 in. (ASTM C 143)
Air Content: N/A % (ASTM C 173)
Concrete Temp: 67 °F
Ambient Temp: 22 °F
Water Added: 0 gal.
Technician: MSV

LABORATORY TEST RESULTS (ASTM C39)

Specimen	Test Date	Age	Load	Diameter	Area	Strength	Percent of Design	Type of Fracture
587	1/23/2013	7	45470	4.00	12.57	3620		1
588	2/13/2013	28	78380	4.00	12.57	6240	156%	1
589	2/13/2013	28	78250	4.00	12.57	6230	156%	1
590	2/4/2013	19	72800	4.00	12.57	5790		1

Remarks:

Copies to:

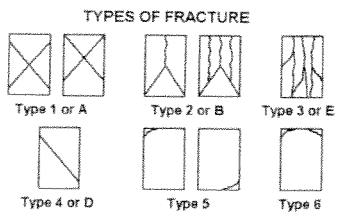

Reported by:
Kent Seegmiller
Concrete Laboratory Manager

NORTECH
GEOTECHNICAL/CIVIL CONSULTANTS, LTD. 300 Western Road, #3, Reno, NV 89506 · (775) 852-7475 FAX (775) 852-7488

REPORT OF CONCRETE CYLINDER TEST

Project Number: 14441-28C
Report Number: 3
Project: PSC Environmental
Client: Equipment Pro, Inc.
Address: 721 Parkwood Dr., Ste. Genevieve, MO 63670

Attn:

FIELD TEST CONDITIONS AND RESULTS (ASTM C31)

Date Placed: 1/18/2013
Time Sampled: 8:55 AM
Location of Sample: Curb, around slab, Crystalizer room
Supplier: 3D
Truck Number: 482
Ticket Number: 35977
Mix Number: 1126RP
Design Strength: 4000 psi
Time Batched: 7:41 AM
Time Placed: 8:55 AM
Batch Size: 2 yds.
Slump: 5 in. (ASTM C 143)
Air Content: N/A % (ASTM C 173)
Concrete Temp: 62 °F
Ambient Temp:
Water Added: 0 gal.
Technician: MSV

LABORATORY TEST RESULTS (ASTM C39)

Specimen	Test Date	Age	Load	Diameter	Area	Strength	Percent of Design	Type of Fracture
598	1/25/2013	7	61250	4.00	12.57	4870		1
599	2/15/2013	28	84130	4.00	12.57	6690	167%	1
600	2/15/2013	28	81700	4.00	12.57	6500	163%	1
601		0		4.00	12.57			

Remarks:

TYPES OF FRACTURE

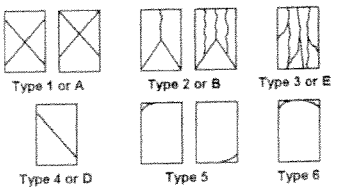

Copies to:

Reported by:
Kent Seegmiller
Concrete Laboratory Manager

EQUIPMENT PRO INCORPORATED

Terrence

I am being told you need a structural observation of the waterstop installation. I wanted to let you know I observed the waterstop installation and that it was in conformance with the plans and specifications.

Thanks

Jim Dailey

721 Parkwood Dr.
Ste. Genevieve, MO 63670

24 Hour Service
Phone: 573-883-2373
888-376-8449
Fax: 573-883-2521
www.equipmentproinc.com

FRONTENAC ENGINEERING

CIVIL STRUCTURAL LAND SURVEYING

PSC Environmental Services, LLC
Fernley, Lyon County, Nevada

Structural Calculations
For
Heat Exchanger Anchorage and Foundation

Design Code: 2009 IBC

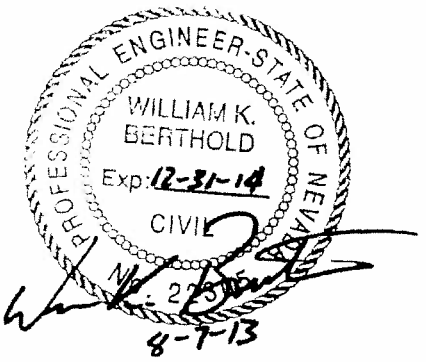

Prepared for:

Mr. Jim Dailey
Equipment Pro Incorporated
721 Parkwood Drive
Ste. Genevieve, MO 63670

August 7, 2013

FEG Project Number: 121039

Frontenac Engineering Group
2725 Sutton Boulevard
Saint Louis, Missouri 63143
314-644-2200 Fax 314-644-0645

JOB 121039 PSC HEAT EXCHANGE
SHEET NO _____ OF _____
CALCULATED BY [illegible] DATE 7/26/13
CHECKED BY _____ DATE _____
SCALE _____

ESTIMATE TENSION LOAD ON ANCHOR BOLT

LOADS ON BASE 2

$P = 4700\,lb$

$V = 1{,}165\,lb$ (CASE)

$M = 4700$ [illegible] (CASE)

$V_u = 1165/.7 = 1664\,lb$

$M_u = 4700/.7 = 6800\,lb$

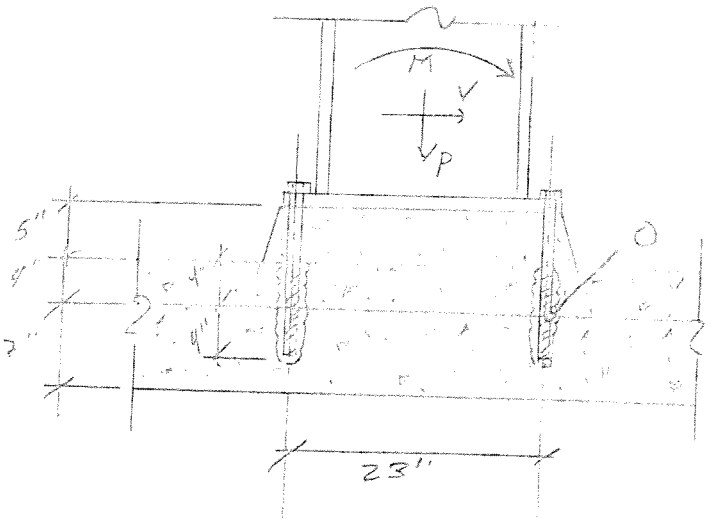

DETERMINE MAX TENSION ON BOLT

$\Sigma M_o = 0$

$6800\,ft\cdot lb \times 12''/ft + 1664\,lb \times 9'' = 0.9 \times 4700\,lb \times 11.5'' + T_u \times 23''$

$96576\,in\cdot lb = 48645\,in\cdot lb + T_u \times 23''$

$T_u = 2083\,lb$

Frontenac Engineering Group
2725 Sutton Boulevard
Saint Louis, Missouri 63143
314-644-2200 Fax 314-644-0645

JOB 121039 PSC HEAT EXCHANGE
SHEET NO. 2 OF 9
CALCULATED BY [illegible] DATE 7/26/13
CHECKED BY _____ DATE _____
SCALE _____

[illegible]

$T_u = 2{,}123\ lb$

$N_b = 17\sqrt{[illegible]}$ [illegible]

$N_b = 7450\ lb$

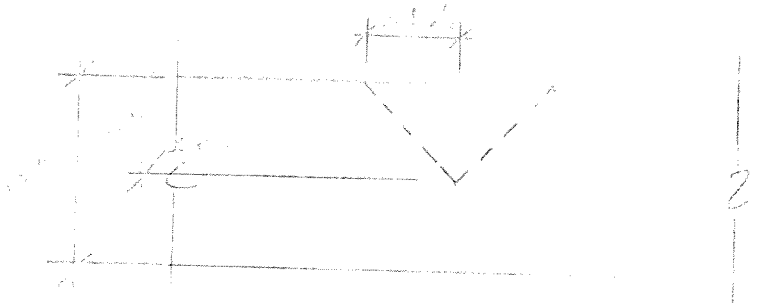

[illegible]

$A_{Nc} = A_{Nco}$

[illegible]

$\psi_{ed,N} = 1.0$

$\psi_{cp,N} = 1.0$

$N_{cb} = 7450\ lb$

$\phi N_{cb} = 0.45 \times 7450$

$\phi N_{cb} = 3350\ lb > T_u$ ok

$N_a = \frac{A_{Na}}{A_{Nao}} \psi_{ed,Na} \psi_{cp,Na} N_{ba}$

$A_{Na} = A_{Nao}$

$\psi_{ed,N} = 1.0$

[illegible]

$N_{ba} = T_{cr} \pi d_a h_{ef}$

$= 300psi \times 3.14 \times 1'' \times 4''$

$N_{ba} = 3768\ lb$

$\phi N_{ba} = 0.55 \times 3768 = 2{,}070 \approx T_u$ ok

FRONTENAC ENGINEERNIG GROUP, INC.
2725 Sutton Boulevard
St. Louis, Missouri 63143
Phone: (314) 644-2200
Fax (314) 644-0645

JOB	FEG Job No 121039 PSC Fernley Heat Exchanger Foundation		
SHEET NO	3	OF	6
CALCULATED BY	JJS	DATE	7/26/2013
CHECKED BY	WKB	DATE	7/26/13
SCALE			

COMBINED FOOTING ANALYSIS AND DESIGN (ACI318-08)

TEDDS calculation version 2.0.03.04

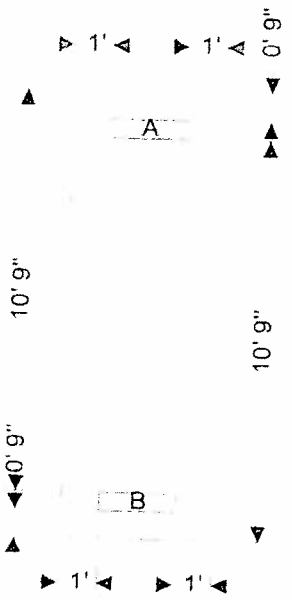

Combined footing details

Length of combined footing $L = 4.000$ ft
Width of combined footing $B = 12.000$ ft
Depth of combined footing $h = 7.000$ in
Depth of soil over footing $h_{soil} = 4.000$ in
Density of concrete $\rho_{conc} = 150.0$ lb/ft^3

Column details

	Column A	Column B
Column base length	$l_A = 24.000$ in	$l_B = 24.000$ in
Column base width	$b_A = 6.000$ in	$b_B = 6.000$ in
Column eccentricity in x	$e_{PxA} = 0.000$ in	$e_{PxB} = 0.000$ in
Column eccentricity in y	$e_{PyA} = 60.000$ in	$e_{PyB} = -60.000$ in

Soil details

Depth of soil over footing $h_{soil} = 4.000$ in
Density of soil $\rho_{soil} = 150.0$ lb/ft^3
Allowable bearing pressure $P_{bearing} = 2.000$ ksf

Axial loading on columns

	Column A	Column B
Dead axial load	$P_{GA} = 4.700$ kips	$P_{GB} = 4.700$ kips
Live axial load	$P_{QA} = 0.000$ kips	$P_{QB} = 0.000$ kips
Wind axial load	$P_{WA} = 0.000$ kips	$P_{WB} = 0.000$ kips
Total axial load	$P_A = 4.700$ kips	$P_B = 4.700$ kips

Foundation loads

Dead surcharge load $F_{Gsur} = 0.000$ ksf
Live surcharge load $F_{Qsur} = 0.000$ ksf
Footing self weight $F_{swt} = 0.087$ ksf

FRONTENAC ENGINEERNIG GROUP, INC.
2725 Sutton Boulevard
St. Louis, Missouri 63143
Phone: (314) 644-2200
Fax: (314) 644-0645

JOB FEG Job No. 121039 PSC Fernley Heat Exchanger Foundation
SHEET NO 6 OF 9
CALCULATED BY JJS DATE 7/26/2013
CHECKED BY WKB DATE 7/26/13
SCALE

Soil self weight F_{soil} = 0.050 ksf

Total foundation load F = 6.600 kips

Horizontal loading

	Column A	Column B
Dead load in x direction	H_{GxA} = 0.000 kips	H_{GxB} = 0.000 kips
Live load in x direction	H_{QxA} = 0.000 kips	H_{QxB} = 0.000 kips
Wind load in x direction	H_{WxA} = 1.165 kips	H_{WxB} = 1.200 kips
Total load in x direction	H_{xA} = 1.165 kips	H_{xB} = 1.200 kips
Dead load in y direction	H_{GyA} = 0.000 kips	H_{GyB} = 0.000 kips
Live load in y direction	H_{QyA} = 0.000 kips	H_{QyB} = 0.000 kips
Wind load in y direction	H_{WyA} = 0.000 kips	H_{WyB} = 0.000 kips
Total load in y direction	H_{yA} = 0.000 kips	H_{yB} = 0.000 kips

Moment on column bases

	Column A	Column B
Dead moment in x direction	M_{GxA} = 0.000 kip_ft	M_{GxB} = 0.000 kip_ft
Live moment in x direction	M_{QxA} = 0.000 kip_ft	M_{QxB} = 0.000 kip_ft
Wind moment in x direction	M_{WxA} = 5.600 kip_ft	M_{WxB} = 5.600 kip_ft
Total moment in x direction	M_{xA} = 5.600 kip_ft	M_{xB} = 5.600 kip_ft
Dead moment in y direction	M_{GyA} = 0.000 kip_ft	M_{GyB} = 0.000 kip_ft
Live moment in y direction	M_{QyA} = 0.000 kip_ft	M_{QyB} = 0.000 kip_ft
Wind moment in y direction	M_{WyA} = 0.000 kip_ft	M_{WyB} = 0.000 kip_ft
Total moment in y direction	M_{yA} = 0.000 kip_ft	M_{yB} = 0.000 kip_ft

Check stability against sliding

Passive pressure coefficient K_p = 2.464

Stability against sliding in x direction

Total sliding resistance in x dir H_{xres} = 7.220 kips

PASS - Resistance to sliding is greater than horizontal load in x direction

Check stability against overturning in x direction

Total overturning moment M_{xOT} = 12.580 kip_ft

Total restoring moment M_{xres} = 32.000 kip_ft

PASS - Restoring moment is greater than overturning moment in x direction

Calculate base reaction

Total base reaction T = 16.0 kips

Base reaction eccentricity in x e_{Tx} = 9.435 in

Base reaction eccentricity in y e_{Ty} = 0.000 in

Base reaction acts outside of middle third of base

Calculate base pressures

q_1 = 0.000 ksf q_2 = 0.000 ksf q_3 = 0.732 ksf q_4 = 0.732 ksf

Minimum base pressure q_{min} = 0.000 ksf

Maximum base pressure q_{max} = 0.732 ksf

PASS - Maximum base pressure is less than allowable bearing pressure

FRONTENAC ENGINEERNIG GROUP, INC.
2725 Sutton Boulevard
St Louis, Missouri 63143
Phone: (314) 644-2200
Fax: (314) 644-0645

JOB	FEG Job No 121039 PSC Fernley Heat Exchanger Foundation		
SHEET NO		OF	
CALCULATED BY	JJS	DATE	7/26/2013
CHECKED BY	WKB	DATE	7/26/13
SCALE			

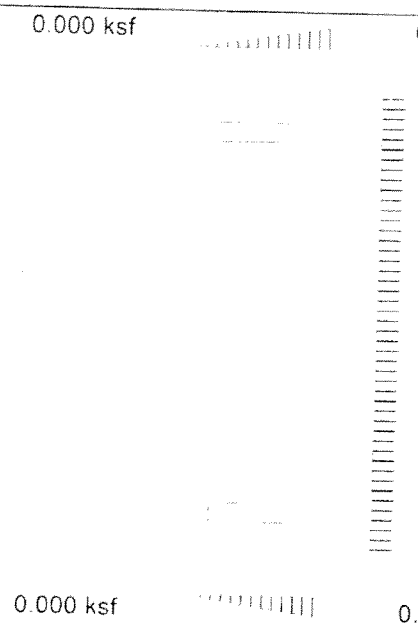

Load combination factors for loads

Dead loads γ_{fG} = 0.90
Wind loads γ_{fW} = 1.60
Live loads γ_{fQ} = 0.00

Strength reduction factors

Flexural strength reduction ϕ_f = 0.90
Shear strength reduction ϕ_s = 0.75

Ultimate axial loading

Column A
Ultimate axial load on column P_{uA} = 4.230 kips
Column B
P_{uB} = 4.230 kips

Ultimate foundation loads

Ultimate foundation load F_u = 5.940 kips

Ultimate horizontal loading

Column A
Ult.horizontal load in x dir H_{xuA} = 1.864 kips
Ult.horizontal load in y dir H_{yuA} = 0.000 kips
Column B
H_{xuB} = 1.920 kips
H_{yuB} = 0.000 kips

Ultimate moment

Column A
Ult.moment on column in x dir M_{xuA} = 8.960 kip_ft
Ult.moment on column in y dir M_{yuA} = 0.000 kip_ft
Column B
M_{xuB} = 8.960 kip_ft
M_{yuB} = 0.000 kip_ft

Ultimate base reaction

Ultimate base reaction T_u = 14.400 kips
Ecc.of ult.base reaction in x e_{Txu} = 16.773 in
Ecc.of ult.base reaction in y e_{Tyu} = 0.000 in

Calculate ultimate base pressures

q_{1u} = 0.000 ksf
q_{2u} = 0.000 ksf
q_{3u} = 1.328 ksf
q_{4u} = 1.328 ksf
Minimum ult.base pressure q_{minu} = 0.000 ksf
Maximum ult.base pressure q_{maxu} = 1.328 ksf

FRONTENAC ENGINEERNIG GROUP, INC.
2725 Sutton Boulevard
St Louis, Missouri 63143
Phone: (314) 644-2200
Fax (314) 644-0645

JOB	FEG Job No 121039 PSC Ferriley Heat Exchanger Foundation		
SHEET NO	6	OF	9
CALCULATED BY	JJS	DATE	7/26/2013
CHECKED BY	WKB	DATE	7/26/13
SCALE			

Ultimate moments

Ultimate moment in x dir M_x = 7.110 kip_ft

Ultimate moment in y dir M_y = 1.081 kip_ft

Material details

Comp.strength of concrete f'_c = 4000 psi

Yield strength of reinforcement f_y = 60000 psi

Cover to reinforcement c_{nom} = 3.250 in

Concrete type Normal weight

Concrete modification factor λ = 1.00

Moment design in x direction

Tens.reinforcement provided 12 No. 4 bars btm

Area of tens.reinforcement $A_{s\_xB\_prov}$ = 2.356 in²

Minimum tens.reinforcement $A_{s\_x\_min}$ = 1.814 in²

PASS - Tension reinforcement provided exceeds minimum tension reinforcement required

Strain in reinforcement ε_{t_x} = 0.02791

PASS - The section has adequate ductility (cl. 10.3.5)

Nominal moment strength M_{nx} = 7.900 kip_ft

Moment capacity of base M_{capx} = 39.533 kip_ft

PASS - Moment capacity of base exceeds nominal moment strength required

Moment design in y direction

Tens.reinforcement provided 4 No. 4 bars btm

Area of tens.reinforcement $A_{s\_yB\_prov}$ = 0.785 in²

Minimum tens.reinforcement $A_{s\_y\_min}$ = 0.605 in²

PASS - Tension reinforcement provided exceeds minimum tension reinforcement required

Strain in reinforcement ε_{t_y} = 0.02349

PASS - The section has adequate ductility (cl. 10.3.5)

Nominal moment strength M_{ny} = 1.201 kip_ft

Moment capacity of base M_{capy} = 11.214 kip_ft

PASS - Moment capacity of base exceeds nominal moment strength required

Calculate ultimate shear force at d from face of column

Ult.pressure for shear q_{su} = 0.664 ksf

Area loaded for shear A_s = 38.234 ft²

Ult.shear force V_{su} = 16.432 kips

Shear design at distance d from face of column

Nominal shear strength V_{nsu} = 21.909 kips

Concrete shear strength V_{c_s} = 18.215 kips

V_{nsu} > V_{c_s} - Shear reinforcement is required

Shear reinforcement

Shear reinforcement no 4

Shear reinforcement dia ϕ_{sv} = 0.500 in

Spacing perp to column face s_{v_perp} = 12.000 in

Spacing parallel to column face s_{v_par} = 12.000 in

Shear links required A_{v_req} = 0.120 in²/ft²

Area of shear links provided A_{sv_prov} = 0.196 in²/ft²

PASS - Area of shear links provided exceeds area of shear links required

Calculate ultimate punching shear force at perimeter of d / 2 from face of column A

Ult.press.for punching shear q_{puA} = -0.142 ksf

Avg.effective reinf.depth d = 3.250 in

Area loaded A_{pA} = 5.542 ft²

Length of shear perimeter u_{pA} = 4.000 ft

Ult.punching shear force V_{puA} = 5.703 kips

Punching shear stresses at perimeter of d / 2 from face of column A

Nominal shear strength V_{npuA} = 7.604 kips

Concrete shear strength V_{c_p} = 29.599 kips

PASS - Nominal shear strength is less than concrete shear strength

FRONTENAC ENGINEERNIG GROUP, INC.
2725 Sutton Boulevard
St Louis, Missouri 63143
Phone: (314) 644-2200
Fax (314) 644-0645

JOB	FEG Job No 121039 PSC Fernley Heat Exchanger Foundation		
SHEET NO	7	OF	7
CALCULATED BY	JJS	DATE	7/26/2013
CHECKED BY	WKB	DATE	7/26/13
SCALE			

Calculate ultimate punching shear force at perimeter of d / 2 from face of column B

Ult.press.for punching shear q_{puB} = **-0.142** ksf
Area loaded A_{pB} = **5.542** ft²
Ult.punching shear force V_{puB} = **5.703** kips
Avg.effective reinf.depth d = **3.250** in
Length of shear perimeter u_{pB} = **4.000** ft

Punching shear stresses at perimeter of d / 2 from face of column B

Nominal shear strength V_{nruB} = **7.604** kips
Concrete shear strength V_{c_c} = **29.599** kips

PASS - Nominal shear strength is less than concrete shear strength

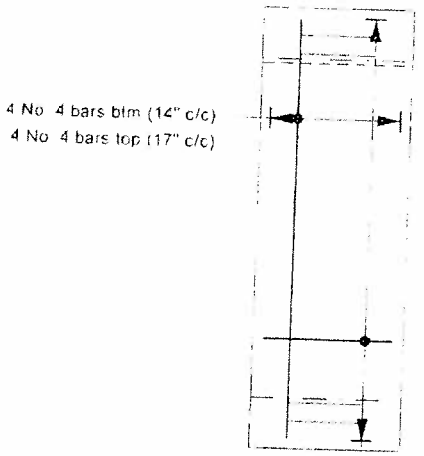

Frontenac Engineering Group
2725 Sutton Boulevard
Saint Louis, Missouri 63143
314-644-2200 Fax 314-644-0645

JOB 121039 PSC HEAT EXCHANGE
SHEET NO 8 OF [illegible]
CALCULATED BY [illegible] DATE [illegible]
CHECKED BY _____ DATE _____
SCALE _____

DETERMINE NOMINAL MOMENT [illegible]
OF 7" UNREINFORCED [illegible]

[illegible]

12 [illegible]

[illegible]

3500 [illegible] *

[illegible] 45 K-ft/ft

$\phi V_n = 0.6 \times 4/3 \times \sqrt{f'_c} \times b_w \times h$

$= 0.6 \times 4/3 \times \sqrt{3500} \times [illegible]$

$\phi V_n = 3976$ [illegible] [illegible]

$\phi V_n = .6\left[\frac{4}{3} + \frac{8}{3.5}\right]\sqrt{f'_c}\, b_o h$

$\beta = 24/6 = 4$

$\phi V_n = .6\left[\frac{4}{3} + \frac{8}{12}\right]\sqrt{3500} \times 7 \times b_o$

$\phi V_n = 497$ lb/in (TWO-WAY ACTION)

* ACTUAL COMPRESSIVE STRENGTH [illegible] BUT, BASED ON OUR EXPERIENCE 3500 psi IS AN ACCEPTABLE ASSUMPTION FOR AGED CONCRETE

Frontenac Engineering Group
2725 Sutton Boulevard
Saint Louis, Missouri 63143
314-644-2200 Fax 314-644-0645

JOB 12103? PSC HEAT EXCHANGER

SHEET NO _____ OF _____

CALCULATED BY [illegible] DATE 8/15/13

CHECKED BY _____ DATE _____

SCALE _____

[illegible] FORCES TO NOMINAL [illegible]

$M_{ux} = 7110$ lb·ft/[illegible]

$M_{ux} = 661$ ft·lb/ft $< \phi M_{nx} = 1{,}450$ ft·lb/ft OK

$M_{uy} = 1061/4 = 2[illegible]$ ft·lb/ft $< \phi M_{ny} = 1450$ ft·lb/ft OK

$(V_u)_{[illegible]} = 16432$ k/4' $= 4108$ k/ft $\approx \phi V_n = 3[illegible]$ k/ft OK

$(V_u)_{[illegible]} = 5703$ [illegible]/48' $= 1[illegible]$ [illegible] $\approx$ [illegible] OK

tobeywade
STRUCTURAL ENGINEERS

September 29, 2010
Project No. R115-07-08

Mr. Aubry Burgess
PSC ENVIRONMENTAL SERVICES, LLC
2095 Newlands Drive East
Fernley, NV 89408

RE: TRUCK BAY AND STORAGE BAY PIPING SYSTEMS
TANK DISCHARGE LINE CERTIFICATION

Dear Mr. Burgess:

In accordance with the Fernley Facility Amended Tank Replacement Plan dated March 25, 2008 and with 40 CFR 264.192, the Receiving Bay and Tank Storage Bay piping systems are required to be certified by Independent Registered Professional Engineers (IRPE's) prior to being placed into service. This report has been prepared to document our evaluations of the Tank Discharge Lines for Tanks S101 through S111 and S201 through S208.

Basis of Analysis

In general, the Amended Tank Replacement Plan and the applicable sections of 40 CFR 264.192 require that the piping systems are to be located in areas with adequate secondary containment, shall have sufficient structural support and shall be tested for tightness prior to being placed into service.

Our evaluations are based on specific piping layouts and information provided by PSC and on details of construction as contained in the original construction drawings as prepared by SEA, Inc. and dated November 1985.

This certification does not include the piping system's suitability and compatibility for its proposed use in PSC's facility as those issues have been addressed by others.

Findings

The Tank Discharge Lines run from the individual tanks in the Storage Bay to the pump stations also located in the Storage Bay. The Discharge Lines are supported by fabricated assemblies anchored to the concrete mat foundation/floor slab. Our evaluation of the Tank Discharge Lines is based on the requirements of the 2006 International Building Code (IBC) which is the governing building code for this facility. ASCE Standard 7-05 "Minimum Design Loads for Buildings and Other Structures" is incorporated by reference into the IBC.

ENTERED 10/20/10

329 FLINT STREET ■ RENO, NEVADA 89501 ■ TEL: (775) 324.7757 ■ FAX: (775) 324.7797

According to the IBC and ASCE 7-05, piping systems must be stable under normal operating conditions and during seismic events.

Based on our evaluation of the aforementioned Tank Discharge Lines relative to IBC requirements, we have formed the following opinions:

1. The Tank Discharge Lines are located in areas of sufficient secondary containment.

2. The Tank Discharge Lines are installed on a reinforced concrete mat foundation of sufficient strength to support the loads imposed by the discharge lines during normal operating conditions and during code-level seismic events. Structural Observation of the support and anchorage system has been performed.

3. The Tank Discharge Lines were tested for tightness as documented in the attached Pressure Testing Inspection Forms. These lines are watertight.

Certification Statement

I certify under penalty of law that this report and all attachments were prepared under my direction and supervision in accordance with a system developed to assure that qualified personnel properly gather and evaluate the information submitted. Based on my inquiry of the person or persons who manage the system or those persons directly responsible for gathering the information, the information submitted is, to the best of my knowledge and belief, true, accurate, and complete. I am aware that there are significant penalties for submitting false information, including the possibility of fines and imprisonment for knowing violations.

This report has been prepared in accordance with acceptable engineering practices and is subject to the assumptions and limitations stated in the report. Also note that this certification covers the aforementioned aspects of the Tank Discharge Lines only.

Please feel free to contact me at your convenience should you have any questions relating to our findings.

Sincerely,
TOBEY-WADE CONSULTING

Terrence R. Tobey

Terrence R. Tobey, P.E., S.E.
Principal Structural Engineer

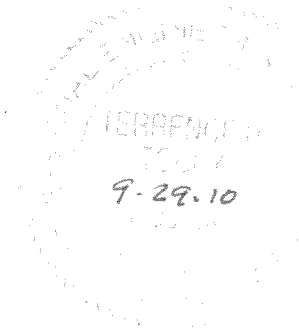

Exp.
6-30-12

ENTERED 10/20/10

tobeywade
STRUCTURAL ENGINEERS

FIELD REPORT

PROJECT: PHILLIPS SERVICE CORPS
FERNLEY FACILITY

LOCATION: FERNLEY, NV

DATE: SEPTEMBER 23, 2010

TIME: 9:00 AM

PRESENT AT SITE: BRANDON ELLIS; TW
FRANK; PSC

This morning I made a site visit. The discharge lines support and anchorage systems were inspected. The discharge lines, supports, and anchorage appear to be per plans. The fiberglass post bases were approximately 6'-0" apart (maximum). There were 2 anchors per post base that were 1/2" diameter in size. A pipe clamp was attached to each post base and the pipe was attached to the system using the pipe clamps. See sheets 1 and 2 of the Storage Bay Tank Discharge Line for the layout of the system and details.

QUALIFICATIONS:

1. The site visit has been performed to observe **only general conformance** with the project construction documents.
2. The site visit has been a visual observation only.
3. Each and every structural element and component indicated on the construction documents was not observed.
4. Dimensions of structural elements were not verified.

ENTERED 10/20/10

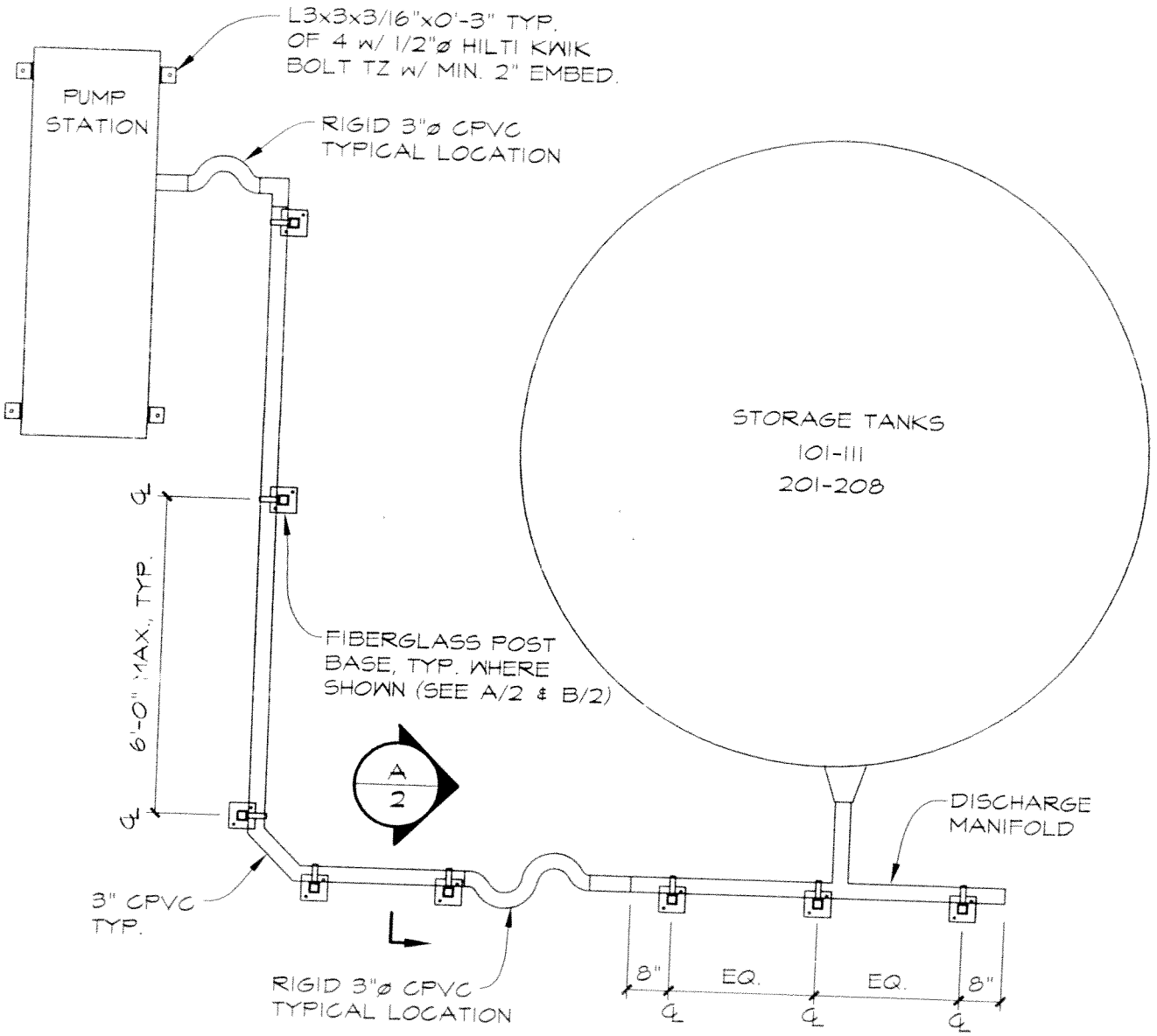

PIPING BETWEEN PUMP STATION AND STORAGE TANKS

N.T.S.

tobey wade
CONSULTING
329 Flint Street
Reno, Nevada 89501
Tel. (775) 324-7757 Fax (775) 324-7797

STORAGE BAY
TANK DISCHARGE LINE
PREPARED FOR
PSC ENVIRONMENTAL SERVICES, LLC.
FERNLEY, NEVADA

Project No.
R115-07-08

1

Date: April 6, 2010

ENTERED 10/20/10

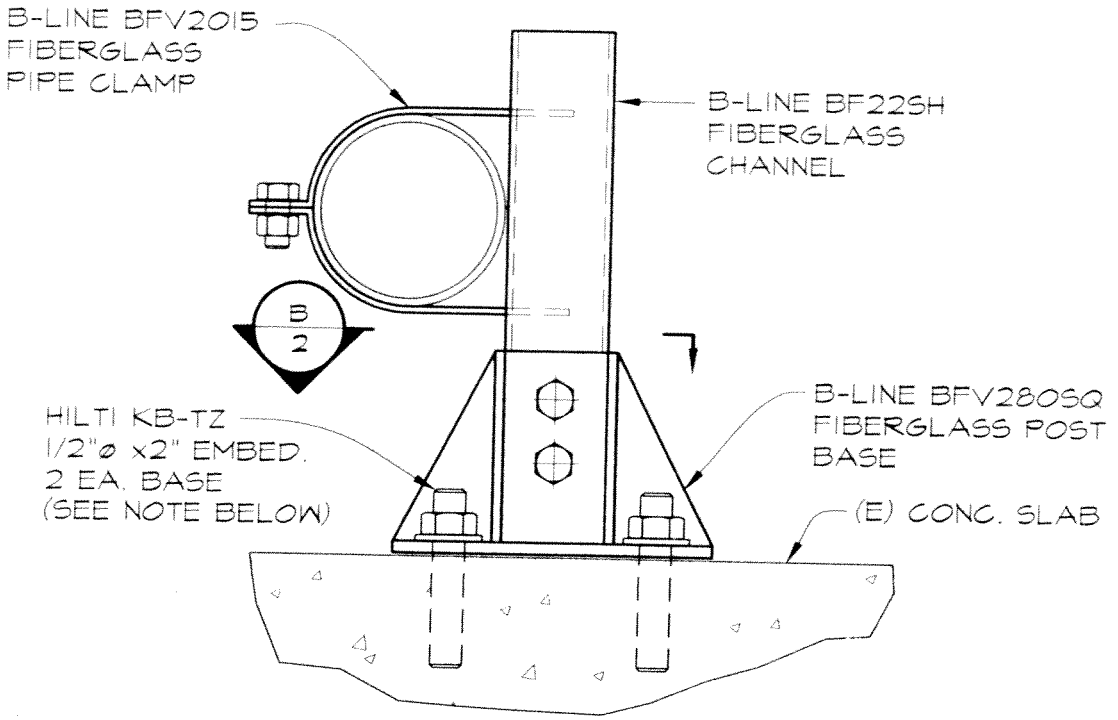

A – FLOOR SUPPORT PIPE SYSTEM

N.T.S.

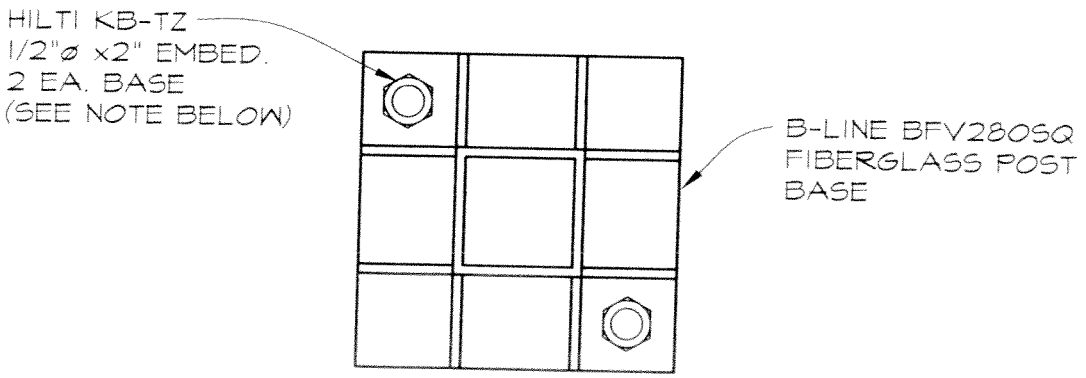

B – ANCHOR LAYOUT

N.T.S.

NOTE: 1. SPECIAL INSPECTION IS NOT REQUIRED.

tobey wade
CONSULTING
329 Flint Street
Reno, Nevada 89501
Tel. (775) 324-7757 Fax (775) 324-7797

STORAGE BAY
TANK DISCHARGE LINE
PREPARED FOR
PSC ENVIRONMENTAL SERVICES, LLC.
FERNLEY, NEVADA

Project No.
R115-07-08

2

Date: April 6, 2010

ENTERED 10/20/10

PSC FERNLEY FACILITY

TRUCK AND STORAGE BAY UNLOAD LINES PRESSURE TESTING INSPECTION FORM

PRESSURE TESTING PIPE LINE DESIGNATION: S101, S102 + S103 Discharge Lines

INSPECTOR: Brandon Ellis

DATE: 8-25-2010

- Location and route of line being test marked on attached drawing Yes
- Initial Check of Line

  Description No Leaks Present. Water Line and Air Line Pipes were Disconnected From the system (TYPICAL OF ALL Discharge Lines)
- Initial Pressure 40 psi (yes/no) 40 psi
- Time test started 10:00
- Time test ended (minimum 15 minutes) 10:15
- Pressure at end 40 psi
- Final Check of Line

  Leaks present (yes/no) No Leaks Present

  (If yes see attached drawing)
- Description of Photographs and the time they were taken

  1. _____
  2. _____
  3. _____
  4. _____
  5. _____
  6. _____

Inspector signature _____

TOBEY-WADE CONSULTING

ENTERED 10/20/10

PSC FERNLEY FACILITY

TRUCK AND STORAGE BAY UNLOAD LINES PRESSURE TESTING INSPECTION FORM

PRESSURE TESTING PIPE LINE DESIGNATION: S104 Discharge Line

INSPECTOR: Brandon Ellis

DATE: 9-22-2010

- Location and route of line being test marked on attached drawing Yes
- Initial Check of Line

  Description No Leaks Detected
- Initial Pressure 40 psi (yes/no) 40 psi
- Time test started 9:32
- Time test ended (minimum 15 minutes) 9:47
- Pressure at end 40 psi
- Final Check of Line

  Leaks present (yes/no) No Leaks

  (If yes see attached drawing)
- Description of Photographs and the time they were taken

  1. _____
  2. _____
  3. _____
  4. _____
  5. _____
  6. _____

Inspector signature Brandon C. Ellis

ENTERED 10/20/10

PSC FERNLEY FACILITY

TRUCK AND STORAGE BAY UNLOAD LINES PRESSURE TESTING INSPECTION FORM

PRESSURE TESTING PIPE LINE DESIGNATION: S105, S106 S107, S108 Discharge Line

INSPECTOR: Brandon Ellis

DATE: 8-25-2010

- Location and route of line being test marked on attached drawing Yes
- Initial Check of Line

  Description No Leaks Present

- Initial Pressure 40 psi (yes/no) 40 psi
- Time test started 10:25
- Time test ended (minimum 15 minutes) 10:40
- Pressure at end 40 psi
- Final Check of Line

  Leaks present (yes/no) No Leaks Present

  (If yes see attached drawing)

- Description of Photographs and the time they were taken

  1.
  2.
  3.
  4.
  5.
  6.

Inspector signature Brandon C. Ellis

TOBEY-WADE CONSULTING

ENTERED 10/20/10

PSC FERNLEY FACILITY

TRUCK AND STORAGE BAY UNLOAD LINES PRESSURE TESTING INSPECTION FORM

PRESSURE TESTING PIPE LINE DESIGNATION: 5109, 5110, 5111 Discharge Lines

INSPECTOR: Brandon Ellis

DATE: 8-25-2010

- Location and route of line being test marked on attached drawing Yes
- Initial Check of Line

  Description No Leaks Present

- Initial Pressure 40 psi (yes/no) Yes 40 psi
- Time test started 10:50
- Time test ended (minimum 15 minutes) 11:05
- Pressure at end 40 psi
- Final Check of Line

  Leaks present (yes/no) No Leaks Present

  (If yes see attached drawing)

- Description of Photographs and the time they were taken

  1.
  2.
  3.
  4.
  5.
  6.

Inspector signature Brandon L.

TOBEY-WADE CONSULTING

ENTERED 10/20/10

PSC FERNLEY FACILITY

TRUCK AND STORAGE BAY UNLOAD LINES PRESSURE TESTING INSPECTION FORM

PRESSURE TESTING PIPE LINE DESIGNATION: S201 & S202 Discharge Lines

INSPECTOR: Brandon Ellis

DATE: 8-25-2010

- Location and route of line being test marked on attached drawing Yes
- Initial Check of Line

  Description No Leaks Present
- Initial Pressure 40 psi (yes/no) 40 psi
- Time test started 9:25
- Time test ended (minimum 15 minutes) 9:40
- Pressure at end 40
- Final Check of Line

  Leaks present (yes/no) No Leaks Present

  (If yes see attached drawing)
- Description of Photographs and the time they were taken

  1.
  2.
  3.
  4.
  5.
  6.

Inspector signature Brandon C. Ellis

TOBEY-WADE CONSULTING

ENTERED 10/20/10

PSC FERNLEY FACILITY

TRUCK AND STORAGE BAY UNLOAD LINES PRESSURE TESTING INSPECTION FORM

PRESSURE TESTING PIPE LINE DESIGNATION: 5203, 5204 5205 + 5206 Discharge Lines

INSPECTOR: Brandon Ellis

DATE: 8-25-2010

- Location and route of line being test marked on attached drawing Yes
- Initial Check of Line

  Description ① Leak Found At Elbow Connection - Tank 203
  ② Leak Found At Elbow Connection - Tank 204
  Connections Tightened. Leaks Fixed
- Initial Pressure 40 psi (yes/no) 40
- Time test started 8:25 (STOPPED), Restarted At 8:50 (After Leaks were Fixed)
- Time test ended (minimum 15 minutes) 9:05
- Pressure at end 40 psi
- Final Check of Line

  Leaks present (yes/no) No Leaks at Final Check

  (If yes see attached drawing)
- Description of Photographs and the time they were taken
  1. See Attached Photo For Leak Locations (8:44)
  2.
  3.
  4.
  5.
  6.

Inspector signature Brandon C. Ellis

TOBEY-WADE CONSULTING

ENTERED 10/20/10

PSC FERNLEY FACILITY

TRUCK AND STORAGE BAY UNLOAD LINES PRESSURE TESTING INSPECTION FORM

PRESSURE TESTING PIPE LINE DESIGNATION: 5207 & 5208 Discharge Lines

INSPECTOR: Brandon Ellis

DATE: 8-25-2010

- Location and route of line being test marked on attached drawing Yes
- Initial Check of Line

  Description Water Line Pipe and Air Line Pipe Disconnected From System. No leaks detected.

- Initial Pressure 40 psi (yes/no) Yes 40 psi
- Time test started 8:05
- Time test ended (minimum 15 minutes) 8:20
- Pressure at end 40 psi
- Final Check of Line

  Leaks present (yes/no) No

  (If yes see attached drawing)

- Description of Photographs and the time they were taken

  1.
  2.
  3.
  4.
  5.
  6.

Inspector signature Brandon C. Ellis

TOBEY-WADE CONSULTING

ENTERED 10/20/10

tobeywade
STRUCTURAL ENGINEERS

September 22, 2010
Project No. R115-07-08

Mr. Aubry Burgess
PSC ENVIRONMENTAL SERVICES, LLC
2095 Newlands Drive East
Fernley, NV 89408

RE: TRUCK BAY AND STORAGE BAY PIPING SYSTEMS
TANK FILL LINES CERTIFICATION

Dear Mr. Burgess:

In accordance with the Fernley Facility Amended Tank Replacement Plan dated March 25, 2008 and with 40 CFR 264.192, the Receiving Bay and Tank Storage Bay piping systems are required to be certified by Independent Registered Professional Engineers (IRPE's) prior to being placed into service. This report has been prepared to document our evaluations of the Tank Fill Lines for Tanks S101 through S111 and S201 through S208.

Basis of Analysis

In general, the Amended Tank Replacement Plan and the applicable sections of 40 CFR 264.192 require that the piping systems are to be located in areas with adequate secondary containment, shall have sufficient structural support and shall be tested for tightness prior to being placed into service.

Our evaluations are based on specific piping layouts and information provided by PSC and on details of construction as contained in the original construction drawings as prepared by SEA, Inc. and dated November 1985.

This certification does not include the piping system's suitability and compatibility for its proposed use in PSC's facility as those issues have been addressed by others.

Findings

The Tank Fill Lines run from the Receiving Bay through the pipe gallery and vault to the Tank Storage Bay. The Fill Lines are supported by prefabricated structural support systems anchored to reinforced concrete walls and to the Center Cross-over structure. Our evaluation of the Tank Fill Lines is based on the requirements of the 2006 International Building Code (IBC) which is the governing building code for this facility. ASCE Standard 7-05 "Minimum Design Loads for Buildings and Other Structures" is incorporated by reference into the IBC.

ENTERED 10/20/10

329 FLINT STREET • RENO, NEVADA 89501 • TEL: (775) 324.7757 • FAX: (775) 324.7797

According to the IBC and ASCE 7-05, piping systems must be stable under normal operating conditions and during seismic events.

Based on our evaluation of the aforementioned Tank Fill Lines relative to IBC requirements, we have formed the following opinions:

1. The Tank Fill Lines are located in areas of sufficient secondary containment.

2. The prefabricated support systems were analyzed to verify their adequacy. The assemblies around the perimeter of the Storage Bay and below the Center Cross-over required additional bracing which has been installed. As well, the assemblies in the vault were proof-loaded to verify the capacity of the anchor bolts. Based on our evaluation and observations, the Tank Fill Lines can be considered to be adequately supported during normal operating conditions and during code-level seismic events. Documentation of our evaluation is attached.

3. The Tank Fill Lines were tested for tightness as documented in the attached Pressure Testing Inspection Forms. These lines are watertight.

Certification Statement

I certify under penalty of law that this report and all attachments were prepared under my direction and supervision in accordance with a system developed to assure that qualified personnel properly gather and evaluate the information submitted. Based on my inquiry of the person or persons who manage the system or those persons directly responsible for gathering the information, the information submitted is, to the best of my knowledge and belief, true, accurate, and complete. I am aware that there are significant penalties for submitting false information, including the possibility of fines and imprisonment for knowing violations.

This report has been prepared in accordance with acceptable engineering practices and is subject to the assumptions and limitations stated in the report. Also note that this certification covers the aforementioned aspects of the Tank Fill Lines only.

Please feel free to contact me at your convenience should you have any questions relating to our findings.

Sincerely,
TOBEY-WADE CONSULTING

Terrence R. Tobey

Terrence R. Tobey, P. E., S.E.
Principal Structural Engineer

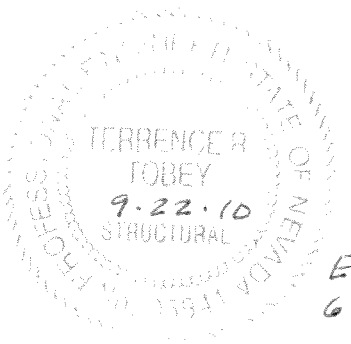

Exp.
6.30.12

ENTERED 10/20/10

tobey wade
STRUCTURAL ENGINEERS

JUL 23 2013

July 17, 2013
Project No. R405-12-13

Ms. Tracy Buono
Facility/Operations Manager
PSC FERNLEY FACILITY
2095 Newlands Drive East
Fernley, NV 89408

RE: DETOXIFICATION AND DEWATERING ROOMS
PROCESS PIPE CERTIFICATION

Dear Ms. Buono:

In accordance with the Fernley Facility Amended Tank Replacement Plan dated December 17, 2012, and Appendix D-6 of the pending July 2012 RECRA Permit, process pipe installations are required to be certified by an Independent Registered Professional Engineer (IRPE) prior to being placed into service.

This report has been prepared to document our evaluation of the process piping located within the Detoxification and Dewatering rooms. The general locations of the piping are shown as attachments to the Process Pipe Pressure Testing and Inspection forms.

Basis of Evaluation

In general, the Amended Tank Replacement Plan and the applicable sections of 40 CFR 264.192 require that the piping systems shall be located in areas with adequate secondary containment, shall be inspected for damage and shall be tested for tightness prior to being placed into service.

Please note that this certification does not address the piping's strength, suitability and compatibility for its proposed use in PSC's facility nor does our certification address the attachment of the piping to the supporting structure. Ancillary equipment associated with the process piping is not included in this certification.

NEVADA OFFICE
648 LANDER STREET ■ RENO, NEVADA 89509 ■ TEL: (775) 324.7757 ■ FAX: (775) 324.7797

Findings

Based on our evaluation, we have formed the following opinions:

1. The aforementioned Process Piping systems are located in areas with sufficient secondary containment.

2. The in-place Process Piping was visually inspected to determine the presence of damage such as punctures, scrapes, and cracks. As documented in the attached Process Piping Pressure Testing and Inspection form, the visible portions of the piping are undamaged.

3. The in-place Process Piping was tested for tightness as documented in the attached Pressure Testing and Inspection forms. Based on the pressure testing, these lines were determined to be watertight.

Certification Statement

I certify under penalty of law that this report and all attachments were prepared under my direction and supervision in accordance with a system developed to assure that qualified personnel properly gather and evaluate the information submitted. Based on my inquiry of the person or persons who manage the system or those persons directly responsible for gathering the information, the information submitted is, to the best of my knowledge and belief, true, accurate, and complete. I am aware that there are significant penalties for submitting false information, including the possibility of fines and imprisonment for knowing violations.

This report has been prepared in accordance with accepted engineering practices and is subject to the assumptions and limitations stated in the report. Also note that this certification covers the aforementioned aspects of the Process Pipe systems only.

Please feel free to contact me at your convenience should you have any questions relating to our findings.

Sincerely,
TOBEY-WADE CONSULTING

Terrence R. Tobey

TERRENCE R. TOBEY, P.E., S.E.
Principal Structural Engineer

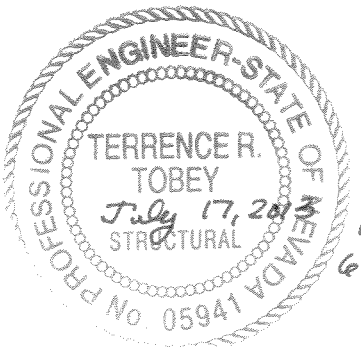

Exp. 6.30.14

PSC FERNLEY FACILITY

PROCESS PIPING PRESSURE TESTING & INSPECTION FORM

PRESSURE TESTING PIPE LINE DESIGNATION: Fill Lines - Lines (1) Acid

INSPECTOR: Brandon Ellis

DATE: June 27, 2013

- Discharge or Fill Line Fill Line - Acid
- Location and route of line being tested See Lines (1) on Drawing
- Initial Check of Line

  Comments System consisted of All Acid Lines. Valves were closed Before Entering the Tanks. No Leaks + Piping was in Good Condition
- Initial Pressure 40 psi (yes/no) Yes 40 psi
- Time test started 11:41 A.M.
- Time test ended (minimum 15 minutes) 11:56 A.M.
- Pressure at end of test 40 PSI
- Final Check of Line

  Leaks present (yes/no) No Leaks

  (If yes see attached drawing)
- Repairs to be made? None
- Description of Photographs and the time they were taken

  1.
  2.
  3.
  4.
  5.

Inspector signature Brandon Ellis

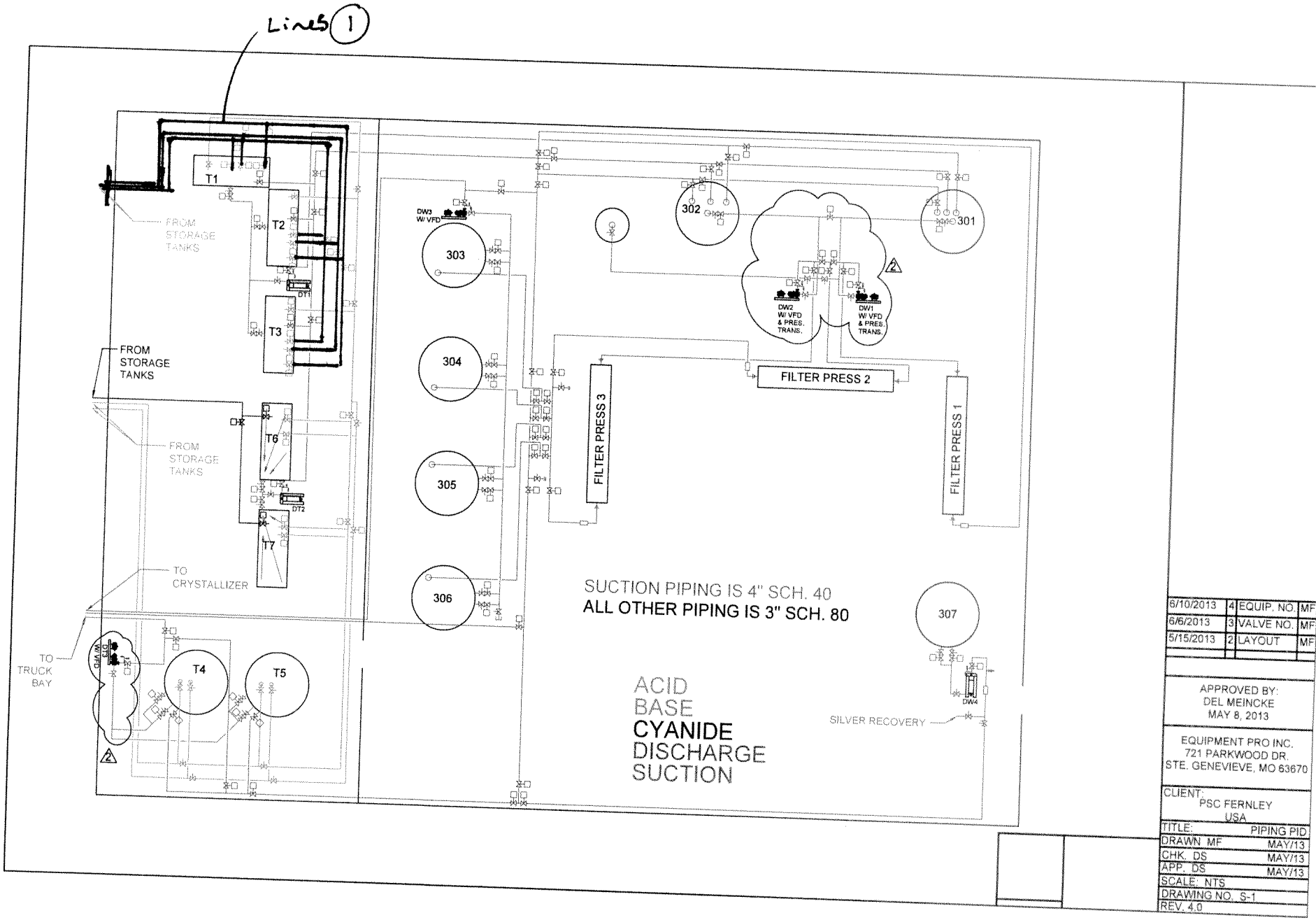

6/10/2013	4	EQUIP. NO.	MF
6/6/2013	3	VALVE NO.	MF
5/15/2013	2	LAYOUT	MF

APPROVED BY:
DEL MEINCKE
MAY 8, 2013

EQUIPMENT PRO INC.
721 PARKWOOD DR.
STE. GENEVIEVE, MO 63670

CLIENT:
PSC FERNLEY
USA

TITLE:	PIPING PID
DRAWN MF	MAY/13
CHK. DS	MAY/13
APP. DS	MAY/13
SCALE: NTS	
DRAWING NO. S-1	
REV. 4.0	

PSC FERNLEY FACILITY

PROCESS PIPING PRESSURE TESTING & INSPECTION FORM

PRESSURE TESTING PIPE LINE DESIGNATION: Lines (2) + Lines (2A)

INSPECTOR: Brandon Ellis

DATE: June 27, 2013

- Discharge or Fill Line Discharge + Suction Lines
- Location and route of line being tested See Lines (2) + (2A) on Drawing
- Initial Check of Line

  Comments Valves Closed Before Entering Tank. Discharge + Suction Lines Tested, which Included the manifold. Piping is in Good Condition. No Leaks
- Initial Pressure 40 psi (yes/no) Yes 40 psi
- Time test started 12:07 P.M.
- Time test ended (minimum 15 minutes) 12:22 P.M.
- Pressure at end of test 40 Psi
- Final Check of Line

  Leaks present (yes/no) No Leaks

  (If yes see attached drawing)
- Repairs to be made? None
- Description of Photographs and the time they were taken

  1. _____
  2. _____
  3. _____
  4. _____
  5. _____

Inspector signature Brandon Ellis

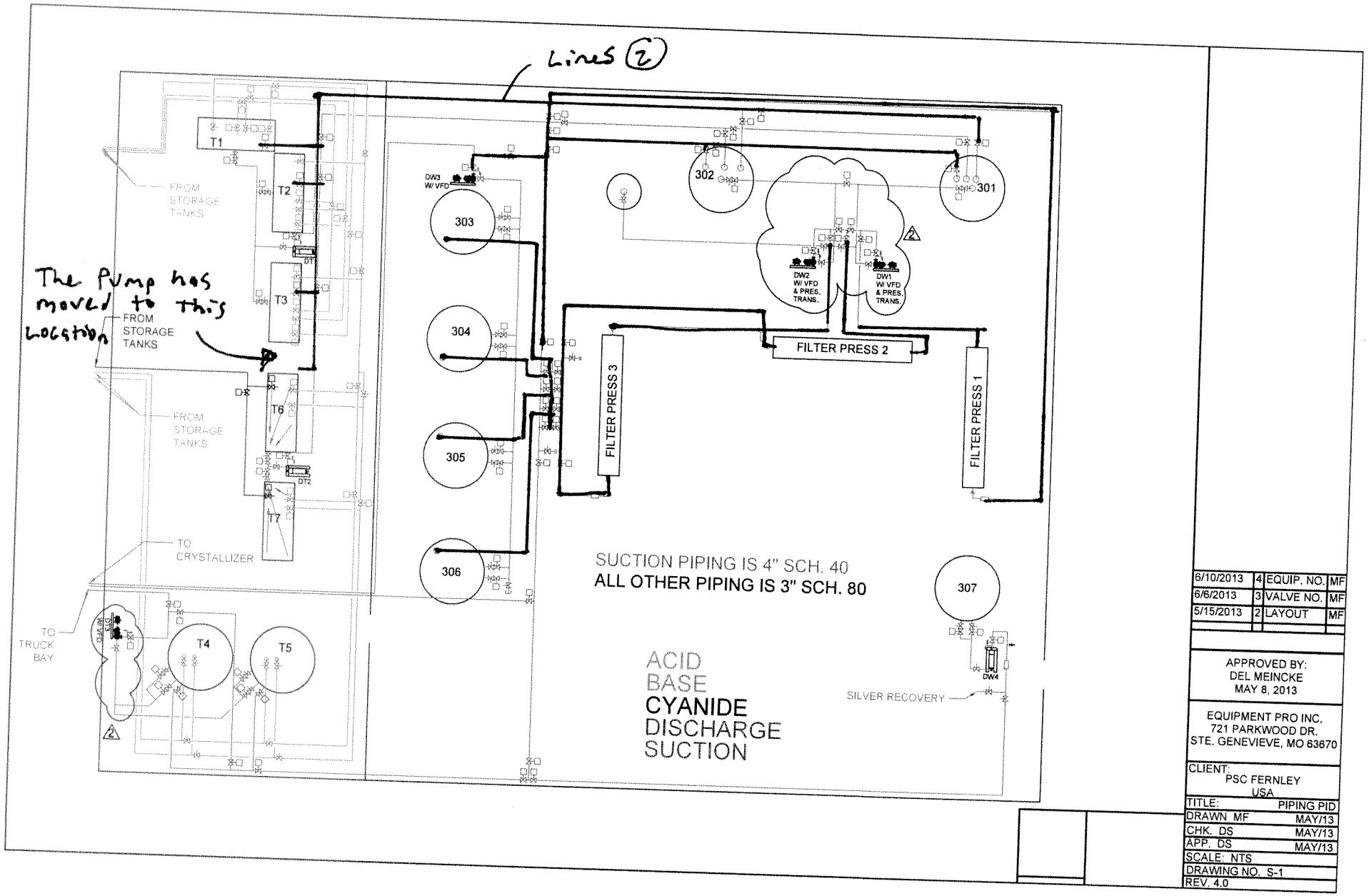

6/10/2013	4	EQUIP. NO.	MF
6/6/2013	3	VALVE NO.	MF
5/15/2013	2	LAYOUT	MF

APPROVED BY:
DEL MEINCKE
MAY 8, 2013

EQUIPMENT PRO INC.
721 PARKWOOD DR.
STE. GENEVIEVE, MO 63670

CLIENT:
PSC FERNLEY
USA

TITLE:	PIPING PID
DRAWN MF	MAY/13
CHK. DS	MAY/13
APP. DS	MAY/13
SCALE: NTS	
DRAWING NO. S-1	
REV. 4.0	

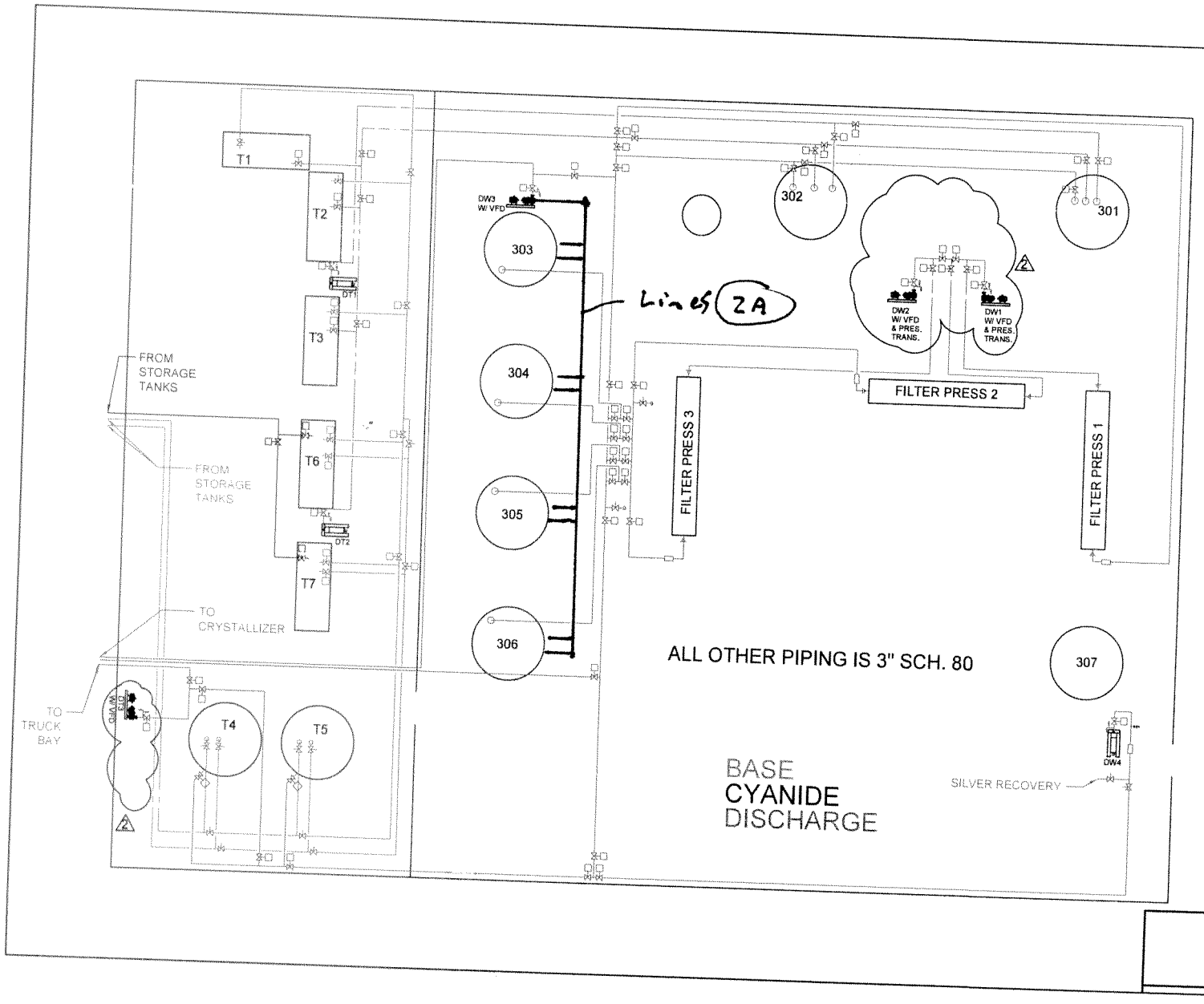

6/10/2013	4	EQUIP. NO.	MF
6/6/2013	3	VALVE NO.	MF
5/15/2013	2	LAYOUT	MF

APPROVED BY:
DEL MEINCKE
MAY 8, 2013

EQUIPMENT PRO INC.
721 PARKWOOD DR.
STE. GENEVIEVE, MO 63670

CLIENT: PSC FERNLEY USA

TITLE:	PIPING PID
DRAWN MF	MAY/13
CHK. DS	MAY/13
APP. DS	MAY/13
SCALE: NTS	
DRAWING NO. S-1	
REV. 4.0	

PSC FERNLEY FACILITY

PROCESS PIPING PRESSURE TESTING & INSPECTION FORM

PRESSURE TESTING PIPE LINE DESIGNATION: Discharge Lines - Lines (3)

INSPECTOR: Brandon Ellis

DATE: June 27, 2013

- Discharge or Fill Line Discharge Lines
- Location and route of line being tested See Lines (3) on Drawing
- Initial Check of Line

  Comments Valves closed Before Entering Tanks. Piping in Good Condition. No Leaks.

- Initial Pressure 40 psi (yes/no) Yes 40 psi
- Time test started 12:43 PM
- Time test ended (minimum 15 minutes) 12:58 PM
- Pressure at end of test 40 psi
- Final Check of Line

  Leaks present (yes/no) No Leaks

  (If yes see attached drawing)

- Repairs to be made? None
- Description of Photographs and the time they were taken

  1.
  2.
  3.
  4.
  5.

Inspector signature Brandon Ellis

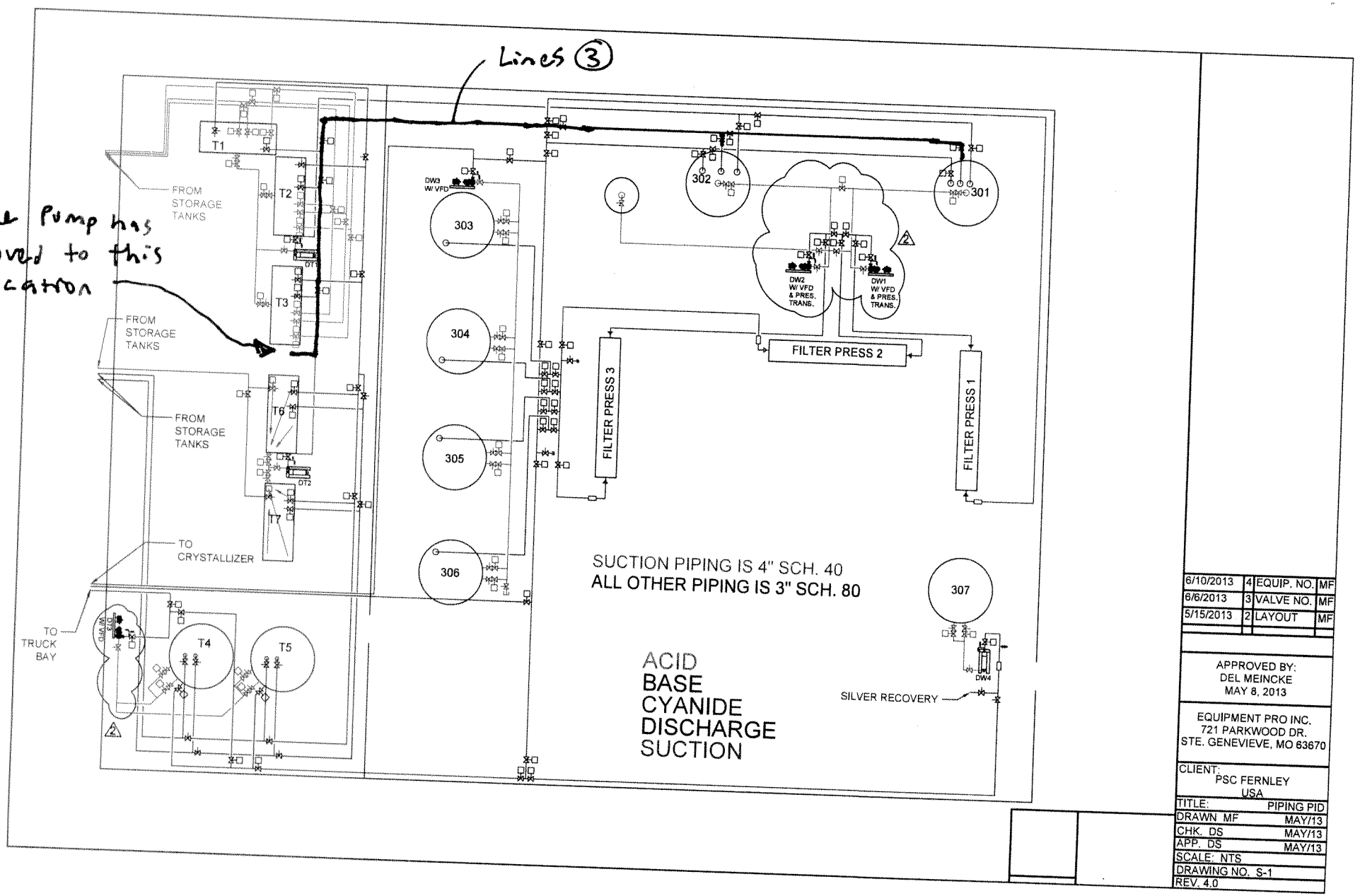

6/10/2013	4	EQUIP. NO.	MF
6/6/2013	3	VALVE NO.	MF
5/15/2013	2	LAYOUT	MF

APPROVED BY:
DEL MEINCKE
MAY 8, 2013

EQUIPMENT PRO INC.
721 PARKWOOD DR.
STE. GENEVIEVE, MO 63670

CLIENT:
PSC FERNLEY
USA

TITLE:	PIPING PID
DRAWN MF	MAY/13
CHK. DS	MAY/13
APP. DS	MAY/13
SCALE: NTS	
DRAWING NO. S-1	
REV. 4.0	

PSC FERNLEY FACILITY

PROCESS PIPING PRESSURE TESTING & INSPECTION FORM

PRESSURE TESTING PIPE LINE DESIGNATION: Base Fill Lines - Lines (4) + Suction Lines (4A)

INSPECTOR: Brandon Ellis

DATE: June 27, 2013

- Discharge or Fill Line Base Fill Lines & Suction Lines
- Location and route of line being tested See Lines (4) + (4A)
- Initial Check of Line

  Comments Valves Closed Before Entering Tank. Full Test on Base Fill Lines & Suction Lines For Tanks T-4 / T-5. Piping in Good Condition.
- Initial Pressure 40 psi (yes/no) Yes 40 Psi
- Time test started 12:23 - Leaked / 12:54 (Retested)
- Time test ended (minimum 15 minutes) 1:09
- Pressure at end of test 40 PSI
- Final Check of Line

  Leaks present (yes/no) No Leaks on Final Check

  (If yes see attached drawing)
- Repairs to be made? Leak Fixed - No Repairs Needed
- Description of Photographs and the time they were taken

  1. _____
  2. _____
  3. _____
  4. _____
  5. _____

Inspector signature Brandon Ellis

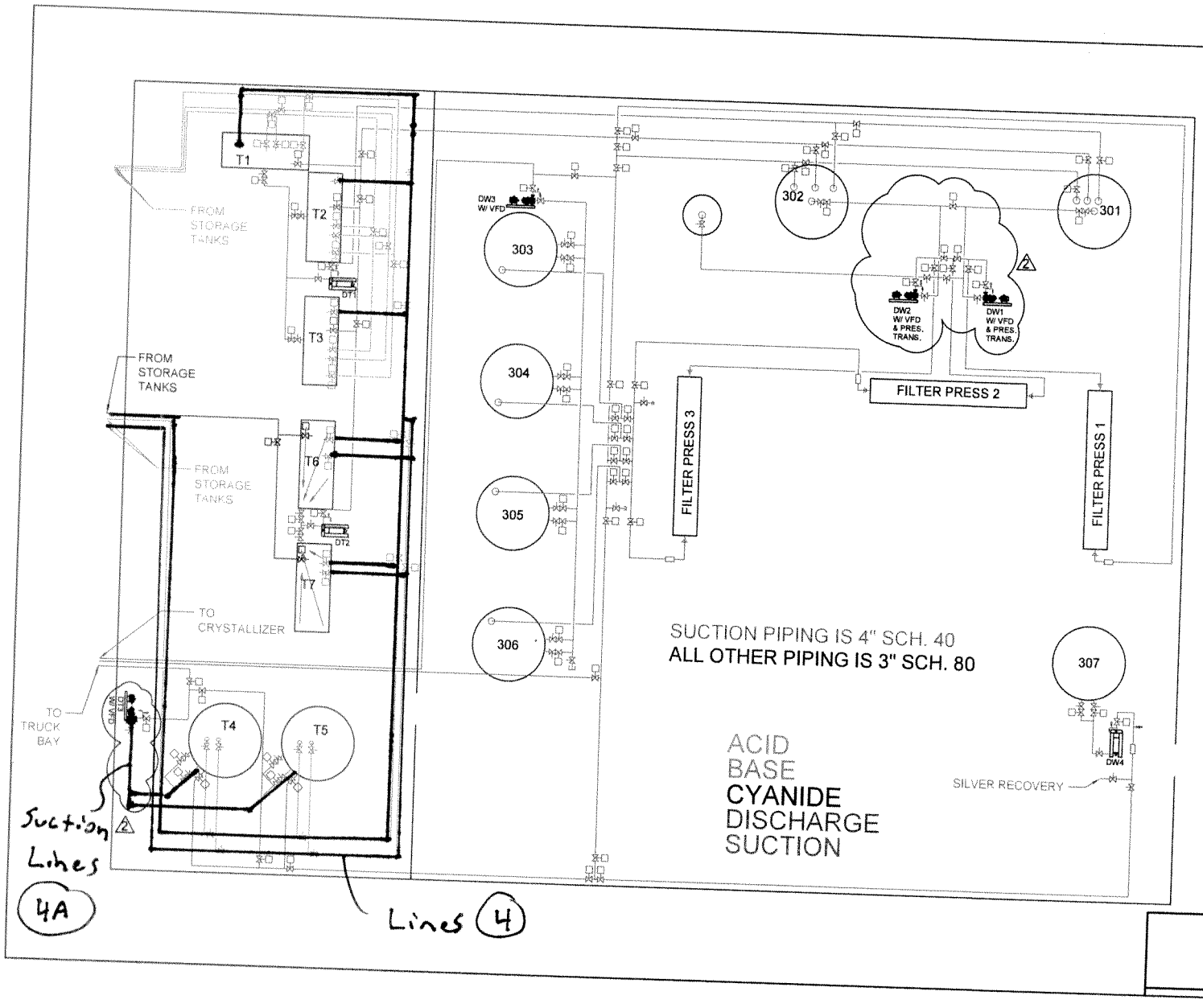

6/10/2013	4	EQUIP. NO.	MF
6/6/2013	3	VALVE NO.	MF
5/15/2013	2	LAYOUT	MF

APPROVED BY:
DEL MEINCKE
MAY 8, 2013

EQUIPMENT PRO INC.
721 PARKWOOD DR.
STE. GENEVIEVE, MO 63670

CLIENT: PSC FERNLEY USA

TITLE: PIPING PID

DRAWN MF	MAY/13
CHK. DS	MAY/13
APP. DS	MAY/13
SCALE: NTS	
DRAWING NO. S-1	
REV. 4.0	

PSC FERNLEY FACILITY

PROCESS PIPING PRESSURE TESTING & INSPECTION FORM

PRESSURE TESTING PIPE LINE DESIGNATION: Discharge Lines - Lines (5)

INSPECTOR: Brandon Ellis

DATE: July 2, 2013

- Discharge or Fill Line Discharge Lines
- Location and route of line being tested See Lines (5) on Drawings
- Initial Check of Line

  Comments Valve Closed Before Entering Tank. No Leaks. Piping in Good Condition.

- Initial Pressure 40 psi (yes/no) Yes 40 psi
- Time test started 10:13 A.M.
- Time test ended (minimum 15 minutes) 10:28 A.M.
- Pressure at end of test 40 psi
- Final Check of Line

  Leaks present (yes/no) No

  (If yes see attached drawing)

- Repairs to be made? No
- Description of Photographs and the time they were taken

  1.
  2.
  3.
  4.
  5.

Inspector signature Brandon Ellis

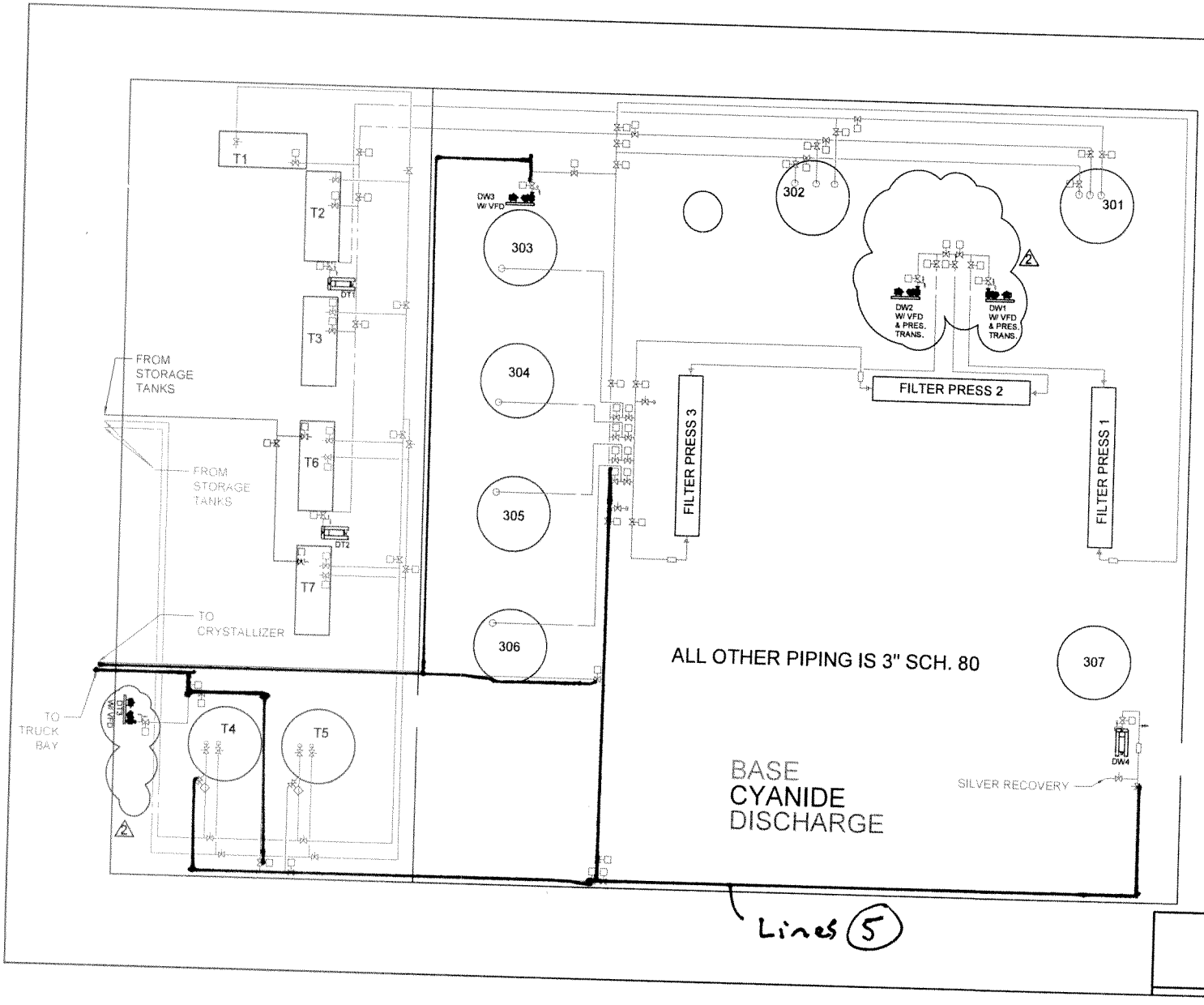

6/10/2013	4	EQUIP. NO.	MF
6/6/2013	3	VALVE NO.	MF
5/15/2013	2	LAYOUT	MF

APPROVED BY:
DEL MEINCKE
MAY 8, 2013

EQUIPMENT PRO INC.
721 PARKWOOD DR.
STE. GENEVIEVE, MO 63670

CLIENT:
PSC FERNLEY
USA

TITLE:	PIPING PID
DRAWN MF	MAY/13
CHK. DS	MAY/13
APP. DS	MAY/13
SCALE: NTS	
DRAWING NO. S-1	
REV. 4.0	

PSC FERNLEY FACILITY

PROCESS PIPING PRESSURE TESTING & INSPECTION FORM

PRESSURE TESTING PIPE LINE DESIGNATION: Suction Lines - Lines (6)

INSPECTOR: Brandon Ellis

DATE: July 2, 2013

- Discharge or Fill Line Suction Lines
- Location and route of line being tested See Lines (6) on Drawing
- Initial Check of Line

  Comments Tested Up to Pump (Not Including Pump). No Leaks. Piping in Good Condition

- Initial Pressure 40 psi (yes/no) 40 Psi
- Time test started 10:17 A.M.
- Time test ended (minimum 15 minutes) 10:32 A.M.
- Pressure at end of test 40 Psi
- Final Check of Line

  Leaks present (yes/no) No

  (If yes see attached drawing)

- Repairs to be made? None
- Description of Photographs and the time they were taken

  1.
  2.
  3.
  4.
  5.

Inspector signature Brent Gee

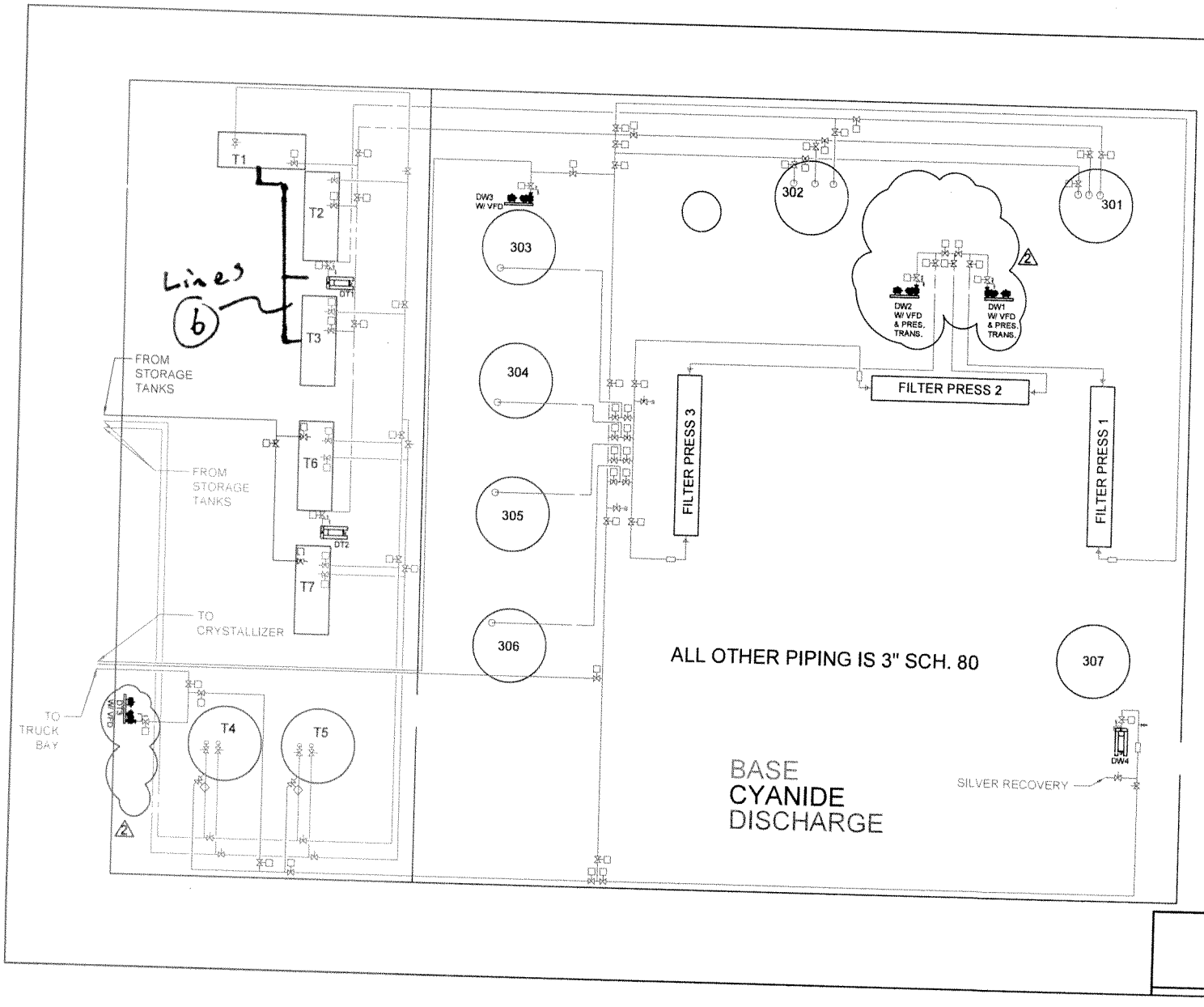

6/10/2013	4	EQUIP. NO.	MF
6/6/2013	3	VALVE NO.	MF
5/15/2013	2	LAYOUT	MF

APPROVED BY:
DEL MEINCKE
MAY 8, 2013

EQUIPMENT PRO INC.
721 PARKWOOD DR.
STE. GENEVIEVE, MO 63670

CLIENT:
PSC FERNLEY
USA

TITLE:	PIPING PID
DRAWN MF	MAY/13
CHK. DS	MAY/13
APP. DS	MAY/13
SCALE: NTS	
DRAWING NO. S-1	
REV. 4.0	

PSC FERNLEY FACILITY

PROCESS PIPING PRESSURE TESTING & INSPECTION FORM

PRESSURE TESTING PIPE LINE DESIGNATION: Cyanide Lines - Lines (7)

INSPECTOR: Brandon Ellis

DATE: July 2, 2013

- Discharge or Fill Line Fill Lines
- Location and route of line being tested Lines (7) on Drawing
- Initial Check of Line

  Comments Valves Closed Before Entering Tanks. No Leaks Found. Piping in Good Condition
- Initial Pressure 40 psi (yes/no) 40 Psi
- Time test started 10:50 A.M.
- Time test ended (minimum 15 minutes) 11:05 A.M.
- Pressure at end of test 40 Psi
- Final Check of Line

  Leaks present (yes/no) No

  (If yes see attached drawing)
- Repairs to be made? None
- Description of Photographs and the time they were taken

  1. _____
  2. _____
  3. _____
  4. _____
  5. _____

Inspector signature Brandon Ellis

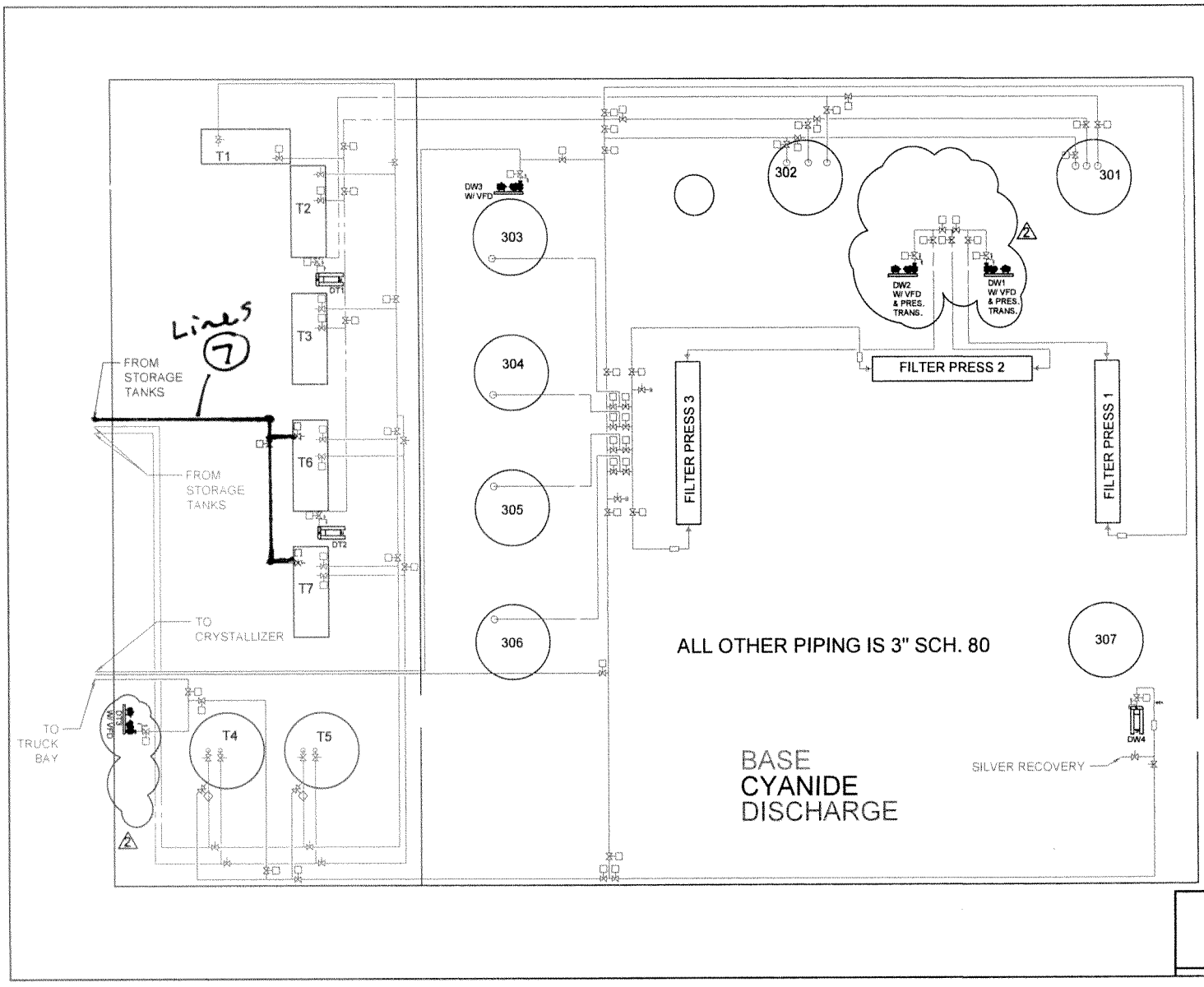

6/10/2013	4	EQUIP. NO.	MF
6/6/2013	3	VALVE NO.	MF
5/15/2013	2	LAYOUT	MF

APPROVED BY:
DEL MEINCKE
MAY 8, 2013

EQUIPMENT PRO INC.
721 PARKWOOD DR.
STE. GENEVIEVE, MO 63670

CLIENT:
PSC FERNLEY
USA

TITLE:	PIPING PID
DRAWN MF	MAY/13
CHK. DS	MAY/13
APP. DS	MAY/13
SCALE: NTS	
DRAWING NO. S-1	
REV. 4.0	

PSC FERNLEY FACILITY

PROCESS PIPING PRESSURE TESTING & INSPECTION FORM

PRESSURE TESTING PIPE LINE DESIGNATION: Suction Piping - Lines (8)

INSPECTOR: Brandon Ellis

DATE: July 2, 2013

- Discharge or Fill Line Suction Lines
- Location and route of line being tested See Lines (8) on Drawing
- Initial Check of Line

  Comments Initial Testing had Leak. Leak was Fixed. Valves Closed Before Entering Tanks. Piping in Good Condition
- Initial Pressure 40 psi (yes/no) 40 psi
- Time test started 12:50 P.M.
- Time test ended (minimum 15 minutes) 1:05 P.M.
- Pressure at end of test 40 psi
- Final Check of Line

  Leaks present (yes/no) No

  (If yes see attached drawing)
- Repairs to be made? None
- Description of Photographs and the time they were taken

  1. _____
  2. _____
  3. _____
  4. _____
  5. _____

Inspector signature Brandon Ellis

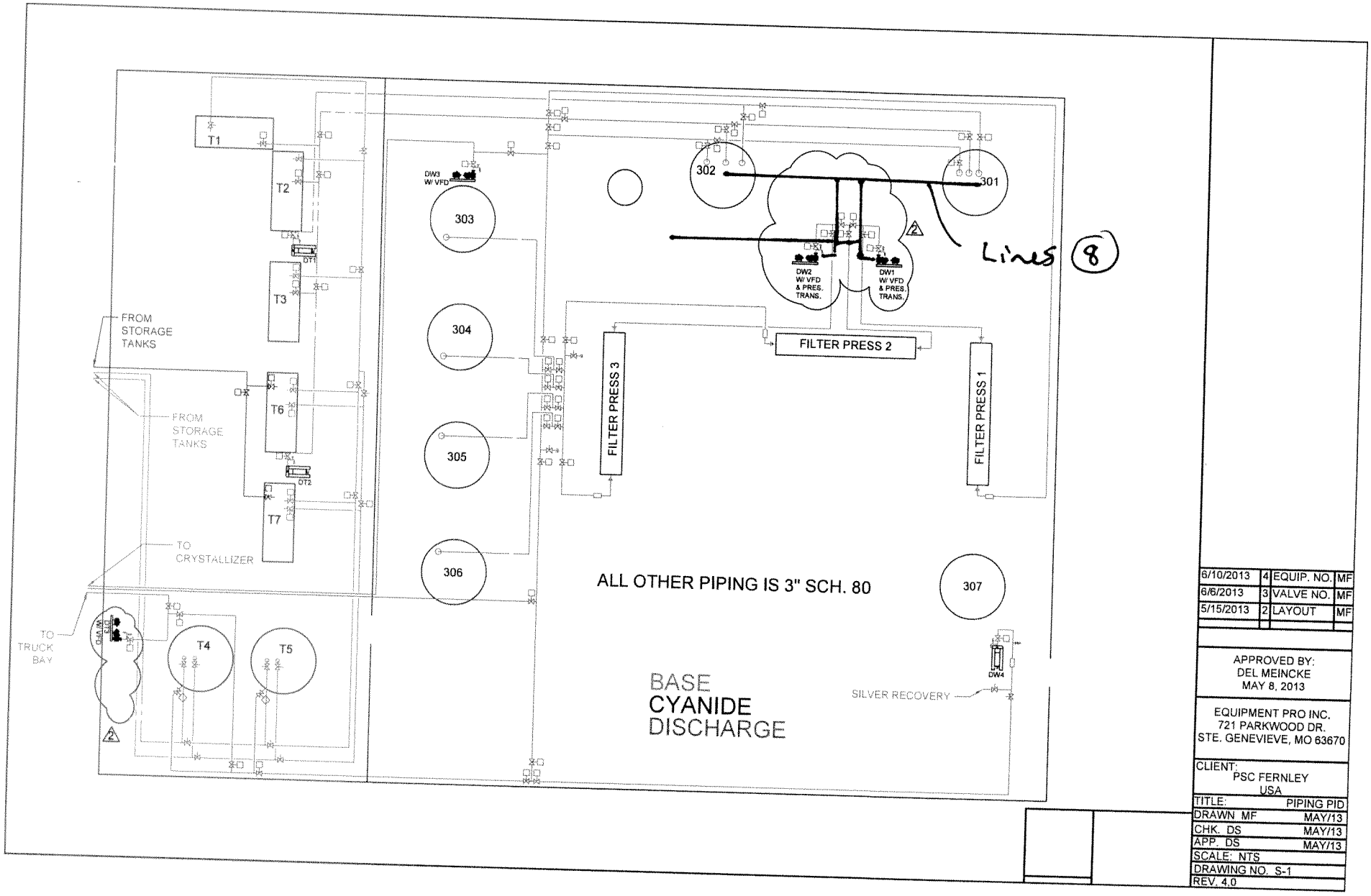

6/10/2013	4	EQUIP. NO.	MF
6/6/2013	3	VALVE NO.	MF
5/15/2013	2	LAYOUT	MF

APPROVED BY:
DEL MEINCKE
MAY 8, 2013

EQUIPMENT PRO INC.
721 PARKWOOD DR.
STE. GENEVIEVE, MO 63670

CLIENT:
PSC FERNLEY
USA

TITLE:	PIPING PID
DRAWN MF	MAY/13
CHK. DS	MAY/13
APP. DS	MAY/13
SCALE: NTS	
DRAWING NO. S-1	
REV. 4.0	

PSC FERNLEY FACILITY

PROCESS PIPING PRESSURE TESTING & INSPECTION FORM

PRESSURE TESTING PIPE LINE DESIGNATION: T6/T7 Suction Lines - Lines (9)

INSPECTOR: Brandon Ellis

DATE: July 17, 2013

- Discharge or Fill Line Suction Line
- Location and route of line being tested See Drawing - Lines (9)
- Initial Check of Line

  Comments Values closed Before Entering Tank. Piping in Good Condition. Does Not Include Pump. First Tests had Leaks. Leak Fixed
- Initial Pressure 40 psi (yes/no) Yes 40 psi.
- Time test started 11:16 - Leak / 11:37 - Leak / 12:09
- Time test ended (minimum 15 minutes) 12:24
- Pressure at end of test 40 psi
- Final Check of Line

  Leaks present (yes/no) NO

  (If yes see attached drawing)
- Repairs to be made? None. Leak was Fixed.
- Description of Photographs and the time they were taken

  1. _____
  2. _____
  3. _____
  4. _____
  5. _____

Inspector signature Brandon Ellis

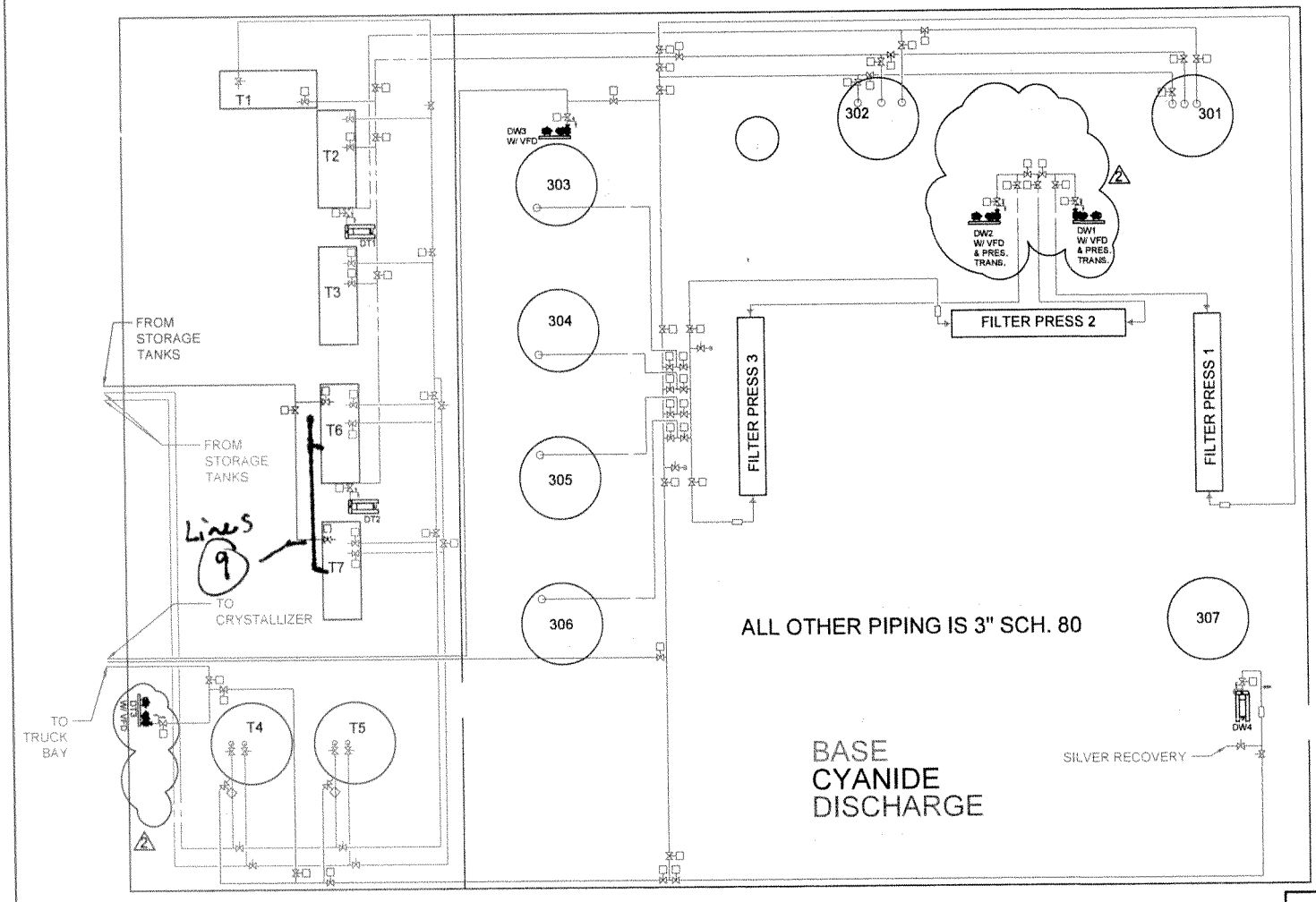

6/10/2013	4	EQUIP. NO.	MF
6/6/2013	3	VALVE NO.	MF
5/15/2013	2	LAYOUT	MF

APPROVED BY:
DEL MEINCKE
MAY 8, 2013

EQUIPMENT PRO INC.
721 PARKWOOD DR.
STE. GENEVIEVE, MO 63670

CLIENT:
PSC FERNLEY
USA

TITLE:	PIPING PID
DRAWN MF	MAY/13
CHK. DS	MAY/13
APP. DS	MAY/13
SCALE: NTS	
DRAWING NO. S-1	
REV. 4.0	