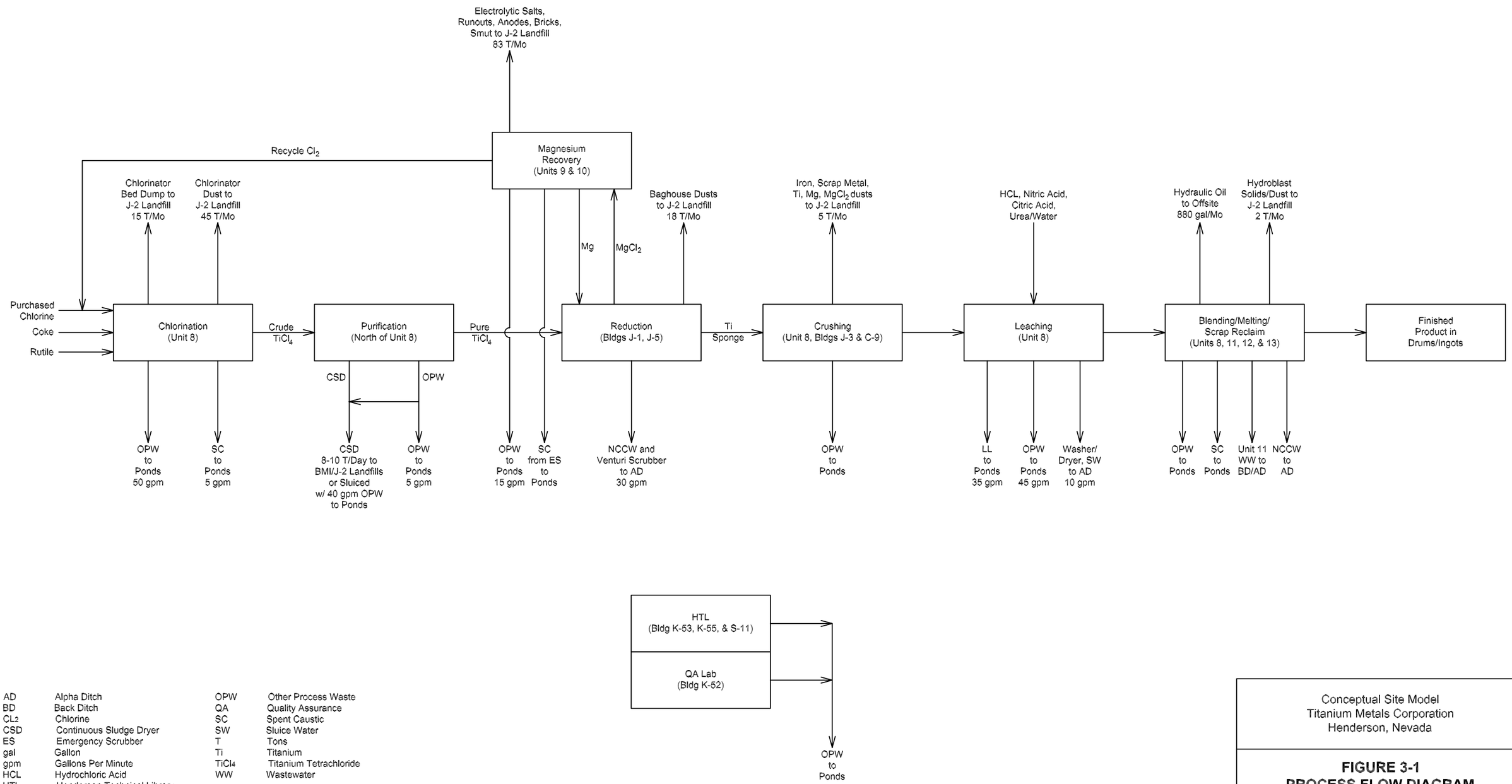

AD	Alpha Ditch
BD	Back Ditch
CL_2	Chlorine
CSD	Continuous Sludge Dryer
ES	Emergency Scrubber
gal	Gallon
gpm	Gallons Per Minute
HCL	Hydrochloric Acid
HTL	Henderson Technical Library
LL	Leach Liquor
Mg	Magnesium
$MgCl_2$	Magnesium Chloride
Mo	Month
NCCW	Non-Contact Cooling Water
OPW	Other Process Waste
QA	Quality Assurance
SC	Spent Caustic
SW	Sluice Water
T	Tons
Ti	Titanium
$TiCl_4$	Titanium Tetrachloride
WW	Wastewater

Conceptual Site Model
Titanium Metals Corporation
Henderson, Nevada

FIGURE 3-1
PROCESS FLOW DIAGRAM
1950s-1993

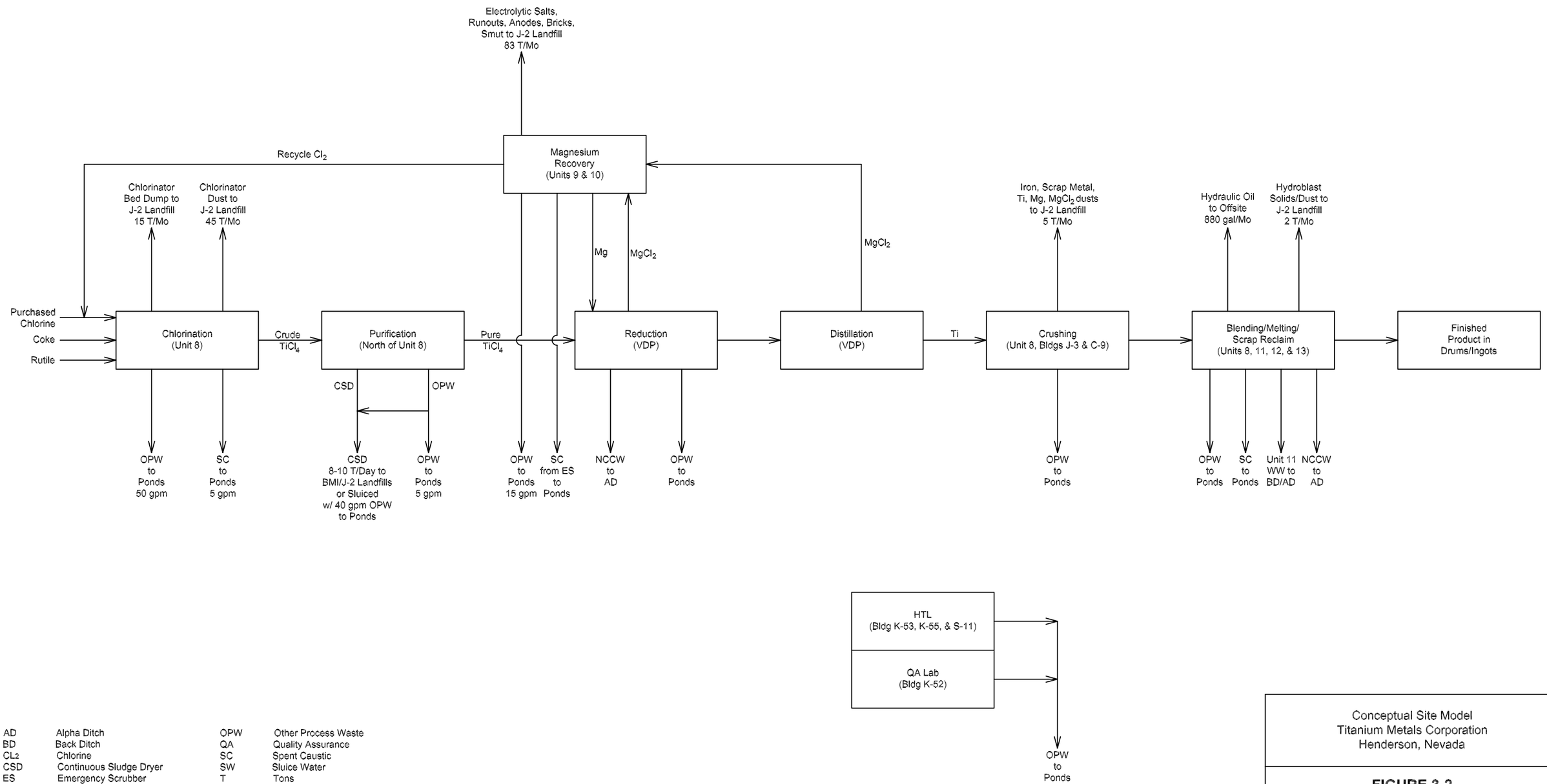

AD	Alpha Ditch	OPW	Other Process Waste
BD	Back Ditch	QA	Quality Assurance
CL_2	Chlorine	SC	Spent Caustic
CSD	Continuous Sludge Dryer	SW	Sluice Water
ES	Emergency Scrubber	T	Tons
gal	Gallon	Ti	Titanium
gpm	Gallons Per Minute	$TiCl_4$	Titanium Tetrachloride
HTL	Henderson Technical Library	WW	Wastewater
Mg	Magnesium		
$MgCl_2$	Magnesium Chloride		
Mo	Month		
NCCW	Non-Contact Cooling Water		

Conceptual Site Model
Titanium Metals Corporation
Henderson, Nevada

FIGURE 3-2
PROCESS FLOW DIAGRAM
1993-2005

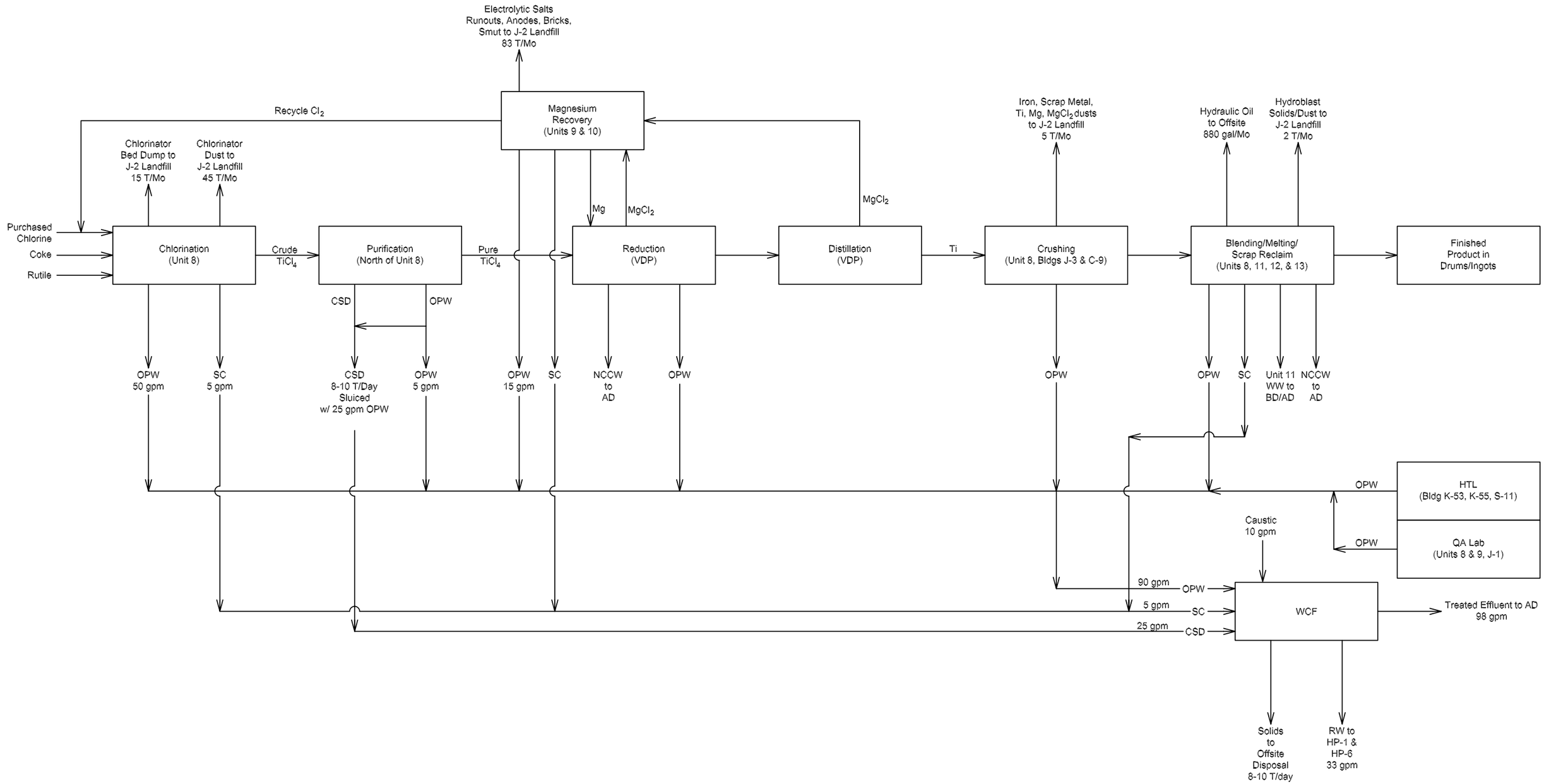

AD	Alpha Ditch
BD	Back Ditch
CL_2	Chlorine
CSD	Continuous Sludge Dryer
ES	Emergency Scrubber
gal	Gallon
gpm	Gallons Per Minute
HTL	Henderson Technical Library
Mg	Magnesium
$MgCl_2$	Magnesium Chloride
Mo	Month
NCCW	Non-Contact Cooling Water
OPW	Other Process Waste
QA	Quality Assurance
RW	Reject Water
SC	Spent Caustic
SW	Sluice Water
T	Tons
Ti	Titanium
$TiCl_4$	Titanium Tetrachloride
WCF	Wastewater Conservation Facility
WW	Wastewater

Conceptual Site Model
Titanium Metals Corporation
Henderson, Nevada

FIGURE 3-3
PROCESS FLOW DIAGRAM
2005-Present

TIMET Owned Parcels

Source Area

- 1 - Surface Ditches and Northern Storage Area
- 2 - Near-Surface-Soil Source Areas
- 3 - Pond Areas
- 4 - J2 Landfill Area
- 5 - Current and Historic Operational Areas

Potential Source Area Features

PSA #	Description
1	Northern Storage Area
2	CSD North and South Ponds
3	Francy's Mountain
4	Pioche Manganese Landfill S-20
5	Site Pond SW-1
6	Site Pond HP-1
7	HP-6 Pond
8	Old Caustic Pond/CSD Stockpile
9	Low-lying area adjacent to the east side of site pond HP-6.
13	Rutile off loading area
15	Materials and Equipment Storage Area Located East of Building J-2
16	Used Paints and Solvent Area
17	S-17 Landfill
18	Area of Stained Soil Between Units 8 & 9
19	Vicinity of Northwest Corner of Unit 7
20	Unit 10 Demolition Soil Stockpile
22	Boneyard
23	Soils in Area South of Building K-53 Bay Doors
25	Chemtec Corporation Site
27	BMI J-9 Tailings Ponds
30	J2/S-18 Landfill
32	White Material Deposits
33	Rubble and Debris
34	Spill Stain on Avenue F
35	Drum Storage Areas
36	Rail Delivery Areas & Acid Tank Farm and Ancillary Piping
37	Coke Storage Silo
38	Titanium tetrachloride railcar loading

N
W E
S

500 250 0 500
Feet

Conceptual Site Model
Titanium Metals Corporation
Henderson, Nevada

FIGURE 3-4
TIMET PLANT SITE PARCELS
WITH POTENTIAL SOURCE AREAS

TIMET

TIMET OWNED PARCELS

Potential Source Area Number 10

- OPW Piping TIMET Drawing No. 130-D-1125, 1969 Amended 1984 and 1990 8" to 18" Lines
- CSD Piping TIMET Drawing No. 130-D-1125, 1969 Amended 1984 and 1990 8" Lines
- Caustic Piping TIMET Drawing No. 130-D-1125, 1969 Amended 1984 and 1990 10" to 12" Lines
- OPW to BMI Ponds TIMET Drawing No. 130-D-1094, 1958 24" VCP (Vitrified Clay Pipe) Lines (Abandoned)
- Sludge Disposal Line TIMET Drawing No. 130-D-1094, 1958 (Abandoned)
- Sludge Line; 3" WSP Line (Abandoned)
- Caustic Line TIMET Drawing No. 130-D-1330, 1984 10" VCP Line with Plastisol Gaskets (Abandoned)
- Effluent Pipe (Acid) TIMET Drawing No. 130-D-1094, 1958 21" Line (Abandoned)
- Current CSD Piping
- Cooling Water Supply Piping
- Cooling Water Return Piping

N
W E
S

500 250 0 500
Feet

Conceptual Site Model
Titanium Metals Corporation
Henderson, Nevada

FIGURE 3-5
TIMET PLANT SITE PARCELS
POTENTIAL SOURCE AREAS
SUBSURFACE CONVEYANCES

TIMET

TIMET OWNED PARCELS

Potential Source Area Number 11

- Pre-1955 - Drainage
- 1958 - Drainage
- 1979 - Drainage
- Conveyance Ditch

Potential Source Area Number 12

- Alpha Ditch

Potential Source Area Number 21

- Back Ditch

Potential Source Area Number 28

- Hydroblast Descaling Water Channel

Potential Source Area Number 29

- Unit 11 Liquid Discharge Channel

N
W E
S

500 250 0 500
Feet

Conceptual Site Model
Titanium Metals Corporation
Henderson, Nevada

FIGURE 3-6
TIMET PLANT SITE PARCELS
POTENTIAL SOURCE AREAS
SURFACE WATER CONVEYANCES

TIMET

TIMET OWNED PARCELS

Potential Source Area Number 31

Roadways

N
W E
S

500 250 0 500
Feet

Conceptual Site Model
Titanium Metals Corporation
Henderson, Nevada

FIGURE 3-7
TIMET PLANT SITE PARCELS
POTENTIAL SOURCE AREAS
ROADWAYS

TIMET