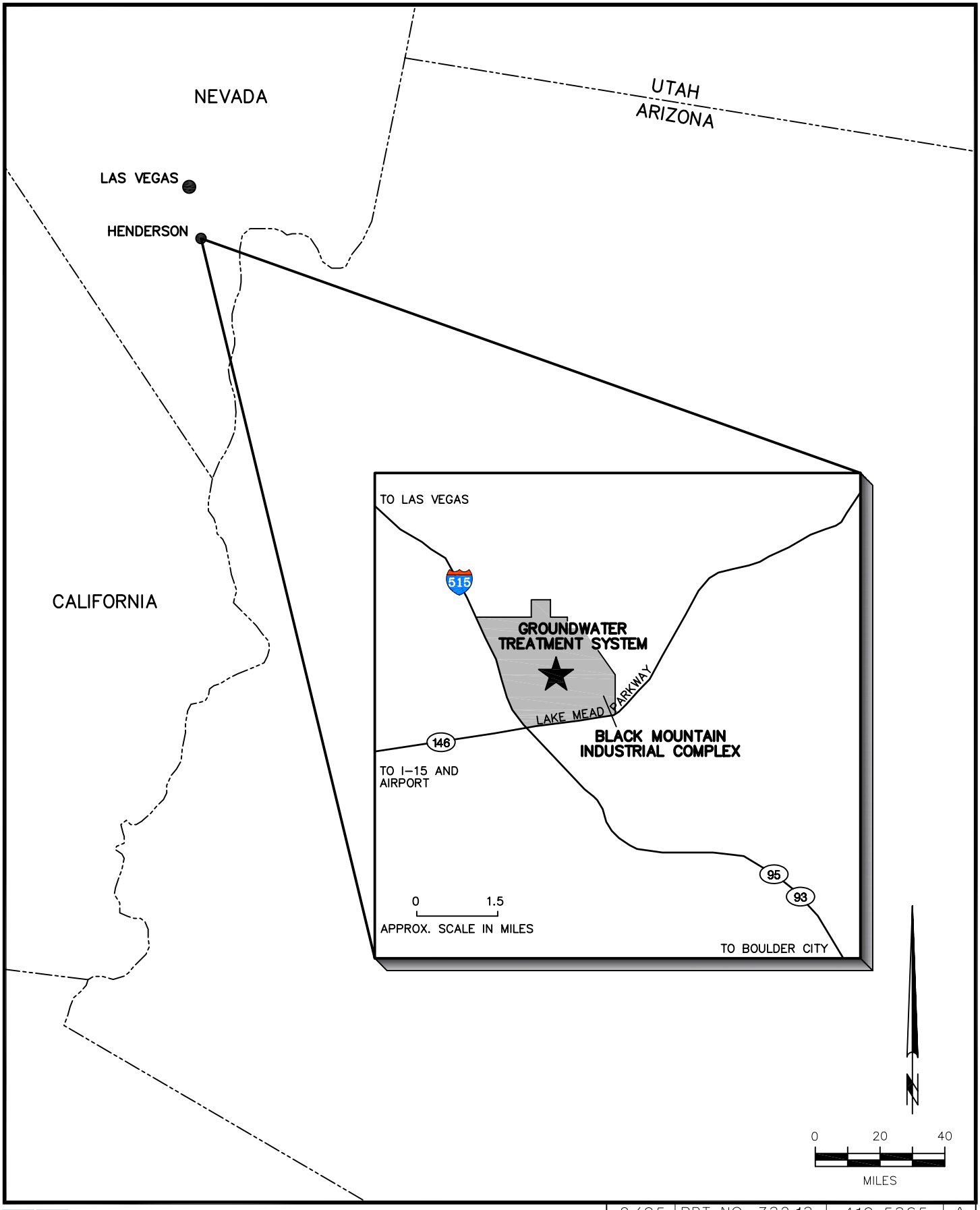

8/05	RPT NO. 732.13	410-5365	A

HARGIS + ASSOCIATES, INC.
Hydrogeology/Engineering

FIGURE 1.
HENDERSON GROUNDWATER TREATMENT SYSTEM LOCATION

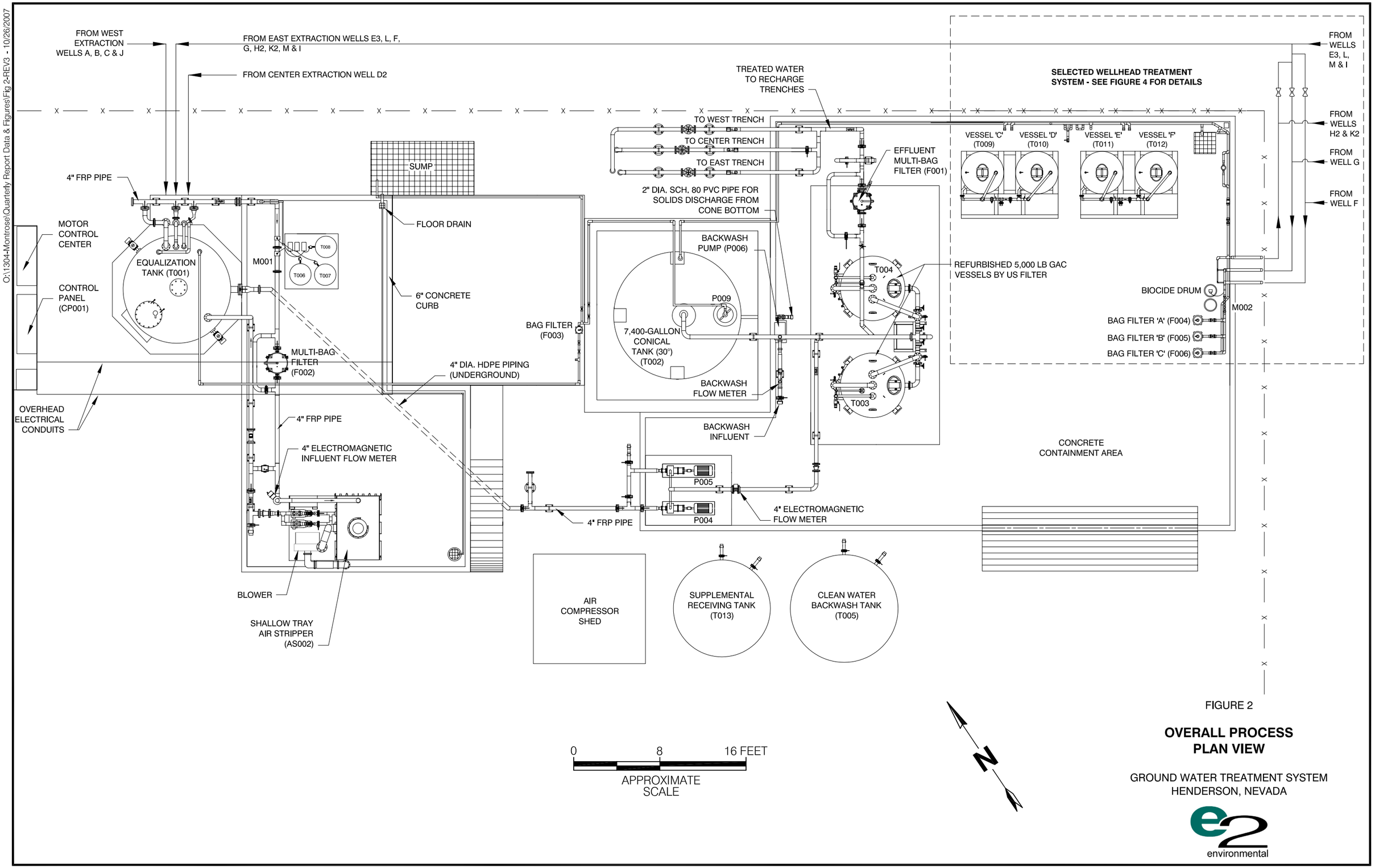

FIGURE 2

OVERALL PROCESS PLAN VIEW

GROUND WATER TREATMENT SYSTEM
HENDERSON, NEVADA

O:\1304-Montrose\Quarterly Report Data & Figures\Fig 3 REV5 - 10/26/2007

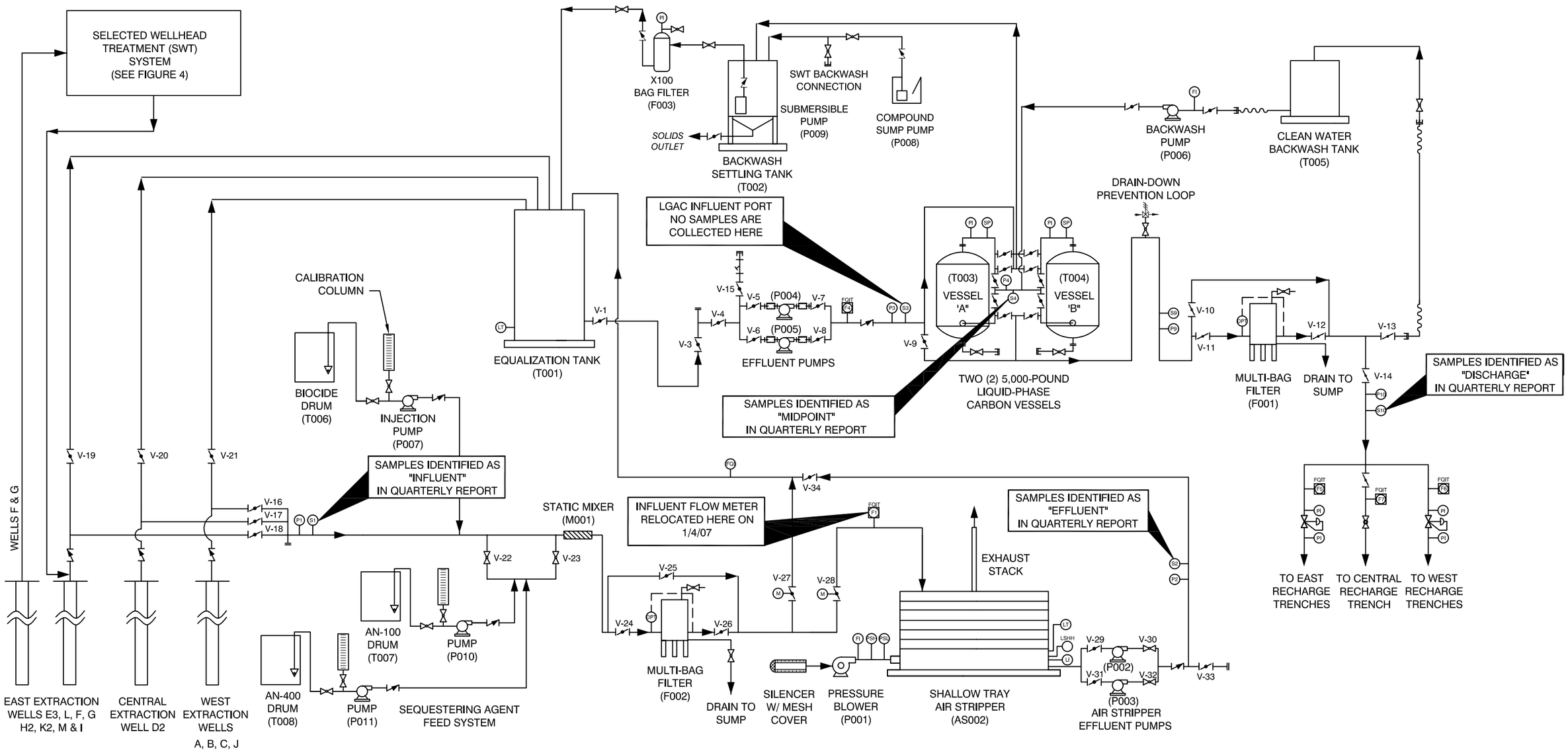

FIGURE 3

OVERALL PROCESS FLOW DIAGRAM

GROUND WATER TREATMENT SYSTEM
HENDERSON, NEVADA

e2 environmental

O:\1304-Montrose\Quarterly Report Data & Figures\Fig 4-Revised Oct 07 - 10/26/2007

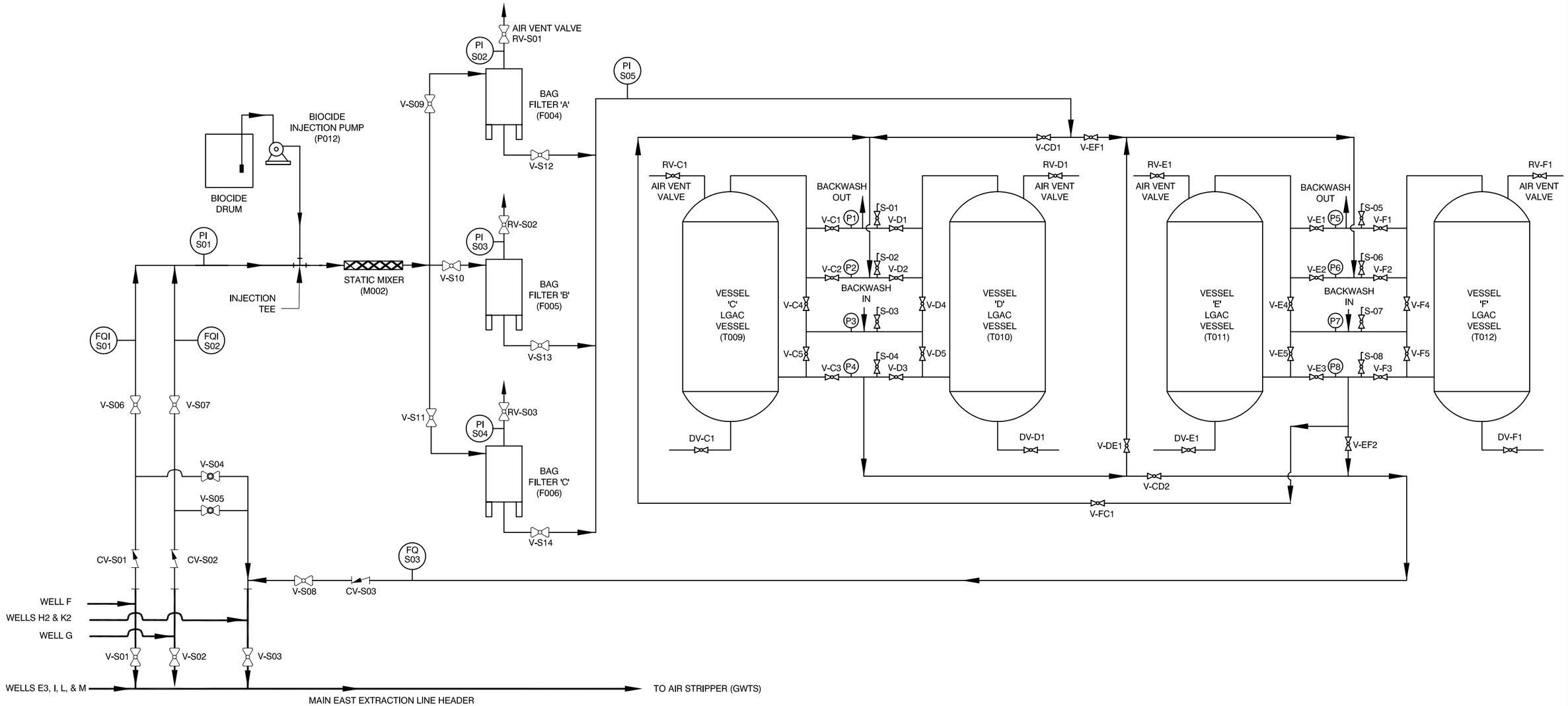

EXPLANATION

BALL VALVE	PI — PRESSURE GAUGE
CHECK VALVE	FQ — FLOW TOTALIZER
GLOBE VALVE	FQI — FLOW INDICATOR TOTALIZER
S — SAMPLING PORT	

FIGURE 4

SELECTED WELLHEAD TREATMENT (SWT) PROCESS FLOW DIAGRAM

GROUND WATER TREATMENT SYSTEM
HENDERSON, NEVADA

e2 environmental

MWs and GWTS Components.mxd 04/27/2008

Air Photo date: Spring 2006

0 250 500 Feet

FIGURE 5.
MONITOR WELLS AND GROUNDWATER TREATMENT SYSTEM COMPONENTS

HARGIS + ASSOCIATES, INC.
HYDROGEOLOGY • ENGINEERING

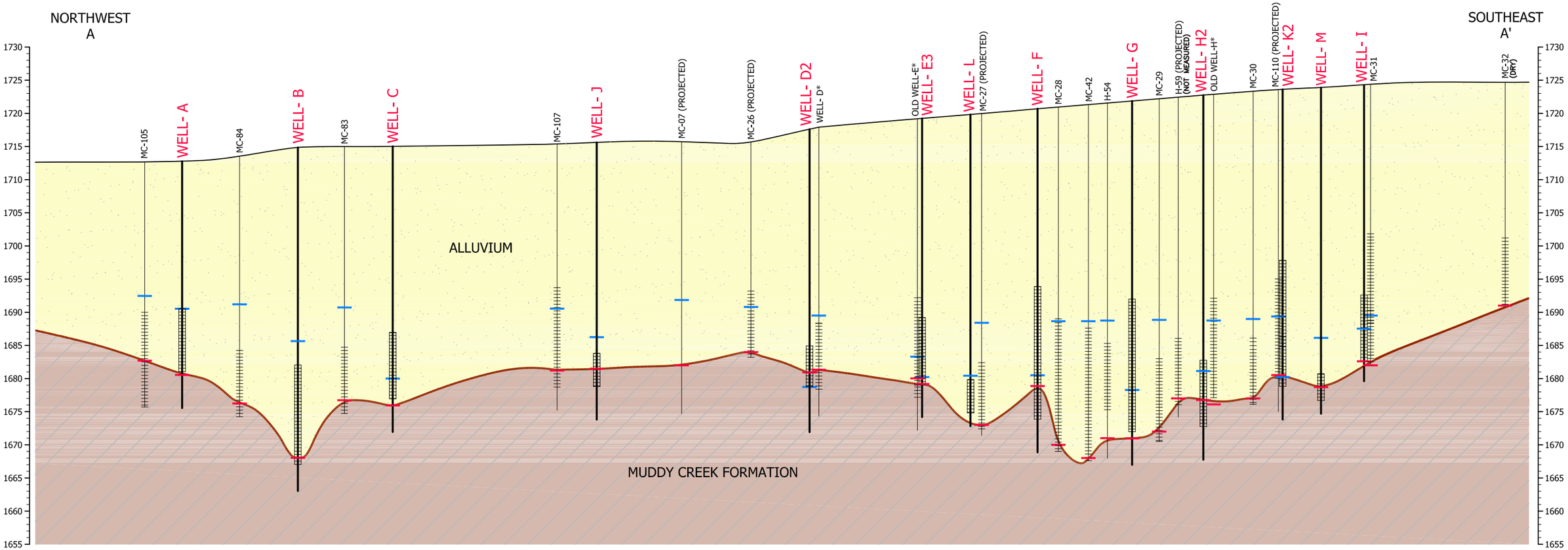

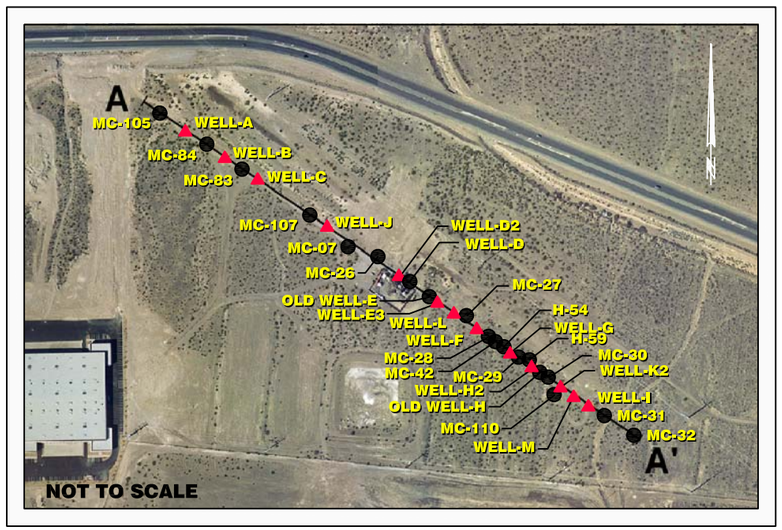

CROSS SECTION LOCATION

EXPLANATION

- QUATERNARY ALLUVIUM
- TERTIARY MUDDY CREEK FORMATION
- APPROXIMATE GROUND SURFACE
- APPROXIMATE CONTACT
- MONITOR WELL
- EXTRACTION WELL
- * DENOTES INACTIVE EXTRACTION WELL

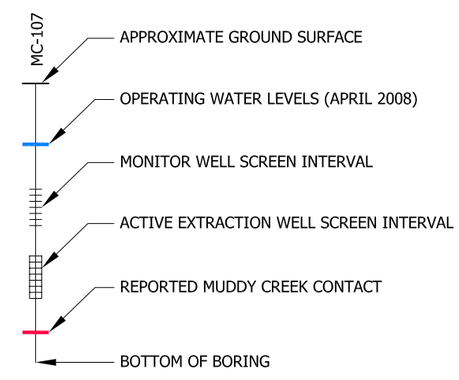

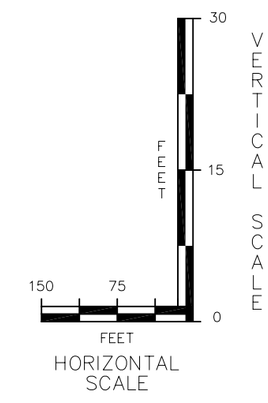

Jul 30, 2008 – 9:53am ADE – T:\2008\1000-1100\1012 Henderson\Hydrogeology\X-Sections\310-0864.dwg

HARGIS + ASSOCIATES, INC.
Hydrogeology/Engineering

07/08	RPT NO. 1012.01	310-0864	A

FIGURE 6. HYDROGEOLOGIC CROSS-SECTION A-A' AT THE GROUNDWATER TREATMENT SYSTEM

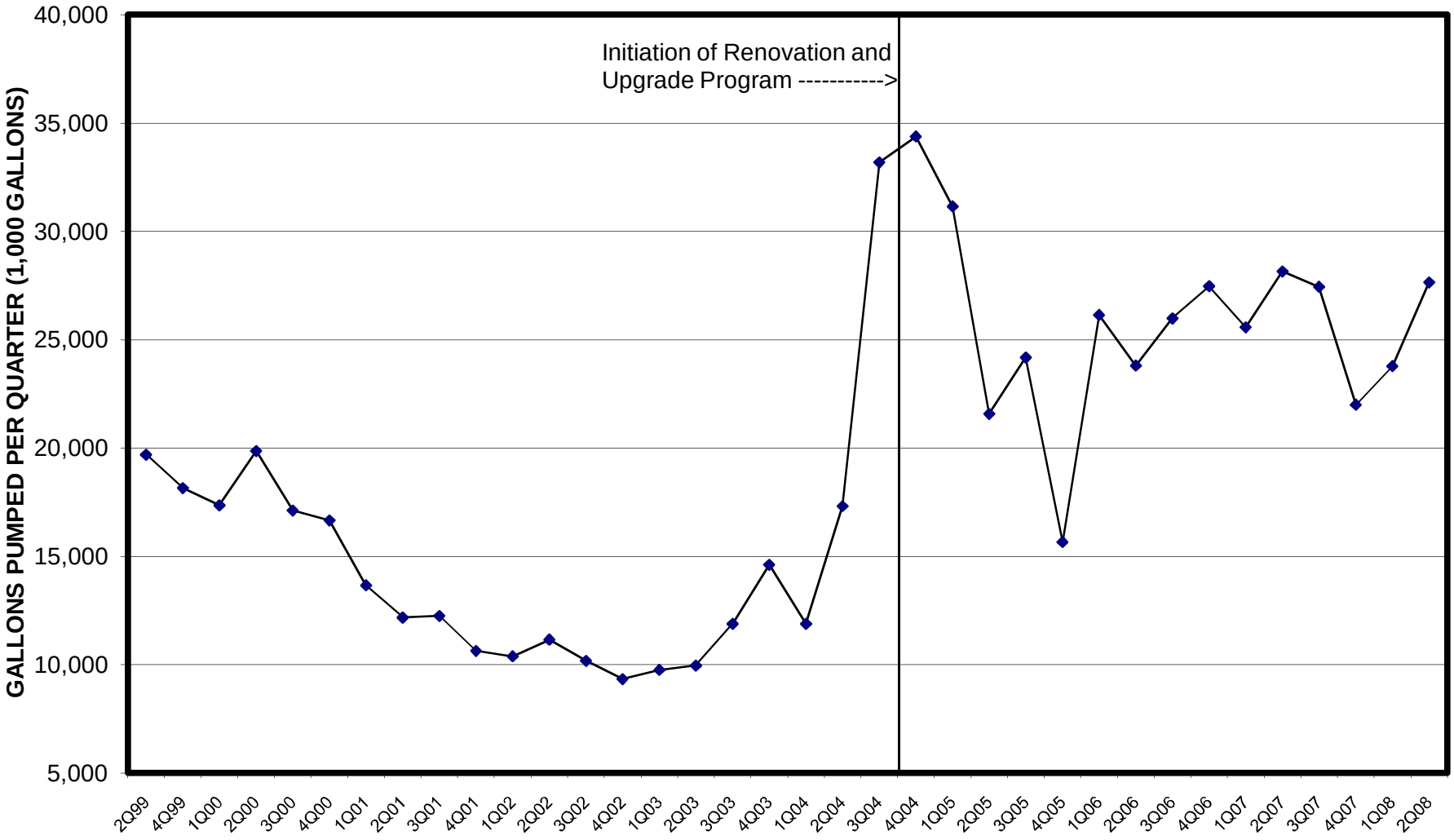

HARGIS + ASSOCIATES, INC.
HYDROGEOLOGY • ENGINEERING

FIGURE 7. VOLUME OF GROUNDWATER PROCESSED

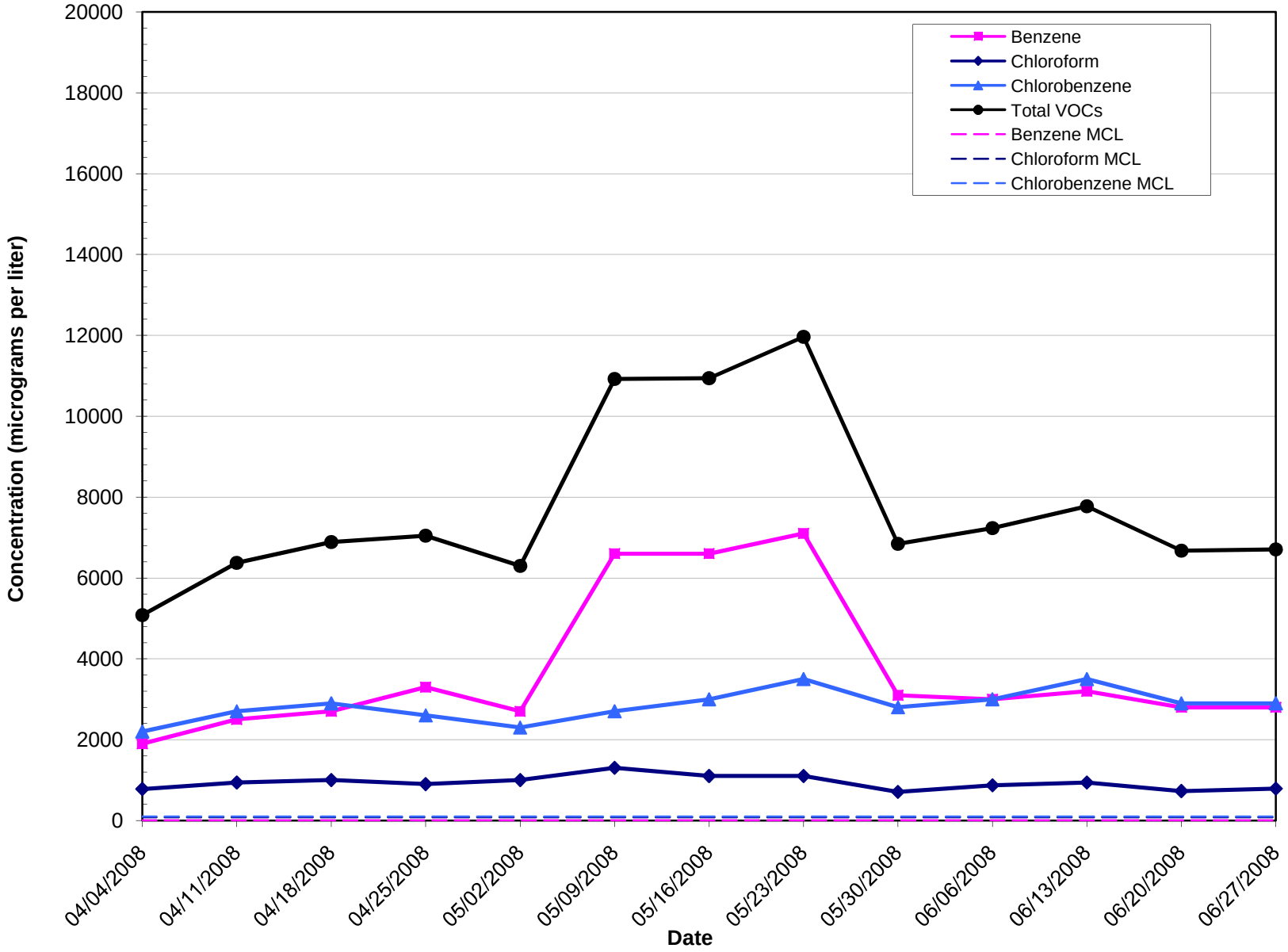

HARGIS + ASSOCIATES, INC.
HYDROGEOLOGY • ENGINEERING

FIGURE 8. CONCENTRATIONS OF VOLATILE ORGANIC COMPOUNDS, AIR STRIPPER INFLUENT, SECOND QUARTER 2008

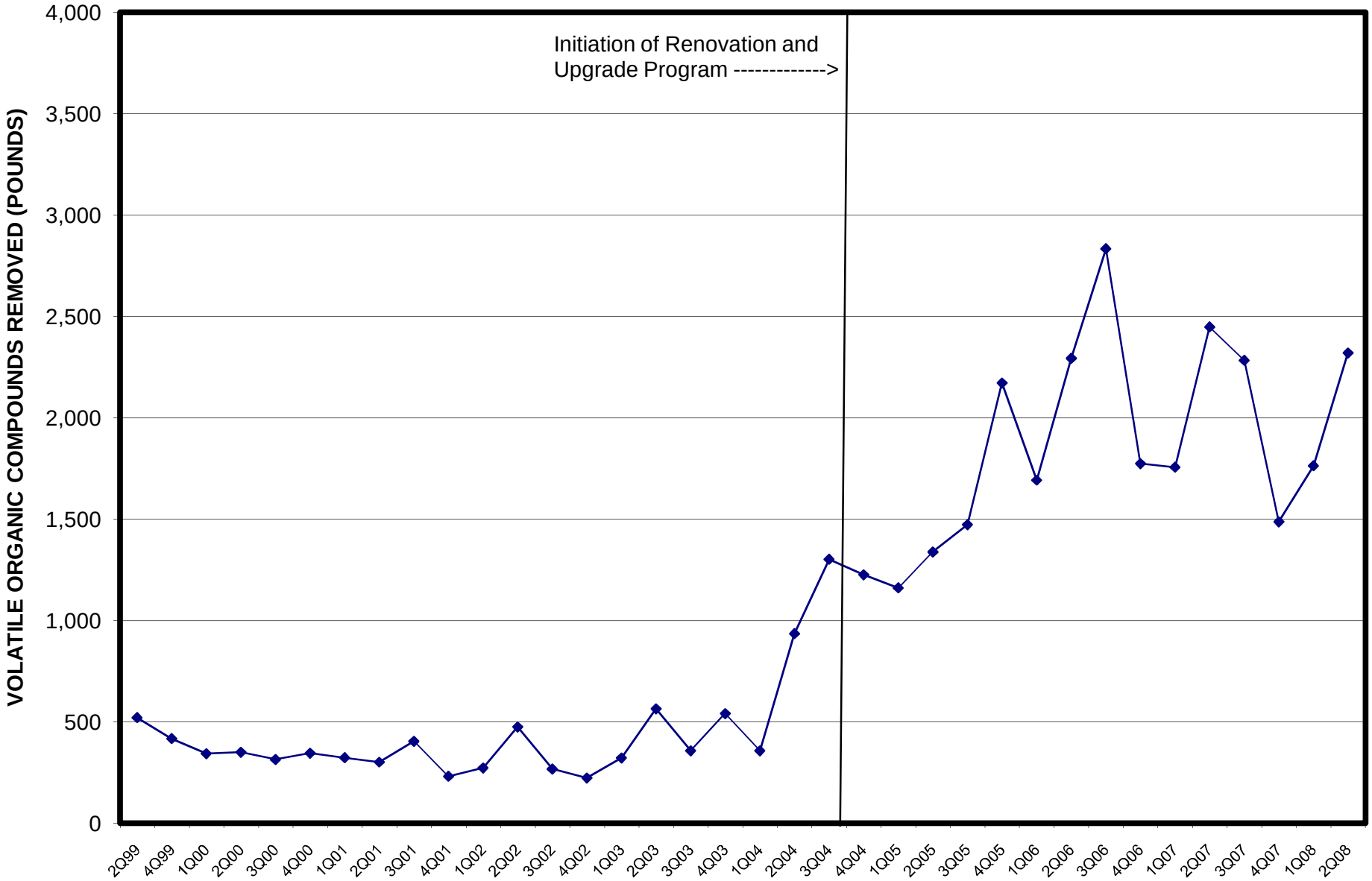

HARGIS + ASSOCIATES, INC.
HYDROGEOLOGY • ENGINEERING

FIGURE 9. VOLATILE ORGANIC COMPOUND MASS REMOVAL

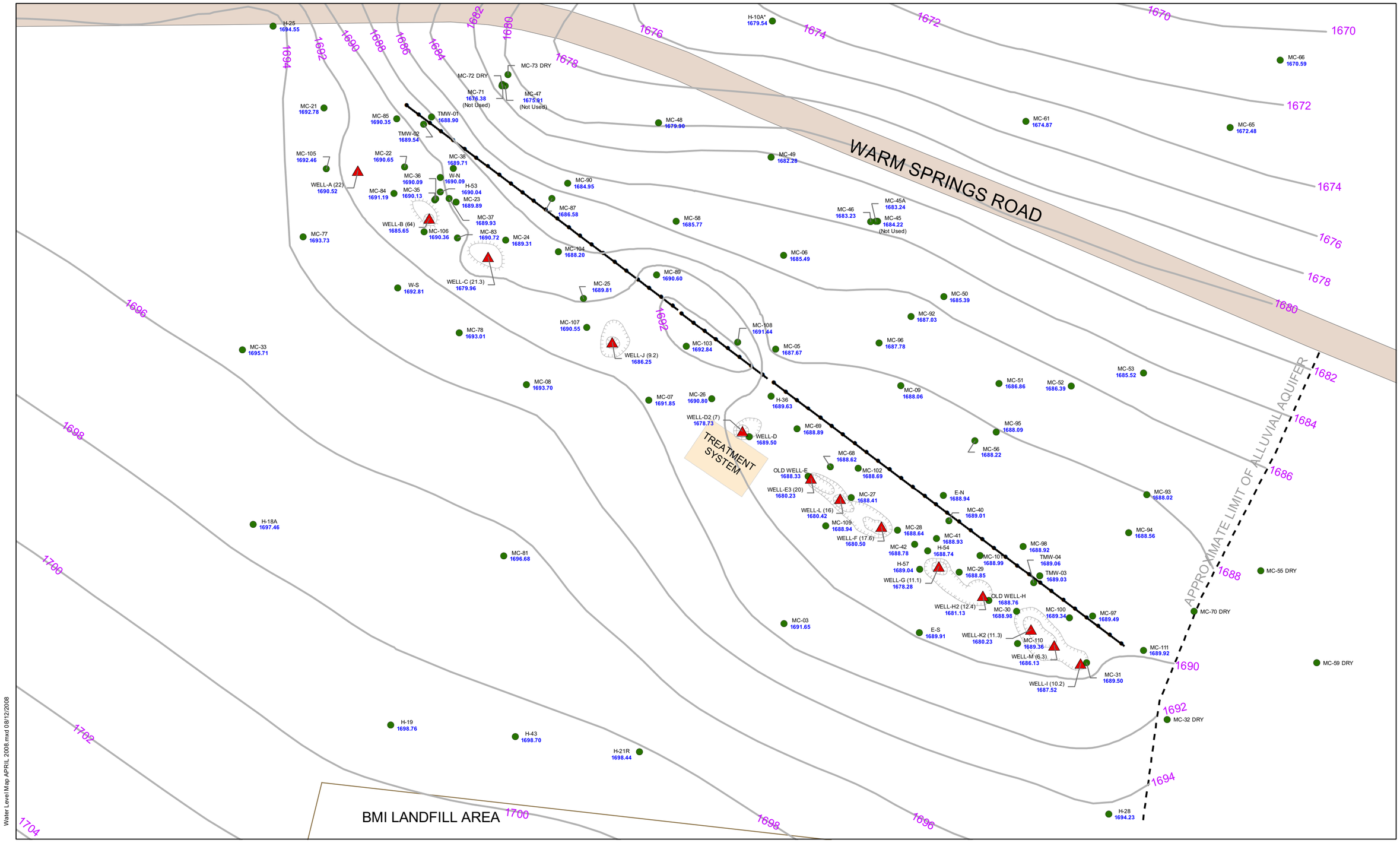

Water Level Map APRIL 2008.mxd 08/12/2008

EXPLANATION

- MONITOR WELL
- EXTRACTION WELL
- 1680 WATER LEVEL CONTOURS, IN FEET ABOVE MEAN SEA LEVEL (DEPRESSION CONTOURS INDICATED BY HASH MARKS)
- RECHARGE TRENCH LOCATIONS
- PAVED ROAD

H-19 1698.76 — Well Identifier; Water Level Elevation, in feet above mean sea level

WELL-J (9.2) 1686.25 — Well Identifier (pumping rate in gallons per minute on April 1, 2008); Water Level Elevation, in feet above mean sea level

N

0 75 150 300 Feet

FIGURE 10.
WATER LEVELS
APRIL 1 - 7, 2008

HARGIS + ASSOCIATES, INC.
HYDROGEOLOGY • ENGINEERING

* = anomalous measurement, not used in contouring

Notes: Total wellfield flow rate approximately 228 gallons per minute (gpm) on April 1, 2008.
107 gpm was directed to western recharge trench, 45 gpm was directed to the center trench, and 76 gpm was directed to the eastern recharge trench.