NEVADA DIVISION OF
ENVIRONMENTAL PROTECTION

STATE OF NEVADA
Department of Conservation & Natural Resources
Brian Sandoval, Governor
Leo M. Drozdoff, P.E., Director
Colleen Cripps, Ph.D., Administrator

April 13, 2015

Michael Rojo
Environmental Services, Supervisor
NV Energy
6226 W Sahara Ave M/S 30
Las Vegas, NV 89146

Re: **NV Energy (NVE)**
Reid Gardner Station (RGS)
NDEP Facility ID #H-000530
Nevada Division of Environmental Protection (NDEP) Response to Comments Concurrence:
Muddy River Investigation Work Plan, Administrative Order on Consent Activities, NV Energy, Reid Gardner Station, Draft April 2015

Dear Mr. Rojo:

The NDEP has received and reviewed NVE's submittal of the Response to Comments and the revised April 2015 Draft Work Plan titled *Muddy River Investigation Work Plan* (Work Plan). The Work Plan was received by the NDEP on April 6, 2015. The NDEP has reviewed the Work Plan and the Document and Response to Comments Tracking Form for the subject Work Plan. The comments appear to be adequately addressed and the NDEP has no further comments at this time. The NDEP **concurs** with the work plan.

Please contact me with any questions or comments about this letter at (775) 687-9396 or aoakley@ndep.nv.gov.

Sincerely,

Alison Oakley, CEM
Environmental Scientist III
Bureau of Corrective Actions
NDEP-Carson City Office

ec: Jeff Collins, Nevada Division of Environmental Protection (NDEP)
Scott Smale, Bureau of Corrective Actions, NDEP Carson City
Todd Croft, Bureau of Corrective Actions, NDEP Las Vegas
Bill Campbell, Tribal Liaison, NDEP
Alan Tiney, Bureau of Water Pollution Control, NDEP
Ebrahim Juma, Clean Water Team (ejuma@cleanwaterteam.com)
Joe Leedy, Clean Water Team (jleedy@cleanwaterteam.com)
Lynn M. Cintron, Southern Nevada Health District, (cintron@snhdmail.org)
Jacqueline Reszetar, Director of Envi. Health, Southern Nevada Health District reszetar@snhdmail.org
Brian Northam, Southern Nevada Health District, (northam@snhdmail.org)
Walter Ross, Environmental Health Supervisor/Engineer (Ross@snhdmail.org)
Andy Chaney, Southern Nevada Health District, (chaney@snhdmail.org)
Donna Houston, Southern Nevada Health District, (houston@snhdmail.org)
Starla Lacy, NV Energy (SLacy@nvenergy.com)
Darren Patten, NV Energy (DPatten@nvenergy.com)
Tony Garcia, NV Energy (TGarcia@nvenergy.com)
Michael Rojo, NV Energy (MRojo@nvenergy.com)
Jason Reed, NV Energy (JReed@nvenergy.com)
Becky Svatos, Stanley Consultants, Inc., (SvatosBecky@stanleygroup.com)
William Carrig, Stanley Consultants, Inc., (CarrigBill@stanleygroup.com)
John Kivett, ARCADIS U.S., Inc., (John.Kivett@arcadis-us.com)
Brad Cross, ARCADIS U.S., Inc., (Brad.Cross@arcadis-us.com)
Elliott Lips, Great Basin Earth Science, (elips@gbearthscience.com)
Andrea Issod, Sierra Club, (andrea.issod@sierraclub.org)
Robert Wiygul, Counsel Sierra Club and Moapa Band of Piutes, (Robert@waltzerlaw.com)
Ranajit Sahu, Consultant, (sahuron@earthlink.com)

cc: Alteha Tom, Moapa Band of Paiutes, Chairperson, P.O. Box 340, Moapa, NV 89025
Darren Daboda, Moapa Band of Paiutes, Environmental Director, P.O. Box 340, Moapa, NV 89025
Clark County Emergency Management, 500 S. Grand Central Parkway 6th Floor, P.O. Box 551713, Las Vegas, NV 89155-1713
Anitha Rednam, Department of Water Resources, 1416 9th Street, Room 1140, Sacramento CA 95814

Document and Response to Comments Tracking Form
NV Energy – Reid Gardner Station
Administrative Order On Consent Implementation

Document Title Muddy River Investigation Work Plan, Administrative Order on Consent Activities, NV Energy, Reid Gardner Station

Preparer Stanley Consultants

Draft #1

To NDEP

From NV Energy

Submittal Date January 2015

Comment Date February 13, 2015

Response Date April 3, 2015

Commenter Alison Oakley

Responder Mike Rojo

General Comment #1

The Muddy River Investigation Work Plan (Work Plan) should include a data management plan. The Work Plan calls for the collection of a significant amount of data including continuous monitoring data. The Work Plan should summarize how these data will be compiled, reviewed and reported. Additionally, NDEP recommends that the data management plan provide for an up-front streamlined sharing of the data with NDEP in the spirit of a dynamic work plan. Early and frequent review of the data will help ensure that the data collected are adequate and will support development of the conceptual site model. This will allow for a meaningful evaluation of the program as it progresses through the year and also allow for any adjustment to be identified and implemented early, if needed. These data should include monthly updates of all field measurements taken and downloaded as well as any draft analytical data.

Note: While an overall data management plan is preferable, alternate methods may be proposed to enable the exchange format in a less formal way if it gets to the endpoint more quickly.

General Comment #1 Response

Section 5 has been revised to include a data management approach that describes how data will be compiled, reviewed, and reported. Additionally, this section provides a "streamlined" data sharing approach that includes weekly data reports to NDEP. The weekly reports include field measurements taken as well as draft analytical data when available. The PA2, PA3, and PA5 through 7 Work Plans will also include similar data management approaches.

Comment #1

<u>Section 2.3.2, Page 2-4, Table 2-1:</u>
a. As described in Section 2.3, plans for continuous groundwater elevation and water quality (temperature and conductivity) measurements using transducers in wells situated on the north and south sides of the Muddy River at transects T-1, 3, 5, 6, 8, and 11 are generally appropriate. However, to provide additional information to assess the potential for preferential flow in the area between Pond 4C-2 and the IMW-2.5 well cluster (i.e., underflow from the Pond 4C-2 area beneath and to the north of the Muddy River), please include a similar scope for continuous groundwater elevation and water quality monitoring and the T-2 transect location.

b. The area between planned continuous monitoring at transect T-8 and T-11 is rather large and contains several site features that may be contributing TDS to the Muddy River, including the SGSPR spring location and the coal pile areas on the north side of the Muddy River, and potential underflow from the EFG pond areas and the dairy property on the south side of the Muddy River. To provide better data resolution and assessment of potential contributions to the Muddy River in the area between transect T-8 and T-11, please include continuous monitoring of groundwater elevations and water quality at transect T-9.

Response #1

Applicable sections of the Work Plan were revised to include continuous monitoring of surface water elevations, groundwater elevations, and water quality (temperature and conductivity) at transects T-2 and T-9.

Comment #2

<u>Sec. 2.4.1, Page 2-6, Transducer Housings:</u> - The PVC housings for river transducers need to be carefully installed so that they are very secure and vertical. Any shifts over time will jeopardize the water level readings recorded by the transducers, and if the transducers do not hang freely in the PVC housing, the transducer may give erroneous readings by getting hung up against the PVC.

Response #2

Comment noted. Installation of the PVC housings was completed in February 2015. The housings were installed vertically to the satisfaction of an Arcadis representative who provided field oversight during completion of the work. NV Energy will monitor the PVC housings for shifts over the next year and make adjustments, if necessary. The Work Plan was not changed.

Comment #3

Sec. 2.4.1, Page 2-6, Transducer Sync: - It is critical that the transducers are synced and set so that they all collect simultaneous readings and each measurement has the identical time stamp as readings from all the other transducers. This is necessary for working with and interpreting the data. The internal clocks on the transducers have a tendency to wander over time, so they'll need to be re-synced during each monthly manual check/data download.

Note: NVE may want to consider having additional trolls available for the monthly events in the event equipment is lost or damaged, it can be replaced with the need for an additional field event, or a 1 month data gap in readings.

Response #3

The following wording was added to Section 2.4.1 and as a footnote to Table 3-2, which is consistent with the manufacturers' instructions: "All transducers will be synced and set so that they collect simultaneous readings and each measurement has the identical time stamp as readings from the other transducers. All of the transducers will be programmed from one field computer prior to deployment, and the time will be synced to that computer. Monthly, the data will be downloaded to this computer and the time will be re-synced."

NV Energy will purchase a spare Troll to have on hand; no changes to the Work Plan were made to address this comment.

Comment #4

<u>Section 2.4.2, Page 2-6, Table 2-2:</u>

a. Verify detection limit for cadmium using EPA method 6020. Our experience is that Method 6020 provides detection limits on the order of 0.5 ug/L (ppb), which is in the same order of magnitude of the aquatic life criteria for cadmium.

b. Verify detection limit for alkalinity. The detection limit listed in the table seems to be too high. Detection limits of 1 to 5 mg/L are routinely achieved by standard alkalinity analytical methods.

Response #4

The laboratory verified that they can meet reporting limits of 6.0 mg/L for Alkalinity and 0.0010 mg/L for Cadmium. This change is reflected on Table 2-2. There have been other revisions to the target method reporting limits and analytical methods in Table 2-2 based on receipt of additional information from the laboratory.

Comment #5

<u>Section 5:</u> - The work plan does not present information regarding laboratory analyses of groundwater samples that may be collected from the newly installed and existing monitoring wells located at the transects along the Muddy River. Section 5 indicates that water quality data collected during quarterly monitoring events and the pond area investigations will be used for estimating TDS mass flux to the Muddy River and to address geochemical data gaps. It is assumed that the forthcoming Pond Area work plans will include details regarding specific analytes that will be collected during the quarterly monitoring events and the Pond Area investigations to support these evaluations, but this information should be explicitly stated in this work plan.

Response #5

Revisions were made to Section 2.3.4 to clarify that the Muddy River Investigation includes collection of field pH, specific conductance, temperature, water level, and TDS data at all new Muddy River wells (both 2-inch and 4-inch diameter monitoring wells) following development. Additionally, the work plan clarifies that a second set of groundwater samples will be collected from the newly installed four-inch monitoring wells in September 2015, coincident with the second 2015 semi-annual groundwater monitoring event, and submitted for laboratory analysis in accordance with the PA2, PA3, and PA5 through 7 Work Plans.

Additional Changes:

Revisions were made to Sections 2.2 and 2.4.2 to clarify that stakes were only installed on one side of each transect and a staff gauge was also installed at each transect.

Revisions were made to Section 2.3.1 to add a reference to manufacturer information in Appendix B.

Table 2-1 was revised to indicate that MW-20S is on the north side of the river.

Section 2.3.2 was revised to include references to ASTM D6914-04 (Standard Practice for Sonic Drilling and Site Characterization and the Installation of Subsurface Monitoring Devices) and ASTM D2488 (Standard Practice for Description and Identification of Soils [Visual-Manual Procedure]) as well as detail the retention of soil cores for one year for future observation and to delete the reference to use of a track-mounted sonic drilling rig because a track-mounted sonic rig may not be used at all drilling locations.

Section 2.4.1 was revised to clarify that the PVC pipe installed in the river is not slotted; it has holes in it.

Section 2.4.3.1 was revised to clarify that river flow will be measured at all 11 transects on a quarterly basis for one year during dry weather.

Section 2.4.3.1 has been revised to clarify that the distance between flow measurement stations is set by dividing the river width by 20 such that the stations are between six and twelve inches apart.

Section 2.4.3.3 has been revised to clarify that the South Gate Spring flow is measured where it discharges to the river, not necessarily at the end of the culvert.

Section 3.1 has been revised to clarify that the frequency of QC sample collection is based on the combined field activities occurring at any given time during the implementation of the MRI, PA2, PA3, and PA5 through 7 Work Plans.

Section 3.1 was revised to include HPT QA procedures.

Section 3.2 was revised to include field equipment calibration information for the instruments that will be used to test groundwater samples collected following well development.

Section 4 was revised to include the following language, "However, if the modification is deemed to have a potentially significant impact on the investigation objectives, work will stop until the NDEP or their representative can be consulted regarding the changes. If concurrence to the modifications to the MRI Work Plan cannot be reached, NV Energy ~~reserves the right~~ may decide to proceed at risk knowing that NDEP may not agree to ~~using~~ use of the data for decision making purposes."

Table 6-1 was revised to clarify that the quarterly monitoring events will be in March, June, September, and December 2015.

Final

To _____ From _____

Submittal Date _____ Approval Date _____

Approver _____

NVEnergy

April 2, 2015

Nevada Division of Environmental Protection
NDEP – Bureau of Corrective Actions
901 S Stewart St
Carson City, NV 89701
Attn: Alison Oakley

Dear Alison:

Subject: NV Energy
Reid Gardner Station
Draft Muddy River Investigation Work Plan

NV Energy is pleased to provide the Revised Draft Muddy River Work Plan dated April 2015 and the associated Document and Response to Comments Tracking Form based on NDEP comments dated February 13, 2015. To accommodate field work associated with implementation of the Work Plan, NV Energy requests comments from NDEP as soon as possible.

If you have any questions regarding the enclosed report, please contact me at 702-402-1319.

Sincerely,

Michael Rojo
Supervisor, Environmental Services
Reid Gardner Station

CC: William Campbell, NDEP (electronic copy via FilesAnywhere)
Michael Rojo, NV Energy
Tony Garcia, NV Energy (three copies)
John Kivett, ARCADIS U.S., Inc.
Bob Forsberg, ARCADIS U.S., Inc.

Muddy River Investigation Work Plan
Administrative Order on Consent Activities

NV Energy
Reid Gardner Station

Final
May 2015
20618.09

Stanley Consultants INC.
A Stanley Group Company
Engineering, Environmental and Construction Services - Worldwide

Certifications

NV Energy Certification

I certify that this document and all attachments submitted to the Division were prepared under the direction or supervision of NV Energy in accordance with a system designed to gather and evaluate the information by appropriately qualified personnel. Based on my inquiry of the person or persons who manage the system(s) or those directly responsible for gathering the information, or the immediate supervisor of such person(s), the information submitted and provided by NV Energy is, to the best of my knowledge and belief, true, accurate, and complete in all material respects. I am aware that there are significant penalties for submitting false information, including the possibility of fine and imprisonment for knowing violations.

Signature:	James D. Hopper Jr.
Name:	Don Hopper
Title:	Plant Director, Reid Gardner Station
Company:	NV Energy
Date:	4/2/2015

Certified Environmental Manager Certification

I hereby certify that I am responsible for the services described in this document and for the preparation of this document. The services described in this document have been provided in a manner consistent with the current standards of the profession and to the best of my knowledge comply with all applicable federal, state and local statutes, regulations and ordinances.

Signature: Rebecca L Svatos
Name: Rebecca L. Svatos
Title: Project Manager
Company: Stanley Consultants
Date: 4/1/15
EM Certificate Number: EM-1931
EM Expiration Date: 9/30/2015

Table of Contents

Certifications i

Section 1 - Objectives 1-1

Section 2 - Field Investigations 2-1
2.1 Investigation Team 2-1
2.2 Surveying 2-1
2.3 Groundwater Investigations 2-2
2.3.1 Hydraulic Profiling Tool and Two-Inch Monitoring Well Installation 2-3
2.3.2 Four-Inch Monitoring Well Installation 2-4
2.3.3 Groundwater Elevation Measurement 2-5
2.3.4 Groundwater Parameter Measurement 2-6
2.3.5 MicroWells 2-6
2.4 Surface Water Investigations 2-6
2.4.1 Surface Water Elevation Measurement 2-6
2.4.2 Surface Water Measurement and Sampling 2-7
2.4.3 Surface Water Flow Measurement 2-9
2.4.3.1 Muddy River 2-9
2.4.3.2 Dairy Diversion 2-9
2.4.3.3 South Gate Spring 2-9
2.5 Visual Sediment Classification 2-10
2.6 Visual River Bank Observations 2-10
2.7 Sample Containers, Preservation, and Storage 2-10
2.8 Field Documentation 2-10
2.9 Decontamination 2-10
2.10 Investigation-Derived Waste 2-10

Section 3 - Quality Control 3-1
3.1 Quality Control Samples - Water 3-1
3.2 Field Equipment Calibration 3-3
3.3 Data Usability/Validation 3-4

Section 4 - Field Variances 4-1

Section 5 - Data Evaluation 5-1
5.1 Data Management 5-2
Section 6 - Schedule.....6-1
Section 7 - References 7-1
Section 8 - Acronyms and Abbreviations 8-1

TABLES

Table 2-1 Muddy River Investigation Monitoring Wells 2-4
Table 2-2 Surface Water Quality Monitoring Parameters 2-8
Table 3-1 QC Sampling and Analysis Summary 3-1
Table 3-2 Field Equipment Calibration Frequency.....3-3
Table 6-1 Proposed Field Activities Schedule.....6-1

APPENDICES

Appendix A - Proposed Muddy River Investigation Work Plan Sampling Locations Figure.....A-1
Appendix B - Manufacturer's Information B-1

Section 1

Objectives

NV Energy and the Nevada Division of Environmental Protection (NDEP) entered into an Administrative Order on Consent (AOC) for the Reid Gardner Generating Station (Site) near Moapa, Nevada on February 22, 2008. The AOC calls for NV Energy to continue with environmental contaminant characterization activities and to identify clean-up measures, as necessary, for soil and groundwater at the Site. As part of the AOC implementation, NV Energy will be conducting multiple field investigations along the Muddy River and in the pond source areas during 2015. This document describes the Muddy River Investigation (MRI) Work Plan. The pond area work plans that will be subsequently submitted include the following:

- PA2 – Ponds 4B/4C Groundwater and Soil Characterization Work Plan
- PA3 – Pond 4A Groundwater and Soil Characterization Work Plan
- PA5, PA6, PA7 – Ponds D/E/F/G Groundwater and Soil Characterization Work Plan

These work plans include groundwater and soil investigations in and around the pond areas. Because the investigation areas are adjacent to each other, some of the characterization activities identified in this MRI Work Plan will address MRI objectives as well as objectives for one or more of the pond area characterization work plans. Activities that fulfill multiple work plan objectives are identified in Section 2.

The overall objective of this MRI Work Plan is to evaluate the interaction between the Muddy River and the Alluvial Aquifer in the area of the Site. Specific objectives are as follows:

1. Identify where the Muddy River is gaining and losing (i.e., where groundwater is flowing into the river or water is flowing from the river to groundwater).

2. Evaluate variability in gaining and losing conditions in the Muddy River associated with seasonal changes and other natural events.

3. Evaluate variability in water quality in the Muddy River due to seasonal changes and other natural events.

4. Estimate the mass flux of Total Dissolved Solids (TDS) from the Site to the Muddy River.

5. Address geochemical data gaps related to potential groundwater/surface water interaction.

The Muddy River is a potential receptor for affected groundwater from the Site. If there is a meaningful pathway from the affected groundwater at the Site to the Muddy River, and if the river is impacted above levels of regulatory concern, corrective action may be necessary. The objective for the data collected during this investigation is for it to be robust enough to support corrective action planning. To meet this objective, analytical data collected and analyzed when implementing this Work Plan will comply with the NDEP-approved Quality Assurance Project Plan (QAPP or NV Energy QAPP) (Stanley Consultants, 2011).

Section 2

Field Investigations

The MRI field work includes surveying, groundwater investigations, surface water data collection, and visual classification of river sediments. Field work will begin in February 2015 and well installation is expected to occur in March/April 2015, followed by regular (e.g., monthly, quarterly, or semi-annually), and in some cases continuous, data collection through March 2016. Figure 1 in Appendix A presents the proposed MRI field investigation locations along with the existing Discharge Monitoring Report (DMR) surface water sampling locations and existing monitoring well locations that will be used for reference in evaluating data collected during the implementation of the MRI Work Plan. The following paragraphs describe the MRI field activities.

2.1 Investigation Team

During the MRI implementation, the Stanley Consultants Project Lead will be responsible for completing the work in accordance with this Work Plan. The Stanley Consultants Field Team Leader will be responsible for each field activity and will report to the Project Lead. Utility clearance and drilling/monitoring well installation will be performed by others contracted by NV Energy. Stanley Consultants will conduct the surveying of the river transects while NV Energy will survey monitoring wells installed as part of this Work Plan. Veritas Laboratories (and subcontracted laboratories) will perform laboratory analyses and data validation will be performed by Ordway and Associates, a subcontractor to Stanley Consultants. OGI will collect groundwater samples from newly installed monitoring wells as part of the second semi-annual groundwater monitoring event in September 2015.

2.2 Surveying

Stanley Consultants will survey 11 transects across the Muddy River to better define the river geometry, particularly in relation to the groundwater table. Ten transects are located in the area of the evaporation ponds (T-1 through T-10), and one transect is located downstream (T-11), as shown on Figure 1 in Appendix A. NV Energy will hire a subcontractor to clear vegetation in the

areas of the transects prior to the surveying to provide access to the river. At each transect location, the following surveying will be conducted:

- Top of river banks
- Width of the river channel
- Surface water elevation
- Profile of the river channel bottom (to top of soft sediment) at major changes in elevations (at a minimum, toe of both banks and center)
- Depth of river sediments (at three locations per transect)

At each transect, stakes (fence posts) will be installed to mark the transect locations. At eight locations (T-1, T-2, T-3, T-5, T-6, T-8, T-9, and T-11), polyvinyl chloride (PVC) pipe with holes will be installed in the edge of the river to hold transducers for continuous surface water elevation measurement. In addition, a staff gauge will be installed on another stake in the river. The stakes will be driven in the ground securely to keep the PVC pipe and staff gauge from moving and will be surveyed to use as benchmarks for measuring water surface elevation. At the other three locations (T-4, T-7, and T-10), staff gauges will be installed for manually measuring surface water elevations on a monthly basis.

The thickness of the river sediments will be estimated at each transect by measuring the top and bottom of the soft river sediments, where present. A layout rod will be placed on the top of sediments and then pushed to the firm river channel bottom.

Elevations will also be surveyed at locations where flows enter or exit the Muddy River. These locations were surveyed prior to the September 8, 2014, flood, and need to be re-surveyed. These locations include:

- South Gate Spring - pipe invert at inlet (within fenced area) and outlet to the Muddy River
- Culvert under haul road (MR25.4) – invert elevations, inlet and outlet
- Dairy Diversion flume elevations
- Dairy Diversion Dam – elevation of top of structure

The locations of the new monitoring wells installed along the Muddy River will be surveyed by NV Energy surveyors consistent with the previous monitoring well surveying at the Site. In addition to surveying the horizontal locations, the ground surface elevation and north side of the top of casing (TOC) at each well will be surveyed.

All surveying will tie into the existing Site coordinate system and the data will be provided electronically by the surveyors so it can be integrated into the AOC Geographic Information System (GIS).

2.3 Groundwater Investigations

In order to measure groundwater levels and compare them with surface water levels at each of the 11 transects, shallow wells will be installed on either side of each transect. Some of these shallow wells will be two-inch diameter monitoring wells installed with a hydraulic profiling tool (HPT). Others, however, will be four-inch diameter monitoring wells installed by sonic drilling

at varying depths to support the pond area groundwater characterization activities as well as the objectives for the MRI Work Plan. The installation and monitoring of these wells are described in the following paragraphs.

2.3.1 Hydraulic Profiling Tool and Two-Inch Monitoring Well Installation

The HPT will be advanced at each location to evaluate the geology in accordance with the manufacturer's information in Appendix B. The HPT is a logging probe that continuously measures the pressure required to inject a constant flow of water into adjacent soil as the probe is advanced at a constant rate into the subsurface. The injection pressure log that is created is then used to correlate to formation permeability. During the MRI, the injection pressure log will be used to infer hydrostratigraphy, including zones of relatively higher permeability that may represent potential preferential migration pathways for groundwater. The HPT probe will also measure and record electrical conductivity (EC); however, given the variability of TDS-affected groundwater at the Site, EC interpretation will need to consider both local geology and water quality.

Figure 1 shows the HPT locations proposed as part of the MRI Work Plan. The HPT will be advanced to the upper portion of the Muddy Creek Formation, anticipated to be at a depth of approximately 100 feet bgs, at MW-24S, HPT-MW-21, HPT-MW-20, HPT-MW-17, P-31S, HPT-P-30, HPT-P-27, KMW-23S, HPT-KMW-24, KMW-27S, and KMW-28S. At all other locations, the HPT will only be pushed to the depth required to install the monitoring well.

For quality control purposes, the first HPT boring will be advanced adjacent to an existing monitoring well with known lithology. The known lithology in the area will be used to better evaluate the EC log, injection pressure log, and other output from the HPT (i.e., hydrostatic pressures, hydraulic conductivity) and correlate it with the hydrostratigraphy. Discrete groundwater samples will be collected from the first HPT location and tested in the field for specific conductance to evaluate how the groundwater quality impacts the EC readings. In addition, discrete groundwater samples that have been tested in the field for specific conductance will be submitted to a laboratory for TDS analysis to establish an appropriate ratio of conductivity to TDS. The HPT operator will be required to provide EC calibration procedures. These quality control steps will be taken at other locations, as necessary, to ensure that the HPT logs are being evaluated properly and that water quality changes with depth and lithology are being monitored.

After completion, some HPT borings will be converted to two-inch diameter monitoring wells, or grouted to eliminate a potential conduit for groundwater migration. If the two-inch well is to be completed at a shallower depth, the hole will be filled with bentonite grout to the required elevation. Installation of two-inch diameter monitoring wells will be completed with the HPT in accordance with ASTM D6725. These wells will be completed with two-inch diameter schedule 40 PVC #10 (0.01 foot) slot screen, a three-foot riser pipe stickup and a locking cap. Pre-packed monitoring well screens will be installed with two feet of screen above the water table and eight feet of screen below the water table. Two-inch monitoring wells will be installed at the locations listed in Table 2-1.

NV Energy will contract with a drilling company to install HPTs and two-inch monitoring wells. The drilling contractor will perform a utility clearance for all proposed well locations,

including field locating and marking each drilling location, calling each drilling location into the North Underground Service Alert (USA), and meeting with relevant utility service staff in the field, if needed, to clear individual boring locations. In addition, each HPT location will be air-knifed to approximately six feet below ground surface (bgs) before drilling begins.

2.3.2 Four-Inch Monitoring Well Installation

New and existing monitoring wells will be used on each side of the 11 transects to allow collection of manual and continuous groundwater level and water quality measurements, as listed in Table 2-1 and shown on Figure 1 in Appendix A.

Table 2-1

Muddy River Investigation Monitoring Wells

Transect	Well on North Side of River (2-inch diameter)	Well on South Side of River (2-inch diameter)	Well on South Side of River (4-inch diameter)	Well on North Side of River (4-inch diameter)	Data Collection
T-1	MW-24S[a]	MW-23S			Continuous and Manual (Monthly)
T-2	MW-22S		MW-21S/M[a]		Continuous and Manual (Monthly)
T-3		MW-19S		MW-20S[a]	Continuous and Manual (Monthly)
T-4	MW-18S		MW-17S/M[a]		Manual (Monthly)
T-5	P-31S[a]		P-15AR (existing)		Continuous and Manual (Monthly)
T-6	P-29S		P-30S/M/D[a]		Continuous and Manual (Monthly)
T-7	P-28S		P-27S/M/D[a]		Manual (Monthly)
T-8	KMW-23S[a]	KMW-22S			Continuous and Manual (Monthly)
T-9	KMW-25S		KMW-24S/M/D[a]		Continuous and Manual (Monthly)
T-10	KMW-27S[a]	KMW-26S			Manual (Monthly)
T-11	KMW-29S	KMW-28S[a]			Continuous and Manual (Monthly)

Note: Only shallow monitoring wells, denoted with an "S" at the end of the well ID, are proposed as part of the Muddy River Investigation Work Plan. Monitoring wells MW-20M/D (if required), MW-21M, MW-17M, P-30M/D, P-27M/D, and KMW-24M/D will be proposed as part of PA2 PA3, and PA5-7 Groundwater and Soil Characterization Work Plans.

[a] HPT boring to be attempted to top of Muddy Creek Formation at this location.

NV Energy will contract with a drilling company to install the four-inch monitoring wells. The drilling contractor will perform a utility clearance for all proposed well locations, including field locating and marking each drilling location, calling each drilling location into the North Underground Service Alert (USA), and meeting with relevant utility service staff in the field, if needed, to clear individual boring locations. In addition, each boring location will be air-knifed to approximately six feet below ground surface (bgs) before drilling begins.

Shallow 4-inch diameter monitoring wells will be installed using a sonic drilling rig in accordance with ASTM Standard D6914-04, Standard Practice for Sonic Drilling and Site Characterization and the Installation of Subsurface Monitoring Devices. Sonic drilling will allow field geologists to observe continuous soil cores, which will be lithologically logged by the Unified Soil Classification System (USCS) in accordance with ASTM D2488. Soil cores (or chips) from the deepest boring at each location will be collected and stored, in sequence, in wooden boxes or other appropriate containers for one year for future observation. The cores will be removed from each drilling location upon completion of monitoring well installation activities and stored at a designated location at the Site.

Shallow 4-inch diameter monitoring wells will be set to a depth of approximately eight feet below the groundwater table. The depth-to-groundwater and screen target depths will be based on previously advanced HPTs at each location. A 4-inch-diameter PVC screen, comprised of ten feet of schedule 40 PVC #10 (0.01 ft) slotted screen, threaded, with "O-rings" between five- and ten-foot lengths, will be installed in the borehole. The annular space will be backfilled with #12 silica sand to two feet above the top of the screen. The slotted PVC will extend two feet above the water table and eight feet below the water table. A sanitary seal comprised of a minimum of two feet of hydrated bentonite chips or pellets will be installed on top of the sand. A bentonite grout-slurry will be installed on top of the seal and extend to the upper two feet of the schedule 40 PVC riser pipe, and a concrete cap will be placed around the pipe to keep the pipe from sinking. The well will be completed with at least three feet of stickup above grade with an expandable locking cap so that surface water will not enter the casing. Wells will be developed after installation in accordance with Standard Operating Procedure (SOP) 2044 in Appendix E of the approved NV Energy QAPP. Development water will be disposed on the ground adjacent to the well location.

2.3.3 Groundwater Elevation Measurement

Transducers (Aqua Troll® 200 or similar) will be installed in 16 wells located along transects T-1, 2, 3, 5, 6, 8, 9, and 11 (i.e., MW-23S, MW-24S, MW-22S, MW-21S, MW-19S, MW-20S, P-31S, P-15AR, P-29S, P-30S, KMW-22S, KMW-23S, KMW-24S, KMW-25S, KMW-28S, and KMW-29S; refer to Table 2-1) to continuously monitor water levels for one year. The transducers will collect data every fifteen minutes and the data will be downloaded monthly.

Groundwater levels will be manually measured at all 22 MRI transect wells on a monthly basis with a water level meter in accordance with SOP 2043 in Appendix E of the approved NV Energy QAPP. The monthly manual measurements at locations with transducers will be used to check transducer measurements.

2.3.4 Groundwater Parameter Measurement

Immediately following well development activities at all new MRI wells, an initial measurement of field pH, specific conductance, temperature, and water level will be recorded and a groundwater sample collected for TDS laboratory analysis.

Water quality probes (Aqua Troll® 200 or similar) will be installed in the 16 wells with transducers (see Section 2.3.3) along transects T-1, 2, 3, 5, 6, 8, 9, and 11 to continuously monitor water temperature and conductivity for one year (in addition to water level data as discussed above; refer to Table 2-1). The probes will collect data every fifteen minutes and the data will be downloaded monthly.

Field groundwater quality measurements will be made at all 22 MRI transect wells on a monthly basis using a YSI 556 Multi-Parameter meter or similar instrument to measure pH, conductivity, dissolved oxygen (DO), oxidation reduction potential (ORP), and temperature. The data collected from the YSI 556 Multi-Parameter meter will be compared with the Aqua Troll data, where available, to verify the Aqua Troll® data.

As part of the PA2, PA3, and PA5 through 7 Work Plans, groundwater samples will be collected from all new 4-inch MRI wells during the second semi-annual groundwater monitoring event in September 2015. These groundwater samples will be analyzed for field measurement of pH, specific conductance, temperature, turbidity, DO, ORP, dissolved iron (II), and dissolved manganese. In addition, the groundwater samples will be submitted for laboratory analyses in accordance with the PA2, PA3, and PA5 through 7 Work Plans.

2.3.5 MicroWells

Three MicroWells will be attempted at each of six transects (T-1, 3, 5, 6, 8, and 11) during the initial field investigations scheduled for February/March 2015 to possibly provide a qualitative indication of the gaining and loosing sections of the river. The MicroWells are 1/8-inch stainless steel push points that will be pushed at least one foot into the bottom of the river channel. After the push point is at the desired depth, the center rod of the push point is removed to allow water to enter the screened section of the push point. One end of the tubing is then attached to the top of the push point and the other end of the tubing is attached to a syringe or manual pump. The water level in the tubing will be above the river water level if the river is gaining at that location. After measuring the water level in the tubing, the MicroWell will be removed. The results will be evaluated after the first event to determine if additional MicroWell installations are recommended and at what frequency they would be conducted. Manufacturer's information on the use of MicroWells is provided in Appendix B.

2.4 Surface Water Investigations

2.4.1 Surface Water Elevation Measurement

Muddy River surface water elevations will be measured at all 11 transects for comparison with adjacent groundwater elevations. Transducers (Aqua Troll 200 or similar) will be installed at eight locations; T-1, 2, 3, 5, 6, 8, 9, and 11. The transducers will be secured at the edge of the river inside a PVC pipe with holes attached to a fence post. The transducers will continuously monitor surface water levels. The transducers will collect data every 15 minutes and the data will be downloaded monthly. Surface water level measurements will also be collected manually on a monthly basis from all 11 transect locations using the PVC

pipe with holes and/or the staff gauge attached to a fence post installed on the side of the river as a benchmark. These manual measurements will be used to verify the transducer measurements. All transducers will be synced and set so that they collect simultaneous readings and each measurement has the identical time stamp as readings from the other transducers. All of the transducers will be programmed from one field computer prior to deployment, and the time will be synced to that computer. Monthly, the data will be downloaded to this computer and the time will be re-synced.

2.4.2 Surface Water Measurement and Sampling

Water quality probes (Aqua Troll® 200 or similar) will be installed in the river at transects T-1, 2, 3, 5, 6, 8, 9, and 11 to continuously monitor temperature and conductivity for one year. Water quality data will be collected every 15 minutes and downloaded monthly. Probe locations will be selected to best represent river water quality.

Surface water field parameters (pH, temperature and conductivity) will be measured manually on a monthly basis for one year at all transect locations as well as at the Dairy Diversion Outflow (location DIV-1 on Figure 1) and the South Gate Spring pipe outfall (location SGSPR-PIPE-OUT on Figure 1). A disposable bailer attached to the end of a pole will be used to collect a sample from the middle of the river at each transect for analysis with a YSI 556 Multi-Parameter meter or similar instrument for pH, conductivity, and temperature. The temperature and conductivity data will be compared with Aqua Troll® data to verify the measurements. The same method will be employed for the Dairy Diversion Outflow and South Gate Spring pipe outfall; however, a bailer may not be needed.

On a quarterly basis, multiple field measurements of pH, temperature, and conductivity will be made in the river at each of the 11 transects to profile the water quality in each transect. A tape will be pulled across the river at each transect. Field measurements will be made at one-quarter, center, and three-quarters locations along each transect. At each of the three horizontal locations, two or three measurements will be made vertically in the river water column and one measurement will be made in the sediment, if possible.

Surface water samples for laboratory analysis will be collected quarterly for one year at six locations; T-1, 4, 6, 8, 10, and 11, as well as at the Dairy Diversion Outflow (location DIV-1 on Figure 1) and the South Gate Spring outfall (location SGSPR-PIPE-OUT on Figure 1). If possible, these sampling events will coincide with the Groundwater Minoring Program's semi-annual groundwater sampling events (March and September) and quarterly groundwater level monitoring events (June and December). Samples from the river will be collected from as close to the center of flow as possible with a disposable bailer attached to the end of a pole. Table 2-2 provides the parameters and methods for the sample analyses. Dissolved samples will be field filtered with a 0.45 micron filter.

Table 2-2

Surface Water Quality Monitoring Parameters

Parameters	Analytical Method	Target Method Reporting Limit (mg/L)	Lowest Applicable Water Quality Standard (mg/L)
pH – field (pH units)	EPA 150.1	NA	6.5-9.0 [a]
Specific Conductance - field	EPA 120.1	NA	NS
Temperature – field (Celsius)	SM 2550 B	NA	15-30°C [a]
Alkalinity (total) – dissolved	SM-2320B	6.0 (as $CaCO_3$)	<25% Change from Natural Conditions [a]
Alkalinity (bicarbonate) – dissolved	SM-2320B	6.0 (as $CaCO_3$)	<25% Change from Natural Conditions [a]
Ammonia (as N) – total & dissolved	SM 4500NH3-D	0.050	0.232-5.91 [f]
Antimony – total	EPA 200.8	0.003	0.146 [b]
Arsenic – total & dissolved	EPA 200.8/EPA 6020	0.0030	0.05 [b, h]
Boron - total & dissolved	EPA 200.7/EPA 6010	0.050	0.75 [c]
Cadmium - total & dissolved	EPA 200.8/EPA 6020	0.0010	0.0005 [d, g, h]
Calcium – dissolved	EPA 200.7/EPA 6010	2.0	NS
Chloride – dissolved	EPA 300.0/9056	2.0	NS
Chromium – total & dissolved	EPA 200.8/EPA 6020	0.0020	0.1 [b]
Fluoride - dissolved	EPA 300.0/9056	0.40	1 [c]
Iron – total & dissolved	EPA 200.7/EPA 6010	0.10	1 [d]
Magnesium - dissolved	EPA 200.7/EPA 6010	2.0	NS
Manganese – total & dissolved	EPA 200.8/EPA 6020	0.0010	0.2 [c]
Molybdenum – total & dissolved	EPA 200.8/EPA 6020	0.0030	1.65 [d]
Nitrate (as N) – total & dissolved	EPA 300.0/9056	0.10	10 [a]
Nitrite (as N) – total & dissolved	EPA 300.0/9056	0.10	1 [a]
Phosphorous (as P) - total	SM 4500-P-E	0.100	0.1 [a]
Potassium - dissolved	EPA 200.7/6010	0.50	NS
Selenium – total & dissolved	EPA 200.8/EPA 6020	0.0020	0.0050 [d]
Sodium - dissolved	EPA 200.7/EPA 6010	0.2	NS
Sulfate – total & dissolved	EPA 300.0	2.0	NS
Thallium – total	EPA 200.8/EPA 6020	0.0010	0.013 [b]
TDS - not filtered	SM 2540C	20	723 [e]
Total Organic Carbon (TOC) - total	SM 5310B	1.0	NS
Total Suspended Solids (TSS) - total	SM 2540D	10	NS

Note: Target Method Reporting Limits assume that laboratory dilution will not be required.
Note: Dissolved parameters will be field filtered
NA denotes no limit available
NS denotes no standard available
[a] Nevada Water Quality Standard Beneficial Uses; from NAC 445A.2168 (Muddy River at the Glendale Bridge)
[b] Nevada Water Quality Standard Municipal or Domestic Supply; from NAC 445A.1236 (Standards for toxic materials applicable to designated waters)
[c] Nevada Water Quality Standard Irrigation; from NAC 445A.1236 (Standards for toxic materials

applicable to designated waters)
[d] Nevada Water Quality Standard Aquatic Life 96-hour average; from NAC 445A.1236 (Standards for toxic materials applicable to designated waters); hardness = 300 mg/L in formulas for cadmium; standard may be exceeded once every three years
[e] Nevada Water Quality Standard for Salinity; from NAC 445A.1233 "Below Hoover Dam"; flow-weighted annual average standard
[f] Range of ammonia values from NAC 445A.118 Table 2 based on pH=7-9 and temperature 14-26 degrees C; 30-day average standard for total ammonia
[g] Laboratory method reporting limit below lowest applicable water quality standard for dissolved cadmium cannot be achieved by standard laboratory methods; values below method reporting limit will be considered in compliance with applicable water quality standards
[h] There are no applicable water quality standards for total arsenic and total cadmium; therefore, the lowest applicable water quality standards listed in this table for the dissolved fraction of these constituents are those presented in NAC 445.1236 for the dissolved fraction

2.4.3 Surface Water Flow Measurement

2.4.3.1 Muddy River

River flow will be measured at all 11 transects on a quarterly basis for one year during dry weather. To be sure that the flow measurements are comparable, all flow measurements will be made during the same day for each quarterly event. Flow measurements will be collected with a handheld SonTek® FlowTracker acoustic Doppler velocimeter, or similar instrument. On the banks of each transect, the area will be prepared by clearing the river of flow obstructions such as eel grass or branches. A graduated tape will be stretched across the river at the transect. The river width will be divided by 20 to establish the stations for flow measurement. Flow measurements will be made at six-inch to 12-inch increments across each transect. At each horizontal location, the depth of water will be measured by the instrument. River velocity at each station will be measured at 60% of the water depth (single point method). Flow measurements will be recorded by the FlowTracker, and also on field forms.

2.4.3.2 Dairy Diversion

Dairy Diversion outflow data will be obtained from the Southern Nevada Water Authority (SNWA). SNWA currently monitors the flow continuously with an ultrasonic Doppler instrument mounted on a Parshall Flume. This data will be obtained from SNWA monthly (or as available) for one year.

2.4.3.3 South Gate Spring

Flow measurements will be made on a quarterly basis for one year with a bucket and stop watch at the South Gate Spring (SGSPR) discharge to the Muddy River. NV Energy will clear the area such that there is room for a bucket to be placed under the discharge to the river. If it is not possible to do this, plastic or other material will be used to funnel the flow into a bucket. The bucket will be used to collect water flowing to the river and the time to fill the bucket recorded. At least five consecutive measurements will be collected in this manner, and the average used for flow calculations.

2.5 Visual Sediment Classification

Visual observations of the river sediment will be made during the first field effort at each transect. The sediments at each transect will be visually described and classified in accordance with the Unified Soil Classification System (USCS) and American Society for Testing and Materials (ASTM) Standard D-2488. Sediment will be collected with a Lexan soil core sampler or similar device. The sampler will be pushed into the river sediments by hand until refusal and then the resulting core will be visually observed. The sediment will be returned to the river bottom following visual classification. River sediments will be visually observed at one location on each transect.

2.6 Visual River Bank Observations

Both sides of the Muddy River banks at each transect will be visually observed for physical changes and seeps on a quarterly basis for one year. Field personnel will also document physical changes in the river channel at each transect since the previous inspection. Changes in the river channel that may impact water quality and flow measurements (e.g., bank erosion or tree fallen into river) will be recorded in the field book and areas photographed. Physical changes will be referenced to the nearest transect either up or downstream of the location.

2.7 Sample Containers, Preservation, and Storage

Veritas Laboratories will provide the appropriate sample containers and preservatives for each sampling event. The sample containers, preservation, and storage will be as specified in Table 3 in Section B2 of the NV Energy QAPP and per Section 3.0 of the Veritas Quality Assurance Quality Control Plan in Appendix C of the approved NV Energy QAPP.

2.8 Field Documentation

All documentation of field activities will be as specified in Section A9.0 of the NV Energy QAPP. Sample handling and shipment will be as specified in Section B3.0 and detailed in Appendix E of the approved NV Energy QAPP. Field data will be recorded in the logbook, on field activity forms, and/or electronically. Photographs of field activities will be taken and included in the MRI Implementation Report. At the end of each day, the Field Team Leader will send an email to the Project Lead summarizing the field activities completed that day.

2.9 Decontamination

Decontamination of drilling and sampling equipment must be conducted consistently to assure the quality of samples collected. All equipment that comes into contact with soil, sediment, groundwater, or surface water will be decontaminated prior to each use in accordance with the EPA Region 9 decontamination procedures referenced in Appendix E of the NV Energy QAPP. Where practical, disposable equipment will be used and will not be decontaminated.

2.10 Investigation-Derived Waste

Investigation-derived waste will be disposed in accordance with applicable regulations. Soil cuttings will be screened with a photoionization detector (PID) and if less than 100 ppm the cuttings will be temporarily containerized and then disposed of in NV Energy's onsite landfill in accordance with the Southern Nevada Health District (SNHD) permit. Well development water can be disposed of on the ground; however, decontamination water will need to be containerized and disposed in the onsite evaporation ponds in accordance with NV Energy's Authorization to

Discharge permit. Decontamination chemicals such as non-phosphate detergent and deionized water will be collected and containerized as described in SOP 2006 Appendix E of the approved NV Energy QAPP.

Section 3

Quality Control

Quality control (QC) measures will be taken in accordance with the approved NV Energy QAPP. The collection of QC samples (e.g., equipment blanks, duplicate samples, etc.) as well as the data validation process is discussed below.

3.1 Quality Control Samples – Water

In accordance with Table 4 in Section B5.2 of the NV Energy QAPP, the QC requirements pertaining to surface water and groundwater samples collected for laboratory analysis are listed in Table 3-1. The frequency of these activities will be based on the combined field activities occurring at any given time during the implementation of the MRI, PA2, PA3, and PA5 through 7 Work Plans.

Table 3-1

QC Sampling and Analysis Summary

AOC Implementation Activity	Organization	Frequency of Activity
Field Blank	Stanley Consultants/OGI	1 per day or 5% of primary field samples per quarterly event (whichever is less) as specified in Section B5.2.2.1 of the QAPP
Equipment Rinsate Blank	Stanley Consultants/OGI	1 per day or 5% of primary field samples per quarterly event (whichever is less) as specified in Section B5.2.2.1 of the QAPP
Blind Field Duplicate Sample	Stanley Consultants/OGI	1 per day, per medium, per analytical method as specified in Section B5.2.2.3 of the QAPP.

Table 3-1

QC Sampling and Analysis Summary (continued)

AOC Implementation Activity	Organization	Frequency of Activity
Trip Blank	Stanley Consultants OGI Veritas Laboratories	Not applicable – no volatile organic analyses
Lab Reagent Blank	Veritas Laboratories	As specified in Appendix C of the QAPP
Method Blank	Veritas Laboratories	As specified in standard method SOP, Appendix C of the QAPP
Matrix Spike/Matrix Spike Duplicate	Veritas Laboratories	As specified in standard method SOP, Appendix C of the QAPP
Lab Control Sample	Veritas Laboratories	As specified in Appendix C of the QAPP
General Bottle Control	Veritas Laboratories	Certified by Manufacturer

During the MRI sampling events, blanks and duplicate samples will be collected in accordance with the NV Energy QAPP and Table 3-1. Sampling locations will be documented in the field logbook and/or on the Field Summary Forms in Appendix D of the NV Energy QAPP. Field blanks will be used to check for analytical artifacts and/or site background contaminants introduced by sampling, transportation, and analytical procedures. These QC samples will be collected by pouring laboratory-provided deionized (DI) water into sample containers provided by Veritas Laboratories in the area of the field investigations.

Equipment or rinsate blanks will be used to check field decontamination procedures and will be collected by pouring laboratory-provided deionized (DI) water through a sampling device after decontamination. If the sampling equipment (i.e., disposal bailer) is certified contaminant-free by the manufacturer, equipment blanks will not be collected during the use of that device.

Field duplicate samples will be used to evaluate the variance of the sampling and laboratory analysis methods. These QC samples will be collected by the same procedures and at the same time as the corresponding primary field sample in accordance with the NV Energy QAPP. The primary and duplicate samples will be assigned different (unique) sample identification (i.e., Sample ID) that do not indicate to the laboratory that they are duplicate samples.

For QC purposes, one replicate Muddy River flow measurement will be made with the FlowTracker per field team per quarterly event using the one-point method. During the first quarterly event, replicate flow measurements will be made at one location using both the one-point method (velocity measured at 60% of river depth) and two-point method (velocities measured at 20% and 80% of river depth). If the difference between the one-point and two-point methods is greater than 25%, the two-point method may be used for the remaining three quarterly flow monitoring events.

In accordance with manufacturer recommendations (refer to Appendix B), the HPT operator will perform a pre-log Quality Assurance (QA) test on the probe tool prior to each boring. A test jig and test load will be used to verify the electrical continuity and isolation of the EC system. A reference tube will be used to verify the accuracy of the pressure sensors. If the results are more than 10% out of range, the probe fails the QA test. The results of the QA test are automatically saved to the information file for each log. Initially, HPTs will be advanced adjacent to former soil boring locations where logs are available to confirm the interpretation of the HPT logs. In addition, HPT profiles will be compared to Sonic soil cores as they become available. The HPT logs will be evaluated, and groundwater samples will be collected for laboratory TDS analyses and field specific conductance measurements from at least one HPT location. If discrepancies are found, the HPT operator will recalibrate, repair, or replace the probe, if necessary.

3.2 Field Equipment Calibration

Field equipment will be calibrated on the schedule summarized in Table 3-2. The frequency meets the minimum requirements specified by the manufacturer, industry SOPs, and EPA guidance.

Table 3-2

Field Equipment Calibration Frequency

Field Instrument	Calibration Checks	
	Pre-Field Bench Check at Mobilization	On-Site
FlowTracker	X	Daily
Temperature/pH Meter	X	Daily
Specific Conductance meter	X	Daily
DO	X	Daily
ORP	X	Daily
HACH Dissolved Iron (II)	X	Daily
HACH Dissolved Manganese	X	Daily
Turbidimeter	X	Daily
Pressure Transducer/Data Logger	X	Monthly manual measurements[1]
Hydraulic Profiling Tool	X	Pre and post-log at each boring location

[1] All transducers will be synced and set so that they collect simultaneous readings and each measurement has the identical time stamp as readings from the other transducers. All of the transducers will be programmed from one field computer prior to deployment, and the time will be synced to that computer. Monthly, the data will be downloaded to this computer and the time will be re-synced.

3.3 Data Usability/Validation

All MRI laboratory data will be submitted to Ordway and Associates for third party data validation and usability determination. Stage 2B and 4 data validation will be conducted in accordance with the Revised Data Validation Memorandum of Understanding dated March 5, 2010, and approved by the NDEP on March 10, 2010. This memo is provided in Appendix H of the QAPP. A cation-anion balance check will also be conducted on all surface water and groundwater samples submitted to the laboratory in accordance with Section D2 of the NV Energy QAPP.

Section 4

Field Variances

During the implementation of the MRI Work Plan, it may be necessary to make minor modifications to the planned activities in the field as conditions change. The Field Team Leader will consult with the Project Lead and the Quality Assurance Officer (QAO) on available options and the potential impact to the investigation objectives. If the selected alternative is deemed to have no significant impact on the investigation objectives, it will be implemented and documented in the MRI Implementation Report. However, if the modification is deemed to have a potentially significant impact on the investigation objectives, work will stop until the NDEP or their representative can be consulted regarding the changes. If concurrence to the modifications to the MRI Work Plan cannot be reached, NV Energy may decide to proceed at risk knowing that NDEP may not agree to use of the data for decision making purposes.

It is anticipated that saturated soils and locations without existing roads may limit NV Energy's ability to install some monitoring wells and HPT borings. NDEP will be notified if any of the 22 planned well locations cannot be accessed in spite of NV Energy's efforts to clear vegetation and provide access suitable for the field vehicles.

All modifications to the NDEP-approved MRI Work Plan will be documented and discussed in the MRI Implementation Report.

Section 5

Data Evaluation and Reporting

This section explains how the data collected during the implementation of the MRI Work Plan will be evaluated to address the objectives presented in Section 1 (objectives are listed in italics). In addition, a data management approach is provided that describes how the data will be compiled, reviewed and reported.

1. *Identify where the Muddy River is gaining and losing (i.e., where groundwater is flowing into the river or water is flowing from the river to groundwater).* The data used to meet this objective will include surface water elevation and flow measurements, HPT data, and groundwater elevations. The Muddy River surface water elevation will be compared to the adjacent groundwater elevations to determine if there is a groundwater gradient toward or away from the river. Groundwater chemistry adjacent to the river will be compared to river water chemistry to further evaluate gaining or losing conditions. Muddy River flow and water chemistry measurements will be used to determine inter-transect reaches where the river is gaining or losing flow and TDS, and evaluate the magnitude of gains or losses. HPT hydrostratigraphic data will be used to assess if the near-river stratigraphy supports the magnitudes of flow in the gaining and losing reaches.

2. *Evaluate variability in gaining and losing conditions in the Muddy River due to seasonal changes and other natural events*. Seasonal changes in gaining and losing conditions will be evaluated by comparing one year of quarterly Muddy River and groundwater data by the methods described above for Objective 1. Quarterly data will also be compared to historical groundwater data to assess the representativeness of measured trends. Flood events may be difficult to capture due to the infrequency and generally temporary nature of these events. Supplemental data that may be incorporated in this evaluation may include US Geological Survey Muddy River flow data from the Moapa and Glendale Stations and meteorological data from the US Weather Service. Continuous Muddy River and groundwater elevation and water parameter data will be used to evaluate the groundwater response from smaller storm-drought cycles to predict the system response to lower frequency events.

3. *Evaluate variations in water quality in the Muddy River associated with seasonal changes and other natural events*. Seasonal changes in Muddy River water quality will be evaluated by comparing one year of quarterly Muddy River and groundwater data by methods described above for Objective 1. Quarterly data will also be compared to historical groundwater data to assess the representativeness of measured trends. Continuous Muddy River water parameter data will be used to evaluate water quality response from smaller storm-drought cycles to predict the system response to lower-frequency events. Historical water data from SNWA will be used along with the current water quality data being collected during the MRI Work Plan to identify variations.

4. *Collect data for estimating the mass flux of Total Dissolved Solids (TDS) from the Site to the Muddy River*. TDS mass flux to the river will be initially estimated at each transect using flow and quarterly TDS data. TDS mass flux at each transect will be compared to upstream conditions. More robust calculations of the mass flux of TDS from the Site to the river will be made according to the Interstate Technology and Regulatory Council (ITRC) guidance document on the method for measurement of mass flux and mass discharge (ITRC 2010). Because this guidance document does not specifically address groundwater mass flux to surface water, the method may be modified for use at this Site.

5. *Address geochemical data gaps related to potential groundwater/surface water interaction.* Data collected during the MRI will be compared to data collected during the pond area investigations and used in the refinement of the preliminary geochemical conceptual site model (CSM).

5.1 Data Management

Each day, the Stanley Consultants Project Lead will review and compile the following information:

- Field progress
- Field notes and observations
- Field measurements
- Chain-of-custody forms
- HPT logs
- Sonic boring logs (field notes)
- Photographs

Each week, the Stanley Consultants Project Lead will provide NDEP, NV Energy, and the California Department of Water Resources (CDWR) with a report that includes the daily information for the past week as well as the following information, when available:

- Schedule of field activities (previous week, current week, next two weeks)
- Tables of field measurements
- Tables of non-validated laboratory results – estimated to be available six weeks following data collection
- Excel spreadsheets with transducer/water quality probe data (following monthly download)
- Table summarizing ratio of groundwater conductivity to TDS

- Boring logs/well construction diagrams
- Preliminary flow/TDS balances (available quarterly)
- Figures showing profiles of field parameter measurements in river (available quarterly)

If NDEP has comments regarding the format or content of the information presented in the weekly report, NV Energy requests that those comments be provided in a timely manner so necessary adjustments can be made to the data management and field activities.

In December 2015, a workshop will be conducted with NDEP to discuss data collected during implementation of this MRI Work Plan as well as the PA2, PA3, and PA5 through 7 Work Plans. This workshop will present data collected in 2015 and how it supports the Conceptual Site Model (CSM) for the Reid Gardner Station. Refinements to the preliminary geochemical CSM will also be discussed at this workshop. In 2016, a MRI Work Plan Implementation Report will be prepared presenting the results of the MRI Work Plan implementation.

Section 6

Schedule

NV Energy plans to begin the MRI field activities in February 2015 with the last monthly data collection scheduled in March 2016. In accordance with the AOC, NDEP will be notified at least 14 days prior to conducting sampling activities outlined in this Work Plan. The tentative schedule of field activities proposed in this Work Plan is presented in Table 6-1 below. Where possible, NV Energy will coordinate the MRI field activities to take place simultaneously with the semi-annual groundwater monitoring events in February and August, as well as the May and November quarterly groundwater level monitoring events.

Table 6-1

Proposed Field Activities Schedule

Activity	Field Schedule	Locations
Surveying	One event, February 2015	11 river transects, South Gate Spring, culvert under haul road (MR-25), Dairy Diversion flume invert elevations, Dairy Diversion Dam (top of structure elevation); horizontal locations and TOC elevations for all new wells to be surveyed after installation
Monitoring Well Installation	One event, March – April 2015	21 new well locations (using one existing well) on north and south sides of each of the 11 river transects
Continuous Groundwater Elevation Measurement	Transducers installed April 2015 and data downloaded monthly through March 2016	Transects T-1, 2, 3, 5, 6, 8, 9, and 11 (MW-24S, MW-23S, MW-22S, MW-21S, MW-20S, MW-19S, P-31S, P-15AR, P-29S, P-30S, KMW-22S, KMW-23S, KMW-24S, KMW-25S, KMW-28S, and KMW-29S)

Activity	Field Schedule	Locations
Manual Groundwater Elevation Measurement	Monthly, April 2015 – March 2016	All 22 MRI transect wells
Continuous Groundwater Parameter Measurement	Monitoring equipment installed April 2015, temperature and conductivity data downloaded monthly through March 2016	Sixteen wells at eight transects; T-1, 2, 3, 5, 6, 8, 9 and 11 (MW-24S, MW-23S, MW-22S, MW-21S, MW-20S, MW-19S, P-31S, P-15AR, P-29S, P-30S, KMW-22S, KMW-23S, KMW-24S, KMW-25S, KMW-28S, and KMW-29S)
Manual Groundwater Parameter Measurement	Measure pH, temperature, and conductivity monthly, April 2015 – March 2016	All 22 wells at all 11 transects
MicroWells	Qualitative indication of gaining/losing measured during one event, March 2015	Six locations; T-1, 3, 5, 6, 8, and 11, three attempts at each location; may be repeated in later field events depending on results during this event
Continuous Surface Water Elevation Measurement	Transducers installed February 2015 and data downloaded monthly through March 2016	One transducer installed in river at transects T-1, 2, 3, 5, 6, 8, 9, and 11
Manual Surface Water Elevation Measurement	Monthly, February 2015 – March 2016	At all 11 transects
Continuous Surface Water Parameter Measurement	Monitoring equipment installed March 2015; temperature and conductivity data downloaded monthly through March 2016	At transects T-1, 2, 3, 5, 6, 8, 9, and 11
Manual Surface Water Parameter Measurements – Field Parameters	Measure pH, temperature, and conductivity monthly, March 2015 – March 2016	At all 11 transects, Dairy Diversion Flow, South Gate Spring outfall
Manual Surface Water Parameter Measurements – Field Parameters	Measure pH, temperature, and conductivity quarterly to profile water quality in the transect	At all 11 transects
Manual Surface Water Sampling – Laboratory Parameters	Quarterly (March, June, September, December 2015)	At transects T-1, 4, 6, 8, 10, and 11; Dairy Diversion Outflow; South Gate Spring outfall
Surface Water Flow Measurement	Quarterly (March, June, September, December 2015)	11 transect locations, SGSPR, and dairy diversion (obtained from SNWA)

Activity	Field Schedule	Locations
Visual Sediment Classification	One event, March 2015	11 transect locations
Visual River Bank Observations	Quarterly (March, June, September, December 2015)	Observe for seeps at all 11 transect locations

Section 7

References

The Interstate Technology and Regulatory Council, 2010, *Use and Measurement of Mass Flux and Mass Discharge*, August 2010.

NDEP and NV Energy, 2008. *Nevada Division of Environmental Protection, Administrative Order on Consent (AOC)*, February 22, 2008.

Stanley Consultants, 2011. *Generic Quality Assurance Project Plan*, Nevada Power Company, Reid Gardner Station, Moapa, Nevada, Final, November 2011.

Stanley Consultants, 2013. *Evaluation of Background Conditions*, NV Energy, Reid Gardner Station, Moapa, Nevada, Draft, October 2013.

Section 8

Acronyms and Abbreviations

AOC	Administrative Order on Consent
ASTM	American Society for Testing and Materials
bgs	below ground surface
CEM	Certified Environmental Manager
CSM	Conceptual Site Model
DI	Deionized
DMR	Discharge Monitoring Report
DO	Dissolved Oxygen
EC	Electrical Conductivity
GIS	Geographic Information System
HASP	Health and Safety Plan
HPT	Hydraulic Profiling Tool
MRI	Muddy River Investigation
MW	Monitoring Well
NDEP	Nevada Division of Environmental Protection
ORP	Oxidation Reduction Potential
pH	Measure of acidity or alkalinity
QA	Quality Assurance
QAO	Quality Assurance Officer
QAPP	Quality Assurance Project Plan
QC	Quality Control
SGSPR	South Gate Spring
Site	Reid Gardner Station Property (entire property)
SNHD	Southern Nevada Health District
SNWA	Southern Nevada Water Authority
SOP	Standard Operating Procedure
TDS	Total Dissolved Solids
TOC	Top of Casing
TSS	Total Suspended Solids
USA	Underground Service Alert
USCS	Unified Soil Classification System

Appendix A

Proposed Muddy River Investigation Work Plan Sampling Locations Figure

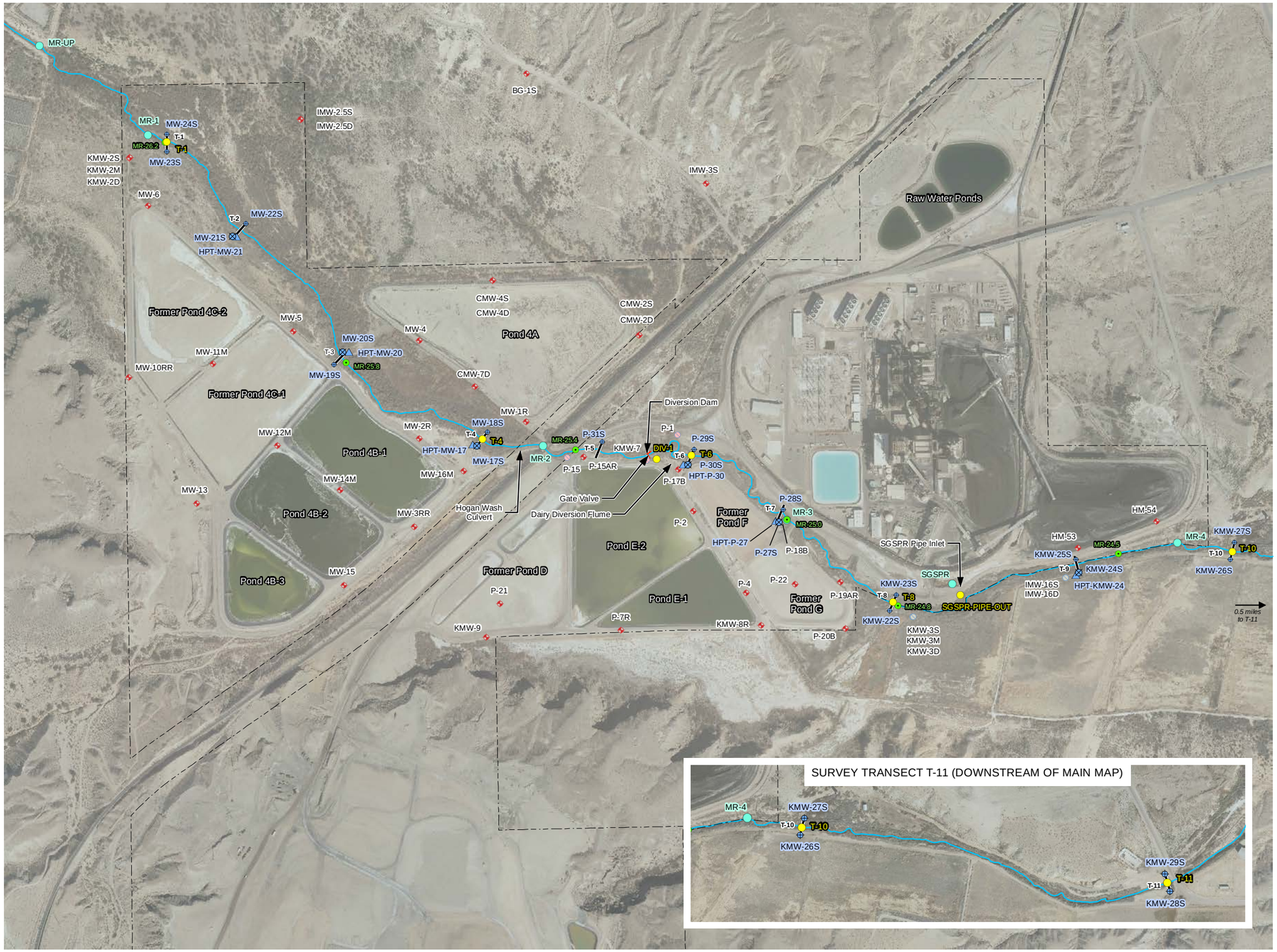

Legend

- Monitoring Well - Currently Gauged or Sampled
- Monitoring Well - Abandoned
- Monitoring Well - Destroyed
- MRI Surface Water Sampling Location (2014-Q3)
- MRI Surface Water Sampling Location (Current)
- DMR Surface Water Sampling Location
- Proposed HPT with 2" Well
- Proposed Sonic with 4" Well
- Proposed HPT
- Proposed Survey Transect
- Property Boundary

N

750 375 0 750 1,500 Feet

Notes:
1. Aerial imagery provided by Clark County Assessor Office; photographs taken Spring 2013
2. Survey transect T-11 is located approximately 0.5 miles downstream from T-10; shown on map inset

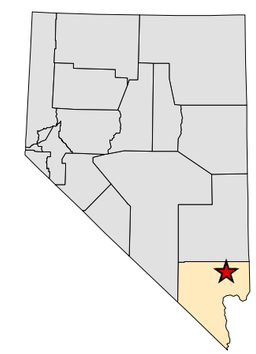

Stanley Consultants INC.

April 2015

PROPOSED MUDDY RIVER INVESTIGATION
WORK PLAN SAMPLING LOCATIONS
Muddy River Investigation Work Plan
NV Energy
Reid Gardner Station
Moapa, NV
Figure 1

REV	No.	REVISION DESCRIPTION	DATE	DRWN	CHKD	APVD
1		Submittal to NDEP	4/01/15	CC	JO/AE	RLS
0		Submittal to NDEP	1/06/15	CC	JO/AE	RLS

0 1 in.
At full size
1 inch = 750 feet

NVEnergy

20618.09.36

REV. 1

\\cys1\Projects_F\20618_03_NVE_RGS_AOC_Imp09\Active\14-GIS\GIS\Working\Data\Mxd\MuddyRiver\MRIWorkPlan\FIg1_MRIWorkPlan.mxd © STANLEY CONSULTANTS

Appendix B

Manufacturer's Information

In-Situ Inc.

Innovations in
Water Monitoring

Aqua **TROLL**® CTD Data Loggers

Conductivity, Temperature, Plus Water Level Logging

Conductivity measurements can be used to characterize water quality changes relative to a baseline or to estimate the concentration of contaminants. The In-Situ® Aqua TROLL 100 and Aqua TROLL 200 Instruments measure and log conductivity and temperature. The Aqua TROLL 200 adds water level logging.

Rugged, Compact Design

- Use in harsh environments. Titanium construction resists fouling and is chemical- and corrosion-resistant.
- Deploy 1.83-cm (0.72-in) diameter instruments into narrow wells.

Extended Deployments

- Reduce power consumption. Batteries have a typical life of 5 years when reading every 15 minutes. 8-36 VDC input is compatible with external batteries and solar power.
- Use the TROLL® Shield Antifouling System to reduce biofouling and extend deployments by up to 6 weeks.

Accurate Results

- Use dynamic density compensation to collect accurate water level data in environments where salinity values may vary.
- Receive factory-calibrated instruments that are validated with NIST®-traceable standards.
- Deploy for long-term monitoring. Instruments operate with very low drift.

Flexible Communications

- Integrate into telemetry and SCADA systems. Outputs include standard Modbus/RS485, SDI-12, and 4-20 mA.
- Easily connect to RuggedReader® Handheld PC or PC.
- Use RuggedCable® Systems with titanium twist-lock connectors for quick, reliable connections.
- Simplify instrument setup, automate site management, and view real-time results with Win-Situ® Software.

Applications

- Aquifer storage and recovery systems
- Coastal deployments—Saltwater intrusion monitoring, storm surge analysis, and estuary/wetland research
- Remediation site and mine water monitoring
- Stormwater monitoring programs

Aqua **TROLL**® 100 and 200 Data Loggers

	Aqua TROLL 100 and 200 Instruments	
Temperature ranges[1]	Operational: -5 to 50° C (23 to 122° F) Storage: -40 to 65° C (-40 to 149° F) Calibrated: 0 to 50° C (32 to 122° F)	
Max. pressure for Aqua TROLL 100	500 psi (1153 ft)	
Dimensions & weight	Diameter (OD): 1.83 cm (0.72 in). Length: 31.5 cm (12.4 in) Weight: 0.5 kg (1.0 lb)	
Materials	Titanium body and sensors, Delrin® nose cone, and PVC conductivity cell	
Output options	Modbus/RS485, SDI-12, and 4-20 mA	
Battery type & life[2]	3.6V lithium. 5 years or 200,000 readings[3]	
External power	8-36 VDC	
Memory **Data records**[4] **Data logs**	4.0 MB 190,000 50	
Log types[5]	Linear, Linear Average, and Event	
Fastest logging rate	Linear: 1 per minute. Linear Average: 1 per minute. Event: 1 per second	
Fastest output rate	1 per second	
Conductivity Sensor	Type: Balanced 4-electrode cell	
Methods	EPA Method 120.1; Standard Methods 2510	
Range, accuracy, & resolution	Range: 5 to 100,000 µS/cm Accuracy: ±0.5% of reading + 1 µS/cm when reading less than 80,000 µS/cm ±1.0% of reading when reading above 80,000 µS/cm Resolution: 0.1 µS/cm	
Parameters supported[6]	*Range*	*Units*
Actual conductivity	5 to 100,000 µS/cm	µS/cm, mS/cm
Specific conductivity[7]	5 to 100,000 µS/cm	µS/cm, mS/cm
Salinity[8]	0 to 42 PSU	PSU
Total dissolved solids	0 to 82 ppt	ppt, ppm
Resistivity	10 to 200,000 Ohms-cm	Ohms-cm
Density (water salinity)	0.98 to 1.14 g/cm^3	g/cm^3
Pressure/Level Sensor[9]	Type: Piezoresistive. Pressure/level are available only on the Aqua TROLL 200 Instrument.	
Range	*Absolute (non-vented)*	*Gauged (vented)*
	30 psia: 11 m (35 ft)	5 psig: 3.5 m (11.5 ft)
	100 psia: 60 m (197 ft)	15 psig: 11 m (35 ft)
	300 psia: 200 m (658 ft)	30 psig: 21 m (69 ft)
	500 psia: 341 m (1120 ft)	100 psig: 70 m (231 ft)
		300 psig: 210 m (692 ft)
		500 psig: 351 m (1153 ft)
Burst pressure	Maximum 2x range; burst > 3x range	
Accuracy & resolution[10]	Accuracy @ 15° C: ±0.05% full scale (FS)[11] Accuracy 0 to 50° C: ±0.1% FS[12] Resolution: 0.005% FS or better	
Units of measure	Pressure: psi, kPa, bar, mbar, mmHg, inHg, cmH_2O, inH_2O. Level: in, ft, mm, cm, m	
Temperature Sensor		
Method	EPA Method 170.1	
Accuracy & resolution	Accuracy: ±0.1° C. Resolution: 0.01° C or better	
Units of measure	Celsius or Fahrenheit	
Warranty	2 years. Up to 5-year extended warranties available—please call for details.	

TROLL® Shield System Extends Deployments

When used at coastal and high-fouling sites, the TROLL Shield Antifouling System fights biofouling of the Aqua TROLL Instrument and its conductivity cell. Reduced sensor fouling extends deployments by up to 6 weeks and improves instrument accuracy and performance. Use the coiled copper guard with both the Aqua TROLL 100 and 200 Instruments. Use the copper nose cone with the Aqua TROLL 200. For optimum performance, replace the guard every 6 months.

24/7 Support

In-Situ technical specialists assist with instrument setup, application support, and troubleshooting. Call for free technical support.

[1] Temperature range for non-freezing liquids
[2] Typical battery life when used within the factory-calibrated temperature range
[3] 1 reading = date/time plus all available parameters polled or logged from device
[4] 1 data record = date/time plus 3 parameters logged (no wrapping) from device
[5] External power or battery pack is recommended when using Linear Average or Event logging modes.
[6] Parameters derived from temperature at 25° C and actual conductivity range of 5 to 100,000 µS/cm with a ±0.5% + 1 µS/cm accuracy
[7] Derived from Standard Methods 2510B
[8] Defined by the Practical Salinity Scale 1978; Standard Methods 2520B
[9] Real-time level compensation based on water density
[10] Accuracy with 4-20 mA output option: ±0.25% FS
[11] Across factory-calibrated pressure range
[12] Across factory-calibrated pressure and temperature ranges
Specifications are subject to change without notice.
Delrin is a registered trademark of E.I. du Pont de Nemours and Company.
NIST is a registered trademark of the National Institute of Standards and Technology.

In-Situ Inc.

Call to purchase or rent—www.in-situ.com
221 East Lincoln Avenue, Fort Collins, Colorado, U.S.A. 80524
1-800-446-7488 (toll-free in U.S.A. and Canada)
1-970-498-1500 (U.S.A. and international)
Copyright © 2014 In-Situ Inc. All rights reserved. June 2014 (1K)

YSI Environmental

YSI 556 Multiparameter System

Versatile, multiparameter handheld instrument

The 556 has multiple language capabilities and graphing!

Rugged and reliable, the YSI 556 MPS (Multiprobe System) combines the versatility of an easy-to-use, easy-to-read handheld unit with all the functionality of a multiparameter system.

- **Simultaneously measures dissolved oxygen, pH, conductivity, temperature, and ORP**
- **Field-replaceable electrodes**
- **Compatible with EcoWatch® for Windows® data analysis software**
- **Stores over 49,000 data sets, time and date stamped, interval or manual logging**
- **Three-year warranty on the instrument; one-year on the probes**
- **GLP assisting, records calibration data in memory**
- **Available with 4, 10, and 20-m cable lengths**
- **IP-67, impact-resistant, waterproof case**
- **Easy-to-use, screw-on cap DO membranes**
- **RS-232 interface for PC connection**

Options to Fit Your Applications!

- **Battery Options – The unit is powered by alkaline batteries or an optional rechargeable battery pack with quick-charge feature.**
- **Optional Barometer – Internal barometer can be user-calibrated and displayed along with other data, used in dissolved oxygen calibrations, and logged to memory for tracking changes in barometric pressure. (Choose 556-02)**
- **Optional Flow Cell - The 5083 flow cell can be used for ground water applications or anytime water is pumped for sampling.**
- **Carrying Case – The instrument comes standard with YSI 5061, a soft-sided carrying case with enough space for the 556, a 20-meter cable, and calibrating supplies. An optional 5080 hard-sided carrying case is also available.**
- **Confidence Solution® - Quality assurance ensured. Quickly check conductivity, pH, and ORP readings with one solution.**

Pure Data for a Healthy Planet.®

A rugged, cost-effective multiparameter handheld system designed for the field!

+1 937 767 7241
800 897 4151 (US)
www.ysi.com

YSI Environmental
+1 937 767 7241
Fax +1 937 767 9353
environmental@ysi.com

YSI Integrated Systems
+1 508 748 0366
systems@ysi.com

SonTek/YSI
+1 858 546 8327
inquiry@sontek.com

YSI Gulf Coast
+1 225 753 2650
environmental@ysi.com

AMJ Environmental
+1 727 565 2201
amj@ysi.com

YSI Hydrodata (UK)
+44 1462 673 581
europe@ysi.com

YSI Middle East (Bahrain)
+973 1753 6222
halsalem@ysi.com

YSI (Hong Kong) Limited
+852 2891 8154
hongkong@ysi.com

YSI (China) Limited
+86 532 575 3636
beijing@ysi-china.com.

YSI Nanotech (Japan)
+81 44 222 0009
nanotech@ysi.com

YSI India
+91 989 122 0639
sham@ysi.com

YSI Australia
+61 7 390 17223
acorbett@ysi.com

ISO 9001
ISO 14001

EcoWatch, Pure Data for a Healthy Planet, Confidence Solution and Who's Minding the Planet? are registered trademarks of YSI Incorporated. Windows is a registered trademark of Microsoft.

©2009 YSI Incorporated
Printed in USA 0709 W11-06

CE

YSI incorporated
Who's Minding the Planet?™

5563 MPS Sensor Specifications

Dissolved Oxygen (% saturation)	Sensor Type	Steady state polarographic
	Range	0 to 500% air saturation
	Accuracy	0 to 200% air saturation, ± 2% of the reading or ±2% air saturation, whichever is greater; 200 to 500% air saturation, ± 6% of the reading
	Resolution	0.1% air saturation
Dissolved Oxygen (mg/L)	Sensor Type	Steady state polarographic
	Range	0 to 50 mg/L
	Accuracy	0 to 20 mg/L, ± 2% of the reading or ±0.2 mg/L, whichever is greater; 20 to 50 mg/L, ± 6% of the reading
	Resolution	0.01 mg/L
Temperature	Sensor Type	YSI Temperature Precision™ thermistor
	Range	-5 to 45°C
	Accuracy	± 0.15°C
	Resolution	0.1°C
Conductivity	Sensor Type	4-electrode cell with autoranging
	Range	0 to 200 mS/cm
	Accuracy	± 0.5% of reading or ± 0.001 mS/cm; whichever is greater (4-meter cable) ± 1.0% of reading or ± 0.001 mS/cm; whichever is greater (20-meter cable)
	Resolution	0.001 mS/cm to 0.1 mS/cm (range-dependent)
Salinity	Sensor Type	Calculated from conductivity and temperature
	Range	0 to 70 ppt
	Accuracy	± 1.0% of reading or ±0.1 ppt, whichever is greater
	Resolution	0.01 ppt
pH (optional)	Sensor Type	Glass combination electrode
	Range	0 to 14 units
	Accuracy	±0.2 units
	Resolution	0.01 units
ORP (optional)	Sensor Type	Platinum button
	Range	-999 to +999 mV
	Accuracy	± 20 mV
	Resolution	0.1 mV
Total Dissolved Solids (TDS)	Sensor Type	Calculated from conductivity (variable constant, default 0.65)
	Range	0 to 100 g/L
	Resolution	4 digits
Barometer (optional)	Range	500 to 800 mm Hg
	Accuracy	± 3 mm Hg within ± 10°C temperature range from calibration point
	Resolution	0.1 mm Hg

YSI 556 Instrument Specifications

Size	11.9 cm width x 22.9 cm lenth (4.7 in. x 9 in.)
Weight with batteries	2.1 lbs. (916 grams)
Power	4 alkaline C-cells; optional rechargeable pack
Cables	4-, 10-, and 20-m (13.1, 32.8, 65.6 ft.) lengths
Warranty	3-year instrument; 1-year probes and cables
Communication Port	RS-232 Serial
Data Logger	49,000 data sets, date and time stamp, manual or logging, with user-selectable intervals

556 Ordering Information (Order all items separately)

556-01	Instrument (with 5061 large, soft-sided carrying case)
556-02	Instrument with barometer option (with 5061 carrying case)
5563-4	4-m cable and DO/temp/conductivity
5563-10	10-m cable and DO/temp/conductivity
5563-20	20-m cable and DO/temp/conductivity
5564	pH Probe for any 5563 cable
5565	pH/ORP Probe for any 5563 cable
6118	Rechargeable battery pack kit (includes battery, adapter, charger)
614	Ultra clamp, C-clamp mount
616	Charger, cigarette lighter
4654	Tripod (small tripod for instrument)
5060	Small carrying case, soft-sided (fits instrument and 4-m cable)
5065	Form-fitted carrrier with shoulder strap
5080	Small carrying case, hard-sided (fits instrument, 4-m cable, flow cell, batteries, membrane kit, calibration bottles)
5083	Flow cell
5085	Hands-free harness
5580	Confidence Solution® (insure probe accuracy with a simple field-check for conductivity, pH, and ORP)

The 5080 carrying case with 556, 5563-4 cable, and 5083 flow cell.

Microwells Manual

MHE Products PushPoint Sampler (US Pat. # 6,470,967)
Operators Manual and Applications Guide

Ver. 2.01 2/15/03

Models: PP27, PP14, PPX36, PPX72

Introduction

The groundwater/surface water interface (GSI) has been a research interest of mine for the past decade. This transitional zone is usually rich in biomass and may play a predominant role in the bioattenuation of contaminated groundwater entering surface water bodies. Usually these biologic processes have limited effectiveness in attenuating highly contaminated groundwater, leaving a plume of parent contamination and metabolic byproducts that eventually expresses itself in receiving waters - usually classified as non-point sources of pollution because of the uncertainty of the discharge area. Reliance on conventional technology and techniques to perform a detailed investigation required extensive effort and burdensome equipment.

Sampling at each location usually takes 5 minutes, allowing a small crew to collect dozens of samples in an afternoon. These samples can be analyzed in the field for real-time information useful in directing field investigations and research. The work that I have conducted at several contamination sites indicates that many groundwater plumes discharge in surface water bodies in 2-3' of water depth - accessible to investigators wearing hip boots or waders. Many plumes, especially Light Non-Aqueous Phase Liquid (LNAPL) plumes can be delineated by collection of samples in very shallow water or from under beaches. My initial experience has shown that Dense Non-Aqueous Phase Liquid (DNAPL) contaminant plumes express themselves in the shallow, near-shore water as well, even though the on-shore depth of the contaminant mass was deep in the aquifer.

Directions

Look at Figure 1.

As you can see, the PushPoint device is a very simple, precisely machined tool consisting of a tubular body fashioned with a screened zone at one end and a sampling port at the other. The bore of the PushPoint body is fitted with a guard-rod that gives structural support to the PushPoint and prevents plugging and deformation of the screened zone during insertion into sediments. The PushPoint is made of 316 stainless steel assuring compatibility with most sampling environments. The screened-zone consists of a series of interlaced machined slots which form a short screened-zone with approximately 20% open area.

Operation of the device is not difficult. One simply holds the device in a manner that squeezes the two handles towards each other to maintain the guard-rod fully inserted in the PushPoint body during the insertion process (as shown in Figure 2). Holding the device in this manner, push the PushPoint into the sediments or beach to the desired depth using a gentle twisting motion. When the desired depth is reached (or you hit refusal, usually at an aquitard) remove the guard-rod from the PushPoint body without disturbing the position of the deployed sampler. Once the guard-rod has been removed from the PushPoint, it SHOULD NOT be reinserted into the device until the bore of the PushPoint has been thoroughly cleansed of all sand, silt, etc.

Attach a syringe or peristaltic pump to the PushPoint sample-port (see Figure 3) and withdraw water at a low-flow sampling rate (50-200 ml/min.). The first 20-50 ml of groundwater will be turbid. This is the "development" water and should be discarded. Once non-turbid aliquots have been withdrawn, representative samples can be collected for on-site and off-site analysis.

Cleaning and Maintenance

I cannot stress how important cleanliness and linearity are to the working life of the instrument. The PushPoint was designed as an indefinitely reusable device; potentially able to be reused hundreds of times. The tolerance between the guard-rod and the bore of the PushPoint is very small. Increases in this tolerance through abrasion and damage may allow silty material into this annular space, eventually jamming the guard-rod into the bore - maybe permanently!

Excess wear and abrasion can also be introduced if the guard-rod is inserted frequently when the PushPoint body is bent. All the small bends should be "undone" prior to reinsertion of guard-rod to avoid scraping the sides of the bore causing burrs. Before reinsertion of the guard-rod into the cleaned PushPoint, the device should be "straight as an arrow". Use caution when straightening the screened-zone, it is somewhat delicate without the guard-rod inside it, and can be broken through repeated bending. Similarly, the guard-rod should be bend-free and clean when inserted into the bore of the device. When a clean and straight PushPoint is assembled, the guard-rod should slide fairly easily through the PushPoint bore and its handle should seat against the sampling port.

Clean the exterior of the guard-rod and PushPoint body and screened-zone with a stiff brush and cleaning solution (soapy water).Cleaning and decontamination of the bore of the instrument is easily accomplished using the cleaning adapter provided. Remove the spray nozzle of a "garden sprayer" filled with cleaning solution. Connect the adapter as shown in Figure 4. Insert the sampling port of the PushPoint to the adapter and squirt ~ 100 ml of pressurized cleaning solution backwards through the sampler and out the screened-zone into a waste receptacle. Gently push the guard rod into the bore of the PushPoint to its end to dislodge any bridged material. Re-rinse the bore with cleaning solution. Follow this with a distilled water and/or methanol rinse. Reinsert the guard-rod and the device is ready to be used again.

In some instances it may be advantageous to force the cleaning solution through the screened-zone and out the sampling port. To do so, gently insert the screened-zone of the PushPoint into the cleaning adapter, making sure not to bend the screened-zone, until the entire screened-zone is within the adapter. The screened-zone is somewhat fragile. To avoid damage, do not bend the screen-zone during insertion into the adapter. Squirt cleaning solution through the sampler to a waste receptacle.

Helpful Hints, Information, and Cautions

- Multiple depths can be sampled in one hole if samples are collected, in order, from deepest to shallowest. Insert the sampler using a twisting motion until you reach refusal. Remove the guard-rod. **Do not push the sampler further into the sediments once the guard-rod has been removed as this may damage the screened-zone and plug the device with sediment**. Once sampling has been completed at this deepest depth, the PushPoint can be partially pulled from the hole to a new sampling elevation. Remember, to prevent screened-zone damage, do not to insert the PushPoint into the sediments without the guard-rod inserted into the PushPoint body. Alternately, multiple holes can be used to collect samples from multiple depths at a particular sampling location. If vertical sampling is performed in one hole, it is recommended that some type be device such as a sampling platform be used to prevent lateral movement and slippage of the PushPoint as sampling is conducted near the top of the hole (see Figure 3). This offsets the leverage of the instrument and reduces hole degeneration. A simple platform would be a plate of steel with a 3/16" dia. hole through its center and would serve the fundamental purpose of maintaining a rigid hole opening . MHE offers a 8" dia., heavy-duty steel sampling platform engineered for the precise sampling depth requirements of field research. If repeated shallow sampling is to be conducted, it may be more convenient to use a shorter sampler (i.e. MHE - PP14").

- If you wish to reuse the PushPoint sampler at a particular sampling location and want to clean the bore quickly while you're there so that the guard-rod may be safely reinserted, you can use a syringe filled with surface water or DI water to backflush the bore several times before reinserting the guard-rod. Use at least 100 ml of water. If you have too much trouble reinserting the guard-rod (i.e. grit), it will be necessary to use the standard cleaning procedures.
- If the screened-zone of the PushPoint becomes plugged while inserted in the sediments due to passage through "something", it is frequently possible to hydraulically/pneumatically shock the screened-zone free of adhering material while it is inserted into the sediments. Attach a large-volume (50 ml) syringe to the sampling port. In a quick motion, pull the syringe plunger most of the way back (creating a vacuum) and then immediately release the plunger - the plunger will slam to a neutral position, sending a shock wave through the bore of the PushPoint and may alleviate the problem.
- The PushPoint can be used as a piezometer to determine the static head of the groundwater and hence, the potential direction of groundwater movement. To do this, a tube is connected to the sample port as shown in Figure 5. A continuous stream of water is established from the syringe (or pump) to the screened-zone by pumping out any air remaining in the PushPoint /tubing. When the tube is disconnected from syringe, the static water level in the tube will represent the static water level at the depth that the screened-zone occupies. In some discharge areas I have found several feet of head differential, and when the tubing is removed, the PushPoint flows like a miniature artesian well.
- It is frequently possible to push the PushPoint through thin lenses of low-permeably material and collect samples from below them and gather valuable geochemical samples. At many of the sites where the PushPoint has been used, sampling from just below a layer of fine sand/silt/clay, one occasionally encounters seemingly large pockets of gas that seem to have coalesced and collected under this less permeable stratum. Analysis of these pockets may provide additional insight to predominant biological processes. It is likely true that the concentration of volatile chemicals in the groundwater has equilibrated with these bubbles which means that their presence in a sampling stream or syringe would not significantly affect the concentration of dissolved volatile organic chemicals (VOC's). In fact, if one assumes that equilibrium conditions exist, the concentration of VOC's in the bubbles is directly related the concentration in the surrounding groundwater. An different condition may exist if the groundwater is supersaturated with bacterial metabolic waste gasses and the negative pressure exerted by the pump (or syringe) initiates degassing of dissolved gasses from the groundwater. In this instance, VOC's would partition from the groundwater to the bubbles as they are formed in the sampling tubing (this is fairly evident if occurring). The consequence of this condition is that part of the dissolved contaminant mass has partitioned into the gas phase and unless the gas-phase is captured, quantified and accounted for, the native VOC concentration of the groundwater is not reflected by analysis of the groundwater alone. If this condition exists, the degassing effect can be minimized by decreasing the sampling rate to a rate more easily yielded by the sampled formation. With experience, it is easy to distinguish which of these conditions (or combination of conditions) exist and to what extent they affect sample quality.
- The internal volume of a PushPoint PP27 is approx. 1.5 ml. A 50 ml syringe full of distilled water, decon water, methanol, etc. will push about 33 volumes through the bore.
- When straightening the screened zone it is sometimes helpful to flush out the bore of the device with a cleaning solution and then insert the guard-rod to the area of the bend in the screened-zone. Gently unbend the portion of the screened-zone nearest the rod and carefully advance the rod to the next bend. After the rod has been fully inserted into the screened-zone perform the final screened-zone, straightening until the guard-rod slides freely through it.
- If the sampling port of the PushPoint is above the static level of the water body, each time you remove the syringe or pump from the PushPoint sampling port, air will fill the bore of the PushPoint, allowing the water level in the bore to reach its static head. To avoid this plug of air from entering the subsequent syringe, attach a pinch clamp and/or a 3-way valve between the sampling port and the syringe or pump inlet as shown in Figure 7.
- I have conducted dye tests (concentrated uranine dye) by injecting concentrated dye under a perforated 1.5' diameter disk through which the PushPoint was inserted from depths of 3" - 12" into sediments. The goal of these tests was to determine whether or not surface water and dye are drawn into samples collected in near surface sediments (i.e. whether a cone of depression is formed). The results indicated

that no surface water is drawn into samples even though sampling was conducted with a peristaltic pump at its maximum rate of 600 ml/min for several minutes.

- I usually couple my field investigations with global positioning system (GPS) identification of the sampling location. If conditions permit, a pin flag can be placed at the sampling location for later location by GPS - I usually use sub-meter grade GPS for this surveying. GPS can then used in the future to relocate previously sampled location even if certain site physical characteristics have changed (eroding shorelines, etc.). If long-term study of a shoreline is planned it will be useful to have an elevation benchmark established on shore that can be used as a reference. The elevation of the sampling locations can then accurately measured. This may be helpful in areas where sediment levels are not stable such as in erosional areas.
- Sampling by syringe has many advantages. This is my preferred field method due to its simplicity and versatility. It is useful to be able to collect several 50 ml syringes full of groundwater, store them on ice and perform the sample transfer to VOA vial, etc. under more controlled conditions. To transfer sample to a VOA vial, place the end of the transfer tube (Figure 8) to the bottom of the VOA vial. Dispense sample into the VOA vial and slowly withdraw the transfer tube from the vial maintaining the mouth of the transfer tube just below the sample surface. When the transfer tube is almost out of the vial, continue to dispense sample and leave an "anti-meniscus" of sample above the rim of the vial. Add several drops of HCl (which will displace a few drops of sample) and cap. If VOC samples are to be collected and/or stored temporarily in a syringe, I recommend 100% polyethylene/polypropylene ("two piece") syringes such as those made by Henke Sass Wolf GMBH (NormJect ®, 50 ml)) configured as shown in Figure 8. From personal experience I have found that small amounts of aromatic compounds (BTEX) can leach from the rubber parts of the rubber-tipped plunger found in common medical syringes. Rubber-tipped plunger syringes have less side-wall resistance and work much smoother than the 100% polyethylene/polypropylene syringes so I use medical syringes for "development" of the PushPoint. Standard medical syringes also work well for collecting samples for non-VOC analysis. I utilize handheld meters for pH, conductivity, redox, DO, etc. One can dispense sample from the syringe into these types of instruments for field measurements. The disposable syringes may be cleaned and reused several times, but because they are a friction fit; prolonged reuse results in scoring of the barrel which eventually causes air leaks.
- The 50 ml, 100% polyethylene/polypropylene "two piece" syringes mentioned above can be purchased directly from MHE, configured with tubing, clamp, and stopper as was the example syringe included with your order, or customized to suit your individual needs. If you would to make your own, the syringes that I am currently using are purchased from National Scientific. The tubing is Tygon 1/4"OD x 1/8" ID. Be sure to use some type of clamp at the tubing mouth to ensure a good seal at the sampler port. The entire syringe assemblies are now available from MHE at a reasonable cost.
- Headspace GC analysis of VOC's can be easily accomplished using 100% polyethylene/polypropylene syringes. Dispense all but 25 ml of the sampled groundwater from the syringe. Refill the syringe to the 50 ml mark with ambient air and then stopper the tubing (and heat the syringe in a water bath if desired) as shown in Figure 9. Shake the syringe assembly to equilibrate the VOC's in the sample with the contained atmosphere. Insert a GC syringe needle through the transfer tube into the sample syringe headspace and withdraw a sample for GC analysis.
- Occasionally a small amount sand and silt is withdrawn into the syringe or pump sampling stream, even after proper "development" of the PushPoint. This may be due to the nature of the geologic formation. This fine material is probably already at equilibrium with the surrounding groundwater and tests have shown that its presence should not influence analysis of VOC's in the groundwater sample. The sample can be transferred to its shipping container without this silt if the syringe is dispensed in such a manner as to let the solid material settle out in the syringe and not carry over to the shipping vial.
- The PushPoint has been used very successfully for underwater investigations using SCUBA equipment and a series of 100% polyethylene syringes. Once again, GPS equipment was used for location of the position that the divers collected groundwater samples of contaminant plume expression in the lake. Underwater notes (temperature, depth, observations, etc.) can be written directly on the sample syringes if they are pre-prepared with a strip of Scotch Magic Transparent Tape applied down the syringe body and writing is done with a soft pencil.

- The PushPoint may be used to inject nutrients or dyes into the sediments for field trials of biologic or geochemical testing or tracing groundwater paths. Simply insert the PushPoint to the desired depth, and after the guard-rod has been removed, connect a syringe or pump and slowly inject the desired fluid into the sediments, perhaps followed by a small amount of native groundwater to flush the instrument.
- The PushPoint is constructed of 316 stainless steel as mentioned previously. There are two places where the stainless parts are silver soldered together, the handle of the guard-rod and the handle on the PushPoint sampler. If the investigator is collecting samples for metals analysis, the silver solder joint on the guard-rod may impart trace levels metallic residue to the sampling port mouth. This has never caused a problem but the possibility exists. The silver solder that I use is Safety-Silv 45 which contains silver (45%), copper (30%),and zinc (25%). MSDS available upon request. In the unlikely event that these metals cause contamination of samples, MHE can produce specialty guard-rods that are not silver soldered. What can I say, these devices were originally built to sample for VOC's.
- These devices can be dedicated as semi-permanent underwater monitoring devices. If a PushPoint is inserted to the desired depth through a plate (such as the sampling platform mentioned earlier) that can lock the sampler at the correct insertion depth, a vinyl cap can be placed over the mouth of the sampler, and the sampler can be dedicated to that location so that future samples can be withdrawn when desired.
- It has been useful to carry several samplers in "quivers" made of 2" PVC tubing….one tube for (10-15) clean/assembled samplers and one tube for used samplers and their separated guard-rods. This arrangement protects both the investigators and the instruments.
- I have been using a Myron 6P Ultrameter available from www.ColeParmer.com for most of my work. This instrument measures pH, specific conductance, ORP, temperature, and TDS using only a few milliliters of sample and is perfectly suited to samples dispensed by syringe. The instrument is waterproof to 3 m. There will soon be a link on the MHEproducts.com web page.
- I have been using the Chemetrics Vacu-Vial technique (www.Chemtrics.com) in conjunction with Pushpoint sampling. I use this for dissolved oxygen and dissolved iron measurements. Many other analytical tests are also available such as nitrate, phenols, etc.. This analytical technique also works very well with samples collected in syringes. The sample is dispensed into a plastic cone until it overflows. The tip of an evacuated ampoule containing the necessary reagents is broken off at the bottom of the cone allowing the vacuum in the ampoule to pull in a aliquot of sample that has not contacted the atmosphere. The ampoule is shaken and is then is then placed as a cuvette into a handheld spectrophotometer. The results are nearly instantaneous and are displayed in ppm. There will soon be a link on the MHEproducts.com web page.

I hope that users will find many useful and innovative uses for this device. If you have other helpful information, uses, and advice concerning these samplers, please write or e-mail suggestions to me for inclusion in future manual revisions. I have finally started a web site: www.MHEproducts.com and have posted pictures, new products, and the latest version of this manual.

Thanks. MHE

MHE Products
3371 Sherman Rd.
East Tawas, MI 48730
USA

Phn: 989 362 5179
517 393 0948

e-mail: sales@MHEProducts.com

Figure 1

the PushPoint sampler

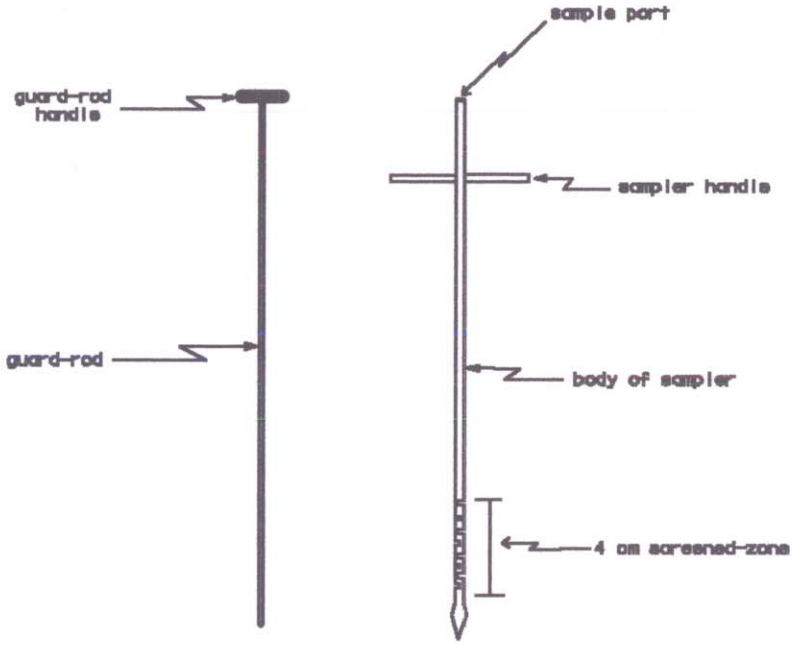

Fig. 1a

disassembled sampler

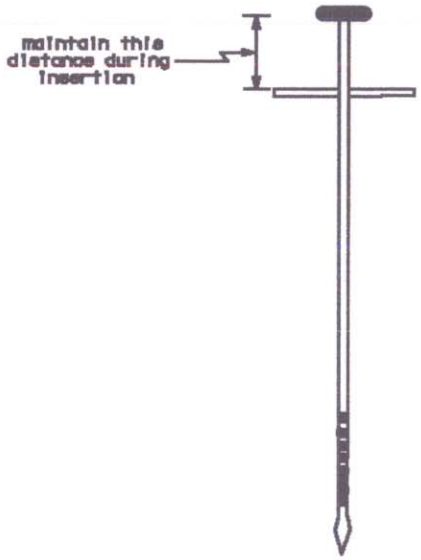

Fig. 1b

assembled sampler

MHE Products.com

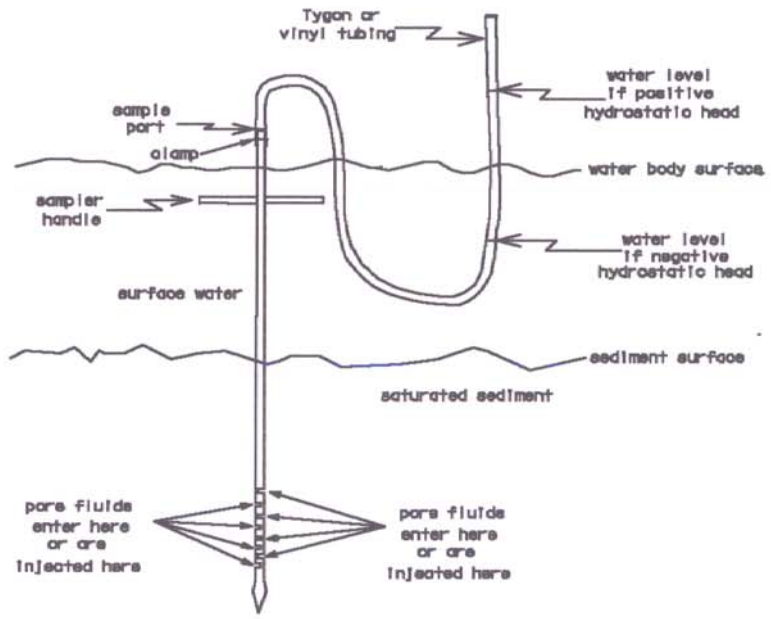

Figure 5

MHE Products.com

FlowTracker®

No other wading discharge device on the market comes with more useful options and accessories, making the FlowTracker a complete, turn-key solution.

The SonTek Deluxe wading rod, featuring a sturdy grip and bubble level

Rugged case provided with optional top-setting rod

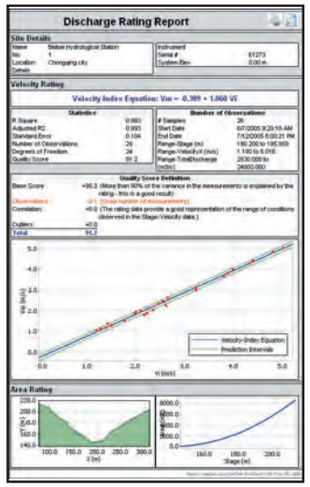

FlowPack Velocity Indexing report software

Standard Features

- Low-profile 2-D ADV water velocity sensor on 2m flexible cable (measure in depths down to 2cm (1 inch))
- Automatic discharge computation protocols (ISO/USGS mid-section, mean-section, and Japanese)
- Handheld keypad interface with real-time display
- Velocity methods: ISO, USGS, under ice, Kreps, 5-point, and multipoint
- Languages supported: English, Spanish, German, Italian, and French
- Recorder space: up to 64 discharge measurements or over 150,000 individual velocity samples
- Data Set Documentation: up to 20 values of time-stamped user comments including gauge height and rated flow
- QA/QC: automated data review and discharge uncertainty calculations
- Communication protocol: RS232
- Software: Windows software with diagnostic beam-check, recorder access, data visualization and customizable reports
- Compatible with FlowPack Velocity Indexing software
- Temperature sensor
- Hard plastic case

Optional Features

- 2-D/3-D ADV side-looking probe
- 5m flexible cable
- Deluxe SonTek two piece, top-setting wading rod kit (1.2m/4ft or 2.4m/8ft) including case and mounting brackets
- Wading rod mounting bracket for controller/keypad
- Offset mounting bracket for ADV probe

Specifications

- Velocity range: ±0.001 to 4.0 m/s (±0.003 to 13 ft/s)
- Velocity resolution: 0.0001 m/s
- Velocity accuracy: ±1% of measured velocity, ±0.25 cm/s
- Sampling volume location: 10 cm from center transducer
- Power supply: 8 AA batteries
- Typical battery life: 25+ hours continuous operation (alkaline batteries)
- Weight: 1.8 kg/4.0 lbs
- Probe width: 130 mm (5.1 inches)
- Handheld controller/keypad: temporarily submersible to 1m
- Operating temperature: -20° to 50° C
- Storage temperature: -20° to 50° C

SmartQC is a built-in quality control feature that gives you the added assurance your FlowTracker data is correct. With each measurement, data is compared to a variety of adaptive QC criteria to ensure the best measurement possible.

SmartQC is our exclusive promise your SonTek/YSI system is performing at optimum standards and that your data is precise, reliable and exceeds your service expectations.

SonTek/YSI
9940 Summer Ridge Road
San Diego, CA 92121
Tel: +1 (858) 546-8327
Fax: + (858) 546-8150
Email: inquiry@sontek.com
www.sontek.com

SonTek/YSI, founded in 1992 and advancing environmental science in over 100 countries, manufactures affordable, reliable acoustic Doppler instrumentation for water velocity measurement in oceans, rivers, lakes, harbors, estuaries, and laboratories. Headquarters are located in San Diego, California. Additional information can be found at www.sontek.com. SonTek/YSI is an employee-owned company.

SonTek, ADV and FlowTracker are trademarks of YSI Inc., Yellow Springs, OH, USA.
The FlowTracker is made in the USA. Lit. code S01-05-0411

FlowTracker®
Handheld ADV®

FlowTracker®
Handheld ADV®

Sound Principles. Good Advice.

Wading Discharge Measurement Device

Portable. Precise. Practical.

Designed with the field user in mind, this handheld ADV® (Acoustic Doppler Velocimeter) measures 2D or 3D currents, attaches easily to wading rods, and features an automatic discharge computation using a variety of international methods, including ISO and USGS standards. At the end of the data run, just press a button and the FlowTracker calculates the discharge for you!

The FlowTracker is the ideal solution if you're looking for:
- Help in challenging outdoor conditions
- A way to avoid recurring calibration/maintenance
- Tough equipment that doesn't break down all the time
- Unmatched performance in shallow water and low flows
- An easy-to-use interface
- Fewer steps to follow
- Built-in quality checks (SmartQC) so you know your data is right.

The handy FlowTracker keypad is custom-designed for both discharge measurements and general purpose water velocity. Featuring provisions for starting edges, multiple channels, and even ice covered water, it is ready for any environmental situation. In addition, the FlowTracker's intelligent algorithm automatically prompts you for the proper measurement method based on your previous measurement stations.

FlowTracker Software Speaks Your Language

The FlowTracker comes with user-friendly, data analysis software that helps you produce attractive, customizable and professional reports in minutes. FlowTracker software also supports several languages, making it an ideal solution for international applications.

Example of FlowTracker discharge software and reports

FlowTracker in the Field

With rugged construction for any climate and a backlit display easily read during both day and night, the FlowTracker goes wherever you need it to go.

- Natural Streams
- Irrigation Canals
- Mining Channels
- Water Treatment
- Weirs/Flumes
- Storm Water
- Open Channels
- Lakes

The FlowTracker Advantage

It doesn't matter if you are new to acoustic Doppler technology, or an old familiar friend, the FlowTracker provides unparalleled benefits you will only find with SonTek/YSI systems. Here is some of what sets the FlowTracker apart.

- Multi-language instrument and software (English, Spanish, French, Italian, and German)
- Proven velocity precision - accurate to as low as 0.001 m/s (0.003 ft/s) and up to 4.0 m/s (13 ft/s)
- Automatic discharge calculation - International techniques, including ISO and USGS standards
- Record changing gauge heights and rated flows, with comments in each measurement
- Automatic discharge uncertainty calculation to ISO standard. **A FlowTracker First!**
- Measure velocities in water as shallow as 2 cm (less than an 1 inch)
- Keypad interface with real-time velocity and flow display
- Automatic quality control for accurate data collection
- Two or three dimensional velocity measurement
- Recorded data is shielded from power loss
- Lightweight, rugged, and waterproof
- No calibration required - ever!
- Built-in temperature sensor

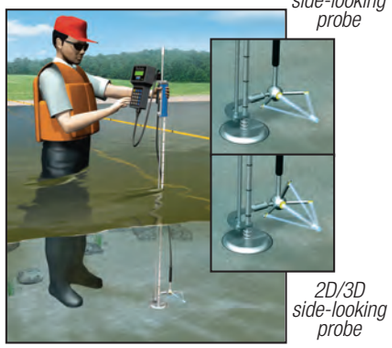

Example of typical stance and technique when using the FlowTracker

River Discharge and Flow

Spot Current Sampling

Irrigation Canals

SonTek®
YSI incorporated

Geoprobe® Hydraulic Profiling Tool (HPT) System

Standard Operating Procedure

Technical Bulletin No. MK3137

Prepared February 6, 2013

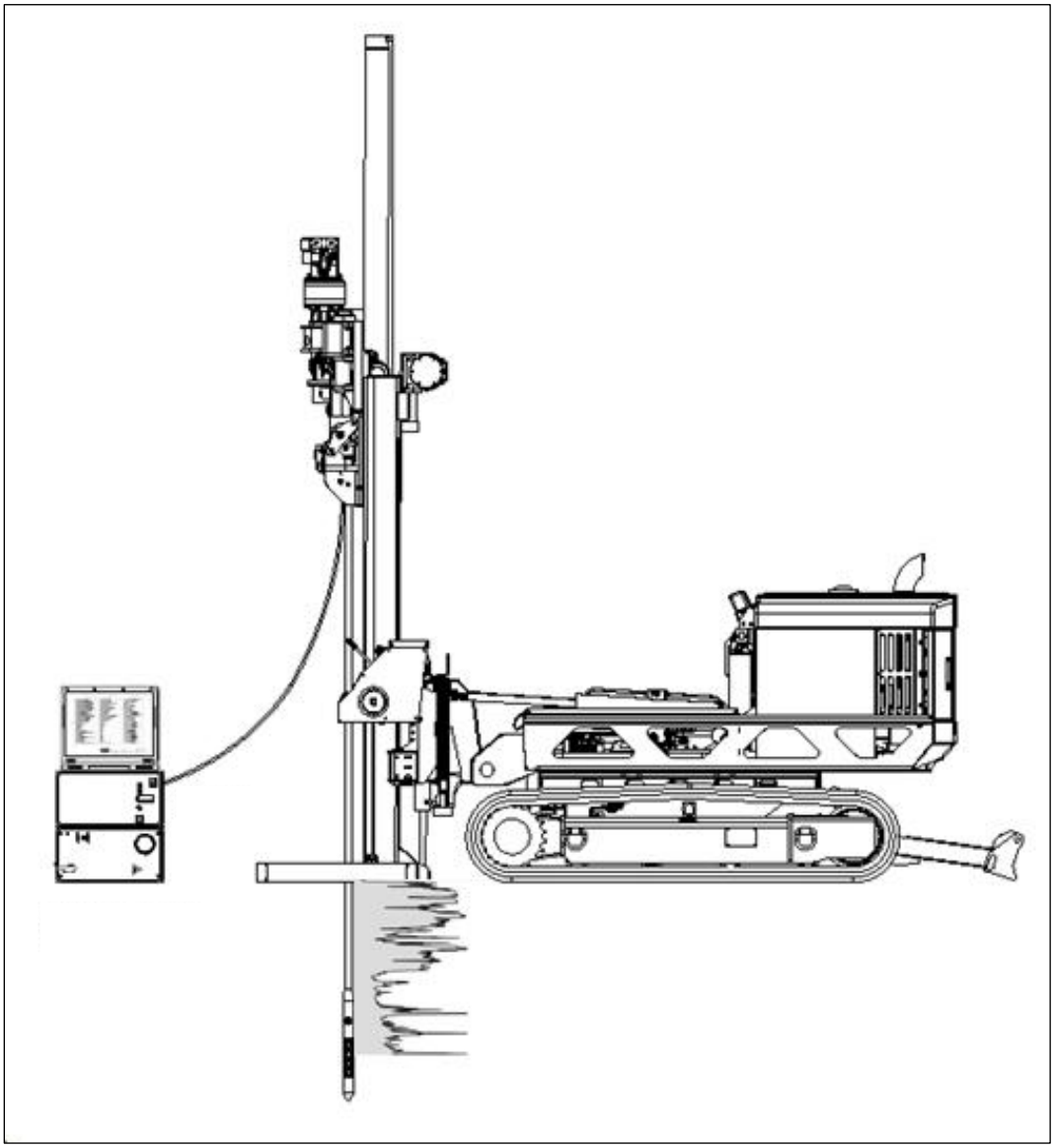

1.0 Objective

This document serves as the standard operating procedure for the Geoprobe® Hydraulic Profiling Tool (HPT) system. In this procedure, the HPT system is used to measure the pressure response of soil to injected water for identifying potential flow paths and to assist with characterization of soil type. This document has been updated from Geoprobe Systems® Technical Bulletin No. MK3137 (March 2007) to show the use of an FI6000 field instrument for HPT system control and data acquisition.

2.0 Background

2.1 Definitions

Geoprobe®*: A brand of high quality, hydraulically-powered machines that utilize both static force and percussion to advance sampling and logging tools into the subsurface. The Geoprobe® brand name refers to both machines and tools manufactured by Geoprobe Systems®, Salina, Kansas. Geoprobe® tools are used to perform soil core and soil gas sampling, groundwater sampling and testing, electrical conductivity and contaminant logging, grouting, and materials injection.

**Geoprobe® and Geoprobe Systems® are registered trademarks of Kejr, Inc., Salina, Kansas.*

Hydraulic Profiling Tool (HPT) System: A system manufactured by Geoprobe Systems® to evaluate the hydraulic behavior of subsurface soil. The tool is advanced through the subsurface at a constant rate while water is injected through a screen on the side of the probe. An in-line pressure sensor measures the pressure response of the soil to water injection. The pressure response identifies the relative ability of a soil to transmit water. Both pressure and flow rate are logged versus depth.

2.2 Introduction

The HPT system has been developed by Geoprobe Systems® for the geohydrologic characterization of soils. The HPT probe and logging system is able to quickly provide logs that are easily interpreted. HPT logs are used to indicate hydraulic conductivity, EC, hydrostatic profile, and areas of EC/permeability anomalies.

The HPT system is designed to evaluate the hydraulic behavior of unconsolidated materials. As the probe is pushed or hammered at 2 cm/s, clean water is pumped through a screen on the side of the HPT probe at a low flow rate, usually less than 300 mL/min. Injection pressure, which is monitored and plotted with depth, is an indication of the hydraulic properties of the soil. That is, a low pressure response would indicate a relatively large grain size, and the ability to easily transmit water. Conversely, a high HPT pressure response would indicate a relatively small grain size and the lack of ability to transmit water.

An electrical conductivity measurement array is built into the HPT probe. This allows the user to collect soil electrical conductivity (EC) data for lithologic interpretation. In general, the higher the electrical conductivity value, the smaller the grain size, and vice versa. However, other factors can affect EC, such as mineralogy and pore water chemistry (brines, extreme pH, contaminants). In contrast, HPT pressure response is independent of these chemical and mineralogical factors.

There are four primary components of the HPT system: the probe assembly, trunkline, HPT Flow Module (K6300 Series), and Field Instrument (FI6000 series). These primary components are shown in Figure 2.1.

The probe assembly consists of the HPT probe and connection section. This assembly houses the downhole HPT pressure transducer, water and electrical connections, and the probe body with the injection screen and electrical conductivity array.

Injecting water at a constant rate is integral to system operation. The HPT Flow Module houses the pump and associated hand crank mechanism used for adjusting the output flow of the HPT pump. The flow module also contains the HPT flow measurement and injection line pressure transducers. HPT flow can be adjusted from approximately 50 to 500 ml/min. The HPT pump is a positive displacement pumping device with minimal decrease in flow over the HPT operating pressure range. The flow module is equipped with an internal bypass that is factory set to open and return flow to the supply reservoir at a pressure of 120 psi. When the soil resistance to water injection becomes sufficiently great, the HPT Flow Module bypass will open, returning some or all of the pumped flow to the supply reservoir. The flow meter only measures flow leaving the module to the HPT probe. The HPT Flow Module is connected to the Field Instrument via a data cable.

Water and power are transmitted from the controller to the probe assembly via the HPT trunkline. The probe rods must be pre-strung with the trunkline before advancing the probe.

Data collection occurs in real time by connecting the controller to the field instrument. The field instrument collects, stores and displays transducer pressure, flow rate and electrical conductivity, line pressure, probe rate, and diagnostic parameters, with depth.

Since the HPT pressure response is analogous to the soil's ability to transmit water (and therefore the to the soil's dominant grain size), the HPT system can be used to identify potential contaminant migration pathways. Similarly, it can help identify zones for remedial material injection or provide qualitative guidance on how difficult injection may be in different zones of the formation.

The HPT system may be used to direct other investigation methods, such as soil and groundwater sampling and slug testing. HPT pressure response and EC data can help target zones of geologic and hydraulic interest, minimizing the number of soil and groundwater samples required to adequately develop a site conceptual model. When hydraulic conductivity values are required, the HPT system can also help the user identify zones to slug test, as well as the length of the screen required to adequately test the zone.

The HPT system also can be used to collect static water pressure data at discrete intervals during the logging process. These static pressure data can be used to calculate static water levels or to create a hydrostatic profile for the log.

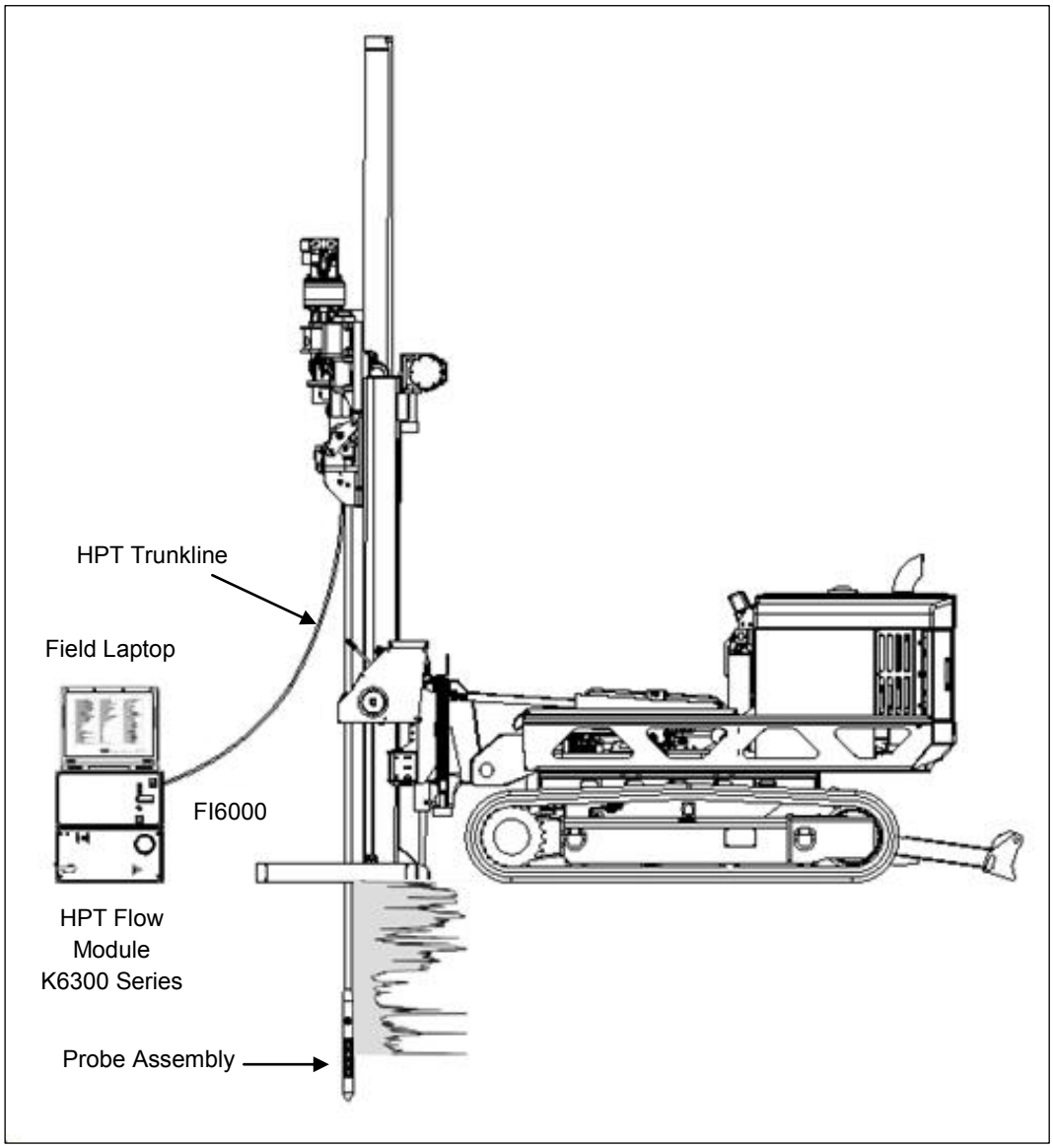

Figure 2.1: HPT Components

3.0 Tools and Equipment

The following equipment is required to perform and record an HPT log using a Geoprobe® 66- or 78-Series Direct Push Machine. Refer to Figures 3.1, 3.2, and 3.3 for identification of the specified parts.

Basic HPT System Components	Quantity	Part Number
Field Instrument, 120V	-1-	FI6000
Field Instrument, 220V	*	FI6003
HPT Acquisition Software	-1-	K6020
HPT Flow Module, 120V	-1-	K6300
HPT Flow Module, 220V	*	K6303
HPT Probe, 1.75 inch	-1-	K6050
MIP/HPT Connection Tube	-1-	31641
MIP/HPT Adapter 1.5 Pin x LB Box	-1-	20712
HPT Probe, 2.25 inch	**	K8050
2.25 Probe Rod, 24 inch	**	32656
2.25 Inch Water Seal Adapter	**	45170
2.25 Inch Water Seal Drive Head	**	48866
HPT Reference Tube 1.75 in HPT Probe	-1-	50344
HPT Reference Tube 2.25 in HPT Probe	**	50344
HPT Trunkline 150 ft.	-1-	K6415
HPT Trunkline 200 ft.	(optional)	K6420
HPT Service Kit *(contains the following)*	-1-	29028
O-Ring Pick	*-1-*	*AT102*
Term Block 4 POS Green	*-4-*	*7700*
Electrical Tape, 0.75-in. x 60-ft.	*-1-*	*6167*
Membrane Ratchet Wrench Asm	*-1-*	*48877*
Coupling 1/8 to 1/8 Tube	*-5-*	*48842*
Oetiker #7 Band Clamp 5.8 x 7mm	*-10-*	*48724*
HPT Sensor Module	*-2-*	*43327*
Silicone Dielectric Compound	*-1-*	*41274*
Butt Connector Red (10 pak)	*-2-*	*39807*
HPT Trunkline Seal Asm.	*-4-*	*37031*
Trunkline Seal Spacer (1 pair)	*-2-*	*36378*
O-Ring 120 BUNA 70	*-10-*	*3537*
HPT Screen Asm	*-4-*	*28895*
HPT Spring Washer (pkg 10)	*-1-*	*52399*
Tube Nylon 0.25 OD x 0.04 W Flexible	*-1-*	*20727*
Tubing 0.125 ID x 0.25 OD Polyur Yellow	*-1-*	*17957*
EC Probe Test Jig	-1-	SC563
EC Test Load	-1-	37785
Stringpot, 100-inch	-1-	SC160-100
Stringpot Cordset, 65-feet (19.8 m)	-1-	16401

*Use in place of 120V components if desired.

**Use in place of 1.75 inch probe and components if desired.

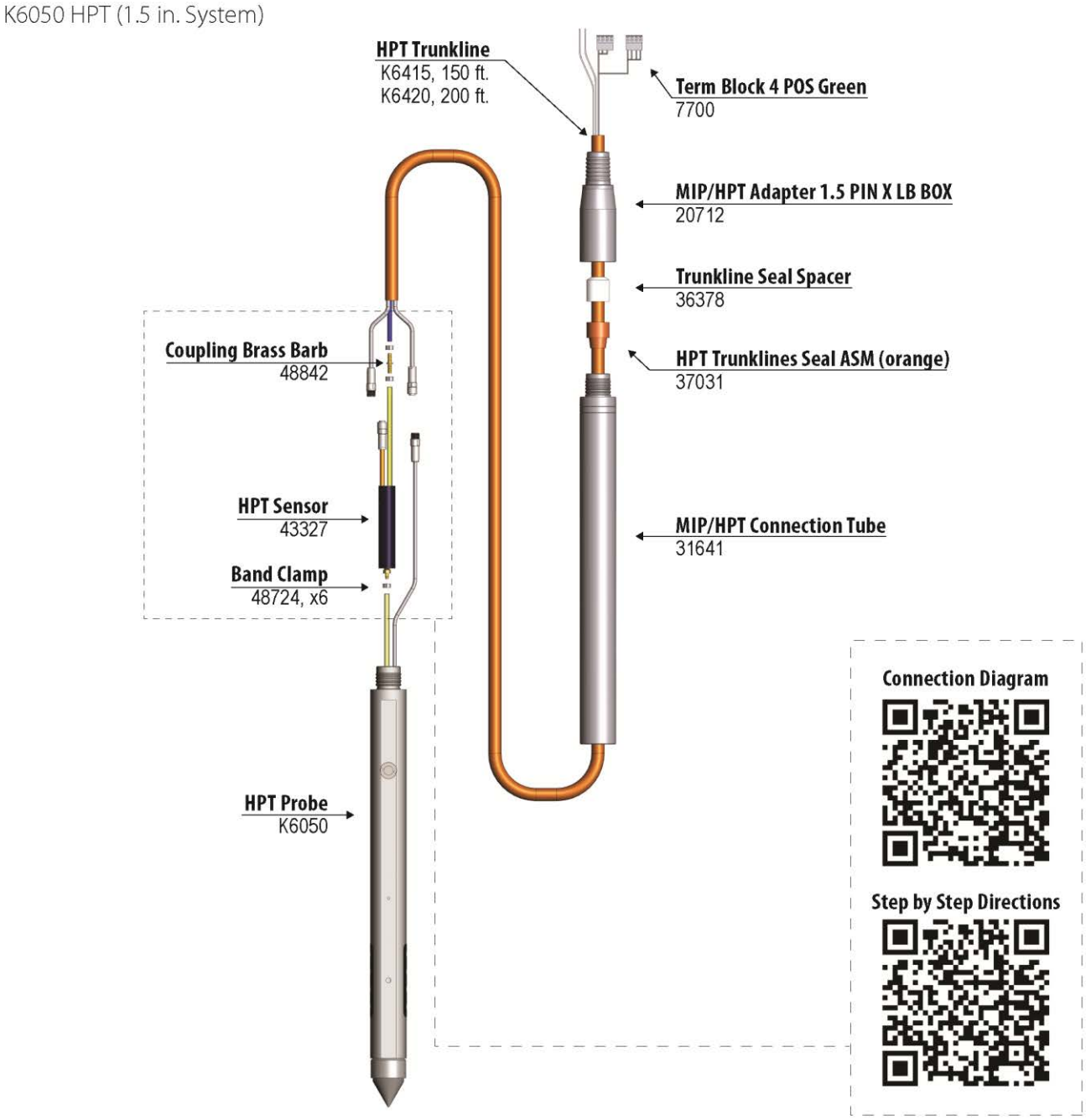

Figure 3.1 PN K6050 1.75 inch HPT Probe and components

http://geoprobe.com/tool-string-diagrams/k6050-hpt

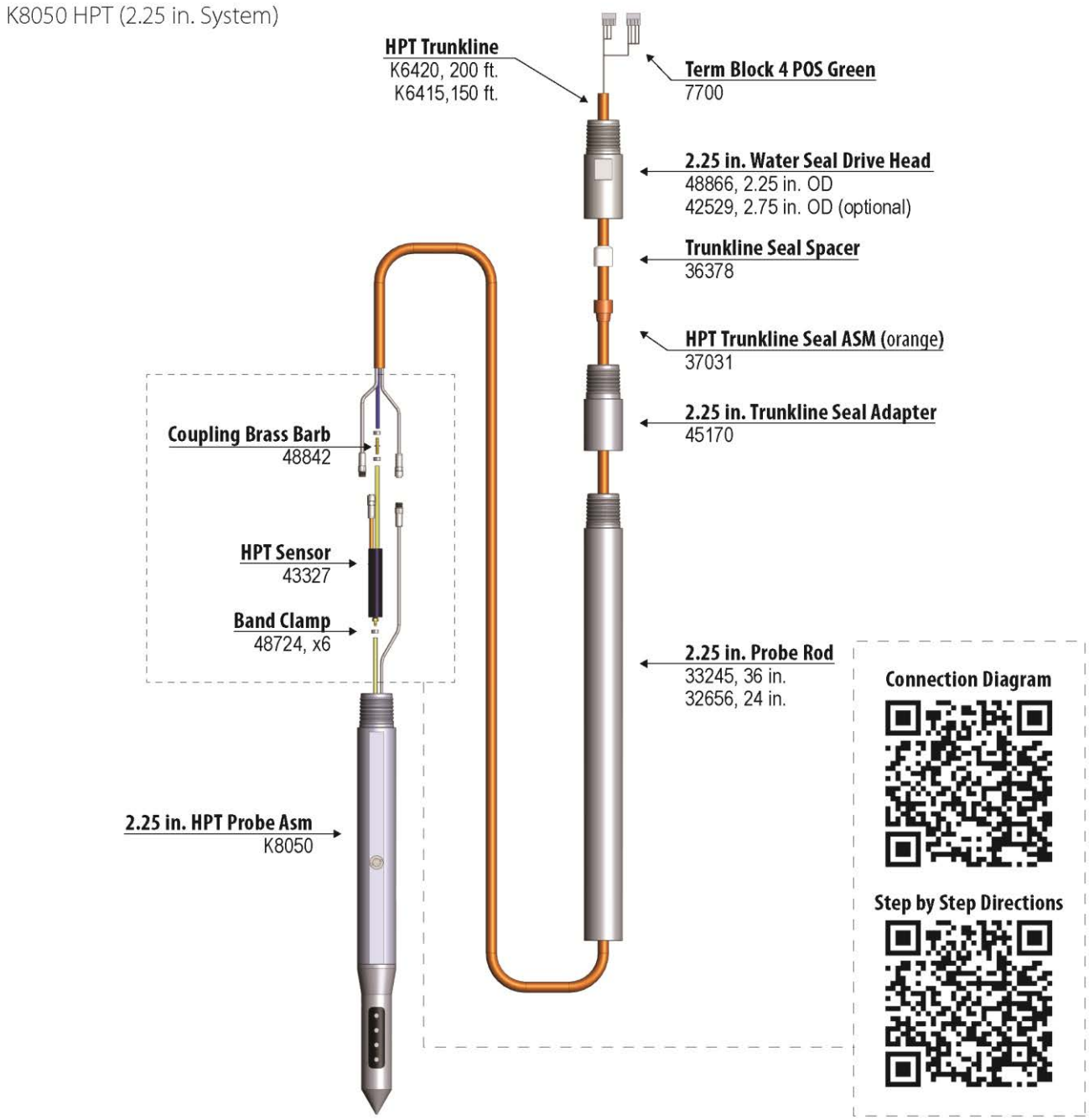

Figure 3.2 PN-K8050 2.25 inch HPT Probe and components

http://geoprobe.com/tool-string-diagrams/k8050-hpt

HPT Sensor Connection Diagram

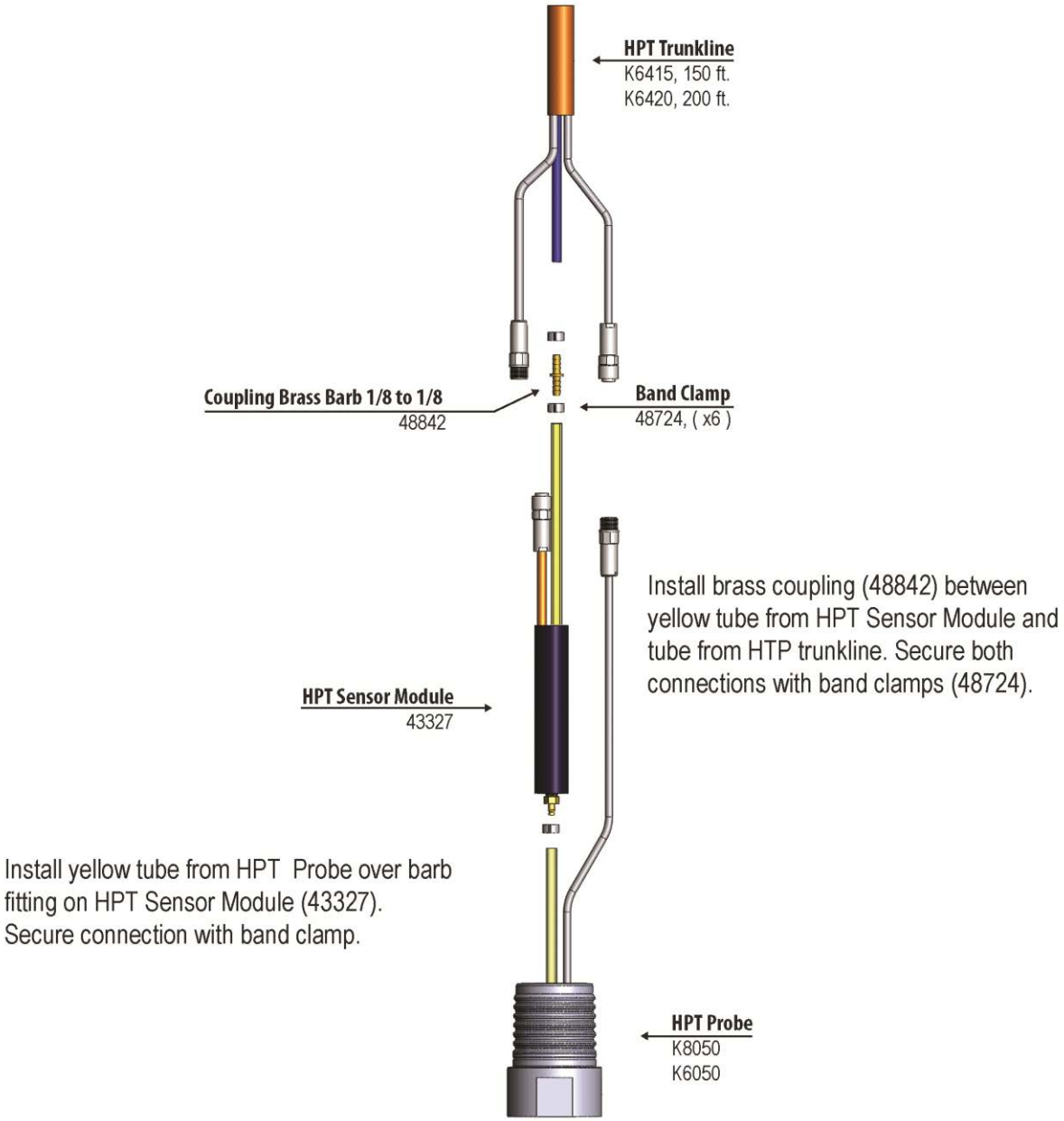

Figure 3.3 PN 43327 HPT Sensor Module Connection Diagram

http://geoprobe.com/tool-string-diagrams/hpt-sensor-connection-diagram

4.0 HPT Assembly

Refer to Appendix A

Threading the Rods

- Protect the end to be threaded through the rods with electrical tape or shrink tubing.
- Probe rods must alternate directions prior to threading the trunkline.
- The end of the HPT trunkline with chrome connectors is the downhole or probe end.
- The probe end of the trunkline will always enter the male end and exit the female end of the probe rods.
- The instrument end (no chrome connectors) will always enter the female end and exit the male end of the probe rods.
- After the trunkline is through the probe rods make sure the downhole end is threaded through the male end of the drive head and connection tube prior to connecting to the probe.
- The trunkline is now ready to connect to the instrument and HPT pressure sensor and probe.

5.0 Field Operation

5.1 Instrument Setup

1. Connect the HPT Controller (K6300), Field Instrument (FI6000) and laptop (Fig. 5.1) to an appropriate power source.

2. Connect the FI6000 to the K6300 using the 62-pin serial cable inserted into the acquisition port of each instrument.

3. Secure the EC wires into the Green terminal block connector and insert into the FI6000. The wires match to the EC dipoles in the following top down order when the probe tip is on the ground – white, black, yellow and blue (Fig 5.2).

4. Secure the HPT sensor wires to the appropriate inputs on the green terminal block connector and connect to the rear of the K6300. The top down order of the wires which is listed on the back of the instrument is: brown, orange, red and reserved (open).

5. Insert the nylon water line tubing from the trunkline into the water output connector on the back of the K6300.

6. Connect the HPT water supply hose into the input port on the rear of the K6300 and insert the filtered end of the supply line into a water supply tank. The bypass line connects to the bypass port and will follow the supply line back to the supply tank.

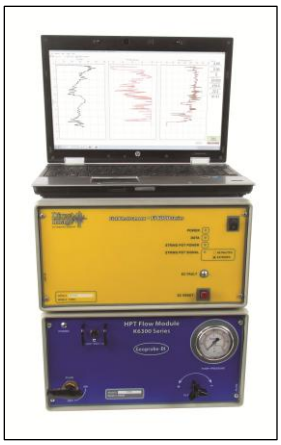

Figure 5.1: HPT Instrument Setup

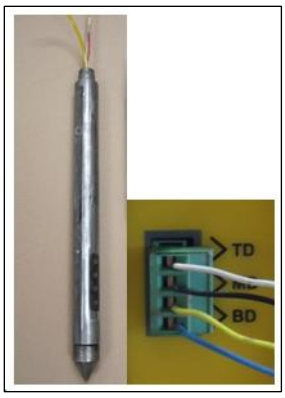

Figure 5.2: EC Wire Connections

7. Connect the USB cable between the USB interface port on the rear of the FI6000 to USB input on the field laptop computer.

8. A stringpot is required to measure depth. Bolt the stringpot onto the machine and the stringpot onto the bracket. Connect the plastic connector end of the stringpot cable to the “Stringpot” connector on the back of the Field Instrument and the metal connector to the stringpot. Pull the stringpot cable and attach to the stringpot piston weight which should be mounted to the probe machine foot and pull the keeper pin so the weight is free to move.

5.2 Starting the Software

1. Make sure the FI6000 and K6300 are connected together with the 62 pin cable, powered on and connected to the computer by the USB cable for the software to load properly.

2. Start the DI Acquisition Software which should open in HPT mode.

3. Select “Start New Log”. The software will request log information and have you browse for a storage location and create and save a file name for the log (Fig. 5.3).

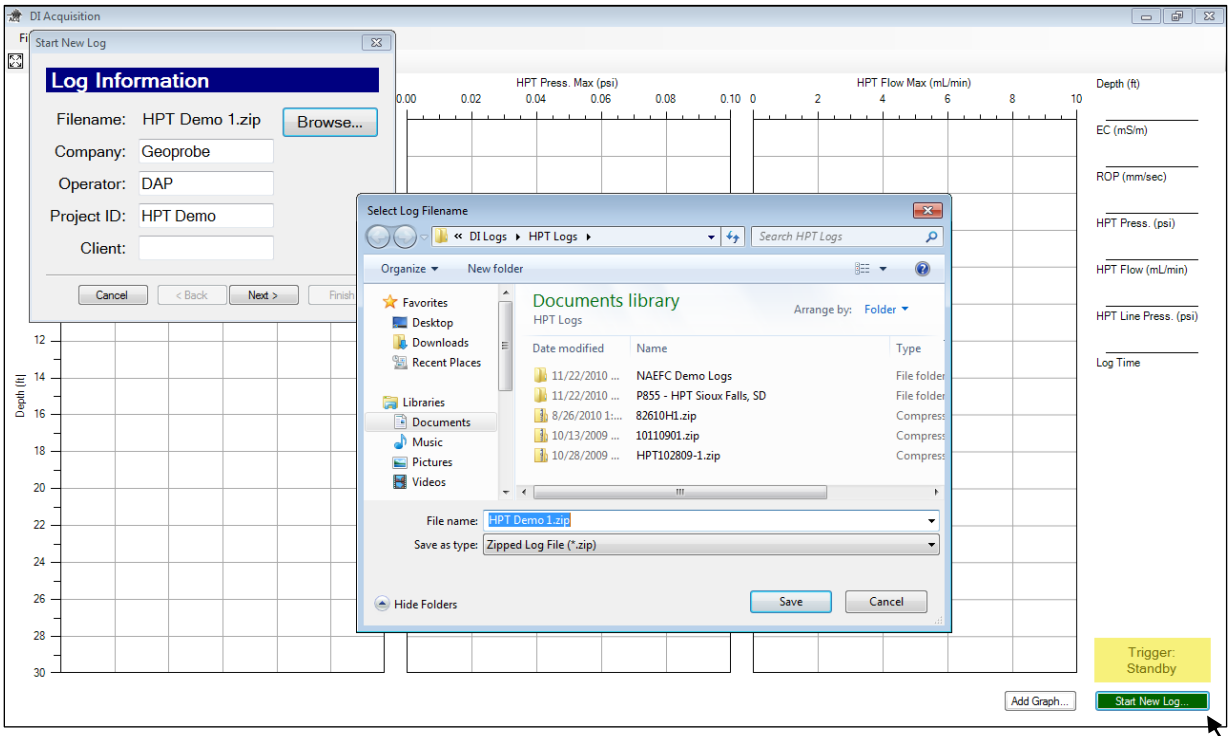

Figure 5.3: DI Acquisition Software – Start New Log Sequence

4. Select “Next”. If the software has been run before it will show a list of previous settings including Probe Type, EC Configuration, Stringpot length, rod length and HPT Transducer. If any of these have changed or you are unsure select “No” but if they are all the same select “yes”. If you select “No” the software will have you select the proper settings after the EC Load Test, if you selected “Yes” the selection of these settings will be bypassed.

5.3 QA Testing the EC and HPT Systems

Both the EC and HPT components must be tested before and after each log. This is required to ensure that the equipment is working properly and capable of generating good data before and after the log.

A. Electrical Conductivity Load Test

1. Secure the EC 3 position test load connector (37785) to the test input jack on the back of the Field Instrument.

2. Secure the EC Probe Test Jig into the input on the EC 3 position test load.

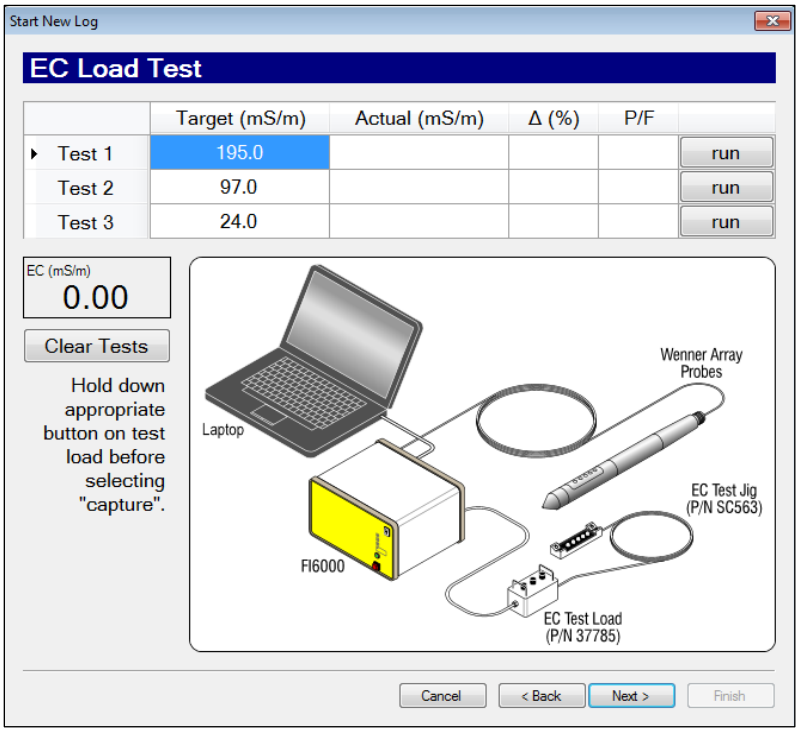

Figure 5.4: EC Load Test Screen

3. Clean and dry the EC dipoles as well as several inches of the probe body above the pins.

4. Place the EC Test Jig (SC563) so that the four springs on the test jig touch the four dipoles of the Wenner EC array (Fig. 5.4). Make sure the trunkline and test jig wires go in the same direction. The other spring on the test jig will ground the probe body above the Wenner array. Make sure the springs are pulled out far enough to make a solid contact on the dipoles.

5. When you get to the EC Load Test Screen and the EC test load and test jig are in place on the probe press down on the test 1 button on the test load and select “run” of Test 1 (Fig. 5.4). After 5 seconds the actual value will acquire and will pass if within 10% of the target value. Continue on with Test 2 and 3.

6. If any of the EC load tests fail do not pass within the allowed 10% acceptance range you can make adjustments on the test jig and rerun the test by just re-clicking the “run” button for an individual test.

7. If the tests continue to fail, select “Next” and the software will conduct the “EC Troubleshooting Tests.” The Instrument Calibration Tests (Fig. 5.5) checks of the calibration within the FI6000. If these are far out of range it will influence the EC Test load values and will need to return to Geoprobe® for repair. The “Probe Continuity and Isolation Tests” confirm each of the wires is a complete circuit and is fully isolated from one another. If a probe continuity test fails just outside the target range of <8ohms this is typically a contact issue with the test jig and the dipoles. If the continuity is in the thousands of ohms this is a break in the EC wire circuit – either in the probe, the trunkline or the connection between them.

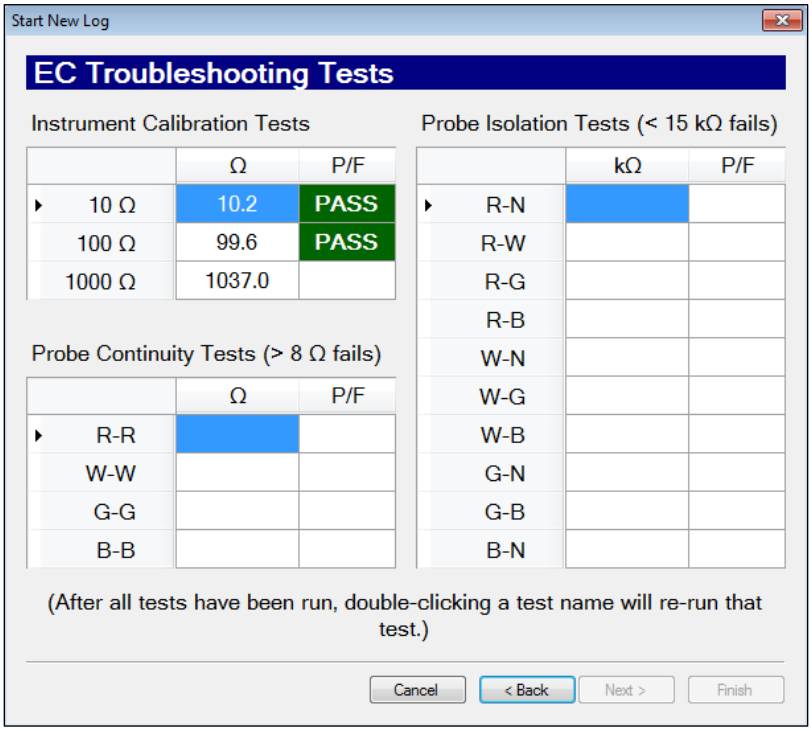

Figure 5.5: EC Troubleshooting Test Screen

8. When these tests are complete select next. In the next screen, the software will provide an EC option, if one is available. The EC Load Test will only work if EC can be operated in Wenner array meaning all of the EC wires in the continuity test pass with results <8ohms on the individual circuits. EC can be operated and collect good data in one odf the dipole areas: top, middle or bottom dipole. If the R-R test fails but the others pass the software will provide the option in the next screen to run either middle dipole or bottom dipole arrays. If R-R and G-G are both an incomplete circuit then no EC array is available to run and a new probe must be connected or the problem fixed. In the Wenner configuration it requires 2 adjacent dipoles to operate in dipole mode. If an EC array is chosen and run in this last manner then all of the EC information collected will be bad data.

B. HPT Reference Testing

Reference testing is done to ensure that the HPT pressure sensor is in working order and to evaluate the condition of the HPT injection screen. The HPT reference test calculates atmospheric pressure which is required to obtain static water level readings and to determine the estimated K values for the log in our post log processing software the DI Viewer.

Reference Test Procedure

1. Connect a clean water source to the HPT controller and turn on the pump.

2. Allow water to flow through the system long enough so that no air remains in the trunkline or probe (air in the system can cause inaccurate flow and pressure measurements).

3. Insert the probe into the HPT reference tube and allow the water to flow out the valve adjusting the flow rate to between 250-300ml/min (Fig. 5.5). Ensure that the reference tube is close to vertical.

4. With a stable pressure reading and the water flowing out of the valve select “capture” - bottom with flow (Fig. 5.6)

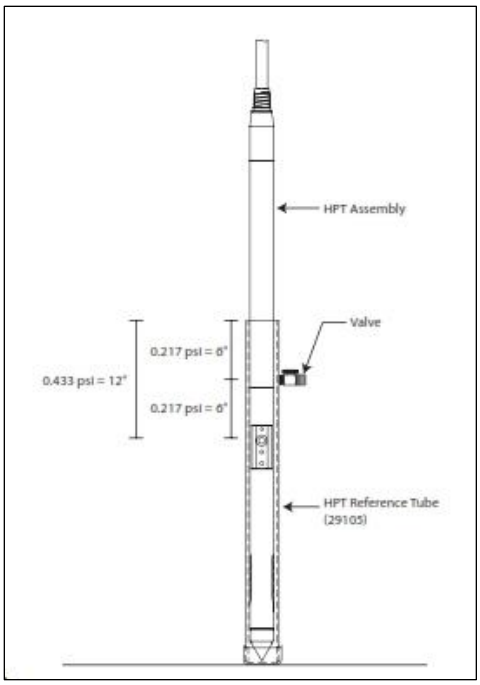

Figure 5.5: HPT Reference Test Setup

5. Close the valve and allow the water to overflow the top of the tube. When the pressure stabilizes select “capture” - top with flow.

6. Shut off the water flow. When the pressure stabilizes select “capture” - top flow = 0.

7. Open the valve and allow the water to drain out. When the pressure stabilizes select “capture” - bottom flow = 0.

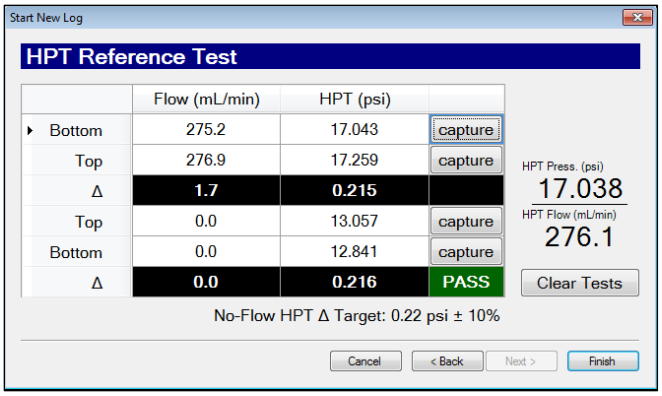

Figure 5.6: HPT Reference Test Screen

The HPT reference test reading flow = 0 is the true test of the condition of the pressure sensor and is the only sensor test to have a pass/fail reading on it. Ideally, the pressure difference between the top and bottom values will be 0.22 psi (1.52kPa). Typical pressure readings of the sensor will be in the 12PSI-15PSI (83kPa-104kPa) range.

5.4 Running an HPT Log

1. Place the rod wiper on the ground over the probing location and install the drive cushion in place of the anvil of the probing machine.

2. Place the probe tip in the center of the rod wiper, and place the slotted drive cap on top of the HPT probe.

3. Start the HPT water flow. **Note**: It is important that there is always water flowing when the probe is advanced to avoid soil particles from moving through the screen and causing problems with the pressure readings or causing a blockage behind the screen.

4. Adjust the probe so that it is vertical and advance the probe until the HPT screen is at the ground surface.

5. Click the trigger button in the lower right hand corner of computer screen. (The Trigger label will flash and the background will change from yellow to green).

9. Advance the probe at a rate of 2 cm/s. If necessary, feather the hammer to maintain this advance rate.

10. Perform a dissipation test (Section 5.4) in a zone of higher permeability indicated by lower HPT pressure.

11. After completing the log, press the trigger button again and select “Stop Log”.

12. Pull the rod string using either the rod grip pull system or a slotted pull cap. Run a post-log EC test and HPT response test (Section 5.2).

5.5 Performing a Dissipation Test

At least one dissipation test must be performed in order to calculate the static water level and estimated K readings from the log. Dissipation tests need to be performed below the water table and are best in zones of high permeability where the injection pressure can dissipate off quickly once the flow is shut off.

1. Stop in a zone of higher permeability which is indicated by lower HPT inject pressure.

2. Switch the DI Acquisition display view from the depth screen to the time screen by pressing the F10 key (F9 and F10 toggle between the depth and time screen of the acquisition software).

3. The screen will be grayed out which means that the data up to that point has not been saved. Select “Start Dissipation Test” which will turn the screen from gray to a white background indicating that you are now saving the time data.

4. Now shut the pump switch off and when the line pressure reaches zero, turn the flow valve off.

5. The HPT Pressure will begin to drop (dissipate the hydrostatic increase) and allow it to stabilize so very little visible drop in pressure is seen. When the pressure has fully dissipated turn the flow valve and the pump switch back on. When the flow and pressure are reestablished select "End Dissipation test."

6. Select F9 to return to the depth screen and advancing the tool into the ground.

   Note: Performing a dissipation test in zones of higher permeability may only take 30 seconds or so but if the HPT pressure was higher to start with it may take a long time up to several hours to dissipate off to equilibrium. This is why targeting the most permeable zone to perform the dissipation tests is most desirable.

6.0 HPT Log Interpretation

Below is a typical HPT log, which consists of both the HPT pressure response and electrical conductivity. In general, both HPT pressure and EC values increase with decreasing grain size, and decrease with increasing grain size. The log in Figure 6.1 shows good consistency between EC and HPT pressure for the majority of the log. It is only between 32'-42'bgs that we see some divergence of the graphs with higher HPT pressure while the EC readings remained low. This can happen for reasons such as poor mineralogy of the soil. Refusal was encountered in a shale layer beginning at 75'bgs and it can be noted that as we enter this layer the HPT flow gets suppressed as the pressure reaches a maximum value of 100PSI (690kPa). The second graph of the log shows the hydrostatic profile on the secondary series of the graph. The hydrostatic profile has 2 black triangles which indicate where dissipation tests were run and used to calculate the profile. The red circle indicates the calculated water table based upon where the hydrostatic profile intersects atmospheric pressure. The fourth graph is the estimate K or groundwater flow graph. This is calculated based upon HPT pressure and HPT flow relationships. Less permeable soil will have less groundwater flow.

It is fairly common to see zones where EC readings and HPT pressure contradict one another. In cases where EC readings are low and HPT pressure trends higher as in the log in Figure 6.1 the following are possible reasons:

- Poor mineralogy of the soil particles resulting in silt and clay soils with very low EC readings. This is seen in many locations along the east coast of the United States.
- Silts intermixed with sand particles.
- Weathered bedrock may have low EC but would have low permeability.

Where we have cases of higher EC and lower HPT pressure typically is due to an ionic influence in the soil or groundwater. These higher EC readings can range from very slight to higher than typical soil readings. Very high EC readings can occur when the probe contacts metallic objects in the soil which will ground them out and typically will cause hard sharp spikes in the EC data.

- Chloride or other ionic contaminant (sea water, injection materials)
- Sea Water intrusion
- Wire, metal objects or Slag

In cases where HPT and EC do not confirm one another it is important to take confirmation soil and/or groundwater samples to help understand the difference between the two graphs.

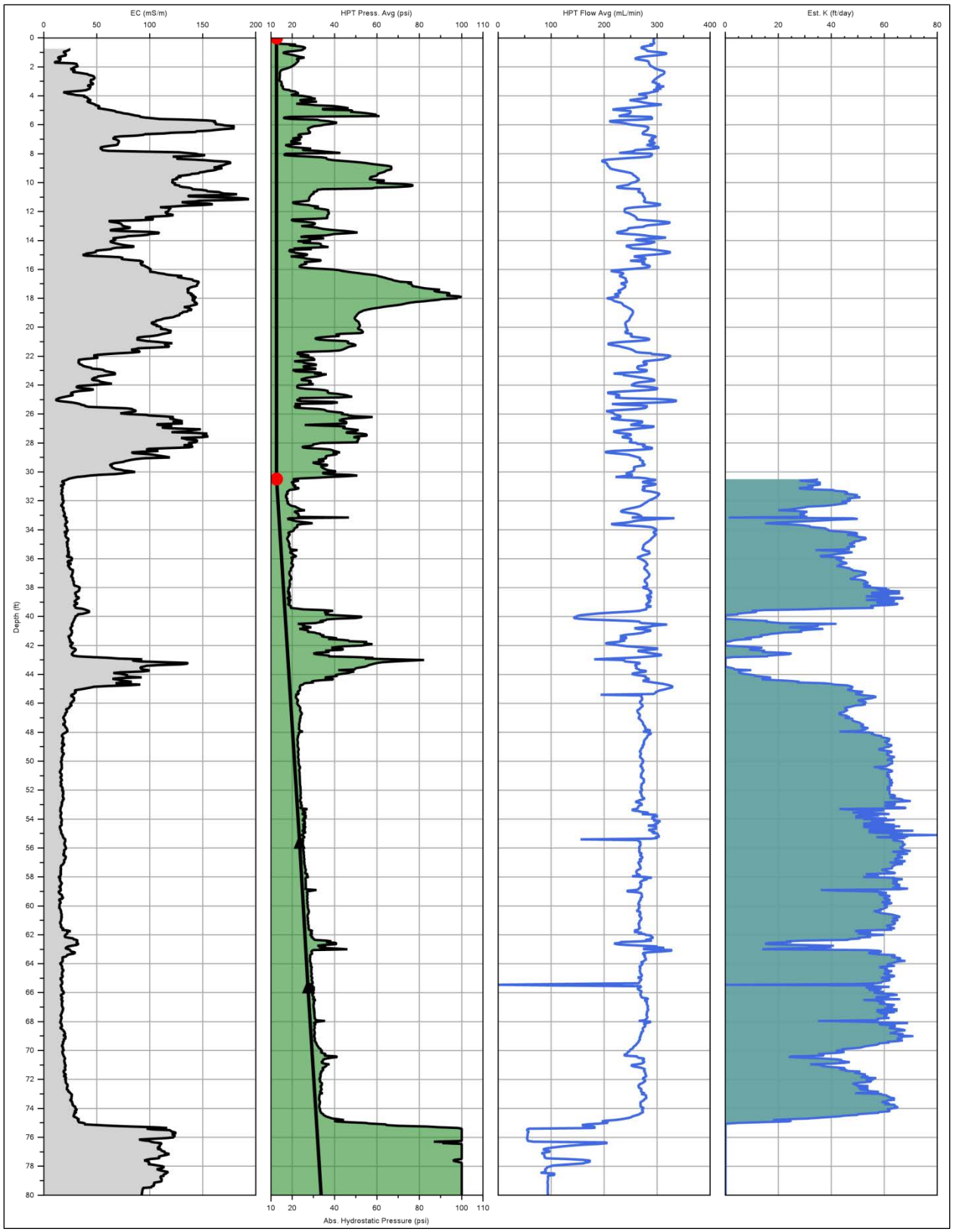

Figure 6.1: HPT Log file showing (left to right):
Electrical Conductivity (EC), HPT Injection Pressure with Hydrostatic Profile, HPT Flow, and Estimated K

7.0 Troubleshooting

7.1 Using the HPT Controller Test Load

The HPT Controller Test Load (32441) is included with the HPT Controller to help troubleshoot the HPT pressure sensor, trunkline, and controller. If there is a major problem with the HPT pressure sensor or the system wiring the system will not read anywhere close to atmospheric pressure with the probe at the surface. Commonly if the HPT sensor has broken the software will read either a maximum or minimum value which would be 100PSI or 0PSI (690kPa or 0KPa). If there is damaged wiring or nothing is connected to the controller the system typically reads 50PSI (345kPa).

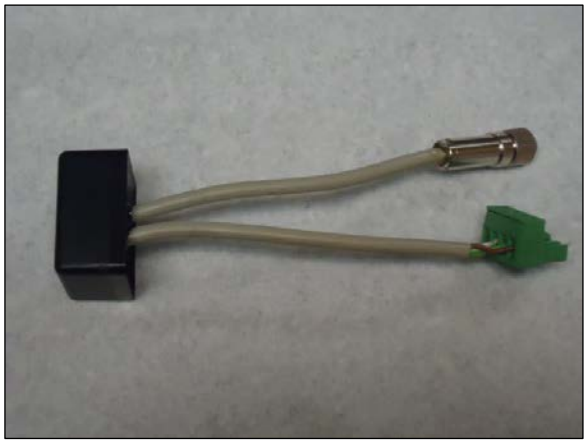

Figure 7.1: HPT Test Load PN32441

When connected to either the trunkline (in place of the pressure sensor), or the controller (in place of the trunkline and pressure sensor), the test load will cause the pressure sensor value to read a pressure ranging from approximately 25PSI-35PSI (172kPa – 241kPa).

To use the test load, set up the system as previously described. Turn on both the field instrument and HPT controller and start the HPT software. Plug the green wire connector of the test load into the HPT sensor connector on the back of the HPT controller. If the pressure sensor value reads somewhere around 30PSI (207kPa), the controller is able to properly read pressures so the problem is in the trunkline or the HPT sensor. If HPT controller has not moved from what it was reading or is way out from the expected value of the load test the HPT controller may require servicing. Contact Geoprobe Systems® for service.

Next, connect the HPT sensor wires of the trunkline to the controller with the green connector and then connect the test load to the female chrome connector on the downhole end of the trunkline in place of the pressure sensor. Again, the pressure value displayed on the field instrument should be somewhere around 30PSI (207kPa) and should be the same as what was seen with the load test connected into the controller. If the load test through the trunkline is around 30PSI (207kPa), then both the trunkline and the controller are working properly and the problem is in the HPT sensor. If it is not, the trunkline may be defective and should be replaced. Before restringing another HPT trunkline, first connect the new trunkline sensor wires into the HPT controller and the downhole end into the test load. If the system now reads in the expected test load range the trunkline needs replacing.

Finally, connect the pressure sensor to the trunkline. If it reads atmospheric pressure, approximately 12PSI-15PSI (83kPa-104kPa), then the pressure transducer is functioning properly. However, if it does not, replace the sensor with a new one and re-check the pressure reading. Be sure to enter the new sensor calibration values into the software prior to starting the new log. Additional pressure sensors purchased from Geoprobe®.

7.2 Common Problems

Problem: The pressure transducer is hooked up to the trunkline, but the software is reporting a reading of ~ 50PSI (345kPa).
Solution: Make sure that the trunkline wires are secured to the green terminal blocks and plugged in to the back of the HPT controller. Check components using the HPT Controller Test Load (Section 7.1).

Problem: The pressure transducer is hooked up to the trunkline, but the software is reporting a reading of 100PSI or 0PSI (690kPa or 0KPa).
Solution: Make sure all of the connections are good and recheck the pressure reading. If still bad connect a new HPT pressure sensor onto the trunkline and see if it reads atmospheric pressure. If not check all the components using the HPT Controller Test Load (Section 7.1).

Problem: The pressure with flow values keep drifting when water is flowing out the port or over the top of the reference tube.
Solution 1: If the trunkline was just connected and flow was just started air may still be in the lines. Allow the water to continue to flow through system which will purge out the remaining air. When it appears that most of the air is out of the lines pressing your finger over the injection screen for a few seconds can help to drive out any remaining air from the trunkline.
Solution 2: There may be debris behind the screen. Remove the HPT injection screen with the membrane wrench and turn the water flow on, place your finger over the open port to drive out debris. Replace the screen and retry the reference test with flow.
Solution 3: If the with flow pressure values continue to not settle down and provide close to the expected difference for a 6" water column then the problem may be inside the HPT control box. When you remove the cover of the HPT controller there will be a brass filter located on the left side when viewing from the front of the instrument (Fig 7.2). Particulates and precipitates can collect inside this filter causing problems with HPT pressure stability. Remove this filter and open up using appropriate wrenches. The filter can be easily cleaned by rinsing water over the screen. Reassemble and return to its proper location inside the control box. Resume reference testing the system.

Figure 7.2: Location of Inline Filter in K6300 and buildup of particulates in filter.

Problem: EC won't pass the QA tests.

Solution: Check the trunkline to probe EC connections ensuring they are tight. Run the troubleshooting tests (Section 4.3A), test EC on a new probe.

APPENDIX A

Making HPT Probe, Sensor and Trunkline Connections

http://geoprobe.com/literature/hpt-sensor-connection-tutorial

A DIVISION OF KEJR, INC.
-Corporate Offices-
601 N. Broadway • Salina, KS 67401
1-800-436-7762 • Fax 785-825-2097
www.geoprobe-DI.com

GEOPROBE® SCREEN POINT 16 GROUNDWATER SAMPLER

STANDARD OPERATING PROCEDURE

Technical Bulletin No. MK3142

PREPARED: November, 2006

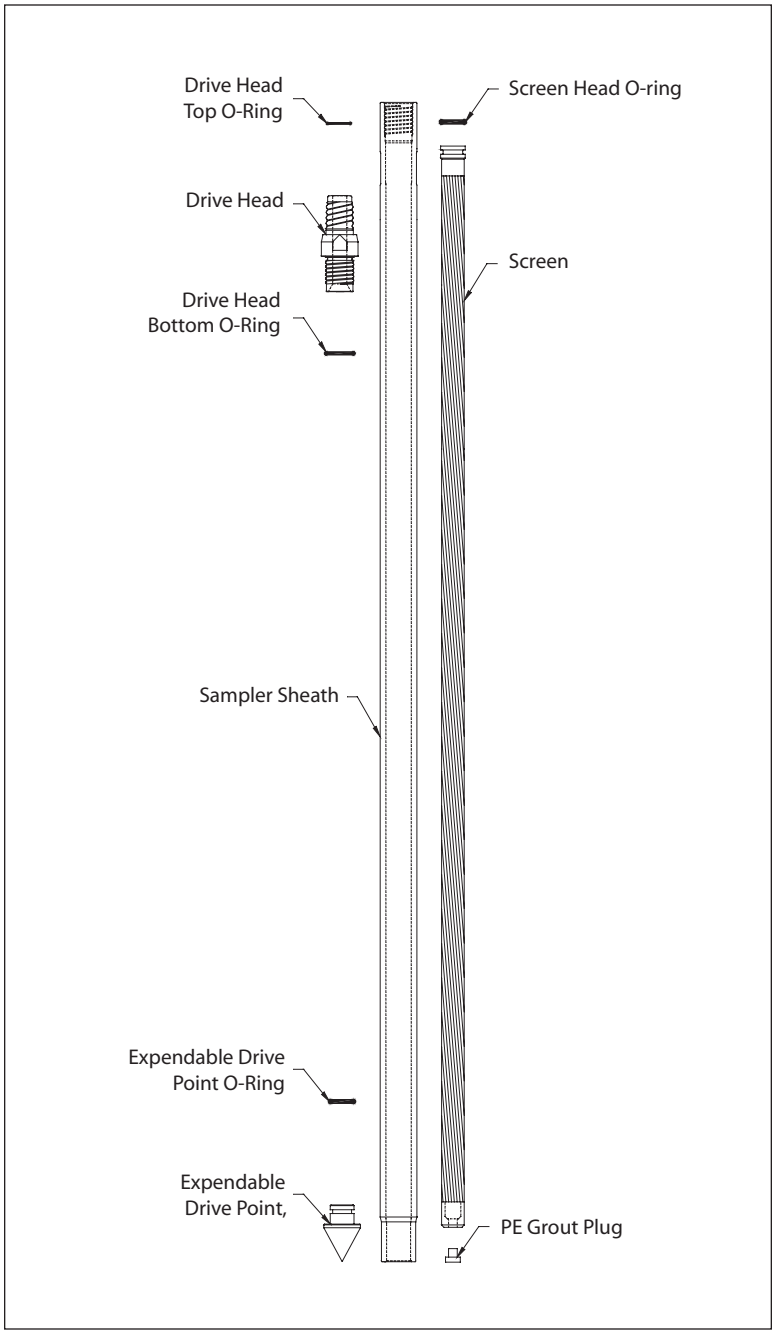

GEOPROBE® SCREEN POINT 16 GROUNDWATER SAMPLER PARTS

Geoprobe® and Geoprobe Systems®, Macro-Core® and Direct Image® are Registered Trademarks of Kejr, Inc., Salina, Kansas

Screen Point 16 Groundwater Sampler is manufactured under U.S. Patent 5,612,498

COPYRIGHT© 2006 by Kejr, Inc.
ALL RIGHTS RESERVED.
No part of this publication may be reproduced or transmitted in any form or by any means, electronic or mechanical, including photocopy, recording, or any information storage and retrieval system, without permission in writing from Kejr, Inc.

1.0 OBJECTIVE

The objective of this procedure is to drive a sealed stainless steel or PVC screen to depth, deploy the screen, obtain a representative water sample from the screen interval, and grout the probe hole during abandonment. The Screen Point 16 Groundwater Sampler enables the operator to conduct abandonment grouting that meets American Society for Testing and Materials (ASTM) Method D 5299 requirements for decommissioning wells and borings for environmental activities (ASTM 1993).

2.0 BACKGROUND

2.1 Definitions

Geoprobe®: A brand name of high quality, hydraulically powered machines that utilize both static force and percussion to advance sampling and logging tools into the subsurface. The Geoprobe® brand name refers to both machines and tools manufactured by Geoprobe Systems®, Salina, Kansas. Geoprobe® tools are used to perform soil core and soil gas sampling, groundwater sampling and monitoring, soil conductivity and contaminant logging, grouting, and materials injection.

Screen Point 16 (SP16) Groundwater Sampler: A direct push device consisting of a PVC or stainless steel screen that is driven to depth within a sealed, steel sheath and then deployed for the collection of representative groundwater samples. The assembled SP16 Sampler is approximately 51.5 inches (1308 mm) long with an OD of 1.625 inches (41 mm). Upon deployment, up to 41 inches (1041 mm) of screen can be exposed to the formation. The Screen Point 16 Groundwater Sampler is designed for use with 1.5-inch probe rods and machines equipped with the more powerful GH60 Hydraulic Hammer. Operators with GH40 Series hammers may chose to use this sampler in soils where driving is difficult.

Rod Grip Pull System: An attachment mounted on the hydraulic hammer of a direct push machine which makes it possible to retract the tool string with extension rods or flexible tubing protruding from the top of the probe rods. The Rod Grip Pull System includes a pull block with rod grip jaws that are bolted directly to the machine. A removable handle assembly straddles the tool string while hooking onto the pull block to effectively grip the probe rods as the hammer is raised. A separate handle assembly is required for each probe rod diameter.

2.2 Discussion

In this procedure, the assembled Screen Point 16 Groundwater Sampler (Fig. 2.1A) is threaded onto the leading end of a Geoprobe® probe rod and advanced into the subsurface with a Geoprobe® direct push machine. Additional probe rods are added incrementally and advanced until the desired sampling interval is reached. While the sampler is advanced to depth, O-ring seals at each rod joint, the drive head, and the expendable drive point provide a watertight system. This system eliminates the threat of formation fluids entering the screen before deployment and assures sample integrity.

Once at the desired sampling interval, extension rods are sent downhole until the leading rod contacts the bottom of the sampler screen. The tool string is then retracted approximately 44 inches (1118 mm) while the screen is held in place with the extension rods (Fig. 2.1B). As the tool string is retracted, the expendable point is released from the sampler sheath. The tool string and sheath may be retracted the full length of the screen or as little as a few inches if a small sampling interval is desired.

There are three types of screens that can be used in the Screen Point 16 Groundwater Sampler. Two of the these, a stainless steel screen with a standard slot size of 0.004 inches (0.10 mm) and a PVC screen with a standard slot size of 0.010 inches (0.25 mm), are recovered with the tool string after sampling. The third screen is also manufactured from PVC with a standard slot size of 0.010 inches (0.25 mm), but is designed to be left downhole when sampling is complete. This disposable screen has an exposed screen length of approximately 43 inches (1092 mm). The two screens that are recovered with the sampler both have an exposed screen length of approximately 41 inches (1041 mm).

(continued on following page)

An O-ring on the head of the stainless steel screens maintains a seal at the top of the screen. As a result, any liquid entering the sampler during screen deployment must first pass through the screen. PVC screens do not require an O-ring because the tolerance between the screen head and sampler sheath is near that of the screen slot size.

The screens are constructed such that flexible tubing, a mini-bailer, or a small-diameter bladder pump can be inserted into the screen cavity. This makes direct sampling possible from anywhere within the saturated zone. A removable plug in the lower end of the screens allows the user to grout as the sampler is extracted for further use.

Groundwater samples can be obtained in a number of ways. A common method utilizes polyethylene (TB25L) or Teflon® (TB25T) tubing and a Check Valve Assembly (GW4210). The check valve (with check ball) is attached to one end of the tubing and inserted down the casing until it is immersed in groundwater. Water is pumped through the tubing and to the ground surface by oscillating the tubing up and down.

An alternative means of collecting groundwater samples is to attach a peristaltic or vacuum pump to the tubing. This method is limited in that water can be pumped to the surface from a maximum depth of approximately 26 feet (8 m). Another technique for groundwater sampling is to use a stainless steel Mini-Bailer Assembly (GW41). The mini-bailer is lowered down the inside of the casing below the water level where it fills with water and is then retrieved from the casing.

The latest option for collecting groundwater from the SP16 sampler is to utilize a Geoprobe® MB470 Series Mechanical Bladder Pump (MBP)*. The MBP may be used to meet requirements of the low-flow sampling protocol (Puls and Barcelona 1996, ASTM 2003). Through participation in a U.S. EPA Environmental Technology Verification study, it was confirmed that the MB470 can provide representative samples (EPA 2003).

**The Mechanical Bladder Pump is manufactured under U.S. Patent No. 6,877,965 issued April 12, 2005.*

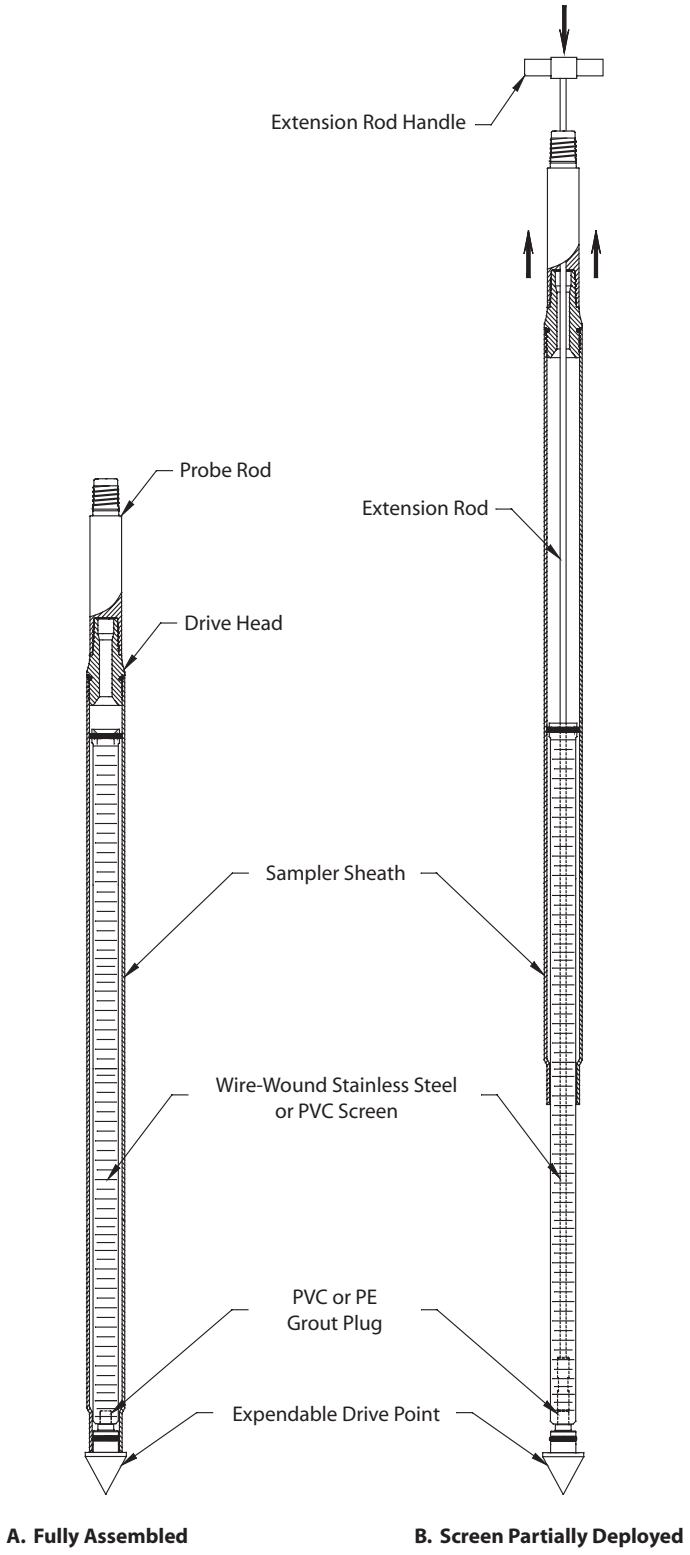

FIGURE 2.1
Screen Point 16 Groundwater Sampler

3.0 TOOLS AND EQUIPMENT

The following tools and equipment can be used to successfully recover representative groundwater samples with the Geoprobe® Screen Point 16 Groundwater Sampler. Refer to Figures 3.1 and 3.2 for identification of the specified parts. Tools are listed below for the most common SP16 / 1.5-inch probe rod configurations. Additional parts for optional rod sizes and accessories are listed in Appendix A.

SP16 Sampler Parts	**Part Number**
SP16 Sampler Sheath	15187
SP16 Drive Head, 0.5-inch bore, 1.5-inch rods*	18307
SP16 O-ring Service Kit, 1.5-inch rods *(includes 4 each of the O-ring packets below)*	15844
O-rings for Top of SP16 Drive Head, 1.5-inch rods only (Pkt. of 25)	*15389*
O-rings for Bottom of SP16 Drive Head (Pkt. of 25)	*13196*
O-rings for GW1520 Screen Head (Pkt. of 25)	*GW1520R*
O-rings for SP16 Expendable Drive Point (Pkt. of 25)	*GW1555R*
Screen, Wire-Wound Stainless Steel, 4-Slot*	GW1520
Grout Plugs, PE (Pkg. of 25)	GW1552K
Expendable Drive Points, steel, 1.625-inch OD (Pkg. of 25)*	GW1555K
Screen Point 16 Groundwater Sampler Kit, 1.5-inch Probe Rods *(includes 1 each of: 15187, 18307, 15844, GW1520, GW1535, GW1540, GW1555K, and GW1552K)*	15770

Probe Rods and Probe Rod Accessories	**Part Number**
Drive Cap, 1.5-inch probe rods, threadless, (for GH60 Hammer)	12787
Pull Cap, 1.5-inch probe rods	15090
Probe Rod, 1.5-inch x 60-inch*	11121

Extension Rods and Extension Rod Accessories	**Part Number**
Screen Push Adapter	GW1535
Grout Plug Push Adapter	GW1540
Extension Rod, 60-inch*	10073
Extension Rod Coupler	AT68
Extension Rod Handle	AT69
Extension Rod Jig	AT690
Extension Rod Quick Link Coupler, pin	AT695
Extension Rod Quick Link Coupler, box	AT696

Grout Accessories	**Part Number**
Grout Nozzle, for 0.375-inch OD tubing	GW1545
High-Pressure Nylon Tubing, 0.375-inch OD / 0.25-inch ID, 100-ft. (30 m)	11633
Grout Machine, self-contained*	GS1000
Grout System Accossories Package, 1.5-inch rods	GS1015

Groundwater Purging and Sampling Accessories	**Part Number**
Polyethylene Tubing, 0.375-inch OD, 500 ft.*	TB25L
Check Valve Assembly, 0.375-inch OD Tubing*	GW4210
Water Level Meter, 0.438-inch OD Probe, 100 ft. cable*	GW2000
Mechanical Bladder Pump**	MB470
Mini Bailer Assembly, stainless steel	GW41

Additional Tools	**Part Number**
Adjustable Wrench, 6.0-inch	FA200
Adjustable Wrench, 10.0-inch	FA201
Pipe Wrenches	NA

* See Appendix A for additional tooling options.

** Refer to the Standard Operating Procedure (SOP) for the Mechanical Bladder Pump (Technical Bulletin No. MK3013) for additional tooling needs.

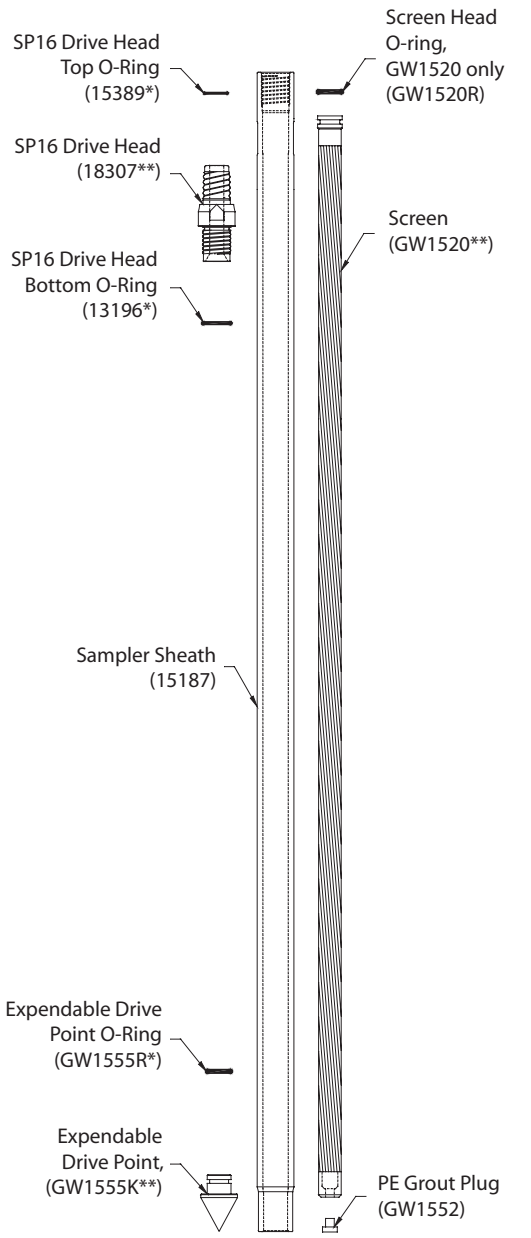

* Included in the SP16 O-ring Service Kit (15844)
** Part numbers show most common tool configuration. See Appendix A for alternative parts.

FIGURE 3.1
SP16 Sampler Parts

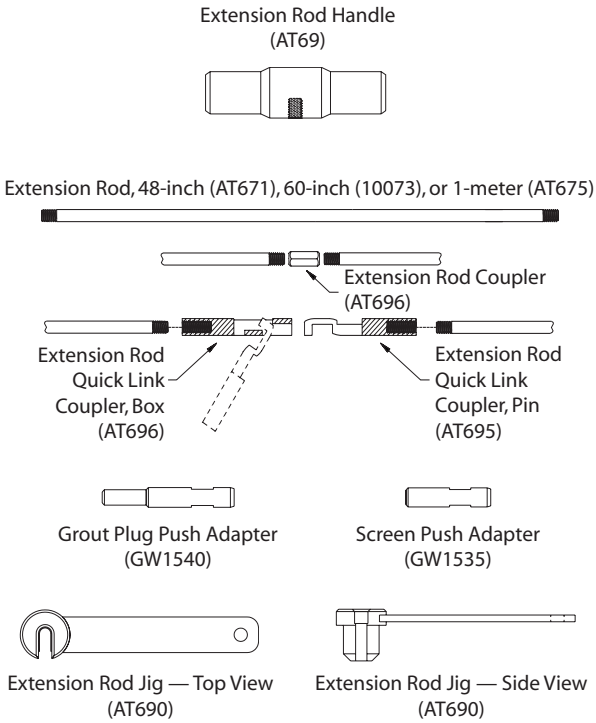

FIGURE 3.2
Geoprobe® Extension Rods and Accessories

4.0 OPERATION

4.1 Basic Operation

The SP16 sampler utilize a stainless steel or PVC screen which is encased in an alloy steel sampler sheath. An expendable drive point is placed in the lower end of the sheath while a drive head is attached to the top. O-rings on the drive head and expendable point provide a watertight sheath which keeps contaminants out of the system as the sampler is driven to depth.

Once the sampling interval is reached, extension rods equipped with a screen push adapter are inserted down the ID of the probe rods. The tool string is then retracted up to 44 inches (1118 mm) while the screen is held in place with the extension rods. The system is now ready for groundwater sampling. When sampling is complete, a removable plug in the bottom of the screen allows for grouting below the sampler as the tool string is retrieved.

4.2 Sampler Options

The Screen Point 15 and Screen Point 16 Groundwater Samplers are nearly identical. Subtle differences in the design of the SP16 sampler make it more durable than the earlier SP15 system. Operators of GH60-equipped machines should always utilize SP16 tooling. Operators of machines equipped with GH40 Series hammers may also choose SP16 tooling when sampling in difficult probing conditions.

A 1.75-inch OD Expendable Drive Point (17066K) and Disposable PVC Screen (16089) provide two useful options for the SP16 sampler. The 1.75-inch drive point may be used when soil conditions make it difficult to remove the sampler after driving to depth. The disposable PVC screen may be left downhole after sampling (when regulations permit) to eliminate the time required for screen decontamination.

4.3 Decontamination

In order to collect representative groundwater samples, all sampler parts must be thoroughly cleaned before and after each use. Scrub all metal parts using a stiff brush and a nonphosphate soap solution. Steam cleaning may be substituted for hand-washing if available. Rinse with distilled water and allow to air-dry before assembly.

4.4 SP16 Sampler Assembly (Figure 4.1)

Part numbers are listed for a standard SP16 sampler using 1.5-inch probe rods. Refer to Page 6 for screen and drive head alternatives.

1. Place an O-ring on a steel expendable drive point (GW1555K). Firmly seat the expendable point in the necked end of a sampler sheath (15187).

2. Install a PE Grout Plug (GW1552) in the bottom end of a Wire-wound Stainless Steel Screen (GW1520). Place a GW1520R O-ring in the groove on the top end of the screen.

3. Slide the screen inside of the sampler sheath with the grout plug toward the bottom of the sampler. Ensure that the expendable point was not displaced by the screen.

4. Install a bottom O-ring (13196) on a Drive Head (18307 or 15188). Thread the drive head into the sampler sheath using an adjustable wrench if necessary to ensure complete engagement of the threads. Attach a Drive Cap (12787 or 15590) to the top of the drive head.

   NOTE: The 18307 drive head should be used whenever possible as the smaller 0.5-inch ID provides a greater material cross-section for increased durability.

Sampler assembly is complete.

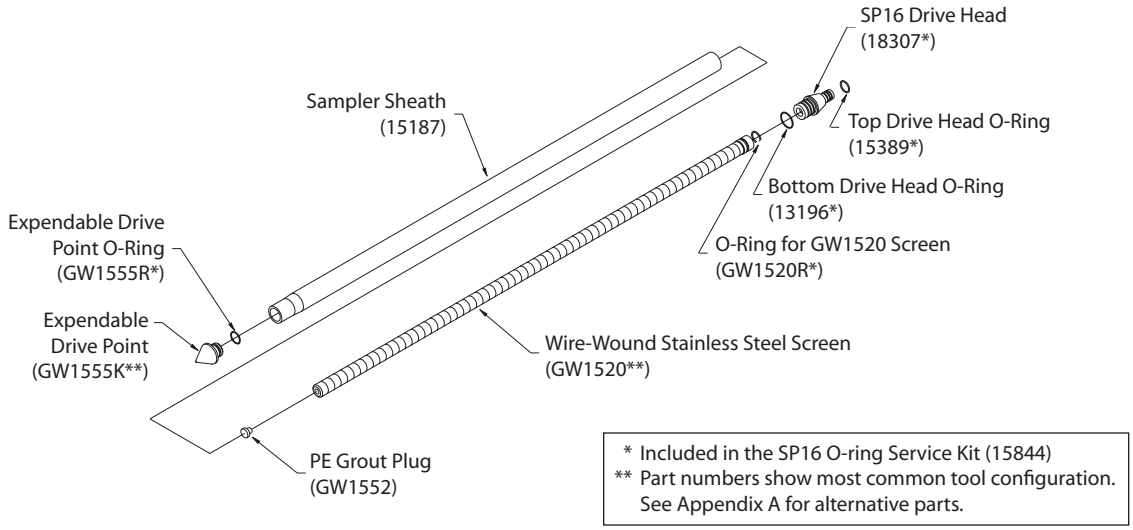

FIGURE 4.1
Screen Point 16 Groundwater Sampler Assembly

4.5 Advancing the SP16 Sampler

To provide adequate room for screen deployment with the Rod Grip Pull System, the probe derrick should be extended a little over halfway out of the carrier vehicle when positioning for operation.

1. Begin by placing the assembled sampler (Fig. 2.1.A) in the driving position beneath the hydraulic hammer of the direct push machine as shown in Figure 4.2.

2. Advance the sampler with the throttle control at slow speed for the first few feet to ensure that the sampler is aligned properly. Switch to fast speed for the remainder of the probe stroke.

3. Completely raise the hammer assembly. Remove the drive cap and place an O-ring in the top groove of the drive head. Distilled water may be used to lubricate the O-ring if needed.

   Add a probe rod (length to be determined by operator) and reattach the drive cap to the rod string. Drive the sampler the entire length of the new rod with the throttle control at fast speed.

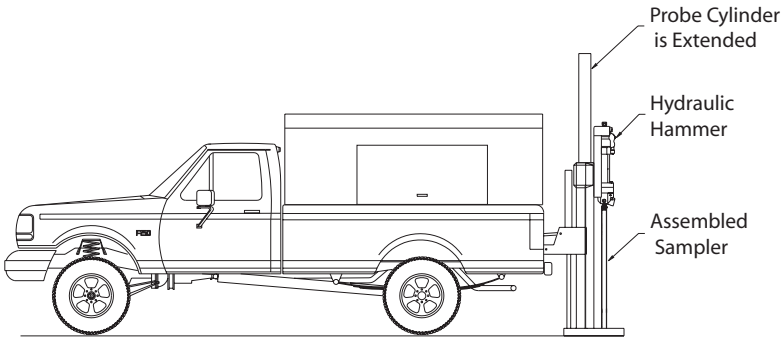

FIGURE 4.2
Screen Point 16 Groundwater Sampler in Driving Position

4. Repeat Step 3 until the desired sampling interval is reached. Approximately 12 inches (305 mm) of the last probe rod must extend above the ground surface to allow attachment of the puller assembly. A 12-inch (305 mm) rod may be added if the tool string is over-driven.

5. Remove the drive cap and retract the probe derrick away from the tool string.

4.6 Screen Deployment

1. Thread a screen push adapter (GW1535) on an extension rod of suitable length (AT671, 10073, or AT675). Attach a threaded coupler (AT68) to the other end of the extension rod. Lower the extension rod inside of the probe rod taking care not to drop it down the tool string. An extension rod jig (AT690) may be used to hold the rods.

2. Add extension rods until the adapter contacts the bottom of the screen. To speed up this step, it is recommended that Extension Rod Quick Links (AT695 and AT696) are used at every other rod joint.

3. Ensure that at least 48 inches (1219 mm) of extension rod protrudes from the probe rod. Thread an extension rod handle (AT69) on the top extension rod.

4. Maneuver the probe assembly into position for pulling.

5. Raise (pull) the tool string while physically holding the screen in place with the extension rods (Fig. 4.3.B). A slight knock with the extension rod string will help to dislodge the expendable point and start the screen moving inside the sheath.

   Raise the hammer and tool string about 44 inches (1118 cm) if using a GW1520 or GW1530 screen. At this point the screen head will contact the necked portion of the sampler sheath (Fig. 4.3.C.) and the extension rods will rise with the probe rods. Use care when deploying a PVC screen so as not to break the screen when it contacts the bottom of the sampler sheath.

   The Disposable Screen (16089) will extend completely out of the sheath if the tool string is raised more than 45 inches (1143 mm). Measure and mark this distance on the top extension rod to avoid losing the screen during deployment.

6. Remove the rod grip handle, lower the hammer assembly, and retract the probe derrick. Remove the top extension rod (with handle) and top probe rod. Finally, extract all extension rods.

7. Groundwater samples can now be collected with a mini-bailer, peristaltic or vacuum pump, tubing bottom check valve assembly, bladder pump, or other acceptable small diameter sampling device.

   When inserting tubing or a bladder pump down the rod string, ensure that it enters the screen interval. The leading end of the tubing or bladder pump will sometimes catch at the screen head giving the illusion that the bottom of the screen has been reached. An up-and-down motion combined with rotation helps move the tubing or bladder pump past the lip and into the screen.

4.7 Abandonment Grouting for GW1520 and GW1530 Screens

The SP16 Sampler can meet ASTM D 5299 requirements for abandoning environmental wells or borings when grouting is conducted properly. A removable grout plug makes it possible to deploy tubing through the bottom of GW1520 and GW1530 screens. A GS500 or GS1000 Grout Machine is then used to pump grout into the open probe hole as the sampler is withdrawn. The following procedure is presented as an example only and should be modified to satisfy local abandonment grouting regulations.

1. Maneuver the probe assembly into position for pulling. Attach the rod grip puller to the top probe rod. Raise the tool string approximately 4 to 6 inches (102 to 152 cm) to allow removal of the grout plug.

2. Thread the Grout Plug Push Adapter (GW1540) onto an extension rod. Insert the adapter and extension rod inside the probe rod string. Add extension rods until the adapter contacts the grout plug at the bottom of the screen. Attach the handle to the top extension rod. When the extension rods are slightly raised and lowered, a relatively soft rebound should be felt as the adapter contacts the grout plug. This is especially true when using a PVC screen.

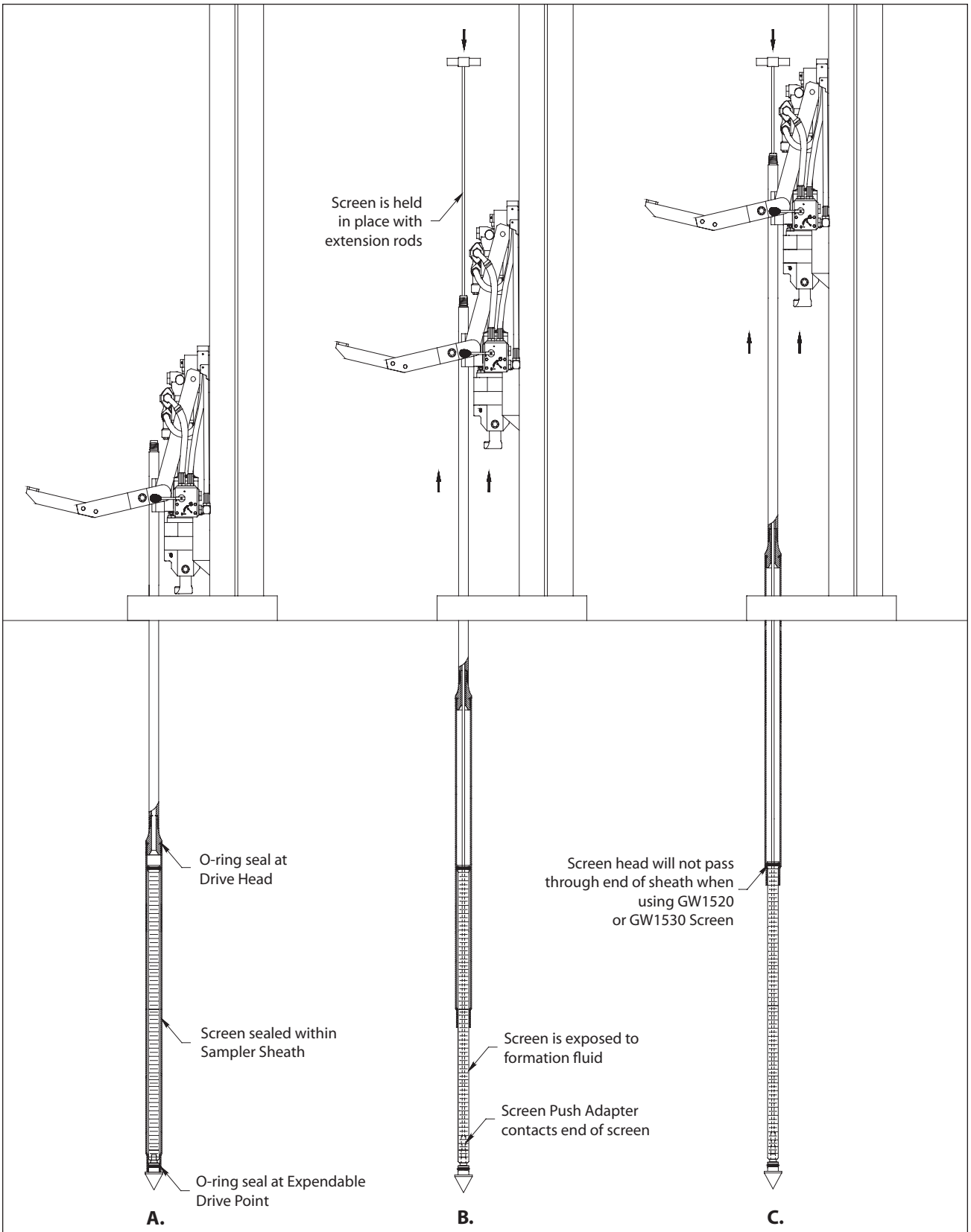

FIGURE 4.3
Screen Deployment for SP16 Sampler

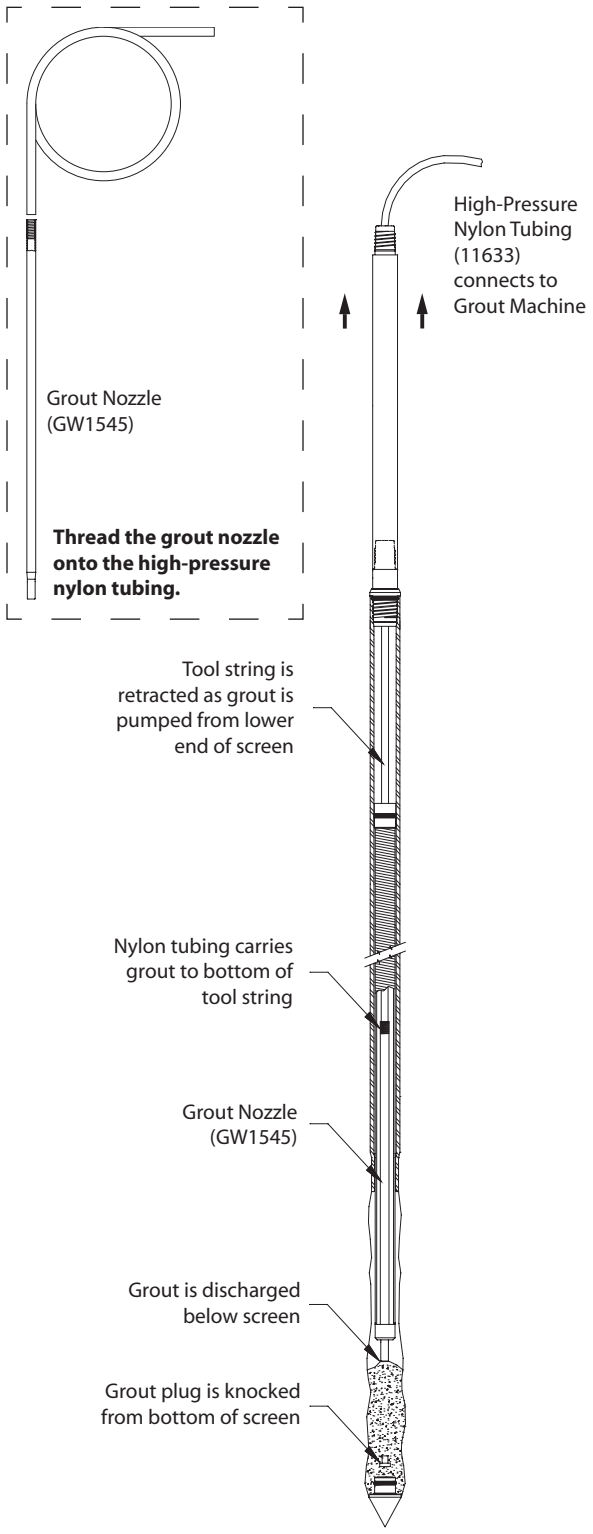

FIGURE 4.4
Grouting the SP16 Sampler With a GW1520 or GW1530 Screen

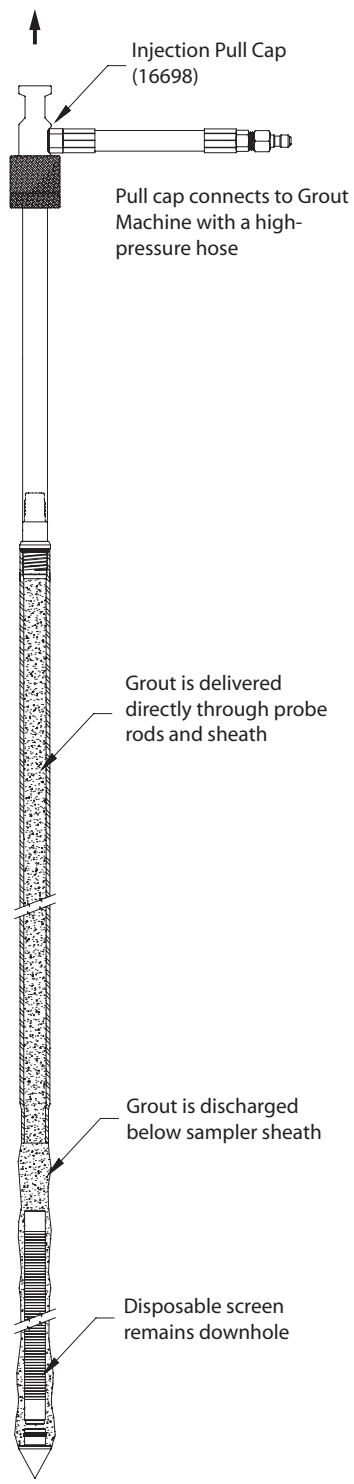

FIGURE 4.5
Grouting the SP16 Sampler With a 16089 Disposable Screen

3. Place a mark on the extension rod even with the top of the probe rod. Apply downward pressure on the extension rods and push the grout plug out of the screen. The mark placed on the extension rod should now be below the top of the probe rod. Remove all extension rods.

   Note: When working with a stainless steel screen, it may be necessary to raise and quickly lower the extension rods to jar the grout plug free. When the plug is successfully removed, a metal-on-metal sensation may be noted as the extension rods are gently "bounced" within the probe rods.

4. A Grout Nozzle (GW1545) is now connected to High-Pressure Nylon Tubing (11633) and inserted down through the probe rods to the bottom of the screen (Fig. 4.4). It may be necessary to pump a small amount of clean water through the tubing during deployment to jet out sediments that settled in the bottom of the screen. Resistance will sometimes be felt as the grout nozzle passes through the drive head. Rotate the tubing while moving it up-and-down to ensure that the nozzle has reached the bottom of the screen and is not hung up on the drive head.

   Note: *All probe rods remain strung on the tubing as the tool string is pulled. Provide extra tubing length to allow sufficient room to lay the rods on the ground as they are removed. An additional 20 feet is generally enough.*

5. Operate the grout pump while pulling the first rod with the rod grip pull system. Coordinate pumping and pulling rates so that grout fills the void left by the sampler. After pulling the first rod, release the rod grip handle, fully lower the hammer, and regrip the tool string. Unthread the top probe and slide it over the tubing placing it on the ground near the end of the tubing.

6. Repeat Step 5 until the sampler is retrieved. Do not bend or kink the tubing when pulling and laying out the probe rods. Sharp bends create weak spots in the tubing which may burst when pumping grout. Remember to operate the grout pump only when pulling the rod string. The probe hole is thus filled with grout from the bottom up as the rods are extracted.

7. Promptly clean all probe rods and sampler parts before the grout sets up and clogs the equipment.

4.8 Abandonment Grouting for the 16089 Disposable Screen

ASTM D 5299 requirements can also be met for the SP16 samplers when using the 16089 disposable screen. Because the screen remains downhole after sampling, the operator may choose either to deliver grout to the bottom of the tool string with nylon tubing or pump grout directly through the probe rods using an Injection Pull Cap (16698). A GS500 or GS1000 Grout Machine is needed to pump grout into the open probe hole as the sampler is withdrawn. The following procedure is presented as an example only and should be modified to satisfy local abandonment grouting regulations.

1. Maneuver the probe assembly into position for pulling with the rod grip puller.

2. Thread the screen push adapter onto an extension rod. Insert the adapter and extension rod inside the probe rod string. Add extension rods until the adapter contacts the bottom of the screen. Attach the handle to the top extension rod.

3. The disposable screen must be extended at least 46 inches (1168 mm) to clear the bottom of the sampler sheath. Considering the length of screen deployed in Section 4.7, determine the remaining distance required to fully extend the screen from the sheath. Mark this distance on the top extension rod.

4. Pull the tool string up to the mark on the top extension rod while holding the disposable screen in place.

   The screen is now fully deployed and the sampler is ready for abandonment grouting. Apply grout to the bottom of the tool string during retrieval using either flexible tubing (as described in Section 4.7) or an injection pull cap (Fig. 4.5). This section continues with a description of grouting with a pull cap.

5. Remove the rod grip handle and maneuver the probe assembly directly over the tool string. Thread an Injection Pull Cap (16698) onto the top probe rod and close the hammer pull latch over the top of the pull cap.

6. Connect the pull cap to a Geoprobe® grout machine using a high-pressure grout hose.

7. Operate the pump to fill the entire tool string with grout. When a sufficient volume has been pumped to fill the tool string, begin pulling the rods and sampler while continuing to operate the grout pump. Considering the known pump volume and sampler cross-section, time tooling withdrawal to slightly "overpump" grout into the subsurface. This will ensure that all voids are filled during sampler retrieval.

   The grouting process can lubricate the probe hole sufficiently to cause the tool string to slide back downhole when disconnected from the pull cap. Prevent this by withdrawing the tool string with the rod grip puller while maintaining a connection to the grout machine with the pull cap.

4.9 Retrieving the Screen Point 16 Sampler

If grouting is not required, the Screen Point 16 Sampler can be retrieved by pulling the probe rods as with most other Geoprobe® applications. The Rod Grip Pull System should be used for this process as it allows the operator to remove rods without completely releasing the tool string. This avoids having the probe rods fall back downhole when released during the pulling procedure. A standard Pull Cap (15164) may still be used if preferred. Refer to the Owner's Manual for your Geoprobe® direct push machine for specific instructions on pulling the tool string.

5.0 REFERENCES

American Society of Testing and Materials (ASTM), 2003. D6771-02 Standard Practice for Low-Flow Purging and Sampling for Wells and Devices Used for Ground-Water Quality Investigations. ASTM, West Conshocken, PA. (www.astm.org)

American Society of Testing and Materials (ASTM), 1993. ASTM 5299 *Standard Guide for Decommissioning of Groundwater Wells, Vadose Zone Monitoring Devices, Boreholes, and Other Devices for Environmental Activities.* ASTM West Conshohocken, PA. (www.astm.org)

Geoprobe Systems®, 2003, *Tools Catalog, V.6.*

Geoprobe Systems®, 2006, *Model MB470 Mechanical Bladder Pump Standard Operating Procedure (SOP), Technical Bulletin No. MK3013.*

Puls, Robert W., and Michael J. Barcelona, 1996. Ground Water Issue: Low-Flow (Minimal Drawdown) Ground Water Sampling Procedures. EPA/540/S-95/504. April.

U.S. Environmental Protection Agency (EPA), 2003. Environmental Technology Verification Report: Geoprobe Inc., Mechanical Bladder Pump Model MB470. Office of Research and Development, Washington, D.C. EPA/600R-03/086. August.

Appendix A
ALTERNATIVE PARTS

The following parts are available to meet unique soil conditions. See section 3.0 for a complete listing of the common tool configurations for the Geoprobe® Screen Point 16 Groundwater Sampler.

SP16 Sampler Parts and Accessories	**Part Number**
SP16 Drive Head, 0.625-inch bore, 1.5-inch rods	15188
Expendable Drive Points, aluminum, 1.625-inch OD (Pkg. of 25)	GW1555ALK
Expendable Drive Points, steel, 1.75-inch OD (Pkg. of 25)	17066K
Screen, PVC, 10-Slot	GW1530
Screen, Disposable, PVC, 10-Slot	16089

Groundwater Purging and Sampling Accessories	**Part Number**
Polyethylene Tubing, 0.25-inch OD, 500 ft.	TB17L
Polyethylene Tubing, 0.5-inch OD, 500 ft.	TB37L
Polyethylene Tubing, 0.625-inch OD, 50 ft.	TB50L
Check Valve Assembly, 0.25-inch OD Tubing	GW4240
Check Valve Assembly, 0.5-inch OD Tubing	GW4220
Check Valve Assembly, 0.625-inch OD Tubing	GW4230
Water Level Meter, 0.375-inch OD Probe, 100-ft. cable	GW2001
Water Level Meter, 0.438-inch OD Probe, 200-ft. cable	GW2002
Water Level Meter, 0.375-inch OD Probe, 200-ft. cable	GW2003
Water Level Meter, 0.438-inch OD Probe, 30-m cable	GW2005
Water Level Meter, 0.438-inch OD Probe, 60-m cable	GW2007
Water Level Meter, 0.375-inch OD Probe, 60-m cable	GE2008

Grouting Accessories	**Part Number**
Grout Machine, auxiliary-powered	GS500

Probe Rods, Extension Rods, and Accessories	**Part Number**
Probe Rod, 1.5-inch x 1-meter	17899
Probe Rod, 1.5-inch x 48-inch	13359
Drive Cap, 1.5-inch rods (for GH40 Series Hammer)	15590
Rod Grip Pull Handle, 1.5-inch Probe Rods (for GH40 Series Hammer)	GH1555
Extension Rod, 48-inch	AT671
Extension Rod, 1-meter	AT675

Equipment and tool specifications, including weights, dimensions, materials, and operating specifications included in this brochure are subject to change without notice. Where specifications are critical to your application, please consult Geoprobe Systems®.

Geoprobe Systems®

A DIVISION OF KEJR, INC.

Corporate Headquarters
601 N. Broadway • Salina, Kansas 67401
1-800-GEOPROBE (1-800-436-7762) • Fax (785) 825-2097
www.geoprobe.com